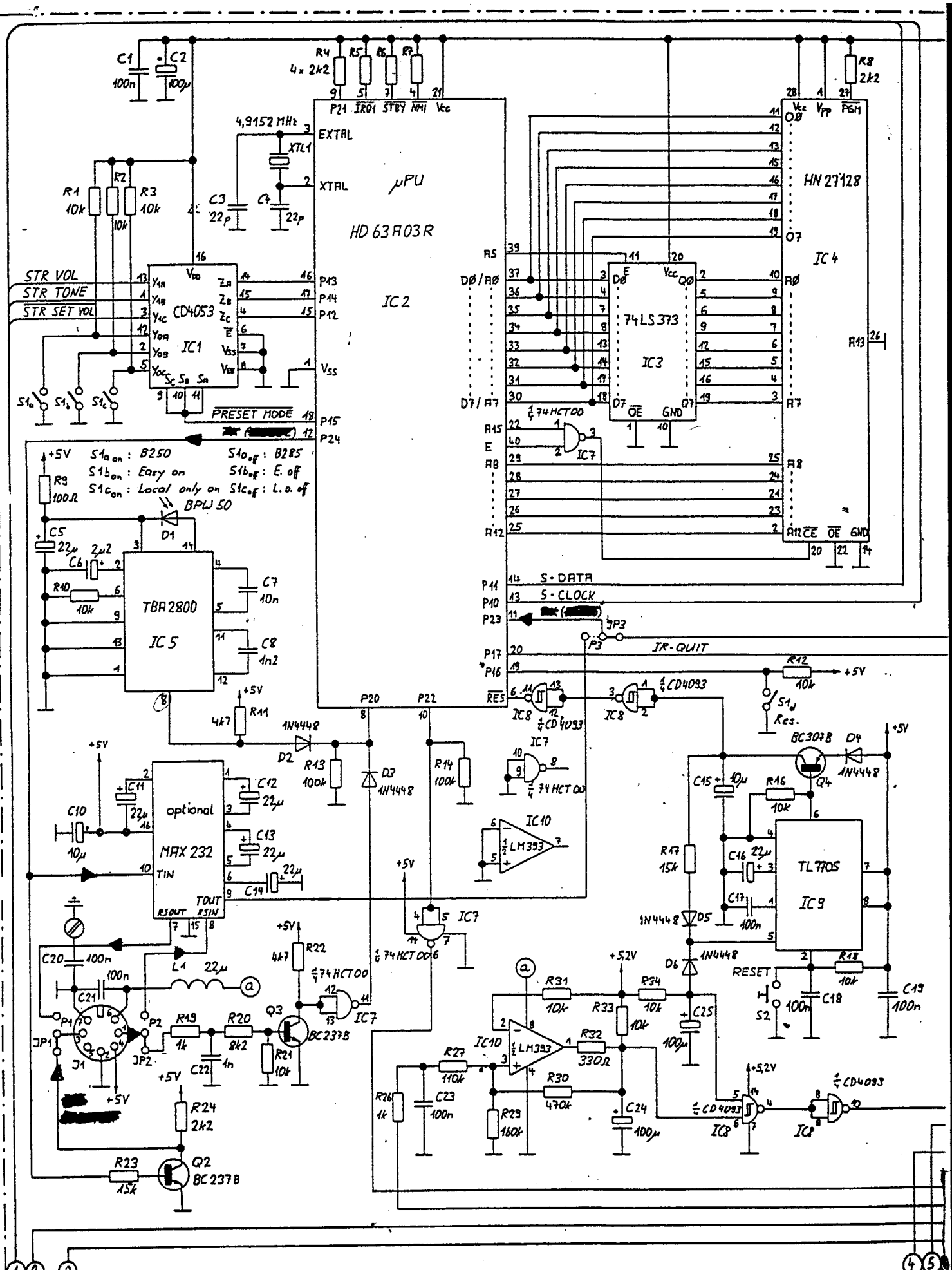


| | | | |
|---|---|---|---|
| 0 19.06.89 | | | |
| | SUB-CONTROLLER B209 - BOARD | | PAGE 1 OF 6 |
| STUDER | SUB-CONTROLLER B209 | SC | 1.085.321-22 |

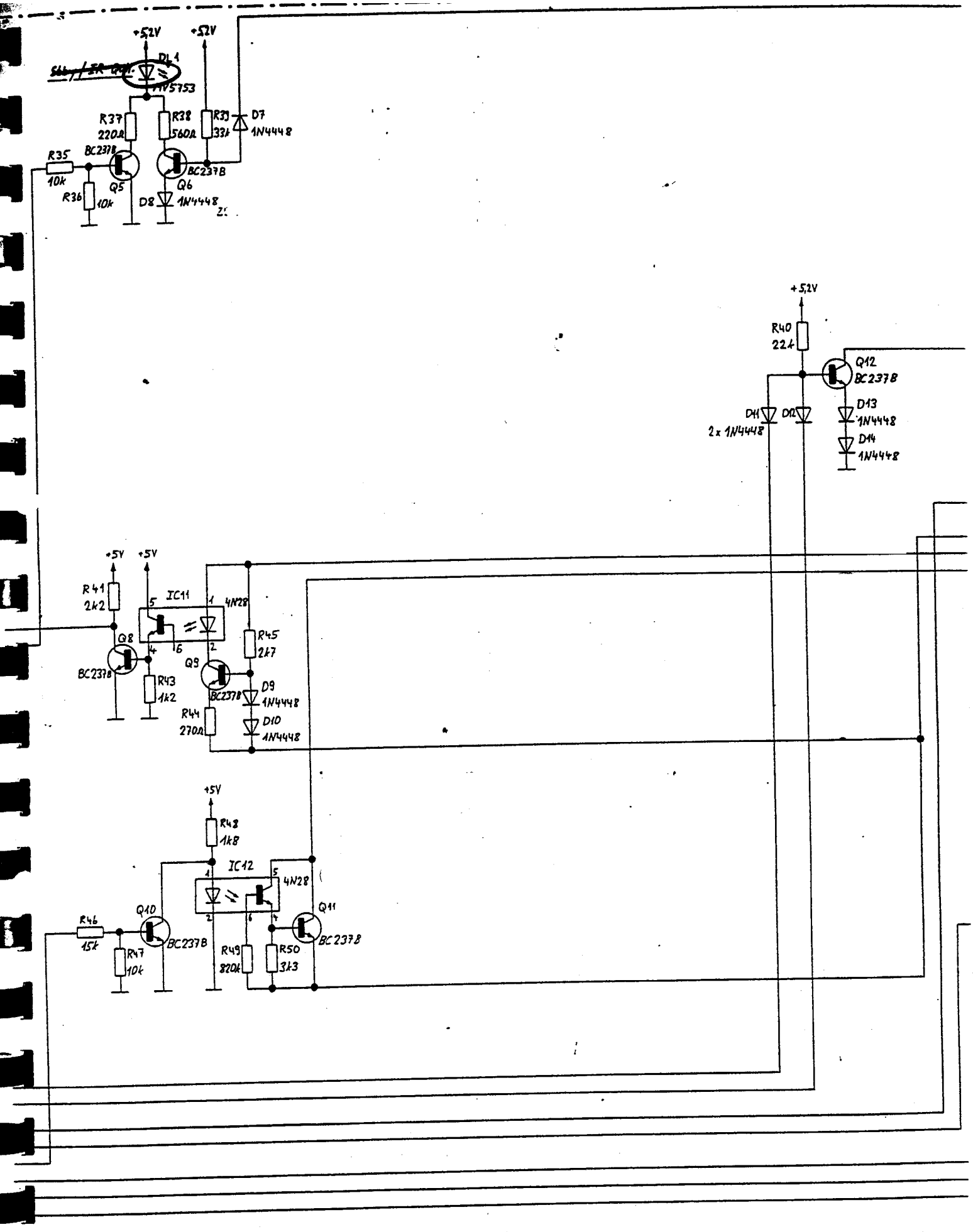


| | | | |
|---|---|---|---|
| 0 19.06.89 | | | PAGE 2 OF 6 |
| | SUB-CONTROLLER B209 - BOARD | | |
| STUDER | SUB-CONTROLLER B209 | SC | 1.085.321-22 |

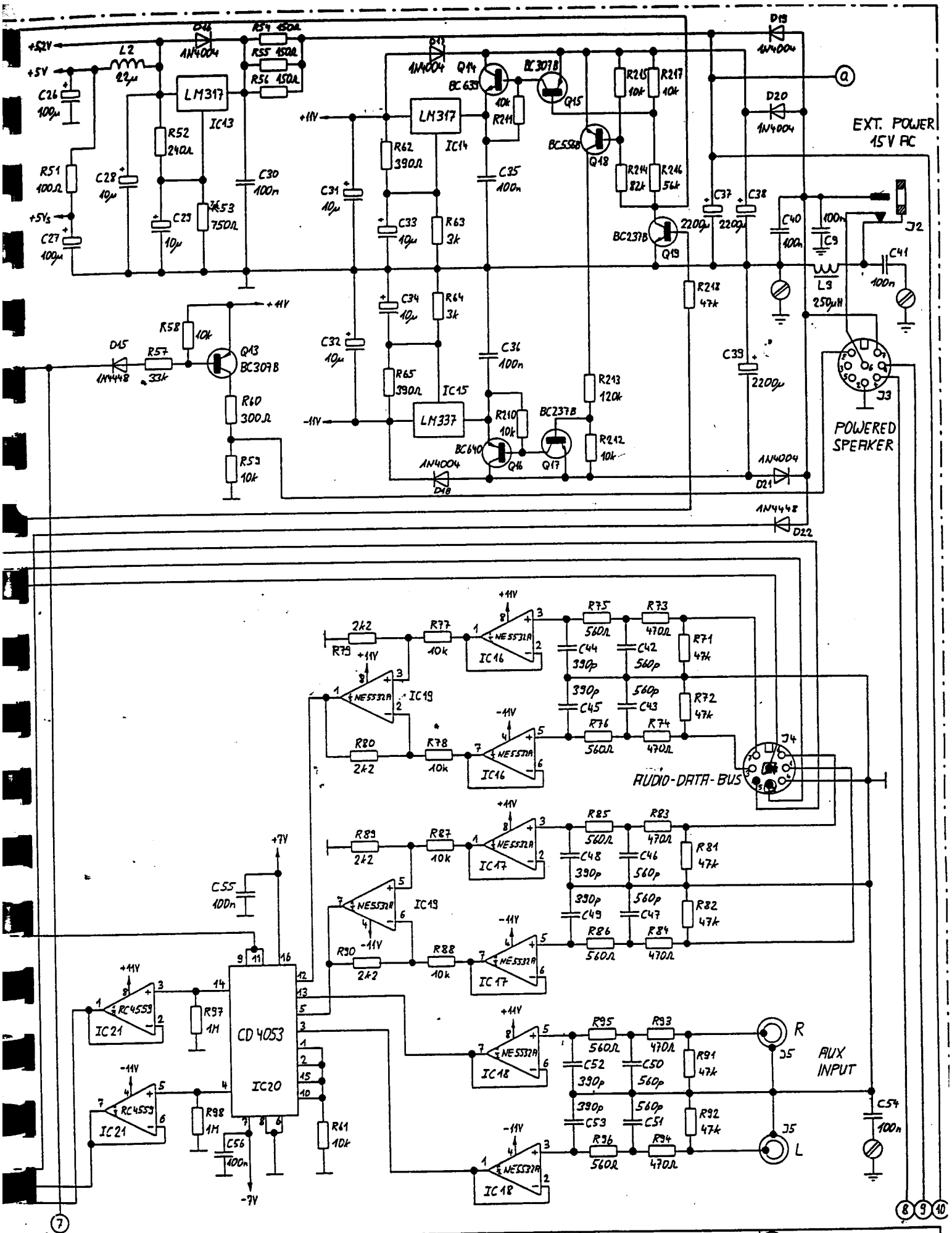


| | | | |
|---|---|---|---|
| 0 19.06.89 | | | PAGE 3 OF 6 |
| | SUB-CONTROLLER B209 - BOARD | | |
| STUDER | SUB-CONTROLLER B209 | SC | 1.085.321-22 |

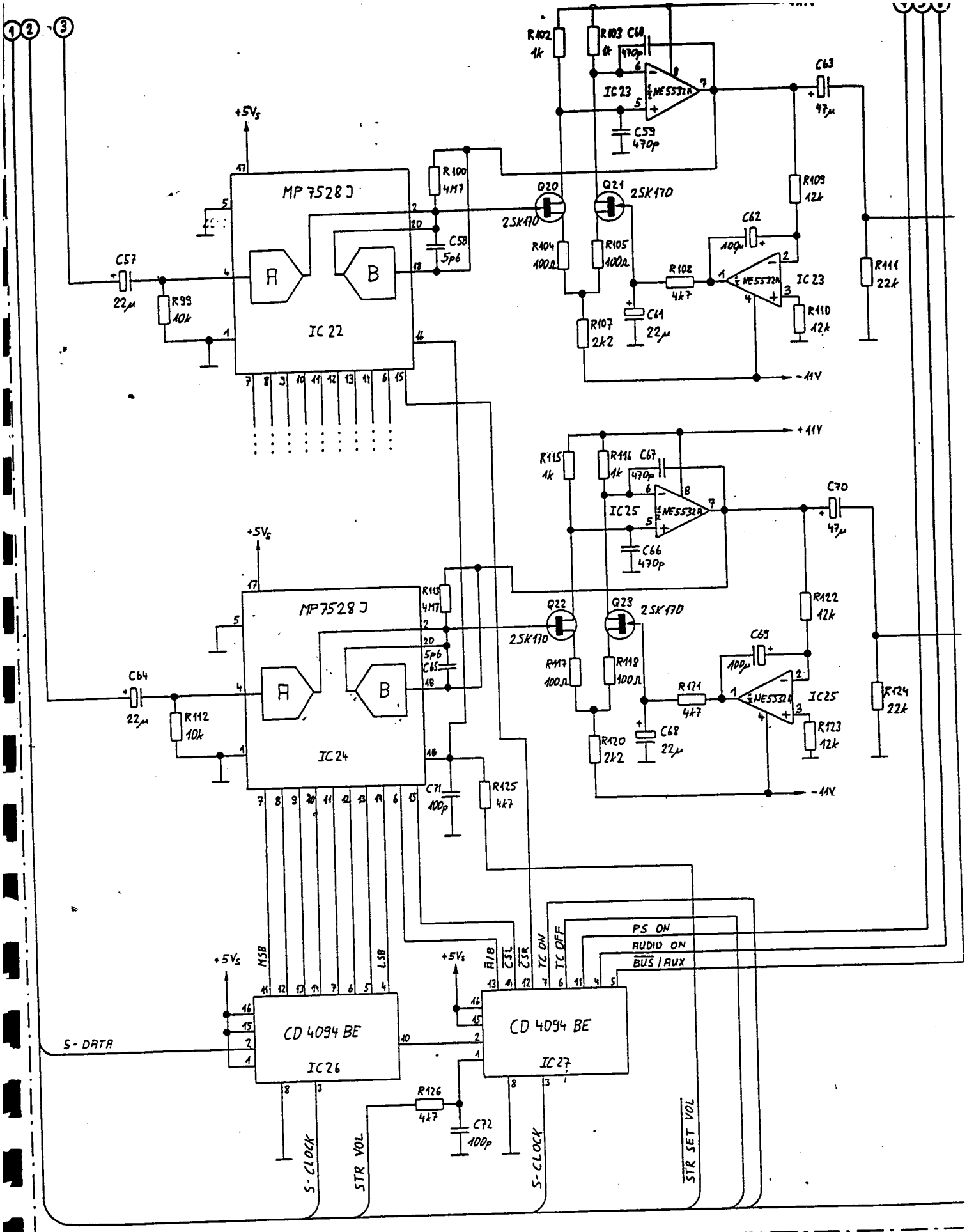


| | | | |
|---|---|---|---|
| 0 19.06.89 | | | PAGE 4 OF 6 |
| | SUB-CONTROLLER B209 - BOARD | | |
| STUDER | SUB-CONTROLLER B209 | SC | 1.085.321-22 |

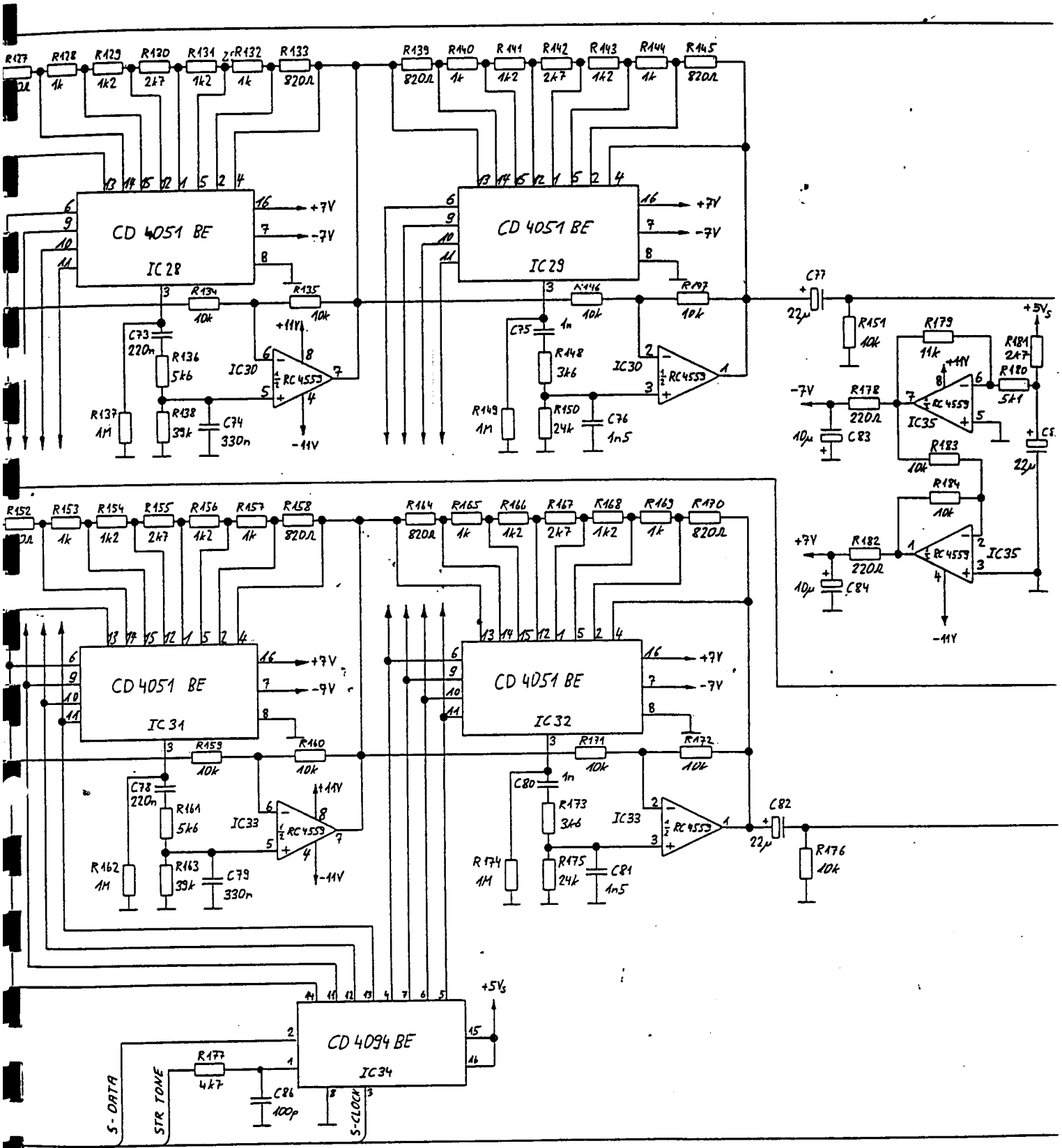


| | | | | |
|---|---|---|---|---|
| 0 19.06.89 ST | | | | |
| | SUB-CONTROLLER B209 - BOARD | | PAGE 5 OF 6 | |
| STUDER | SUB-CONTROLLER B209 | SC | 1.085.321-22 | |

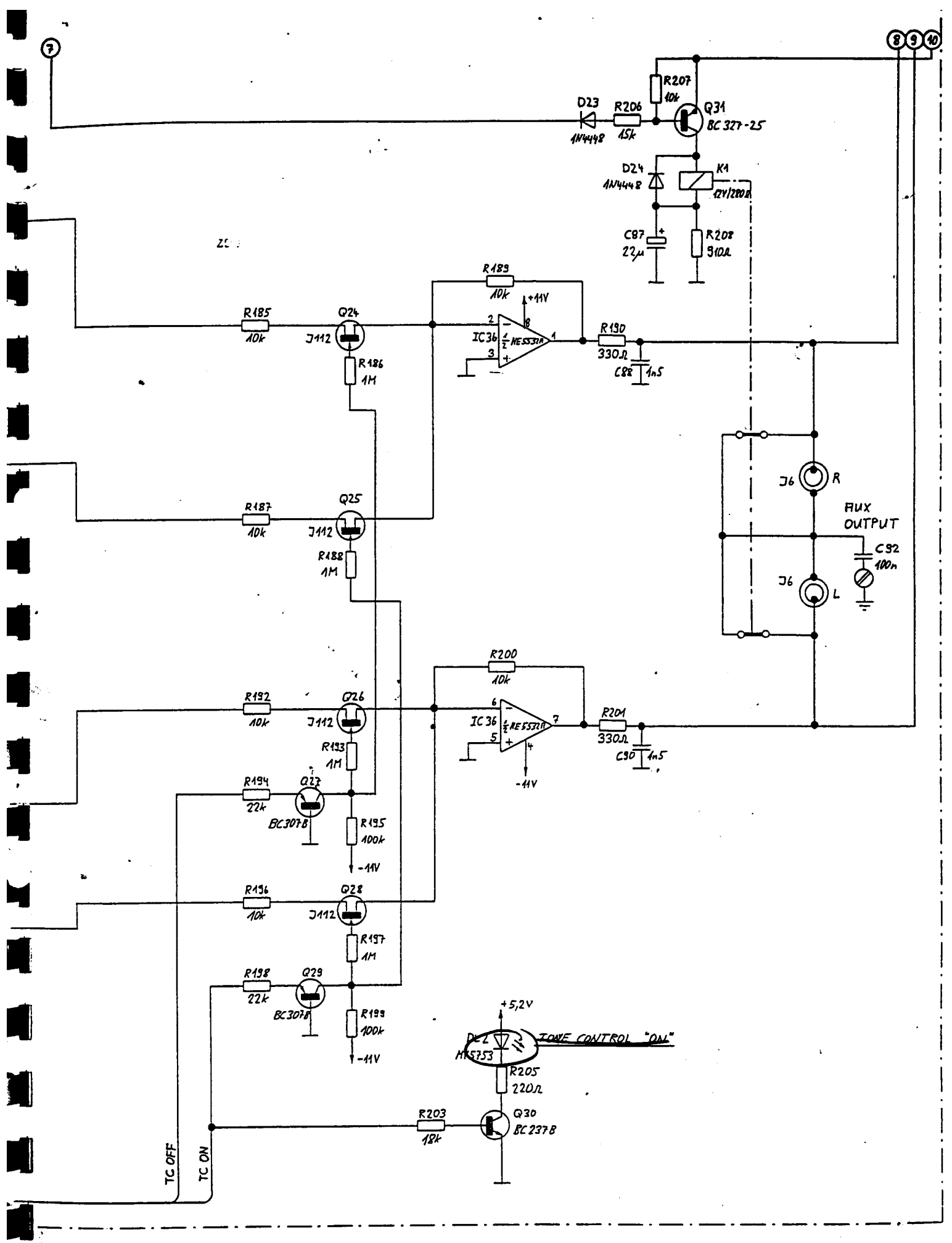


| | | | |
|---|---|---|---|
| 0 19.06.89 | | | |
| | SUB-CONTROLLER B209 - BOARD | | PAGE 6 OF 6 |
| STUDER | SUB-CONTROLLER B209 | SC | 1.085.321-22 |

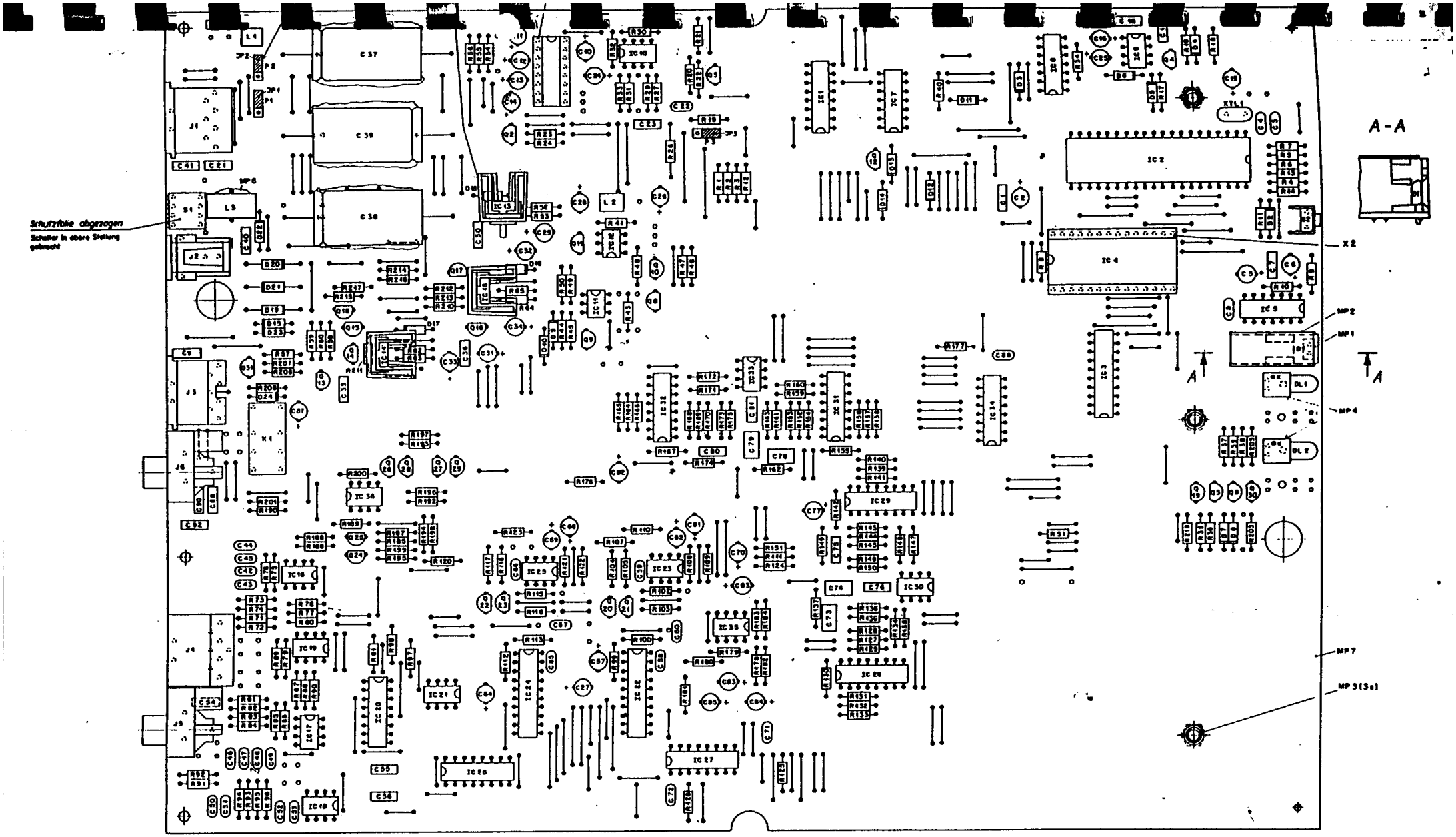


31, 33, 34

Schilder 1.085.321-02 / 43.01.0108 / L 101.001-22
aufgeklebt nach Produktionsmuster.

| | | | |
|---|---|---|---|
| Zugehörige Unterlagen | Freigabeformat | Maßstab | 6.9.89 |
| PL | | 2:1 | |
| Ersetzt für | Ersetzt durch | | Ersetzt für |

STUDER REVOX GROUP ZURICH

SUB-CONTROLLER B209
BOARD ESE

1.085.321-23