SAMSUNG

3 CD CHANGER MINI COMPONENT SYSTEM

MAX-445/455

SERVICE Manual

3CD CHANGER MINI COMPONENT

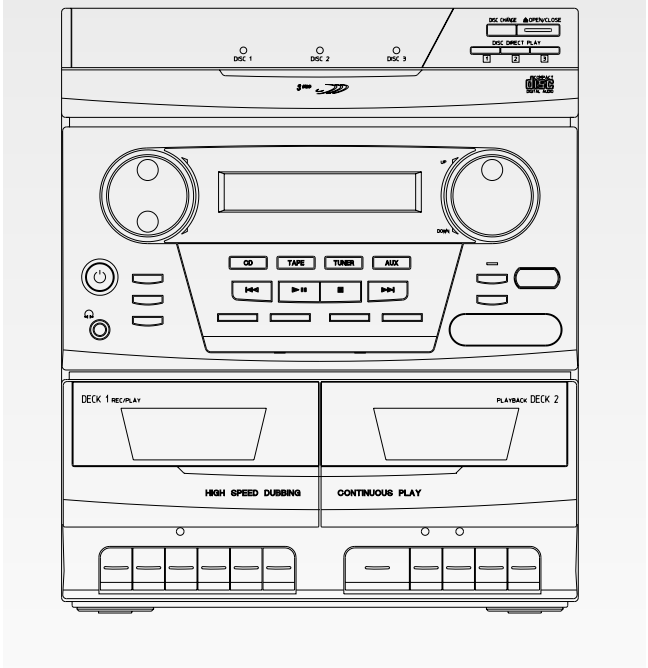

CONTENTS

1. Precautions
2. Specifications
3. Disassembly and Reassembly
4. Alignment and Adjustments
5. Special Circuit Descriptions
6. Troubleshooting
7. Exploded Views and Parts List
8. Electrical Parts List
9. Block Diagrams
10. PCB Diagrams
11. Wiring Diagram
12. Schematic Diagrams

© Samsung Electronics Co., Ltd. Dec. 1996.

Code No. AH68-20144A

4. Alignment and Adjustments

4-1 Tuner

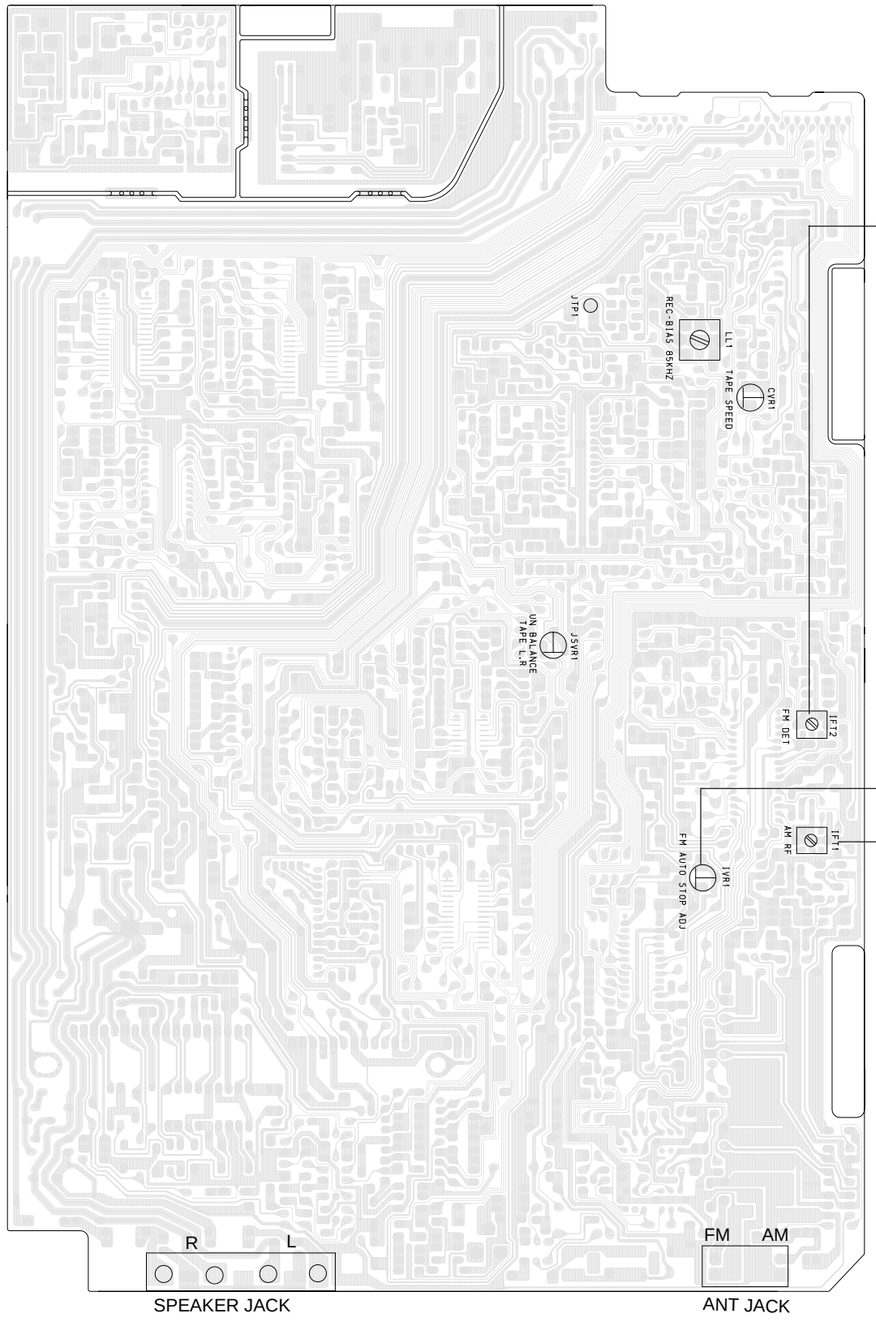

FM T.H.D Adjustment	
SSG FREQ.	98MHz
Adjustment point (IFT2)	FM DETECTOR COIL
Minumum Distortion(Figure 4-1)	

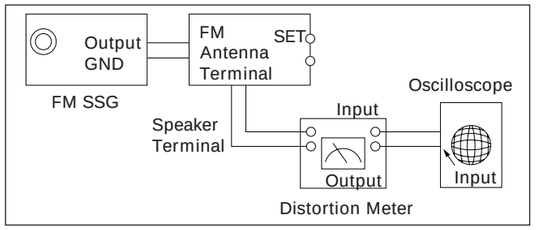

Figure 4-1 IF CENTER and T.H.D Adjustment

FM Search Level Adjustment	
SSG FREQ.	98MHz
Adjustment point (IVR1)	SEMI-VR(5KB)
"TUNED" is shown on FLT(Figure 4-2)	

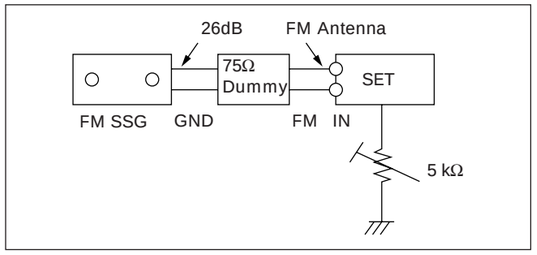

Figure 4-2 FM Auto Search Level Adjustment

AM(MW) I.F Adjustment	
SSG FREQ.	450KHz
Adjustment point (IFT1)	AM I.F COIL
Maximum output(Figure 4-3)	

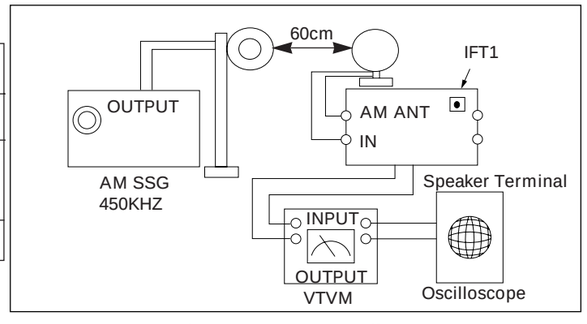

Figure 4-3 AM I.F Adjustment

4-2 Cassette Deck

4-2-1 Test Equipment

1. Oscilloscope
2. VTVM

4-2-1(a) TAPE

1. MTT-111 (or equivalent) : Test tape on which 3KHz signal is recorded (Tape speed adjustmant)
2. MTT-5512 (or equivalent)
3. MTT-113CN (or equivalent) : Test tape on which 8KHz signal is recorded (Azimuth)
4. MTT-112B (or equivalent) : Test tape on which 1KHz signal is recorded (L.R. channel unbalance)

4-2-2 Location of Adjustment Points (Refer to page 4-1)

4-2-3 Adjustment Procedure

4-2-3(a) TAPE SPEED

Item	Connection	Preparation	Adjustment Point	Remark
Tape speed (normal speed) adjustment	Figure 4-4	1) Insert MTT-111 to Deck 2. 2)Press PLAY button.	CVR1	3 KHz
Tape speed (high speed)	Figure 4-4	1) Insert MTT-111 to Deck 2. 2) Insert MTT-5512 to Deck1. 3) Press Hi-SPEED button. 4) Press RECORD button.	—	5200Hz ~ 6600Hz

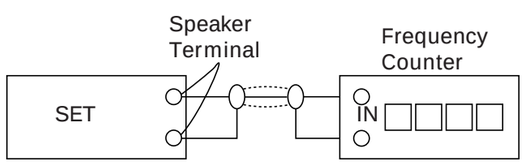

Figure 4-4

4-2-3(b) AZIMUTH

1. DECK 1

Item	Connection	Preparation	Adjustment Point	Remark
AZIMUTH	Figure 4-5	Play MTT113N in the DECK1.	Figure 4-6	Maximum output and identical phase of L,R channel. Set the screw after adjustment.
L,R unbalance	—	Play MTT112B in the DECK1.	JSVR15L	L-CH → R-CH ±0.5dB

2. DECK 2

Item	Connection	Preparation	Adjustment Point	Remark
AZIMUTH	Figure 4-5	Play MTT113N in the DECK2.	Figure 4-6	Maximum output and identical phase of L,R channel. Set the screw after adjustment.

3. Recording Frequency

Item	Connection	Preparation	Adjustment Point	Remark
Bias oscillation frequency	JPT1	Record MTT5512 in the DECK1.	LL1	85KHz

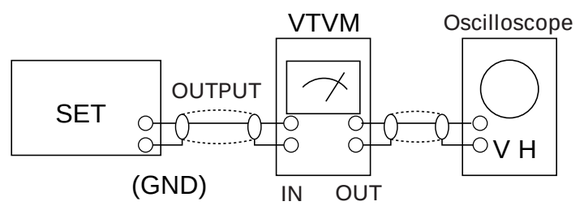

Figure 4-5

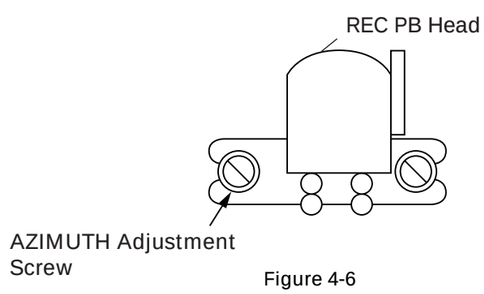

Figure 4-6

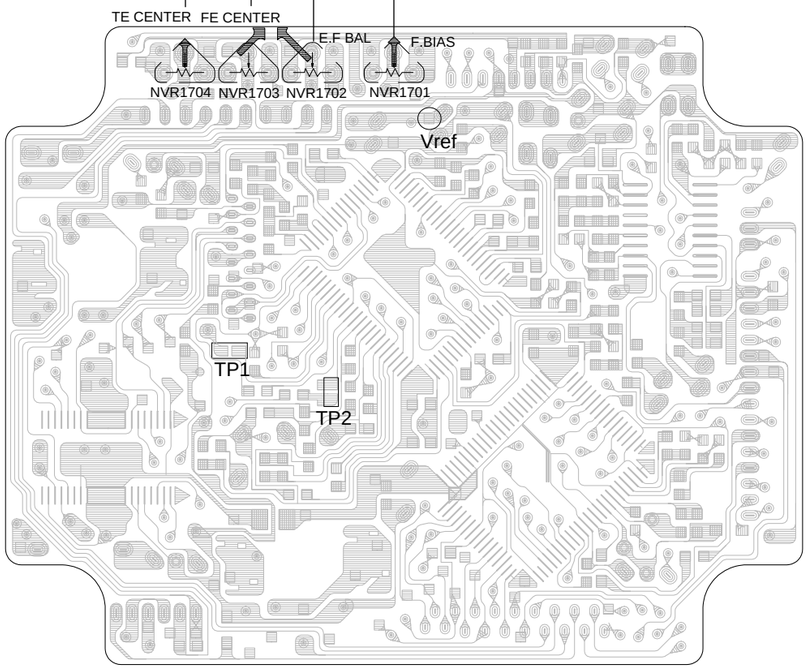

4-3-1 To Adjust FOCUS BIAS(STOP mode)

1. Set Volt/Div of the oscilloscope to DC 100mV.
2. Ground the scope input and set the waveform to 0V, DC range.
3. Connect the GND terminal of the oscilloscope to Vref, and (+) terminal to center of TP1.
4. Set NVR1701 to 0mV.

4-3-2 To Adjust Tracking Gain (PLAY mode)

1. Connect the GND terminal of the oscilloscope to Vref and (+) terminal to TP2.
2. Load and play the disc
3. While the disc is running adjust the gain with NVR1704 as shown below.

Normal frequency

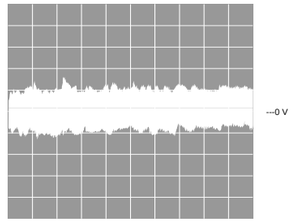

VOLT/DIV : 0.2V
TIME/DIV : 2mS

Low frequency

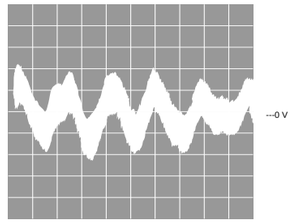

VOLT/DIV : 0.2V
TIME/DIV : 2mS

High frequency

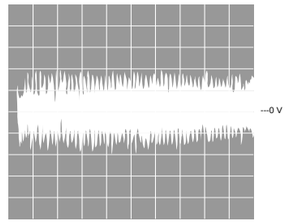

VOLT/DIV : 0.2V
TIME/DIV : 2mS

4-3-3 To Adjust Focus Gain (PLAY mode)

1. Connect the GND terminal of the oscilloscope to Vref and (+) terminal to TP1.
2. Load and play the disc
3. While the disc is running adjust the gain with NVR1703 as shown in the following figure.

Normal frequency

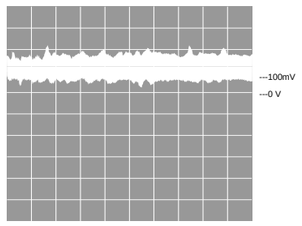

VOLT/DIV : 0.1V
TIME/DIV : 2mS

Low frequency

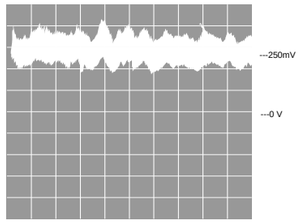

VOLT/DIV : 0.1V
TIME/DIV : 2mS

High frequency

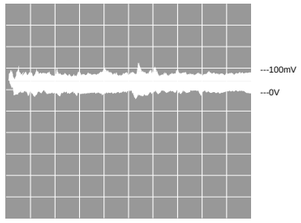

VOLT/DIV : 0.1V
TIME/DIV : 2mS

4-3-4 To Adjust E/F Balance (PLAY mode)

1. Set TIME/DIV of the oscilloscope to 2mS.
2. Set Volt/DIV of the oscilloscope to 0.5V.
3. Ground the scope input and set to DC and then set the DC range.
4. Connect the GND terminal of the oscilloscope to Vref and (+) terminal to center to TP2.
5. Load and play the disc.
6. Turn NVR1704 counterclockwise to the minimum value.
7. Raise NVR1702 and adjust the waveform so that its middle comes to GND of the oscilloscope (or until the upper half of waveform becomes symmetrical to the bottom half, A=B)
8. Adjust NVR1704 (arrow) for normal sound.

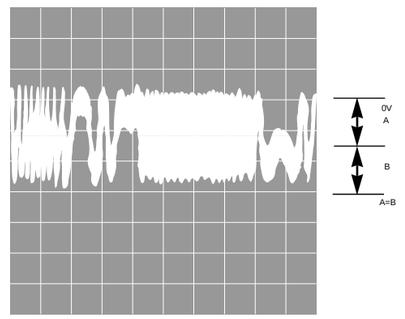

5. Special Circuit Descriptions

5-1 CD

5-1-1 RF Amp (KA9220) : NIC9220

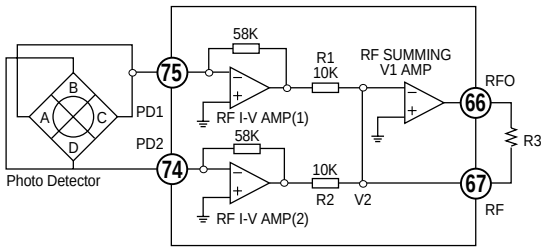

RF I-V Amp(1) and RF I-V Amp(2) currents are converted to voltage via internal resistance of 58kΩ from the current of PD1(A+C) and PD2(B+D): These voltage are added by the RF summing amplifier.
The signal (A+B+C+D) is applied to RFO (No. 2 terminal).
RF output voltage is calculated as follows :

$$V_{RF} = -R3 \times (iPD1 + iPD2)$$
$$= -R3 \times (V_1/R_1 + V_2/R_2)$$
$$= -R3 \times (\frac{V_1}{10K} + \frac{V_2}{10K})$$
$$= -\frac{R3}{10K} \times (V_1 + V_2)$$

5-1-2 FOCUS ERROR Amp(KA9220) : NIC9220

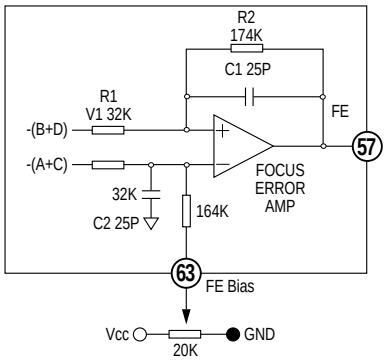

FOCUS ERROR Amp amplifies the difference between RF I-V Amp(1) output (A+C) and RF I-V Amp(2) output(B+D).
These two signals are supplied to (-) and (+) input terminals of FOCUS ERROR Amp. The FOCUS ERROR output is applied to FE (Terminal No.57).
The FE output voltage of this low frequency component varies according to {(A+C) - (B+D)}.
VFE is calculated as follows :

$V_{FE} = (R2/R1) \times (V2-V1) = 5.4(V2-V1)$

This FOCUS ERROR voltage is sent to FOCUS SERVO .

5-1-3 FOCUS SERVO SYSTEM (KA9220) : NIC9220

When FS3 is ON, high frequency gain decreases (time constant set by pin17, pin19 ; capacitor is connected to internal resistance).
The capacitor between pin 18 and GND sets the time constant to pass the low frequencies in PLAY mode.

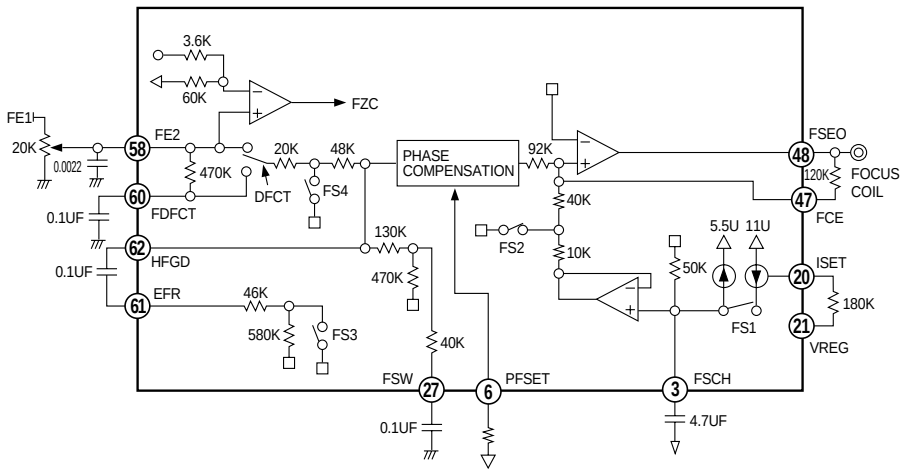

The maximum frequency of the focus phase compensation is inversely proportional to the resistance connected to pin 7. Focus search peak is about 1.1 Vp-p, and is inversely proportional to the resistance connected to pins 22,23 (if this resistance changes, the peak of track jump and sled kick change).
The inverted input of FZC comparator is set to 5.7% of the difference between Vcc and VC(pin69) {{5.7% x (Vcc-Vc)}.
Note : If the resistance connected to pin7 changes, the phase compensation peak of the focus tracking sled servos change. (The 'op-amp' dynamic range and offset voltage also change.)

5-1-4 TRACKING SLED SERVO SYSTEM (KA9220) : NIC9220

The capacitor between pin 15 and 16 attenuates high frequencies when TG2 is off. The maximum frequency of tracking phase compensation is inversely proportional to the resistance connected to pin 7 (about 1.2kHz at 470k). The tracking jump (FWD and REV) is determined when TM3 and TM4 are ON, and the peak voltage induced from the tracking coil is determined by both TM3 and TM4 currents and the feed back resistance of pin 47.
Track jump max voltage = TM3 (TM4) current x feedback resistance.

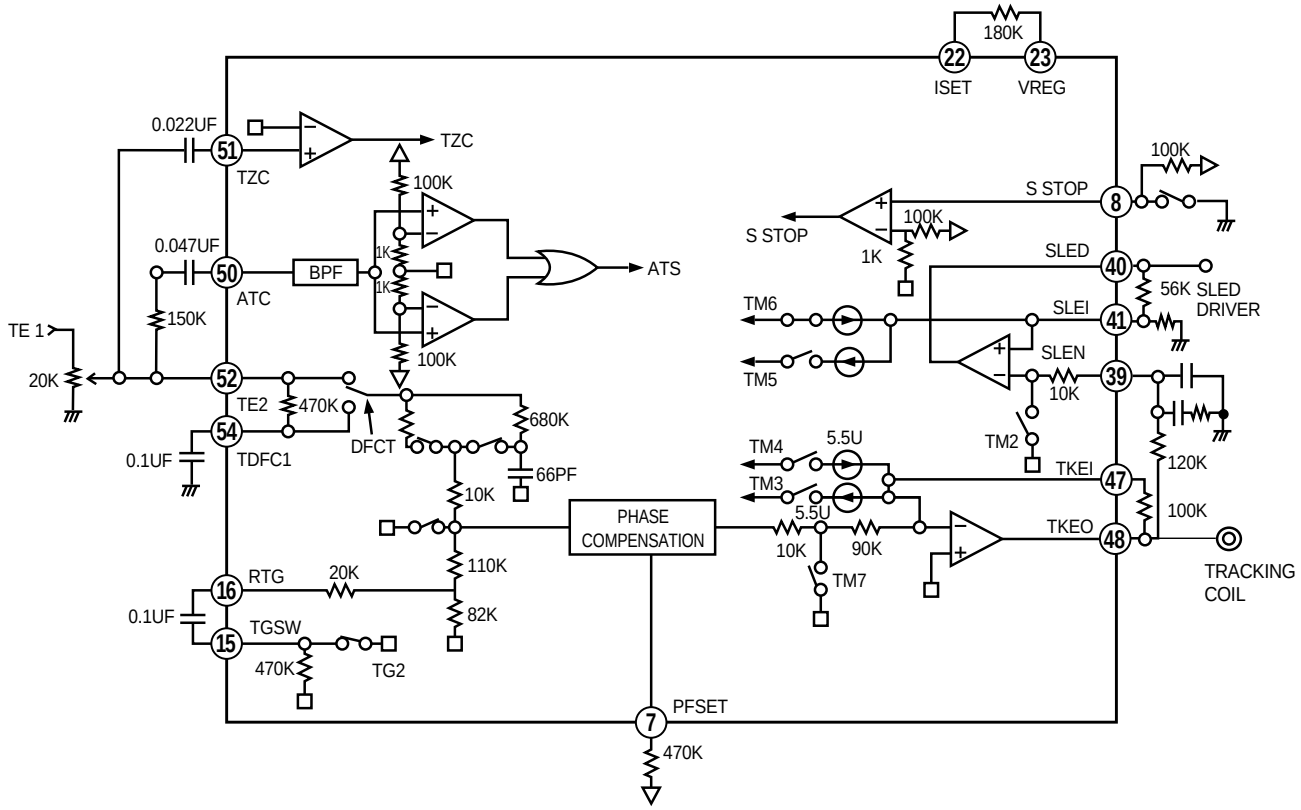

FWD or REV sled kick occurs when TM5 or TM6 is ON, and the peak voltage added to sled motor (determined by TM5 or TM6 current and the feedback resistance of pin 41.)
Sled jump max. voltage = TM5(TM6) current x feedback resistance
Each SW current is determined by the resistance connected to pin 22 and 23.
When the resistance is about 150Ω,

TM3 or TM4 = 11μA,

TM5 or TM6 = 22μA,

This current is inversely proportional to the resistor, variable within a range of t 5 to 40 μA for TM3.
STOP is the ON/OFF detection signal for the limit SW (or the sled motor's innermost cirumference).

6. Troubleshooting

6-1 Amplifier

6-1-1 Power Malfunction

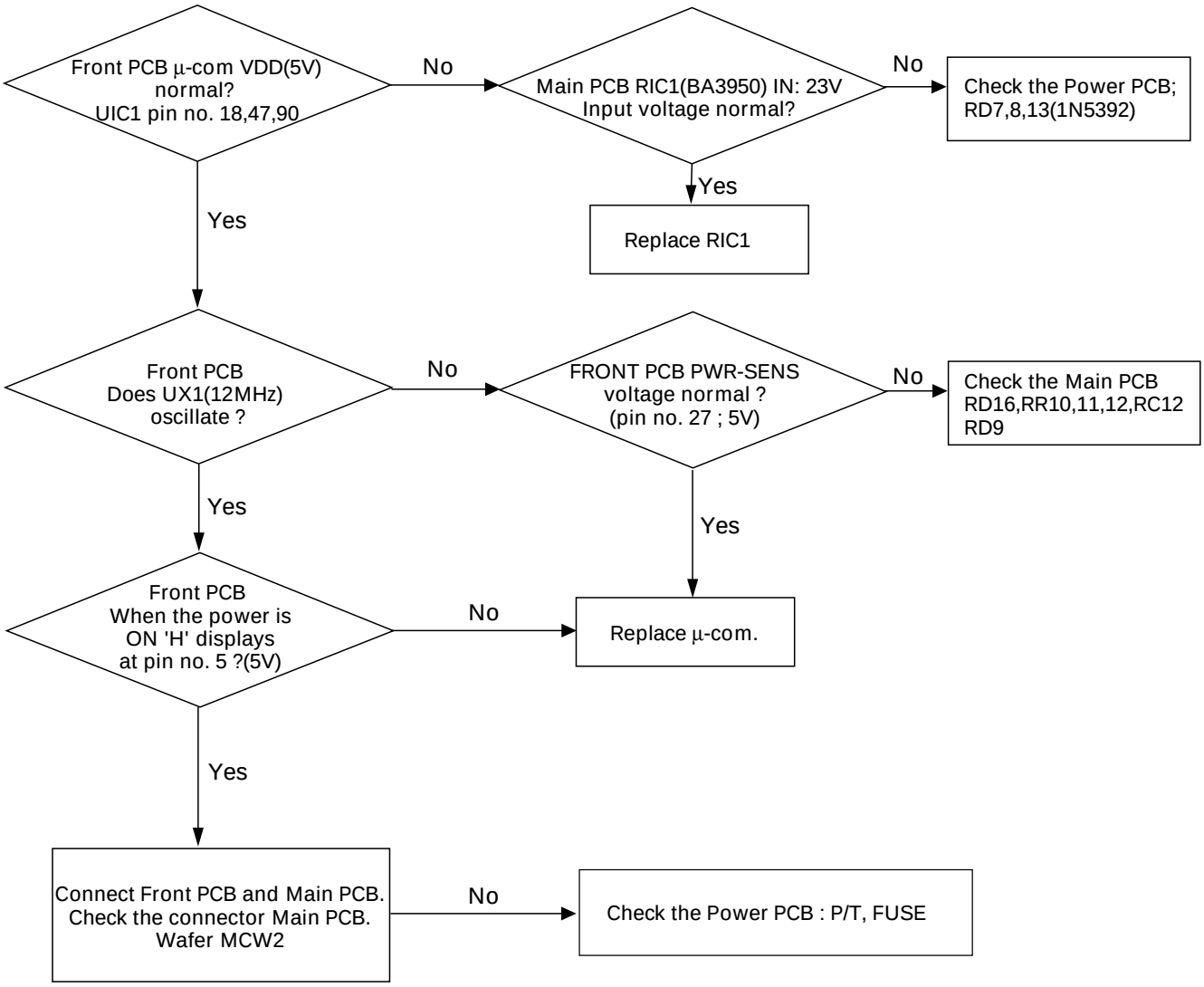

6-1-2 No Output

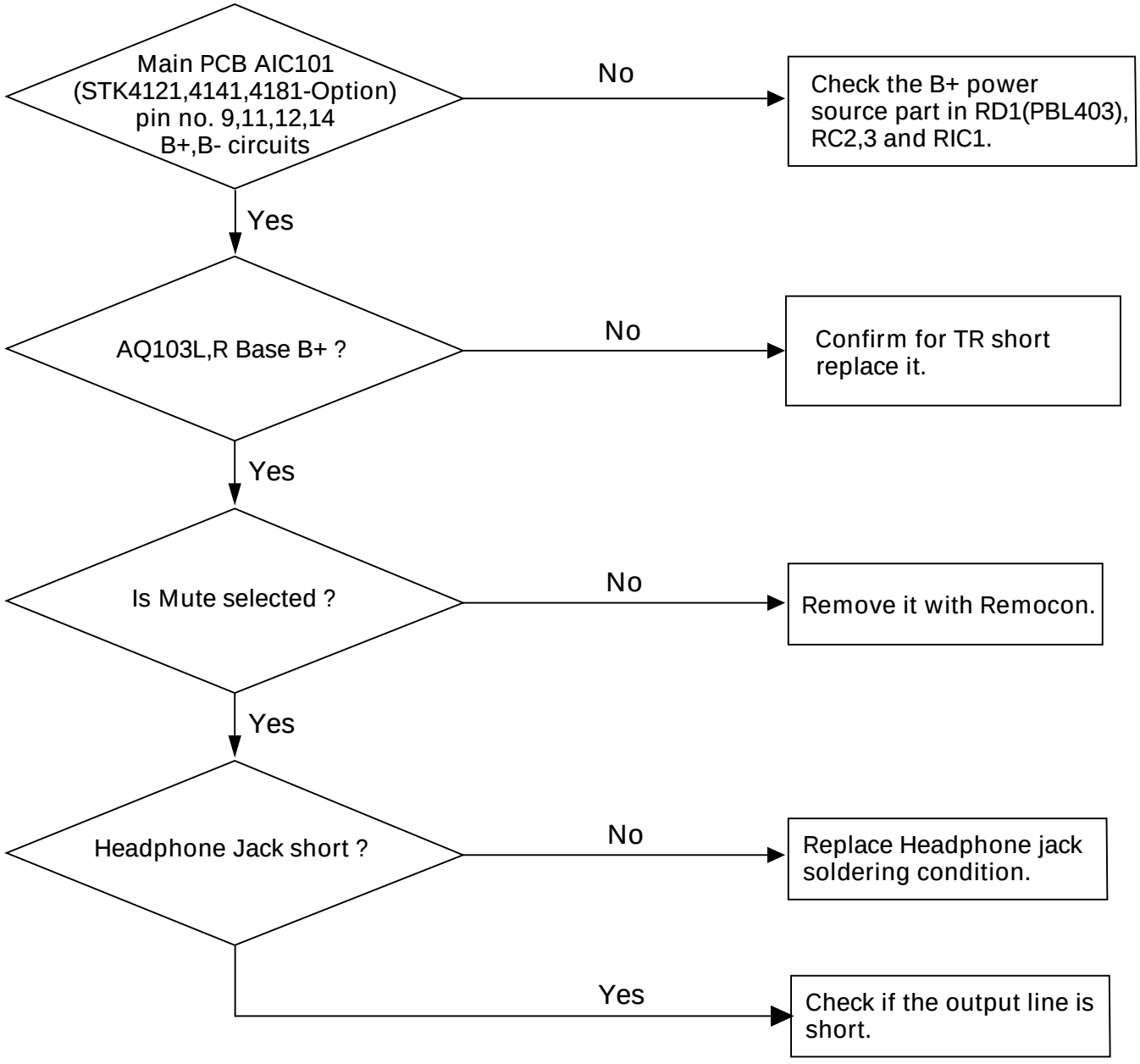

6-1-3 Tuner Malfunction (FM/AM)

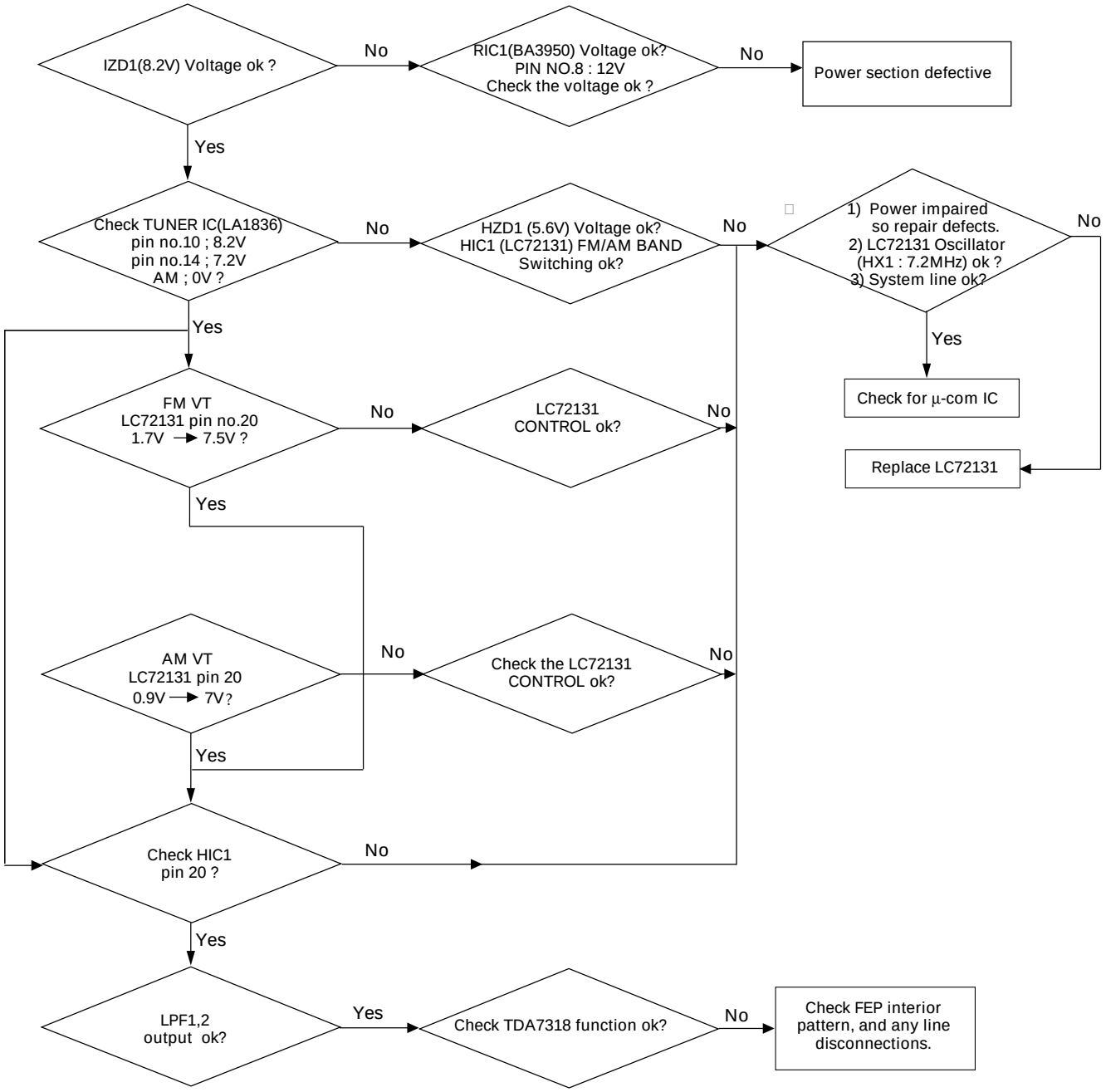

6-1-4 V.F.D Malfunction

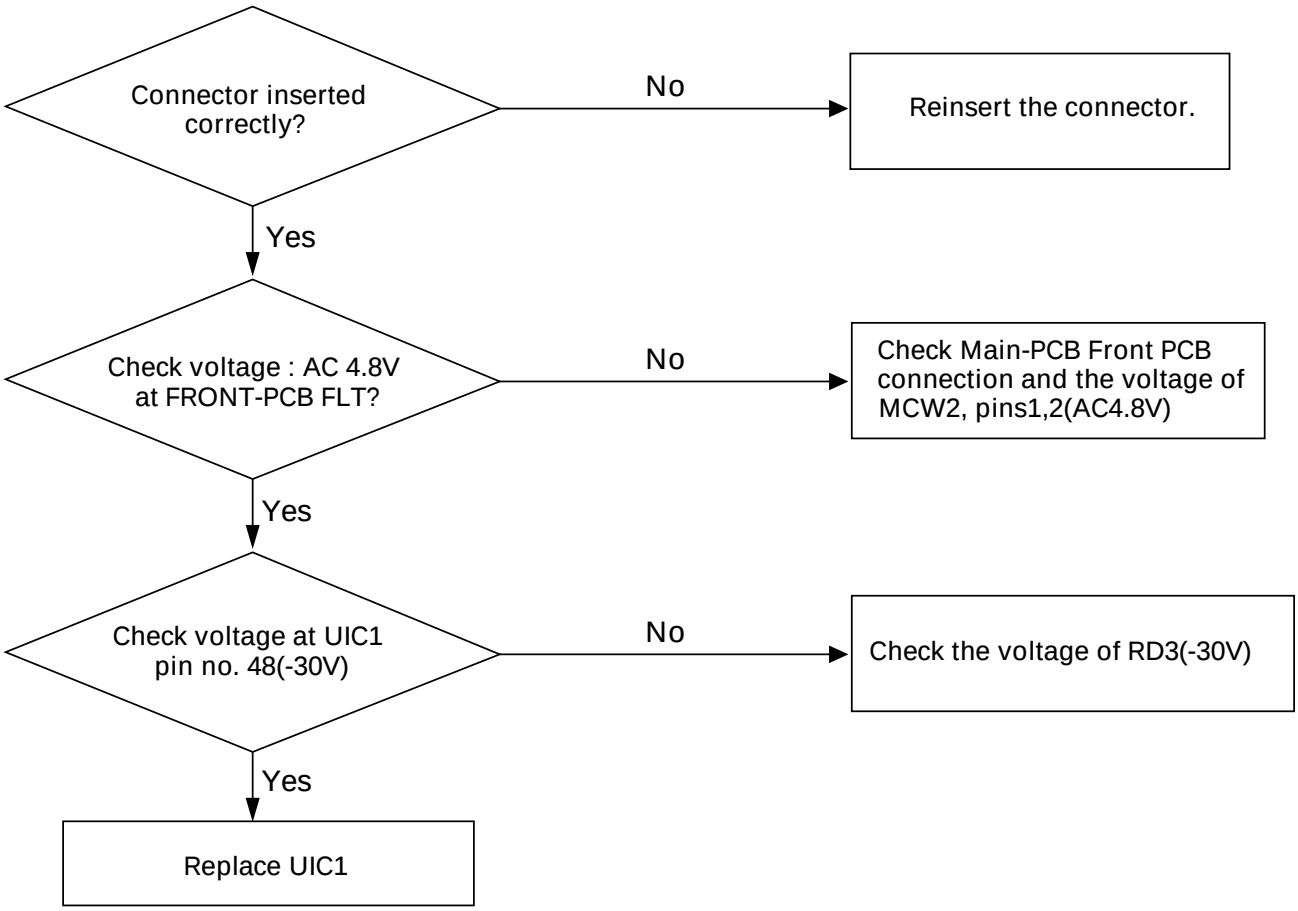

6-2 Cassette Deck

<table>
<tr><th>Block</th><th>Main Function</th><th>Check Point</th></tr>
<tr><td>TAPE IC JIC1
(KA22291)</td><td>Convert of P/B & R/P Signal</td><td>Check for voltage at pin5
1 P/B Deck : H
2 R/P Deck : L</td></tr>
<tr><td>BIAS OSC</td><td>Oscillate RECORD BIAS (85KHZ)</td><td>Check for voltage at LC2
Osc Frequency : 85kHz
When inoperative : LQ4, LQ3 check</td></tr>
<tr><td>R/P Switching</td><td>Convert of PLAY/RECORD</td><td>Check for voltage at pin no.16,8
<table><tr><th>Mode</th><th>Pin no.16,8</th></tr><tr><td>Rec.
PLAY</td><td>9V
0V</td></tr></table></td></tr>
</table>

6-3 CD

6-3-1 Disc Revolution Malfunction

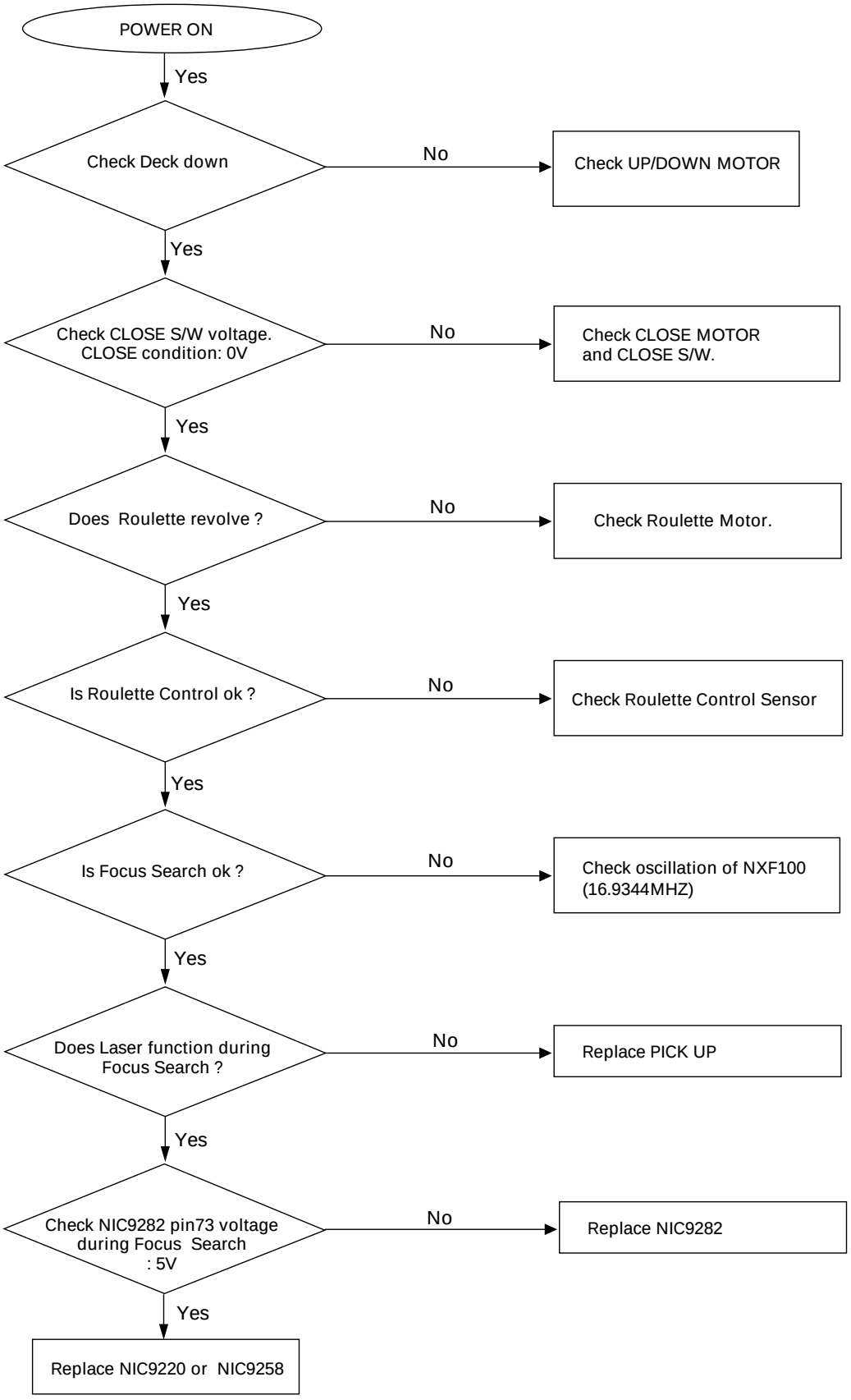

6-3-2 Audio Output Malfunction

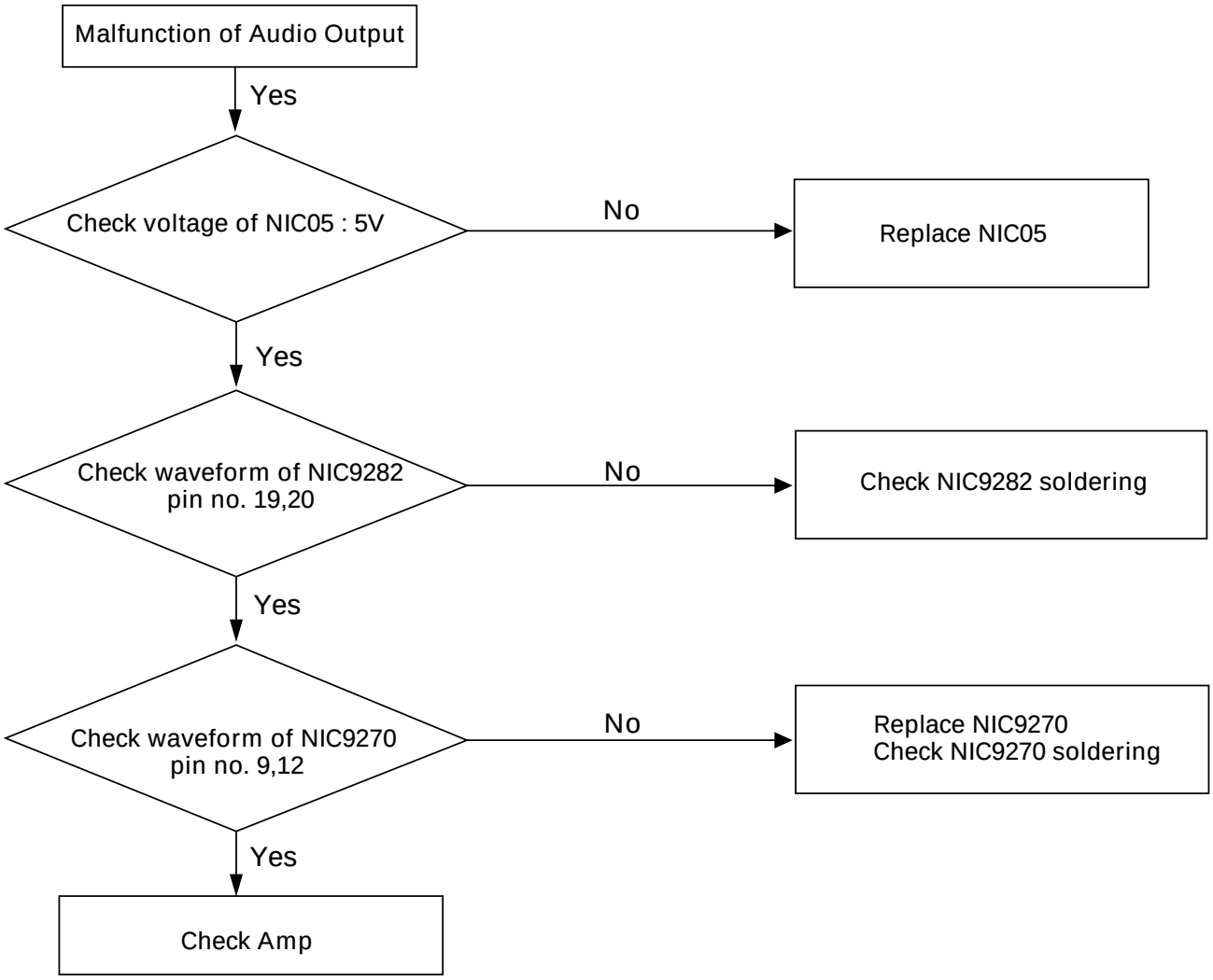

9. Block Diagrams

9-1 Main

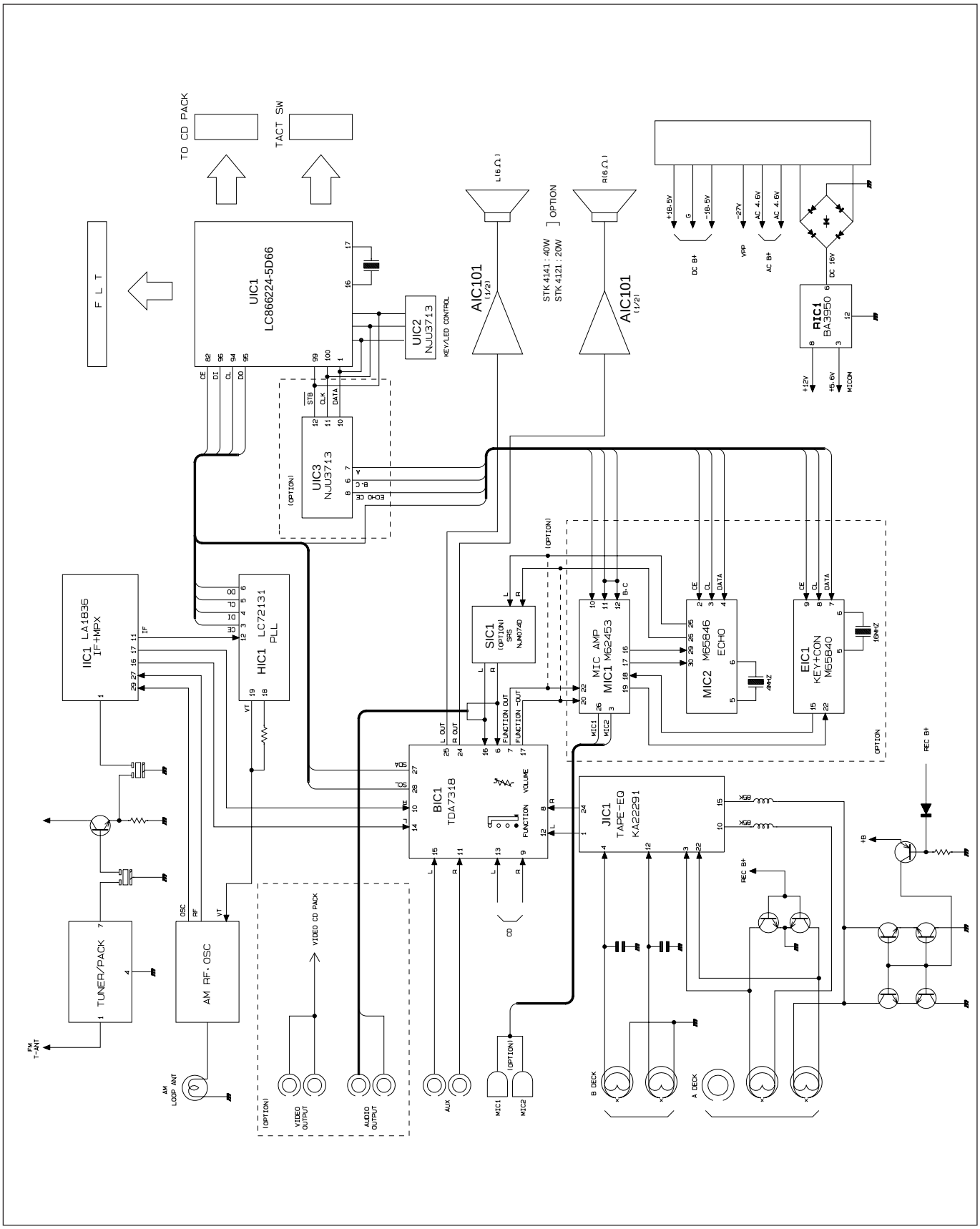

9-2 CD

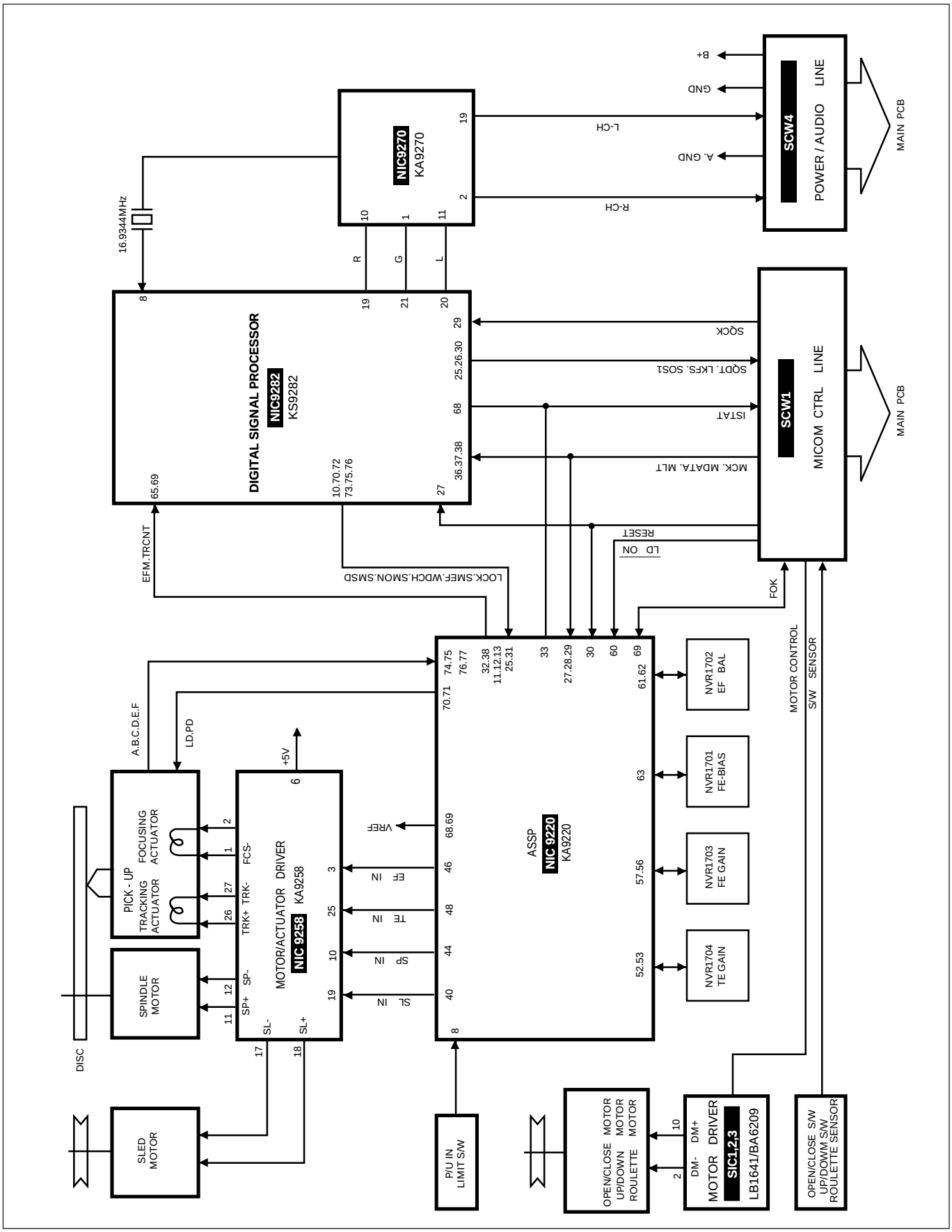
B+
GND
A. GND
L-CH
R-CH
SCW4
POWER / AUDIO LINE
MAIN PCB
NIC9270
KA9270
16.9344MHz
R
G
L
DIGITAL SIGNAL PROCESSOR
NIC9282
KS9282
SCOCK
SCDT. LKFS. SOSI
ISTAT
MCK. MDATA. MLT
SCW1
MICOM CTRL LINE
MAIN PCB
RESET
LD ON
EFM.TRCNT
LOCK.SMEF.WDCH.SMON.SMSD
FOK
MOTOR CONTROL
S/W SENSOR
A.B.C.D.E.F
LD.PD
+5V
VREF
ASSP
NIC 9220
KA9220
NVR1702
EF BAL
NVR1701
FE-BIAS
NVR1703
FE GAIN
NVR1704
TE GAIN
PICK - UP
FOCUSING ACTUATOR
TRACKING ACTUATOR
MOTOR/ACTUATOR DRIVER
NIC 9258
KA9258
FCS-
TRK+ TRK-
SP-
SP+
SL-
SL+
EF IN
TE IN
SP IN
SL IN
SPINDLE MOTOR
SLED MOTOR
DISC
P/U IN LIMIT S/W
OPEN/CLOSE MOTOR
UP/DOWN MOTOR
ROULETTE
MOTOR DRIVER
SIC1.2.3
LB1641/BA6209
DM+
DM-
OPEN/CLOSE S/W
UP/DOWM S/W
ROULETTE SENSOR

9-3 LC866224 : UIC1

No.	Port	Name	I/O	Description
1	P5 2	MIC	O	MIC ON/OFF
2	PWM 1	MUTE	O	MUTE
3	P2 0	SD	I	SD
4	1	SD-L	I	SD-LED
5	2	POWER	O	POWER CONTROL
6	3	DUBB	I	H-DUBBING IN(TAPE)
7	4	DO	O	LC72131, TDA7318, M65846,M65840
8	5	CLK	O	LC72131, TDA7318, M65840,M65846
9	6	DI	I	LC72131 DATA INPUT
10	7	CE	O	LC72131 (PLL) CE
11	TEST		O	TEST PIN
12	RES		I	RESET INPUT
13	XT 1		I	SUB OSC (32.768KHz)
14	XT 2		O	SUB OSC (32.768KHz)
15	VSS		I	GND
16	CF 1		I	OSC INPUT (12MHz)
17	CF 2		O	OSC OUTPUT
18	VDD		I	POWER
19	P8 0	KEY 1	I	A/D KEY INPUT 1
20	1	KEY 2	I	A/D KEY INPUT 2
21	2	KEY 3	I	A/D KEY INPUT 3 (OPTION)
22	3	KEY 4	I	A/D KEY INPUT 4 (OPTION)
23	4	JOG 21	I	JOG IN
24	5	JOG 22	I	JOG IN
25	6	NAR	I	LEVEL A
26	7	EQ IN	I	LEVEL B
27	P7 0	SCOR	I	POWER SENSE
28	1	SENS	I	CD TRAY SENSE
29	2	SENS	I	SCOR INTERRUPT
30	3	REMO	I	REMOCON INPUT
31	S 0	DISC2	O	DISC2 LED
32	1	DISC3	O	DISC3 LED
33	2	G3	O	VFD CONTROL
34	3	G4	O	"
35	4	G5	O	"
36	5	G6	O	"
37	6	G7	O	"
38	7	G8	O	"
39	8	G9	O	"
40	9	G10	O	"
41	10	G11	O	"
42	11	G12	O	"
43	12	G13	O	"
44	13	G14	O	"
45	14	G15	O	"
46	15	G16	O	"
47	VDVP	+5.6V		
48	VP	-30V	O	VFD PINCH OFF VOLTAGE
49	S 16	S1	O	VFD CONTROL

No.	Port	Name	I/O	Description
50	S 17	S2	O	VFD CONTROL
51	18	S3	O	"
52	19	S4	O	"
53	20	S5	O	"
54	21	S6	O	"
55	22	S7	O	"
56	23	S8	O	"
57	24	S9	O	"
58	25	S10	O	"
59	26	S11	O	"
60	27	S12	O	"
61	28	S13	O	"
62	29	S14	O	"
63	30	S15	O	"
64	31	S16	O	"
65	P0 0	OPTION	I	TUNER, CD/VIDEO-CD
66	1	U/D SW	I	V10 UP/DOWN SW
67	2	FOK	I	FOCUS OK
68	3	LKFS	I	GFS
69	4	MLT	O	DSP/SSP CONTROL LATCH
70	5	MDATA	O	DSP/SSP CONTROL DATA
71	6	MCK	O	DSP/SSP CONTROL CLOCK
72	7	DOWN	O	DOWN MOTOR
73	P1 0	UP	O	UP MOTOR
74	1	SUBQ	I	SUBQ DATA
75	2	SQCK	O	SUBQ RECEIVE CLOCK
76	3	MUTE	O	DSP MUTE
77	4	OPEN	O	OPEN MOTOR
78	5	CLOSE	O	CLOSE MOTOR
79	6	RL M-	O	ROULETTE MOTOR -
80	7	RL M+	O	ROULETTE MOTOR +
81	P3 0	ISTAT	I	SENSE
82	1	LD_XPS	O	LD ON + XRST
83	2	JOG11	I	JOG VOLUME 1
84	3	JOG12	I	JOG VOLUME 2
85	4	CLATCH	I	LATCH (MAIN ← VIDEO CD)
86	5	CDATA	I	DATA (MAIN ← VIDEO CD)
87	6	V CLK	I	CLOCK (MAIN ← VIDEO CD)
88	7	V DATA	O	DATA (CD → VCD)
89	VSS	VSS		POWER PORT
90	VDD	VDD		POWER PORT
91	P4 0	V LATCH	O	LATCH (CD- VCD)
92	1	OPEN	O	OPEN SW
93	2	CLOSE	O	CLOSE SW
94	3	CE 23	O	NJU3713(OPTION) CE
95	4	CE 22	O	NJU3713 CE
96	5	DISC1	O	DISC 1 LED 1
97	6	SYNC	I	REC-IN (CD-SYNC)
98	7	CE 21	O	M65840 (KEY CON) LATCH
99	P5 0	DO 2	O	NJU3713, NJU3713 (O)
100	P5 1	CLK 2	O	NJU3713, NJU3713(O)

NJU3713 : UIC2

No.	Name	Description
1	P5	LED : SRS / MUTE
2	P6	LED : SBS / SALSA
3	P7	LED : PLAY/PAUSE
4	P8	LED : CD SKIP/BACK
5	VSS	
6	P9	LED : JOG
7	P10	SRS ON/OFF H : ON
8	P11	T-CTRL
9	P12	H-OUT
10	DATA	
11	CLK	
12	STB	
13	CLR	
14	P1	AUX
15	P2	TUNER
16	P3	TAPE
17	P4	CD
18	VDD	

NJU3713 : UIC3 (ECHO, KEY+CON OPTION)

No.	Name	Description
1	P5	LED : VOICE CANCEL
2	P6	LED : "b"
3	P7	LED : "#"
4	P8	LED : ECHO ON/OFF
5	VSS	
6	P9	SW B, C (M62453)
7	P10	SW A (M62453)
8	P11	ECHO CE
9	P12	
10	DATA	
11	CLK	
12	STB	
13	CLR	
14	P1	RESET
15	P2	DOUBLE
16	P3	EMPHA
17	P4	SEL3
18	VDD	

9-4 IC & TR Internal Diagrams

BA3950 : RIC1

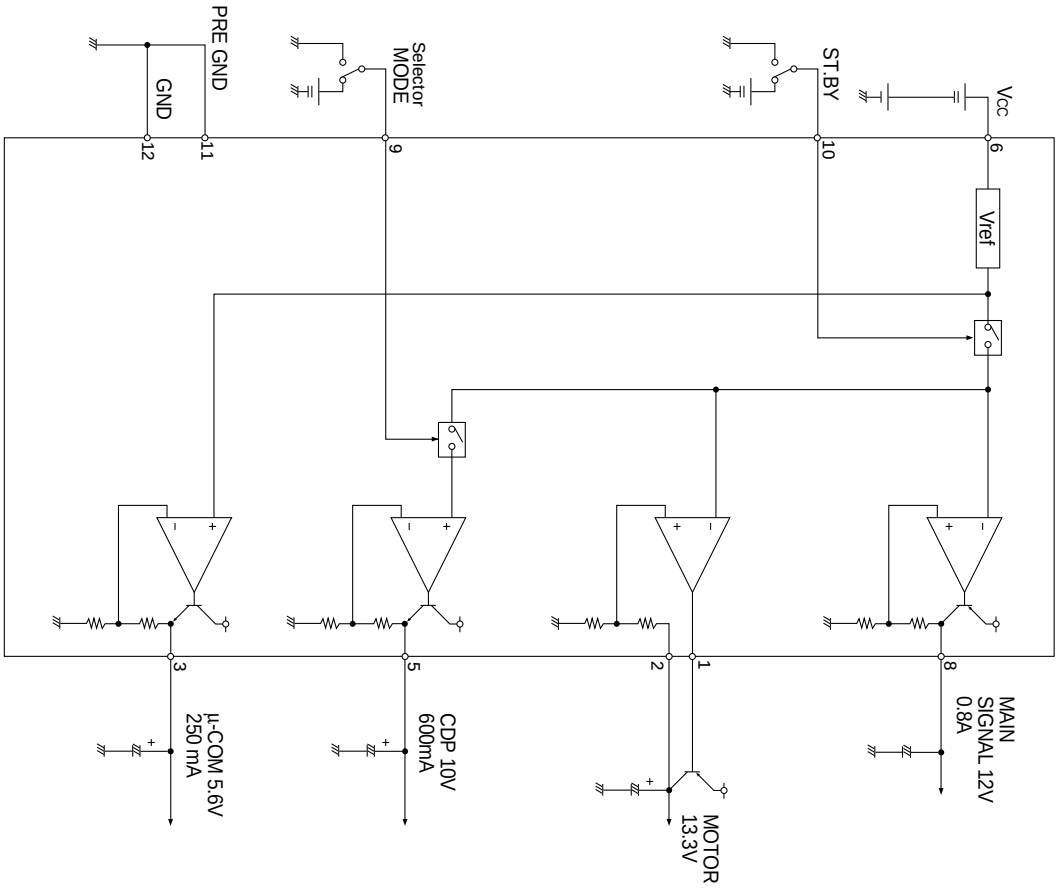

M65840 : EIC1 (OPTION KEY+CON)

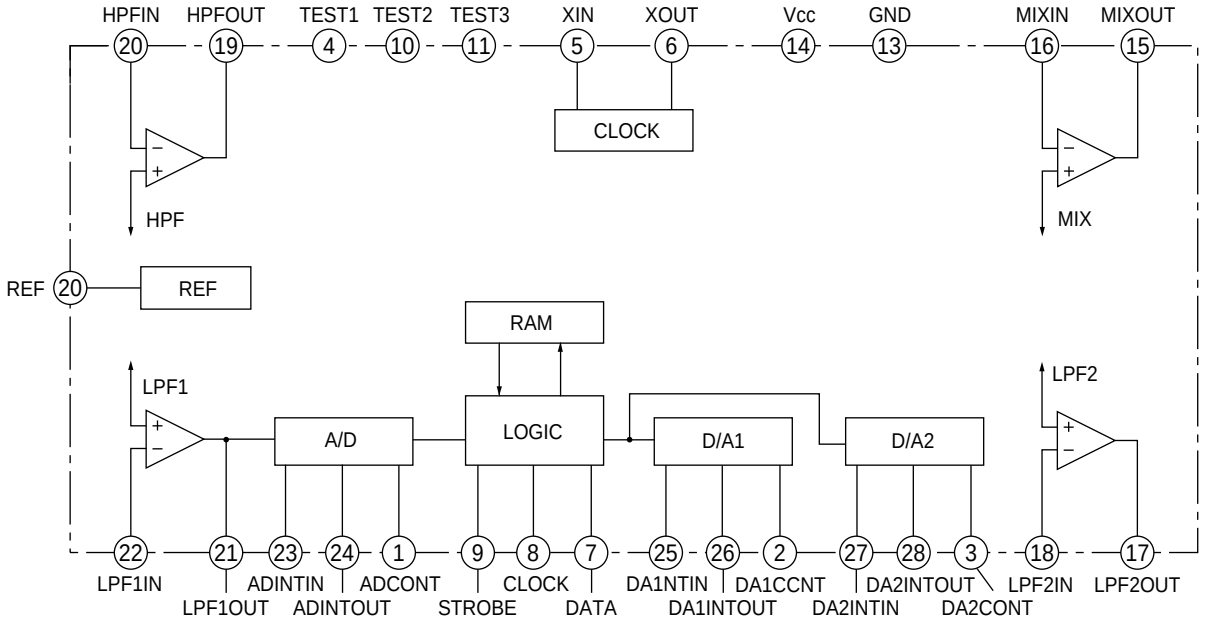

NJU3713 : UIC2, UIC3 (OPTION)

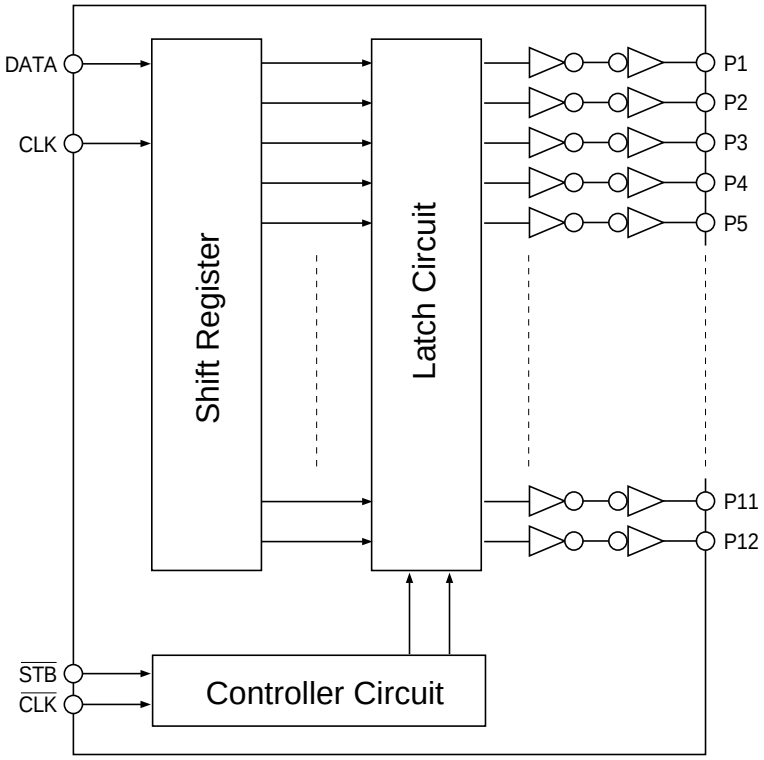

MC14066 : SIC3

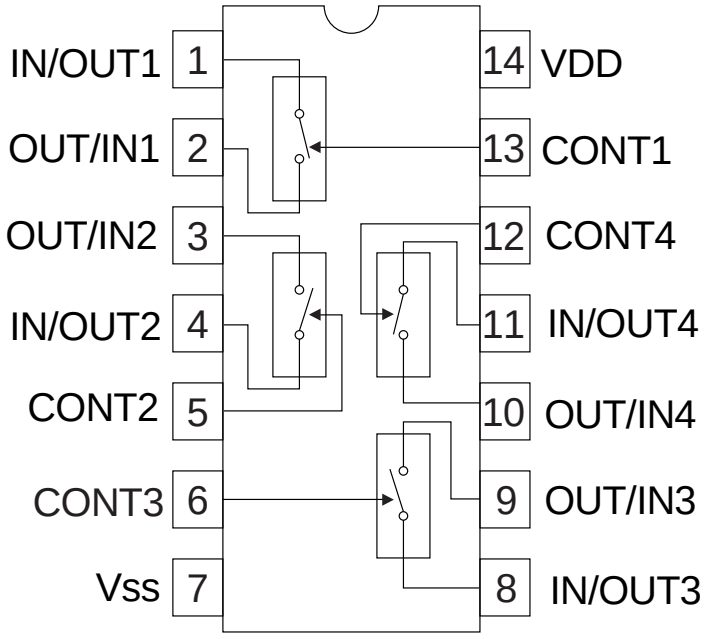

KA22291 : JIC1

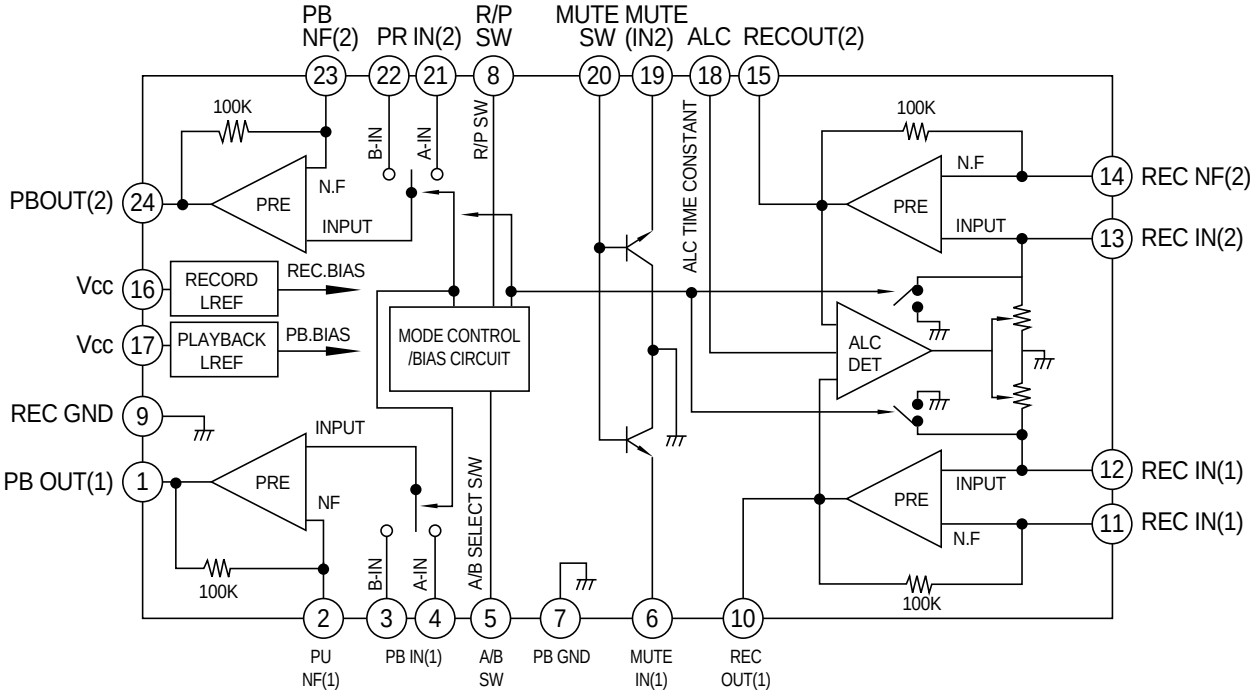

STK4121V (20W) : AIC101
STK4141V (40W) (OPTION)

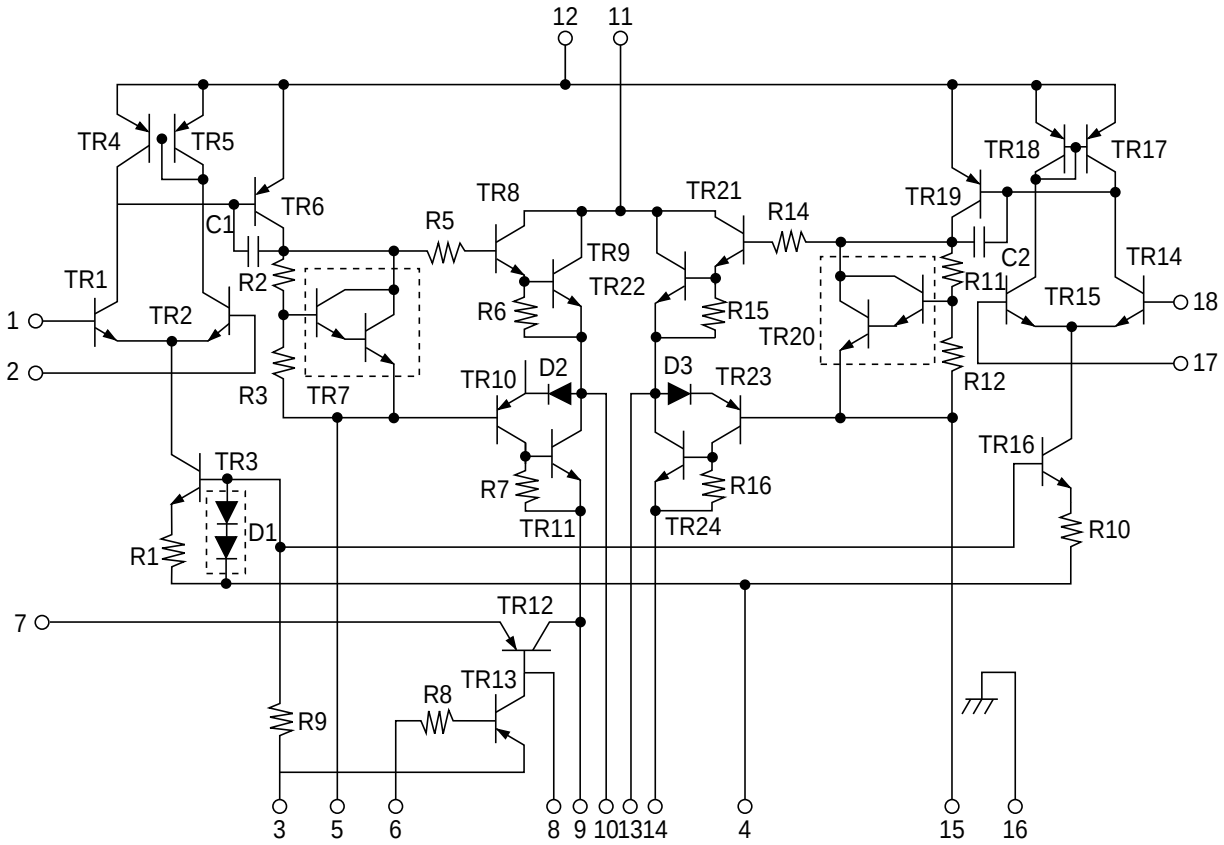

M62453SP : MIC1 (MIC OPTION)

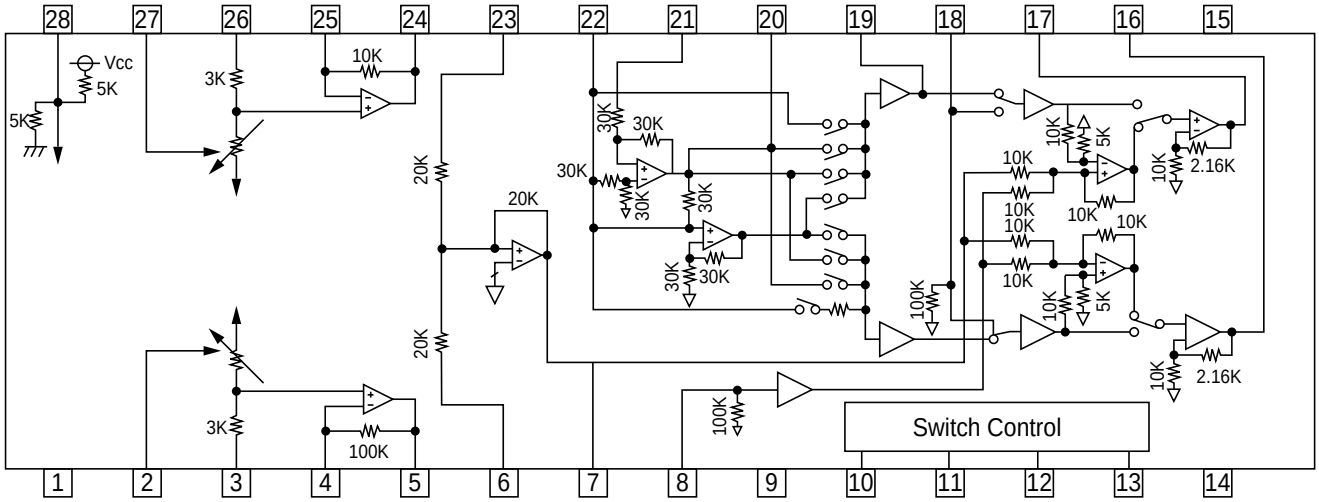

LA1836 : IIC1

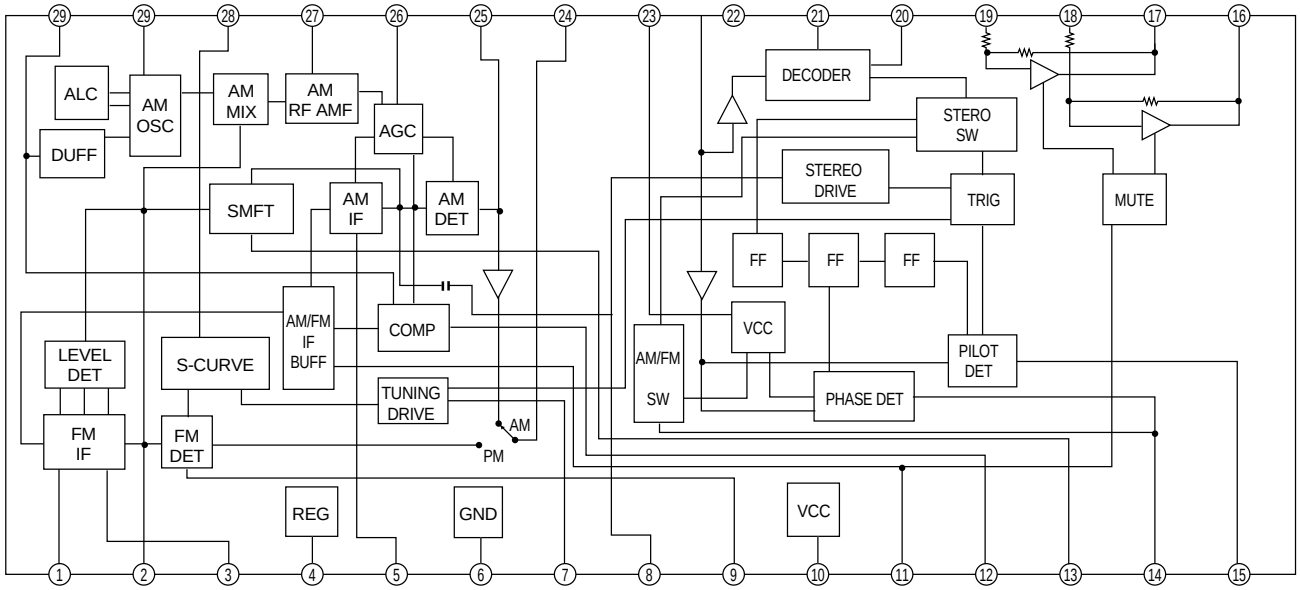

TDA7318 : BIC1

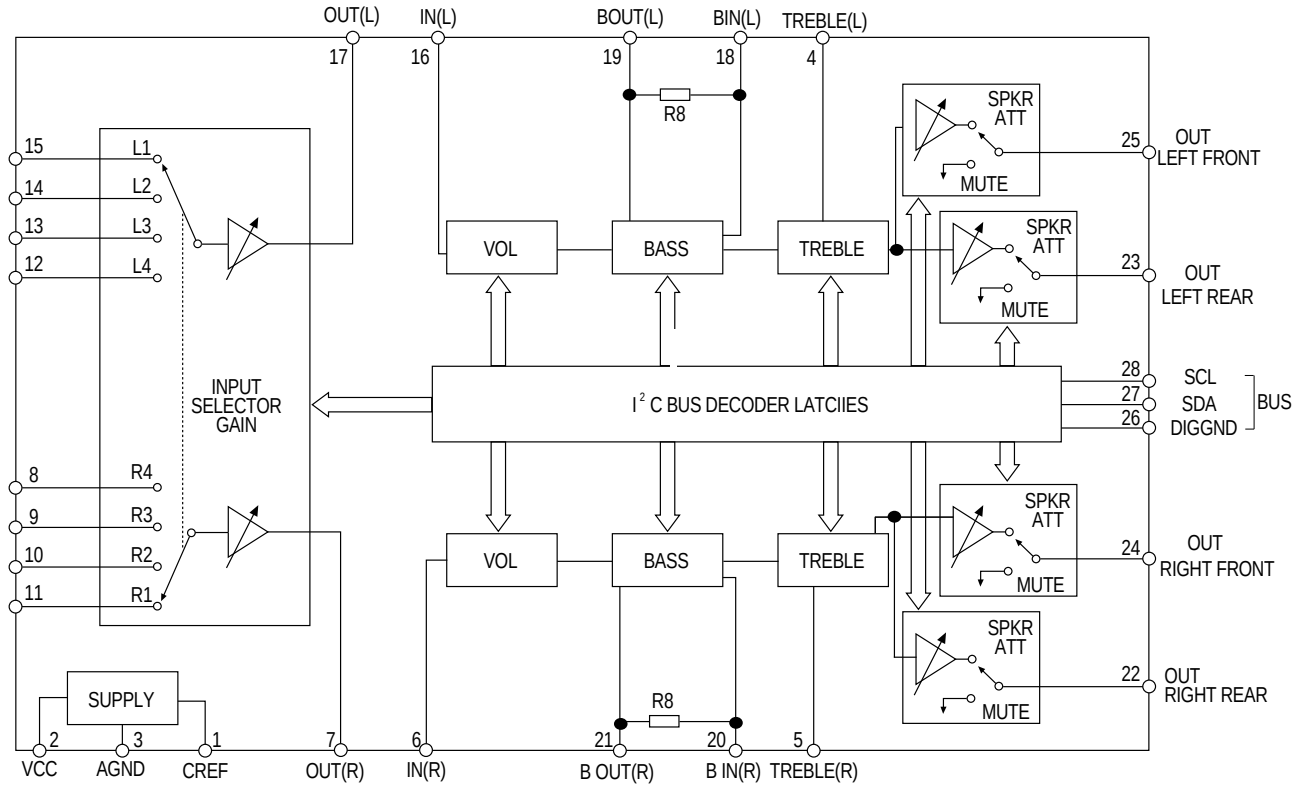

M65846FP : MIC2 (ECHO OPTION)

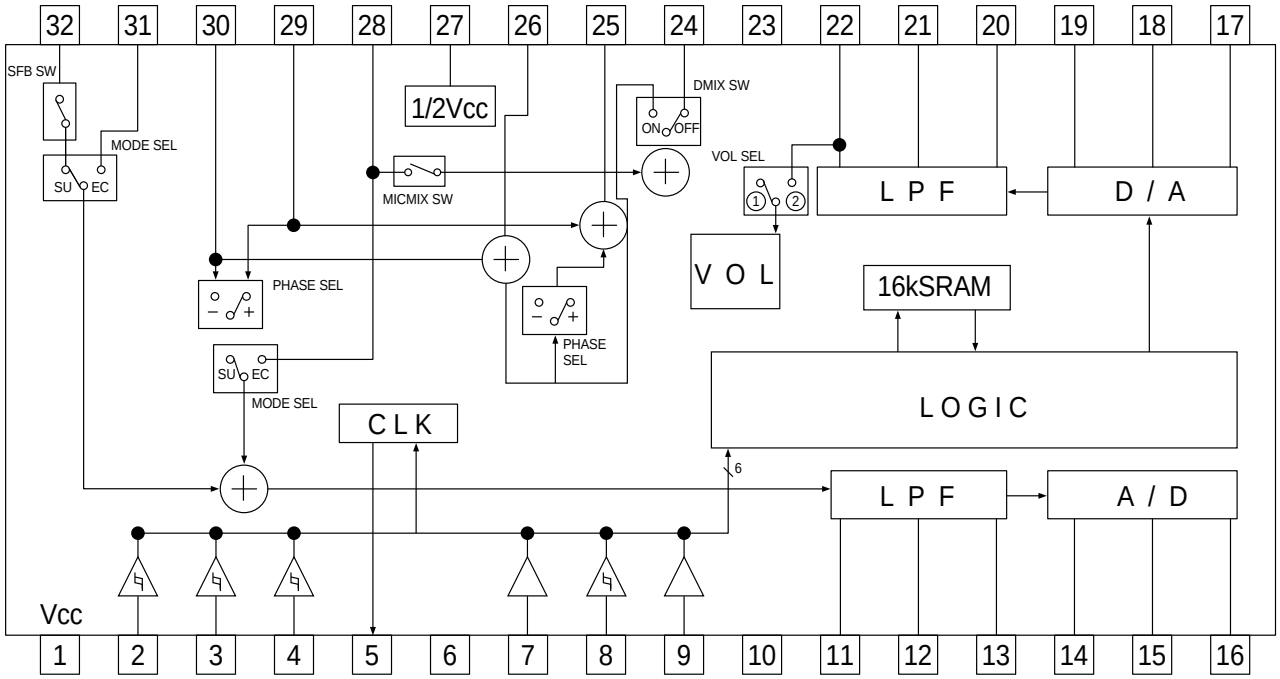

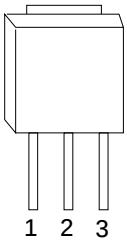

TR	1	2	3
KSR1003 A928	E	C	B

* NOTE : KSB564 ='EBC' TYPE

LB1641/BA6209(MOTOR DRIVER) : SIC1, SIC2,SIC3, NIC1641

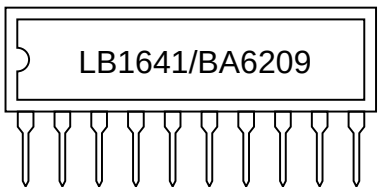

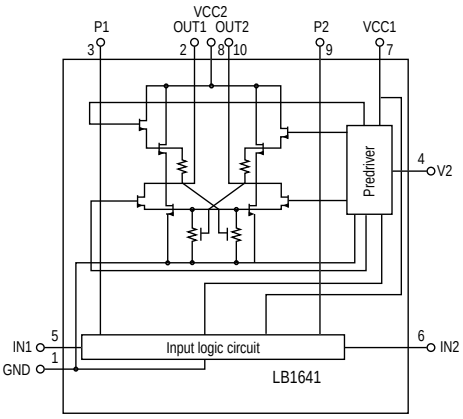

KA9270 : NIC9270

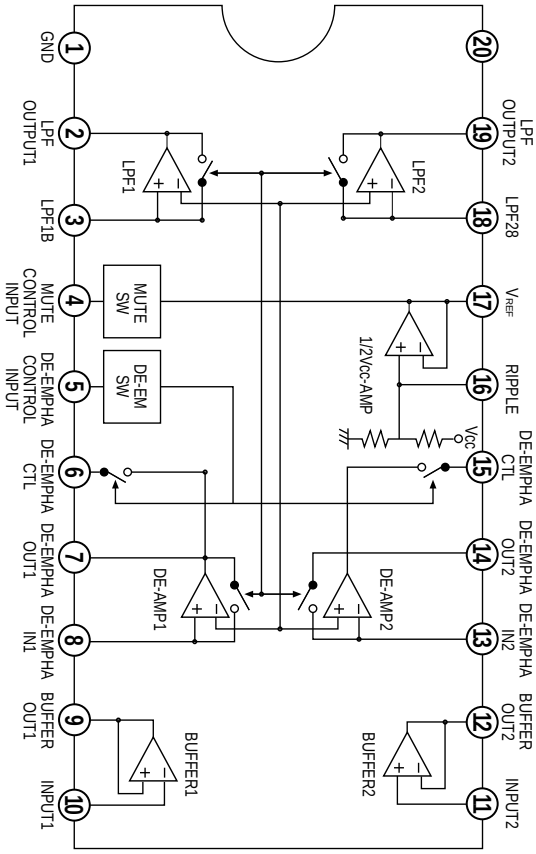

KA9258 : NIC9258

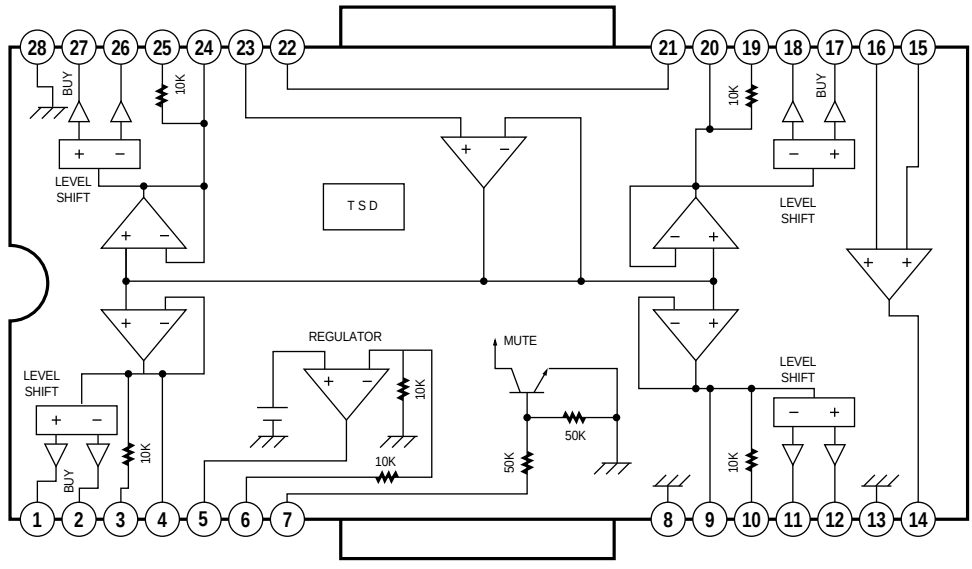

KA9220(ASSP) : NIC9220

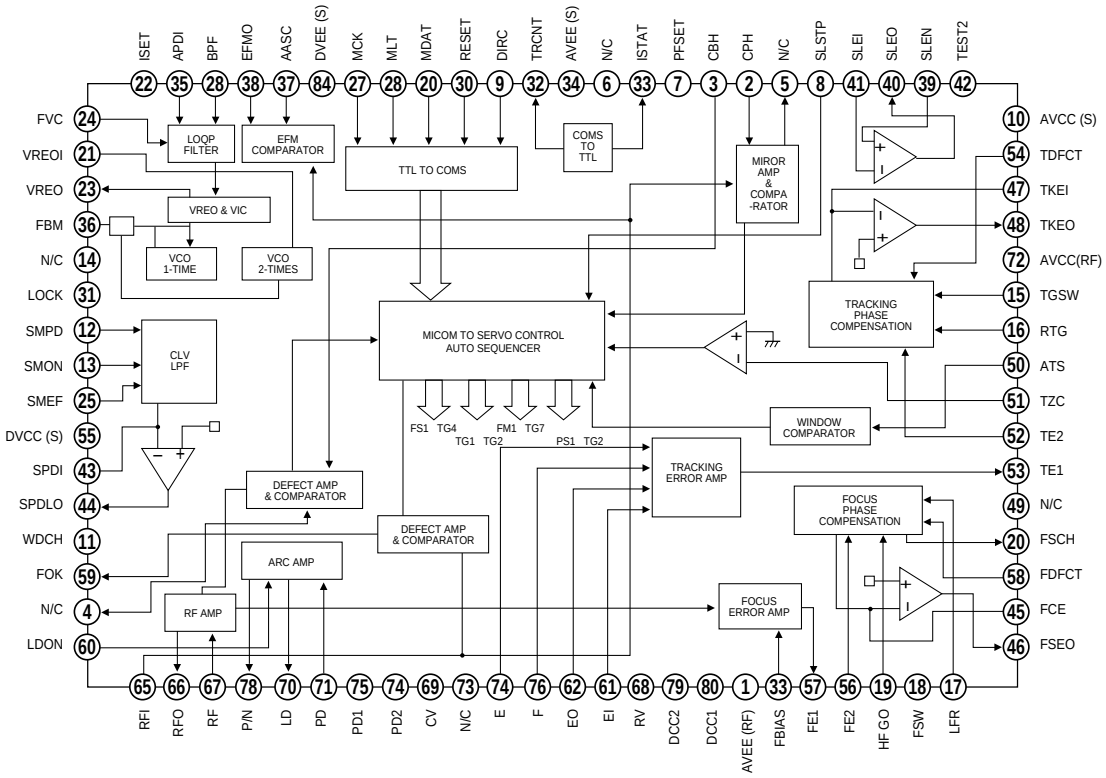

KS9282(DSP) : NIC9282

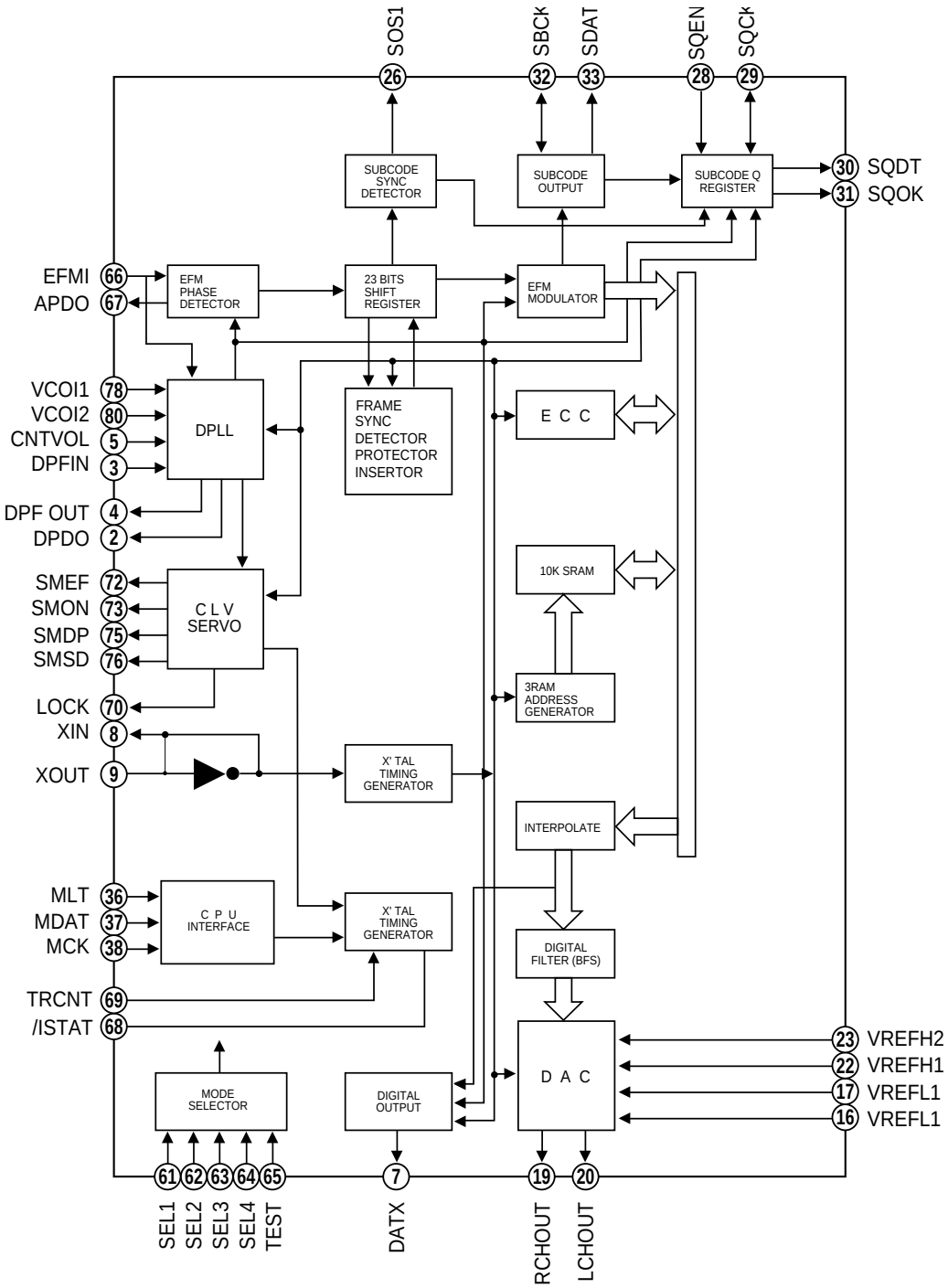

12. Schematic Diagrams

12-1 Main

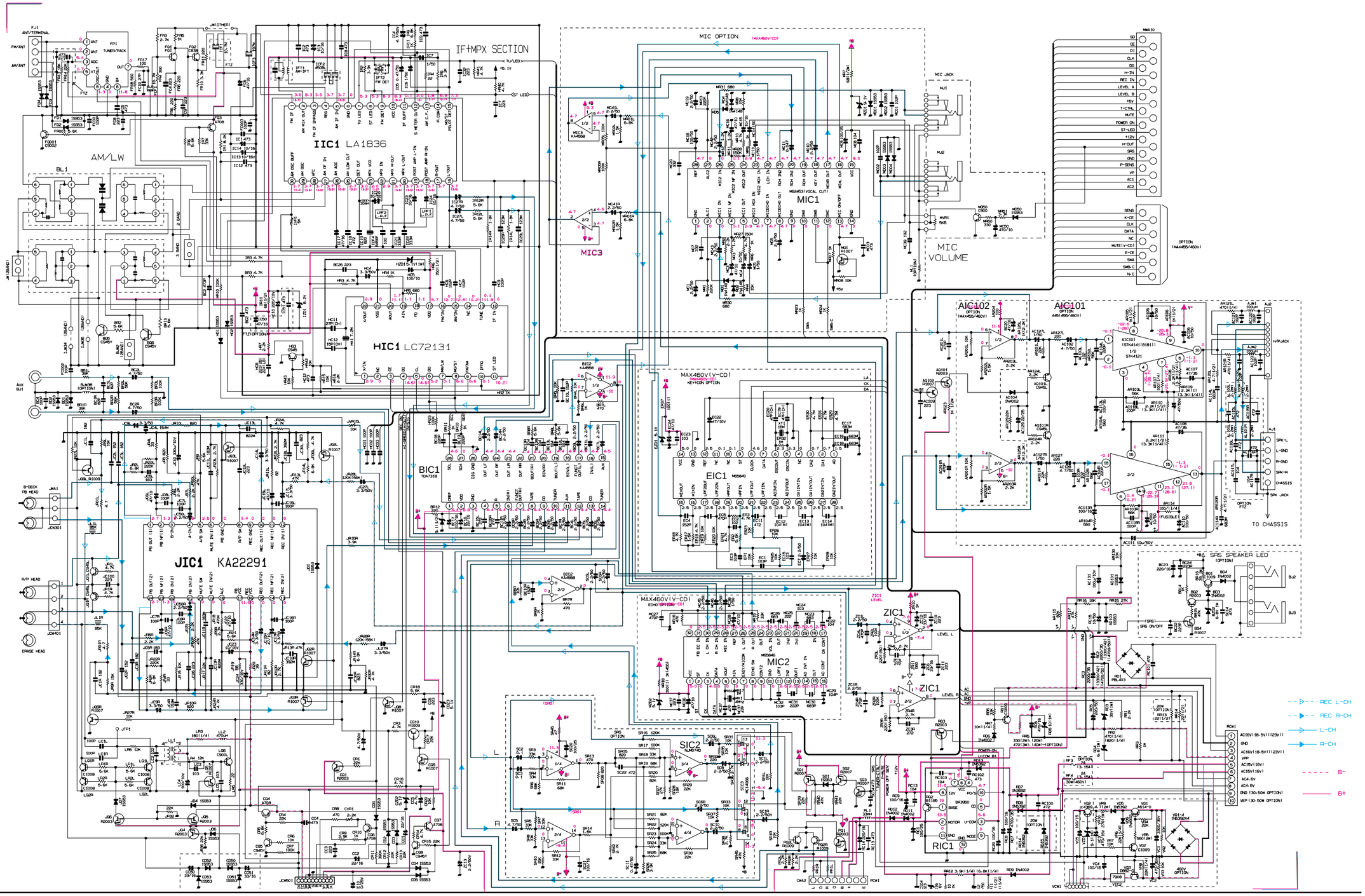

12-2 Front

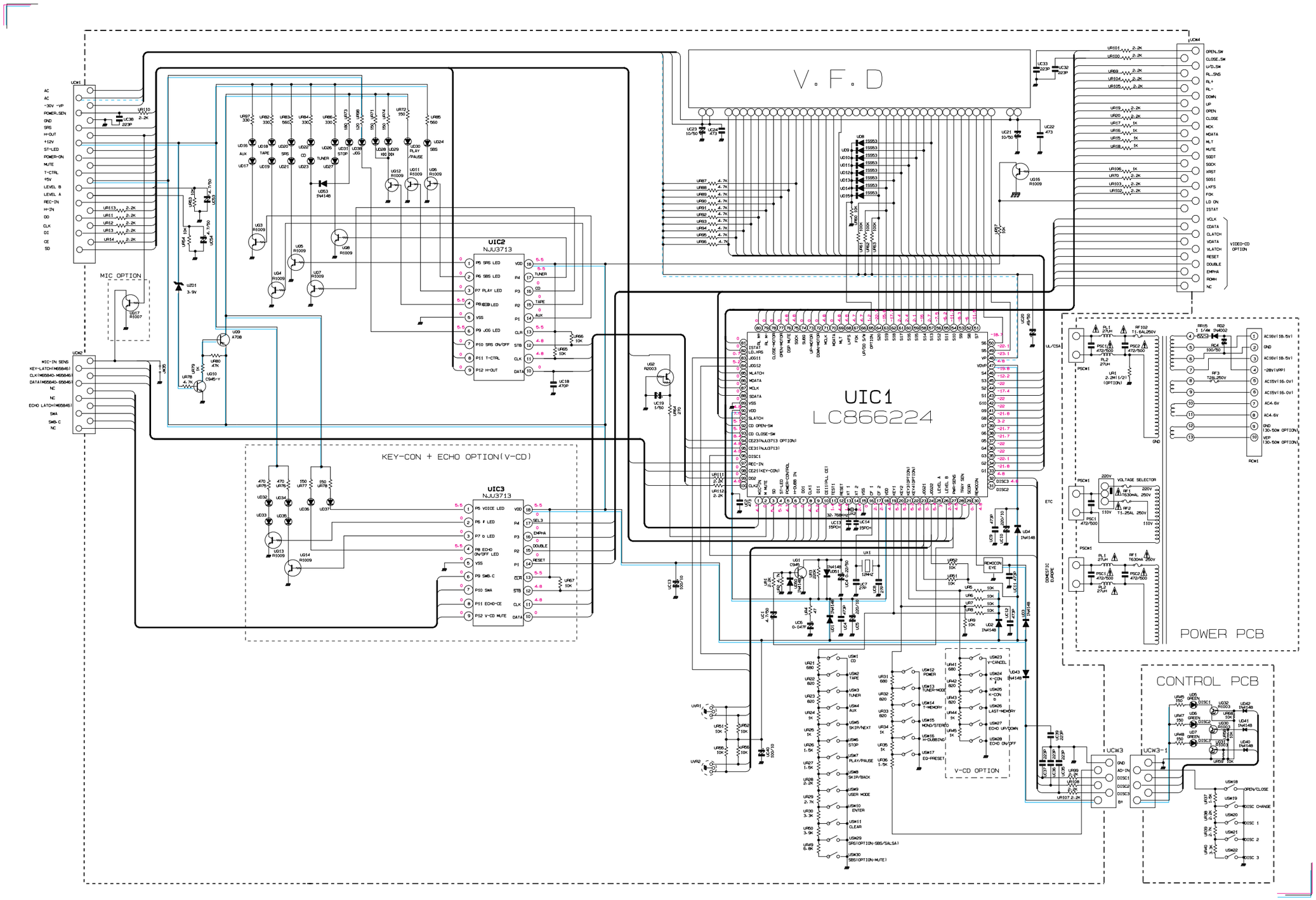
V.F.D
UIC1
LC866224
UIC2
NJU3713
UIC3
NJU3713
MIC OPTION
KEY-CON + ECHO OPTION(V-CD)
V-CD OPTION
POWER PCB
CONTROL PCB
VIDEO-CD OPTION

12-3 CD

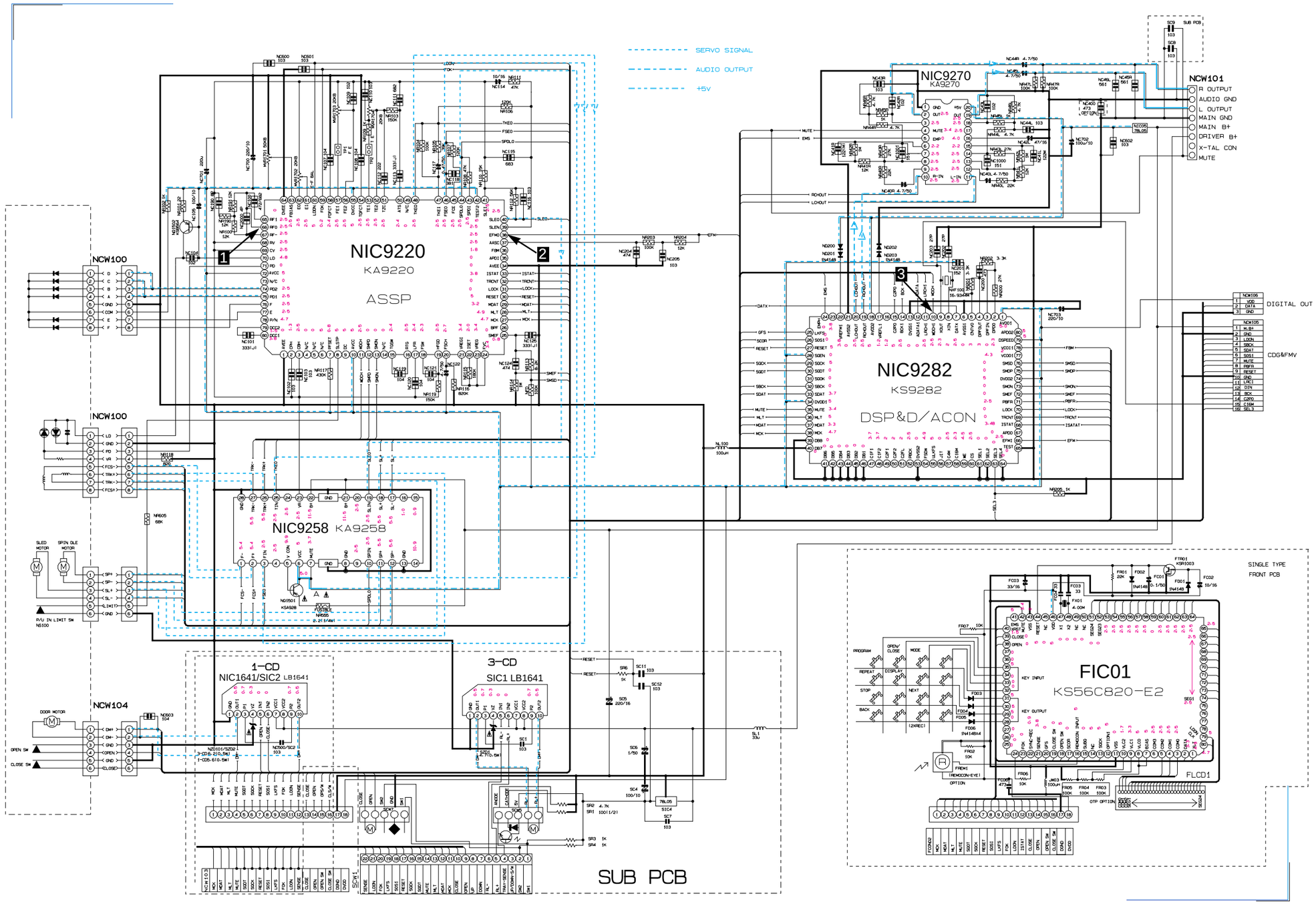
SERVO SIGNAL
AUDIO OUTPUT
+5V
NIC9220
KA9220
ASSP
NIC9270
KA9270
NIC9282
KS9282
DSP&D/ACON
NIC9258 KA9258
NCW100
NCW101
R OUTPUT
AUDIO GND
L OUTPUT
MAIN GND
MAIN B+
DRIVER B+
X-TAL CON
MUTE
NCW104
NCW105
NCW106
DIGITAL OUT
CDG&FMV
1-CD
NIC1641/SIC2 LB1641
3-CD
SIC1 LB1641
SUB PCB
SINGLE TYPE
FRONT PCB
FIC01
KS56C820-E2
FLCD1
SLED MOTOR
SPIN DLE MOTOR
DOOR MOTOR
OPEN SW
CLOSE SW
1
2
3

3. Disassembly and Reassembly

3-1 Cabinet-Top

1. Remove 11 screws holding the cabinet-top.
2. Lift the back of the cabinet-top and slide it to the rear to remove. (See arrow)

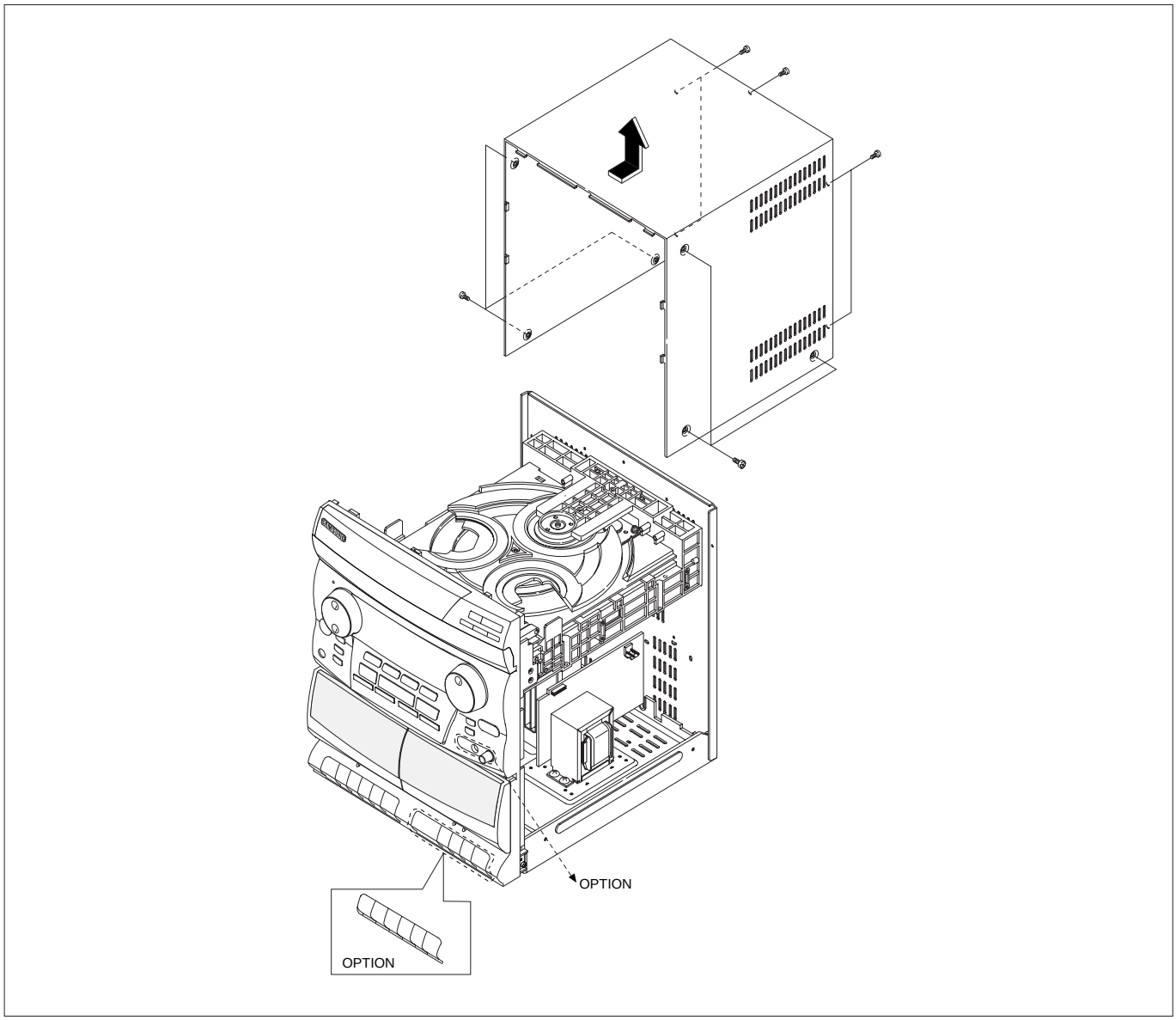

Figure 3-1

3-2 CD-MECHA, DOOR-CD

1. If power is connected :
   - Turn power on
   - Open the tray using the open/close key
   - Remove the Door in the direction of arrow ③.

2. If power is not connected :
   - Turn the gear clockwise using a screw driver as shown in Figure 3-2- 1.
   - Pull the Tray in the direction of arrow ② and then remove the Door in the direction of arrow ③ .

3. Remove 2 screws ④ and lift the CD-MECHA.

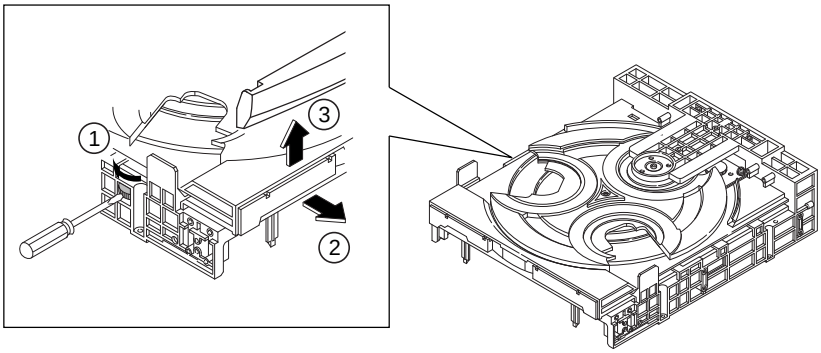

Figure 3-2-1

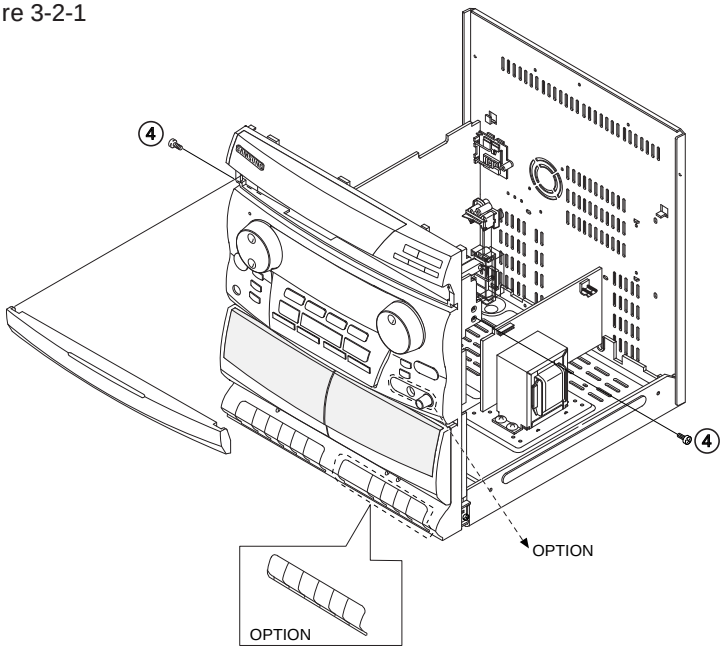

Figure 3-2

3-3 Cabinet-Rear and Main PCB

1. Remove 14 screws ⑤ and then lift the cabinet-rear ⑥ and slide it to rear to remove (see arrow).
2. Remove the Main-PCB ⑦ to rear.

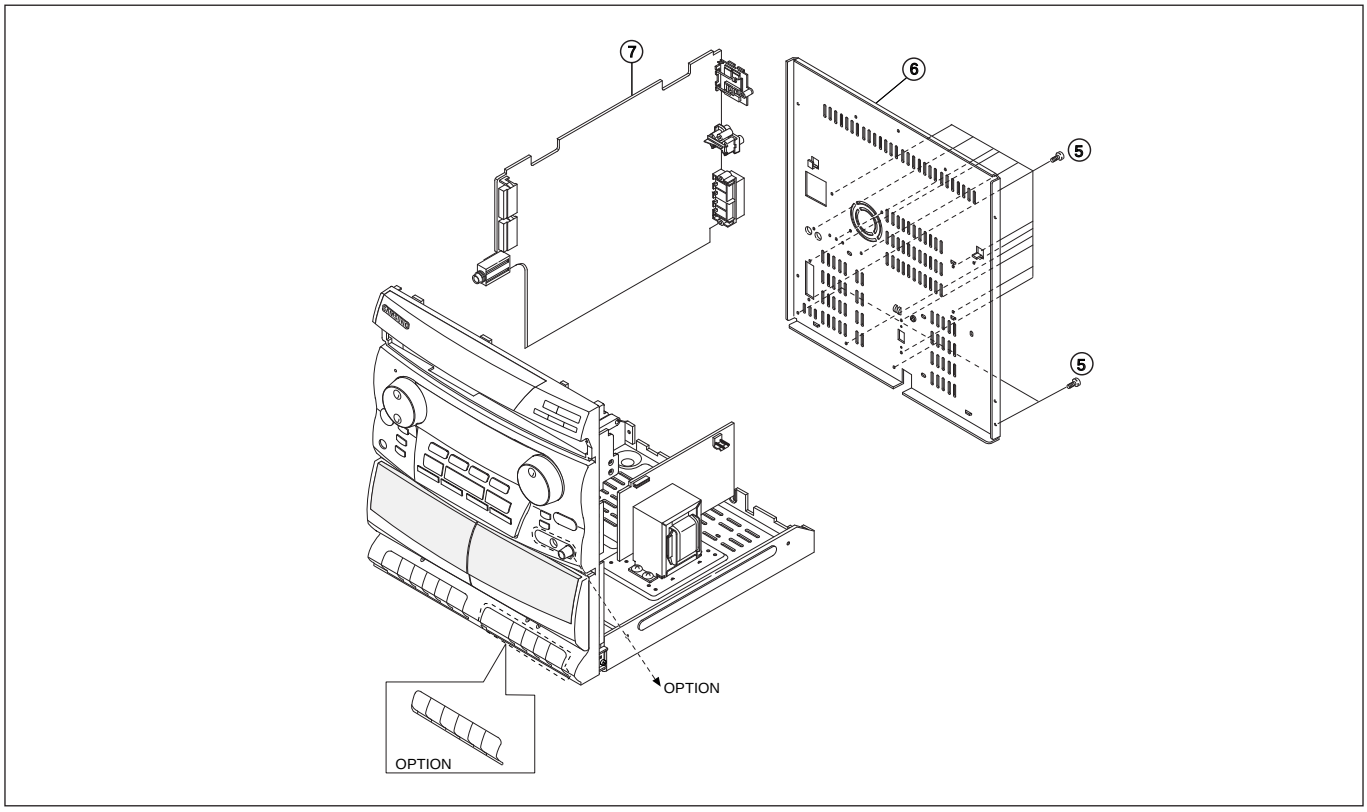

Figure 3-3

3-4 Cabinet-Front and Cabinet-Bottom

1. Remove 5 screws ⑧.
2. Remove the cabinet-rear by pushing the "A" and "B" as shown.

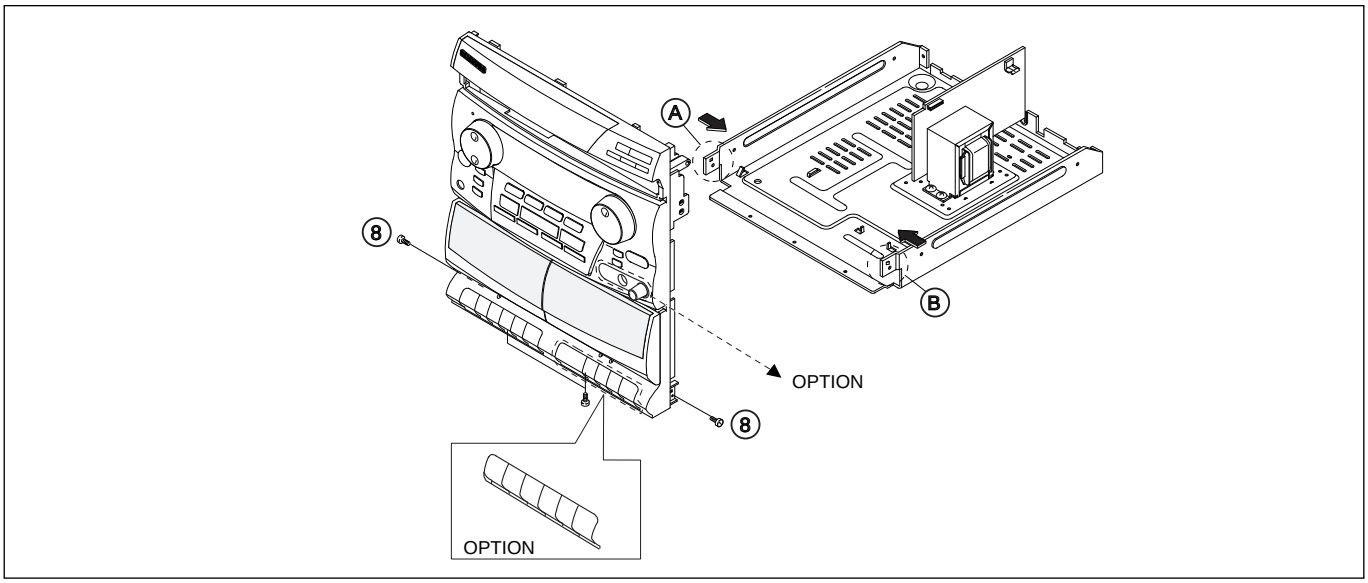

Figure 3-4

3-5 CD Mecha Main

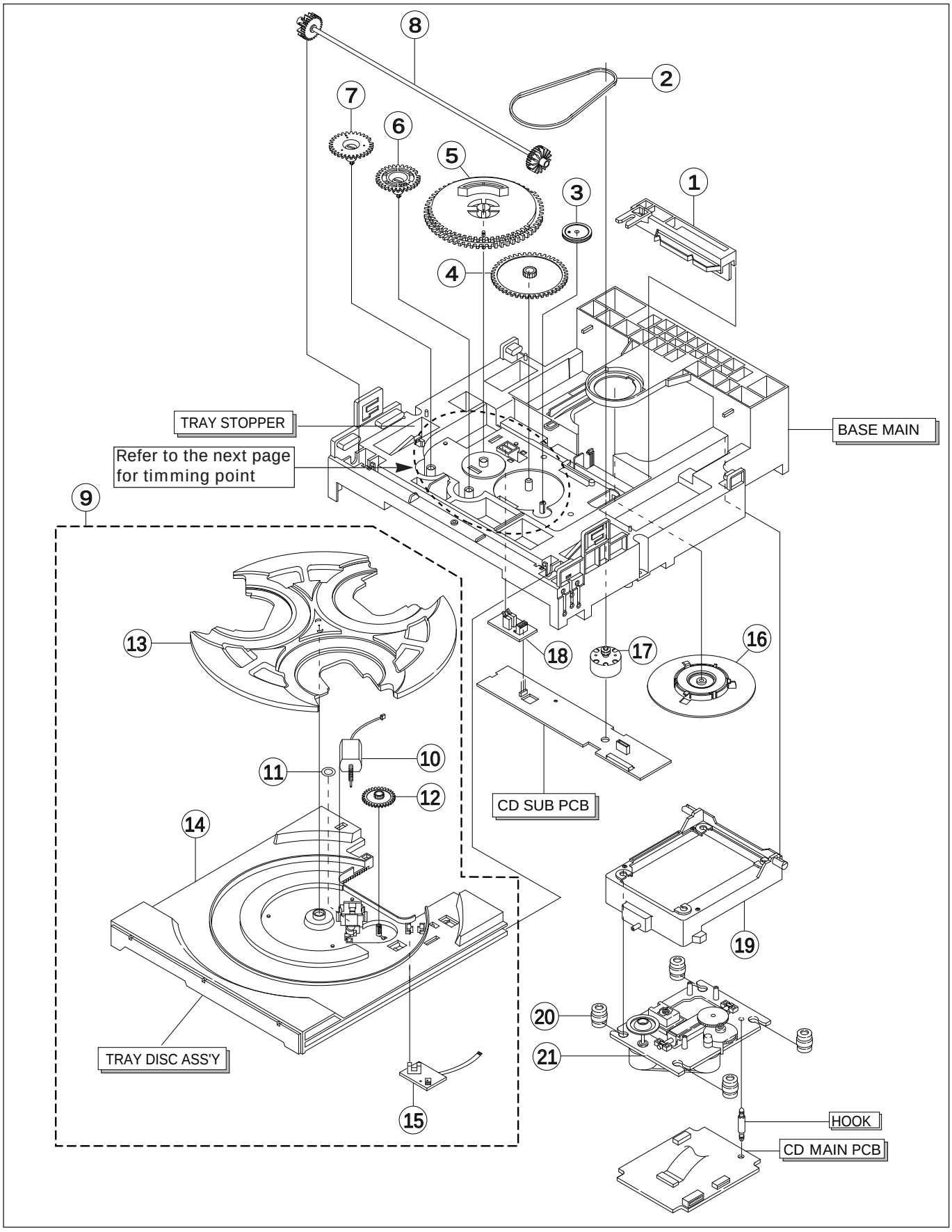

Figure 3-5

3-5 CD Mecha Continued

* When removing, take extreme care not to damage the hook.
1. Open the Tray Disc Ass'y by turning the Gear-Load (⑤) in the direction of open, then remove the Wire-Tray (㉕) .
2. Remove two Tray-Stopper and tray.

3-5-1 Tray Disassembly

1. Remove the Tray-Roulette (⑬) from the Tray-Disc Ass'y (⑭) by releasing the hook.
2. Remove the PCB-Sensor Ass'y (⑮) from the tray by releasing the hook.
3. Remove the Worm-Motor Ass'y (⑩) from the Tray-Disc Ass'y (⑭).
4. Remove the Cushion-Motor (⑪) from the Tray.
5. Remove the Gear-Roulette (⑫) from the Tray-Disc Ass'y (⑭) by releasing the hook.

3-5-2 Main Disassembly

1. Remove the Table-Chuck Ass'y (⑯) from the Base-Main by turning it.
2. Push the Slider-Cam (①) towards right, then lift it up to remove.
3. Remove the Gear-Tray (⑥) from the Base-Main by releasing the fixed hook.
4. Remove the Gear-Converter (⑦) from the Base-Main by releasing the fixed hook.
5. Remove the Gear-Cam (⑤) from the Base-Main by releasing the fixed hook.
6. Remove the Belt (②) from the Pulley-Motor Ass'y (⑰) & the Gear-Pulley (③).
7. Remove the Gear-Pulley (③) from the Base-Main by releasing the fixed hook.
8. Remove the Gear-Load (④).
9. Remove the Gear-Synchro (⑧).
10. Desolder two soldering points of the CD SUB PCB, then remove it from the Base-Main by releasing the hook.
11. Remove the Pully-Motor Ass'y (⑰) by releasing the hook.
12. Remove the PCB-SW Ass'y (⑱) by releasing the hook.

3-5-3 CD Main PCB Disassembly

1. Remove the Lever-Lifter (⑲) from the Base-Main by releasing two hooks.
2. Remove four Rubber-CD (⑳) from the Lever-Lifter and then remove the Deck-CD (㉑).
3. Remove the Hook .
4. Remove the CD Main PCB with the soldering iron.

*** Reinstall in reverse order.**

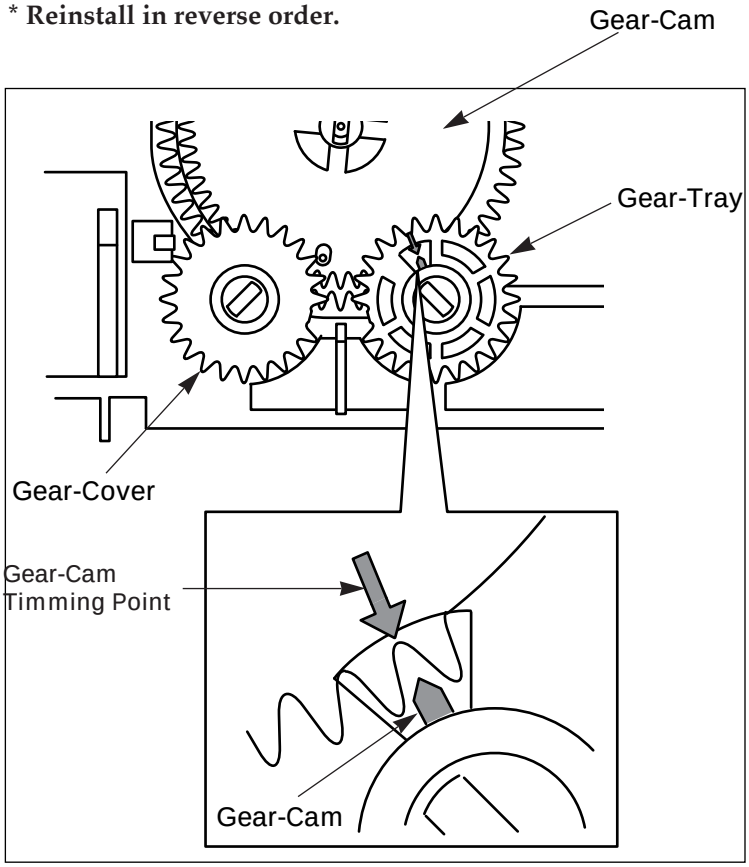

* Align the Gear-cam with the gear-Tray as shown in Figure3-6, then mount the Tray-Disc.

Figure 3-6

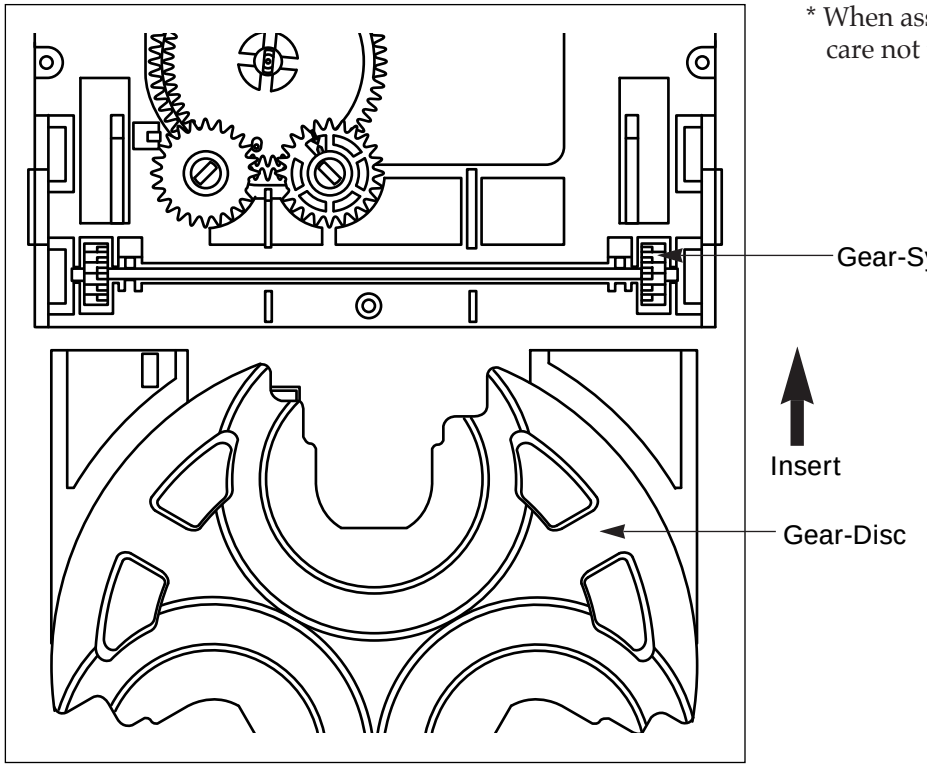

* When assembling the Tray-Disc, take extreme care not to engage with Gear-Synchro.

Figure 3-7

3-8 CD Deck

1. Remove the Shaft ① .
2. Lift the P/U ② .
   Note : Take extreme care not to touch the surface of lens.
3. Lift the Center-ring ③ .
4. Remove the Spring-T/Table ④ .
5. Remove the Turn-Table (M) ⑤ .
6. Remove 2 screw ⑥ and then remove the Spindle-Motor ⑦ .
7. Remove the Cover-Gear ⑧ by pushing the hook.
8. Remove the Gear(c) ⑨ by pushing the hook.
9. Lift the Gear(b) ⑩ .
10. Remove the Gear(a) ⑪ .
11. Remove 2 screws ⑫ and then remove the Feed-Motor ⑬ .
12. Remove the Chassis-Deck(M) ⑭.

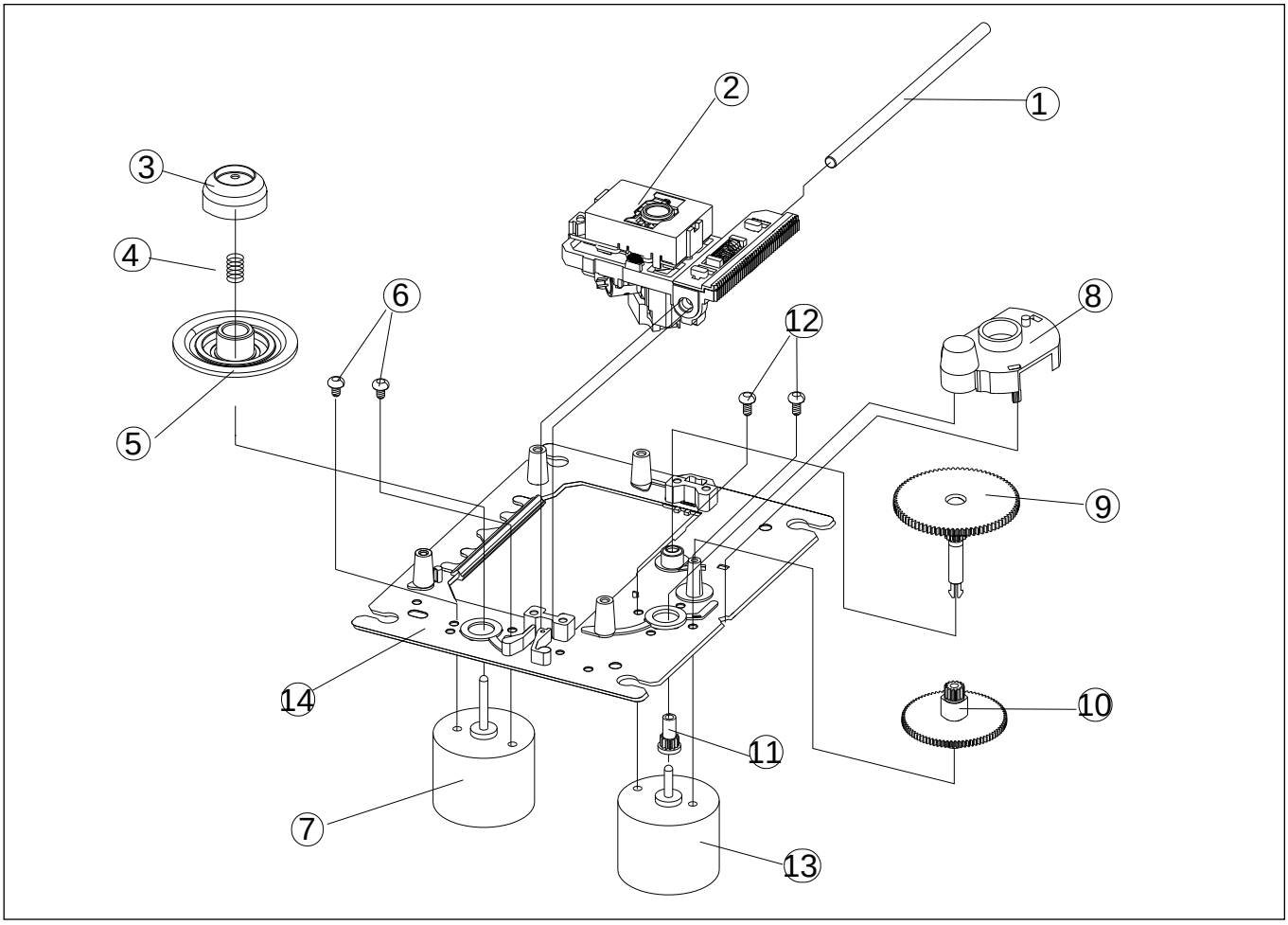

Figure 3-8

7. Exploded Views and Parts List

7-1 Cassette Deck View and Parts List

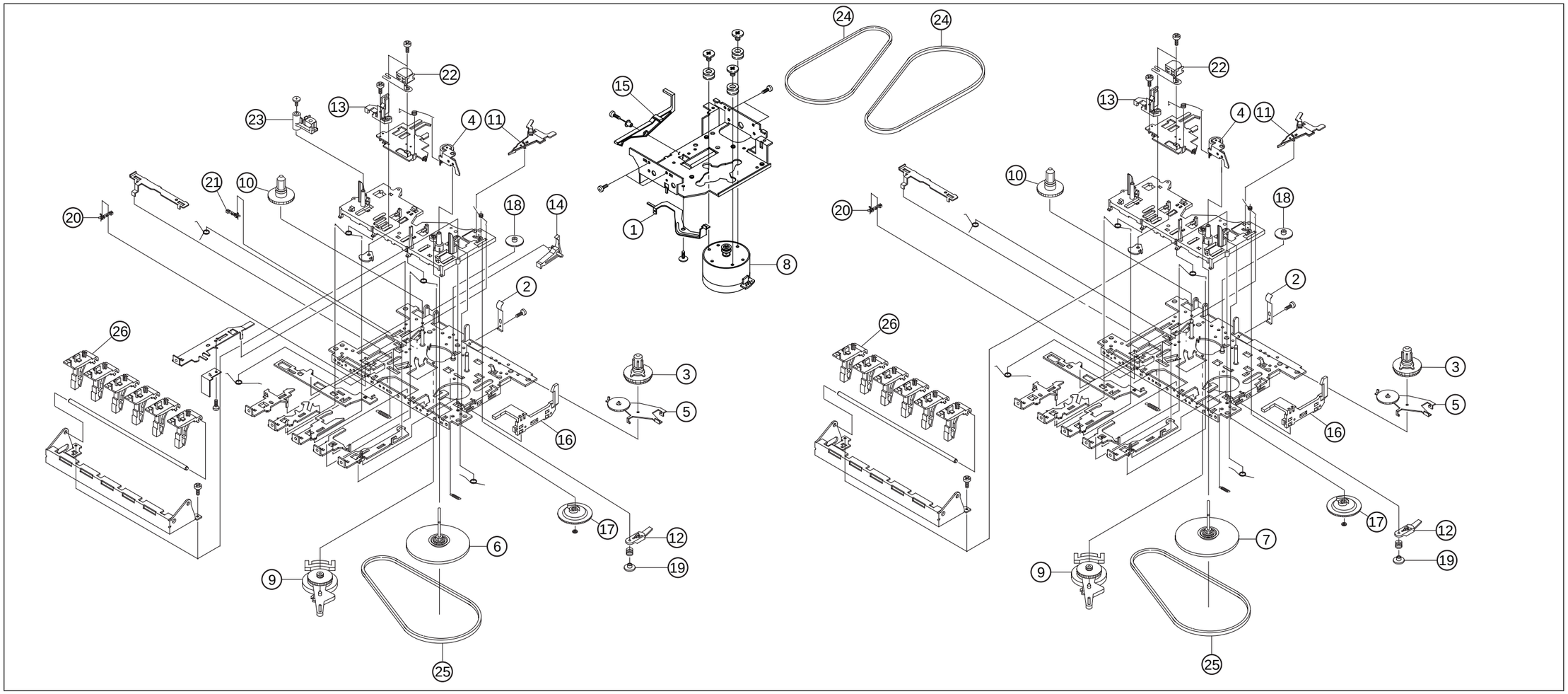

No.	New Code No.	Description	Specification	Old Code No.
	AH59-20003A	DECK-CASSETTE	ADR2006FW	17159-0045-00
1	AH81-10026X	LEVEL-SYNCHRO	11134-01280AA	10000-607-186
2	AH81-10026C	SPRING PACK	51299-02506XC	10000-607-146
3	AH81-10025B	TAKE UP REEL ASS'Y	ADR28-010	10000-607-101
4	AH81-10025D	PINCH ARM ASS'Y	ADR26-001	10000-607-103
5	AH81-10025E	IDLER ARM ASS'Y	ADR02-042	10000-607-104
6	AH81-10025F	FLYWHEEL GEAR S ASS'Y	ADR15-021	10000-607-105
7	AH81-10025G	FLYWHEEL GEAR D ASS'Y	ADR15-022	10000-607-106
8	AH81-10021T	MOTOR	EG530YD2B	10000-502-020
9	AH81-10025J	FR ARM ASS'Y	ADR22-012	10000-607-108
10	AH81-10025K	REEL GEAR ASS'Y	11128-00045AA	10000-607-109
11	AH81-10025T	ARM-SENSOR	11102-00530AA	10000-607-117
12	AH81-10025M	PAUSE LOCK CAM	11116-00011A	10000-607-111

No.	New Code No.	Description	Specification	Old Code No.
13	AH81-10025P	HEAD BASE M	11105-00031AA	10000-607-113
14	AH81-10026B	LEVER REC SAFETY	11134-01000A	10000-607-145
15	AH81-10026W	LEVER RELEASE	11134-01240AA	10000-607-184
16	AH81-10026M	LEVER EJECT(F)	11134-01220AA	10000-607-160
17	AH81-10025Q	CAM GEAR	11128-00393AA	10000-607-114
18	AH81-10025R	F.F GEAR	11128-00055AA	10000-607-115
19	AH81-10025S	PAUSE CAP	11116-00011AA	10000-607-116
20	AH81-10026T	LEAF SW (MAIN)	MSW1541 X ACV	10000-607-178
21	AH81-10026U	LEAF SW (REC)	MSW 1716CV	10000-607-179
22	AH81-10022E	R/P HEAD	MS15R-AA2N1	10000-523-008
23	AH81-10026P	MGARM ASS'Y	11102-00520AA	10000-607-162
24	AH81-10026L	BELT MAIN	59.7 PI X 1.0T	10000-607-159
25	AH81-10026H	BELT SUB	34.7 PI X 1.0T	10000-607-156
26	AH81-10025U	BUTTON KNOB	11133-00010AA	10000-607-128

7-1 Cassette Deck View and Parts List (Option)

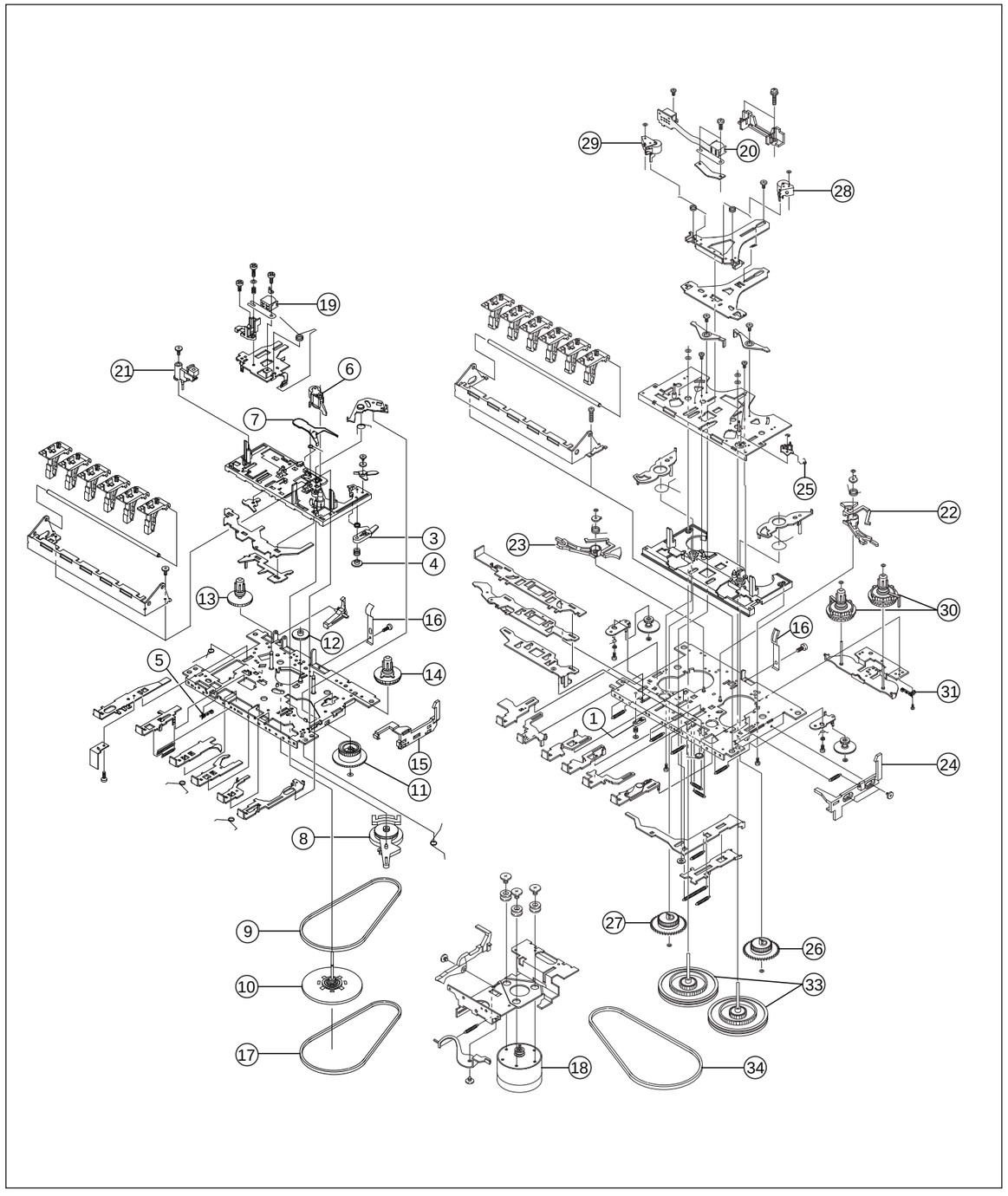

No.	New Code No.	Description	Specification	Old Code No.
	AH59-20002C	TAPE DECK ASS'Y	TN521ZSW-290Z/332	14929-123-140
1	AH81-10001V	PAUSE LEVER	1821-01-15	10000-186-111
3	AH81-10005U	PAUSE LEVER	1821-14-55	10000-268-011
4	AH81-10005V	PAUSE STOPPER	1921-14-11	10000-268-013
5	AH81-10005W	LEAF SWITCH	MSW-1541T	10000-268-023
6	AH81-10005Z	PINCH ROLLER ARM ASS'Y	1921-04-301	10000-268-035
7	AH81-10006K	SENSOR	1921-05-06	10000-268-053
8	AH81-10006B	RF CLUCH ASS'Y	1921-07-302	10000-268-039
9	AH81-10006C	RF BELT	1921-07-03	10000-268-040
10	AH81-10006E	FLYWHEEL ASS'Y	1921-09-303	10000-268-044
11	AH81-10006F	CAM GEAR	1921-26-02	10000-268-047
12	AH81-10006G	FF GEAR	1821-10-07	10000-268-049
13	AH81-10006H	SUPPLY REEL ASS'Y	1921-05-304	10000-268-051
14	AH81-10006J	TAKE UP REEL ASS'Y	1921-05-303	10000-268-052
15	AH81-10006M	EJECT SLIDE LEVER	1921-13-02	10000-268-062
16	AH81-10006N	PACK SPRING	1821-10-93	10000-268-064
17	AH81-10006R	MAIN BELT	1821-12-173	10000-268-159
18	AH81-10021T	MOTOR	EG530YD2B	10000-502-020
19	AH81-10022E	R/P HEAD	MS15R-AA2N1	10000-523-008
20	AH81-10022H	PB HEAD	MR359-KF243	10000-524-021
21	AH81-10022T	E-HEAD	PHK380-MS16A	10000-542-002
22	AH81-10023J	AUTO LEVER(F)	1851-20-01	10000-601-005
23	AH81-10023K	AUTO LEVER(R)	1851-20-02	10000-601-008
24	AH81-10023L	EJECT SLIDE LEVER	1851-17-03	10000-601-010
25	AH81-10023M	TURN OVER SPRING	1851-03-02	10000-601-015
26	AH81-10023N	GEAR-T CAM(F)	1851-05-03 A/S	10000-601-019
27	AH81-10023P	T-CAM GEAR(R)	1851-06-02	10000-601-022
28	AH81-10023Q	PINCH ROLLER(F)	1851-09-501	10000-601-054
29	AH81-10023R	PINCH ROLLER(R)	1851-10-501	10000-601-055
30	AH81-10023S	REEL ASS'Y	1851-11-501	10000-601-057
31	AH81-10023T	LEAF SW	MSW1290CV	10000-601-058
33	AH81-10023W	FLY WHEEL ASS'Y	1851-12-501	10000-601-065
34	AH81-10023W	MAIN BELT	1821-17-03	10000-601-066

7-2 Main Exploded View and Parts List

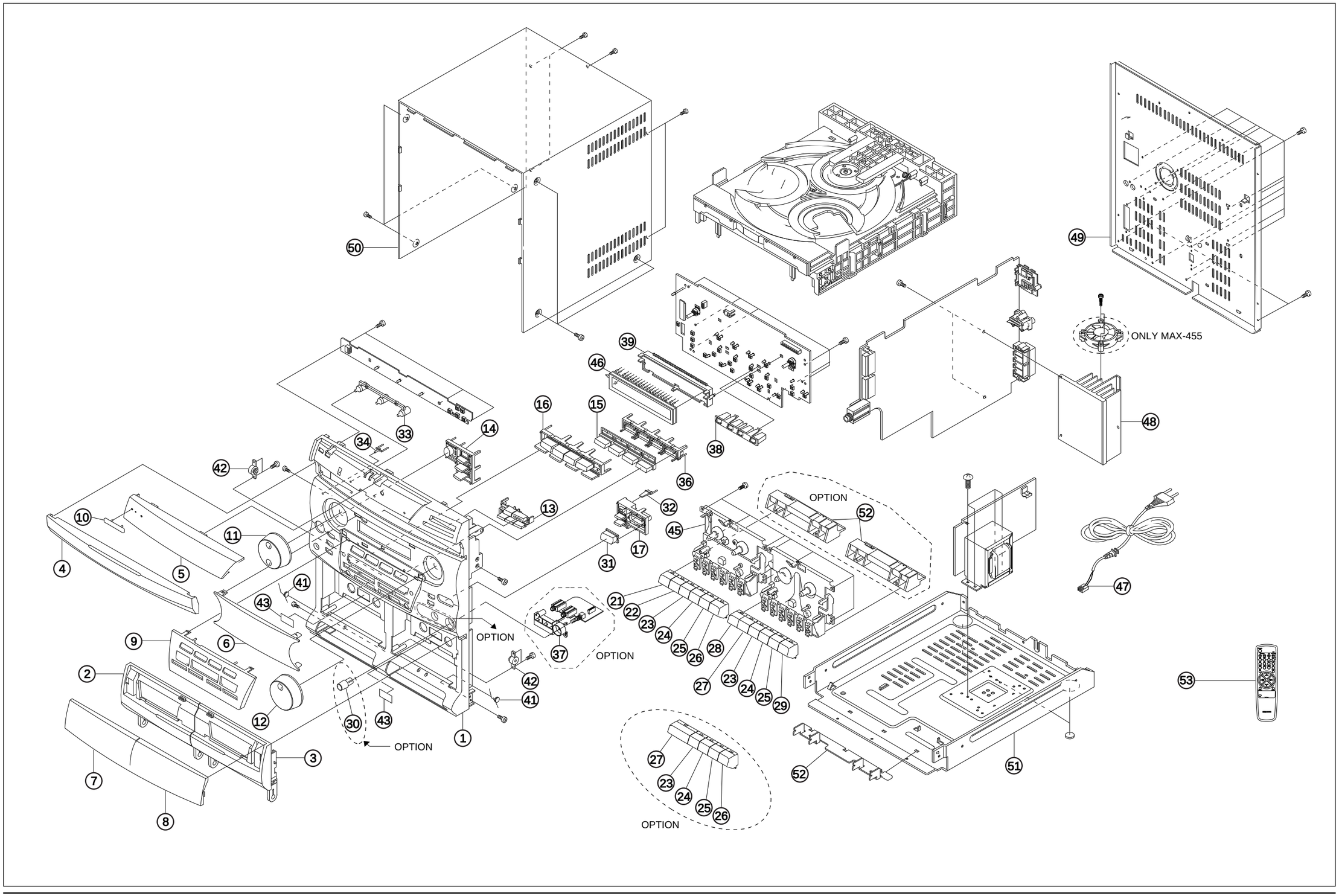

7-2-1 Main Parts List

No.	New Code No.	Description	Specification	Remarks
1	AH64-30108B	CABINET-FRONT	-,MIPS,94HB,T2.5,W270	
	F			OPTION
	G			“
	H			“
2	AH64-50101B	DOOR -CASSETTE.L	-,ABS,94HB,T3	
	C			OPTION
3	AH64-50102C	DOOR-CASSETTE.R	-,ABS,94HB,T3	
	B			OPTION
4	AH64-50305B	DOOR-TRAY	-,ABS,94HB,-,-,BLK	
5	AH64-40351E	WINDOW-CD	-,PMMA,-,-,VIOLET	
	K			OPTION
	S			“
	T			“
	U			“
	V			“
	W			“
6	AH64-40134B	WINDOW-FLT	-,PMMA,94HB,T2,VIOLET	
	C			OPTION
7	AH64-40135B	WINDOW-DOOR,L	-,PMMA,94HB,T1.5	
	C			OPTION
8	AH64-40136B	WINDOW-DOOR,R	-,PMMA,94HB,T1.5	
	C			OPTION
9	AH63-30043B	COVER-FUNCTION.B	-,ABS,94HB,T3	
	C			OPTION
10	AH64-70003B	BADGE-BRAND	-,AL,-,L30,WHT,NEW	
11	AH64-10645A	KNOB-JOG	ABS,94HB,BLK,-	
12	AH64-10644A	KNOB-VOLUME	ABS,94HB,BLK,-	
13	AH64-11003A	KNOB-OPEN/CLOSE	ABS,94HB,BLK,	
14	AH64-10412B	KNOB-POWER	ABS,94HB,BLK,	
15	AH64-10411B	KNOB-FUNCTION	-,PMMA,94HB,MILKY	
16	AH64-10084A	KNOB-CD	ABS+PMMA,-,BLK	
17	AH64-10413A	KNOB-SBS	ABS,94HB,BLK	
21	AH64-10336C	KNOB-DECK,REC	ABS,94HB,BLK	
22	AH64-10337B	KNOB-DECK,PLAY.A	ABS,94HB,BLK	
23	AH64-10335C	KNOB-DECK,REW	ABS,94HB,BLK	
24	AH64-10333B	KNOB-DECK,FF	ABS,94HB,BLK	
25	AH64-10334B	KNOB-DECK,ST/EJ	ABS,94HB,BLK	
26	AH64-10338C	KNOB-DECK,PAUSE	ABS,94HB,BLK	OPTION
27	AH64-10339B	KNOB-DECK,PLAY.L	ABS,94HB,BLK	“
28	AH64-10336B	KNOB-DECK MODE	ABS,94HB,BLK	“ ”
29	AH64-10388B	KNOB-DECK DIRECT	ABS,94HB,BLK	
30	AH64-10646A	KNOB-MIC	ABS,94HB,BLK	
31	AH67-10081B	LENS-SRS	-,-,PMMA,T6.5	OPTION
	C			OPTION
	D			OPTION
32	AH67-10083A	LENS-SBS	,PMMA,-,-,MILKY	
33	AH67-10103A	LENS-SKIP	-,-,PMMA,-,-,TRP+T102	
34	AH67-10132A	LENS-JOG	-,-,PMMA,-	
36	AH61-20165A	HOLDER-FUNCTION	ABS,94HB,WHT,-	
37	AH61-20164A	HOLDER-JACK	ABS,94HB,BLK	
38	AH61-20244A	HOLDER-CONTROL	ABS,94HB,WHT,-	
39	AH61-20080A	HOLDER-FLT	ABS,94HB,BLK	
41	AH61-60129B	SPRING-EJECT	,SUS,PI1.0	
42	AH61-80030A	DAMPER ASSY	-,POM,M0.8,G130,BLK	
43	AH68-50262B	LABEL-REFLECTOR	-,T/PAPER,T0.07,L20 W10	
44	AJ59-20002K	DECK-CDP	CMS-CR3P	
45	AH59-20002C	DECK-CASSETTE	TN521ZSW-290Z/332, CASSETTE	
46	AH07-20045C	VF-DISPLAY	SVA-10SS06,-,104,14X25	
47	AH39-10002G	POWER-CORD	CP,VCTFK-0.75X2, 1.8M,5239	
48	AH62-30017A	HEAT-SINK	AL,-,-,-,-,-	
49	AH64-30238C	CABINET-REAR	-,SECC,-,T0.8	
	F			OPTION
	G			“
	H			“
	K			“
	L			“
	P			“
	Q			“
50	AH64-30351A	CABINET-TOP	-,PVC STEEL,-,T0.75	
51	AH64-30352A	CABINET-BOTTOM	-,SECCL,-,T1.0,-,-,-	
52	AH61-20421A	HOLDER-DECK	ABS BLK	
53	AH59-10082B	REMOCON	-,-,BU2478,26,MAX445	

7-3 CD Pack

7-3-1 Parts List

No.	New Code No.	Description	Specification	Old Code No.
1	AH66-80022A	SLIDER-CAM	ABS HF-380 NTR	
2	AH66-60034A	BELT-LOAD	CR	
3	AH66-20186A	GEAR-PULLEY	POM (M90-44) WHT	
4	AH66-20187A	GEAR-LOAD	POM (M90-44) BLK	
5	AH66-20188A	GEAR-CAM	POM (M90-44) WHT	
6	AH66-20189A	GEAR-TRAY	POM (M90-44) BLK	
7	AH66-20190A	GEAR-CONVERT	POM (M90-44) WHT	
8	AH66-20191A	GEAR-SYNCRO	ABS HF-380 NTR	
9	AH59-10097A	ASSY-TRAY DISC	CMS-300,ASS'Y-TRAY	
10	AH59-10098A	ASSY-WORM -MOTOR	CMS-300,ASS'Y-WORM	
11	AH69-20044A	CUSHION-MOTOR	NBR BLK	
12	AH66-20193A	GEAR-ROULETTE	POM (M90-44) BLK	
13	AH66-90056A	TRAY-ROULETTE	ABS XR-401 BLK	
14	AH66-90055A	TRAY-DISC	-,ABS,-,BLK	
15	AH59-10099A	ASSY-PCB SENSOR	CMS-300,ASS'Y SENSOR	
16	AH59-10100A	ASSY-TABLE CHUCK	CMS-300,ASS'Y CHUCK	
17	AH59-10101A	ASSY-PULLEY-MOTOR	CMS-300,ASS'Y CHUCK	
19	AH66-30086A	LEVER-LIFTER	ABS HF-380 BLK	
20	AH73-10016A	RUBBER-CD	IRR	
21	AJ59-20003F	DECK-CDP	DECK-CD *CMS-A30NG6	

7-3-2 Exploded View

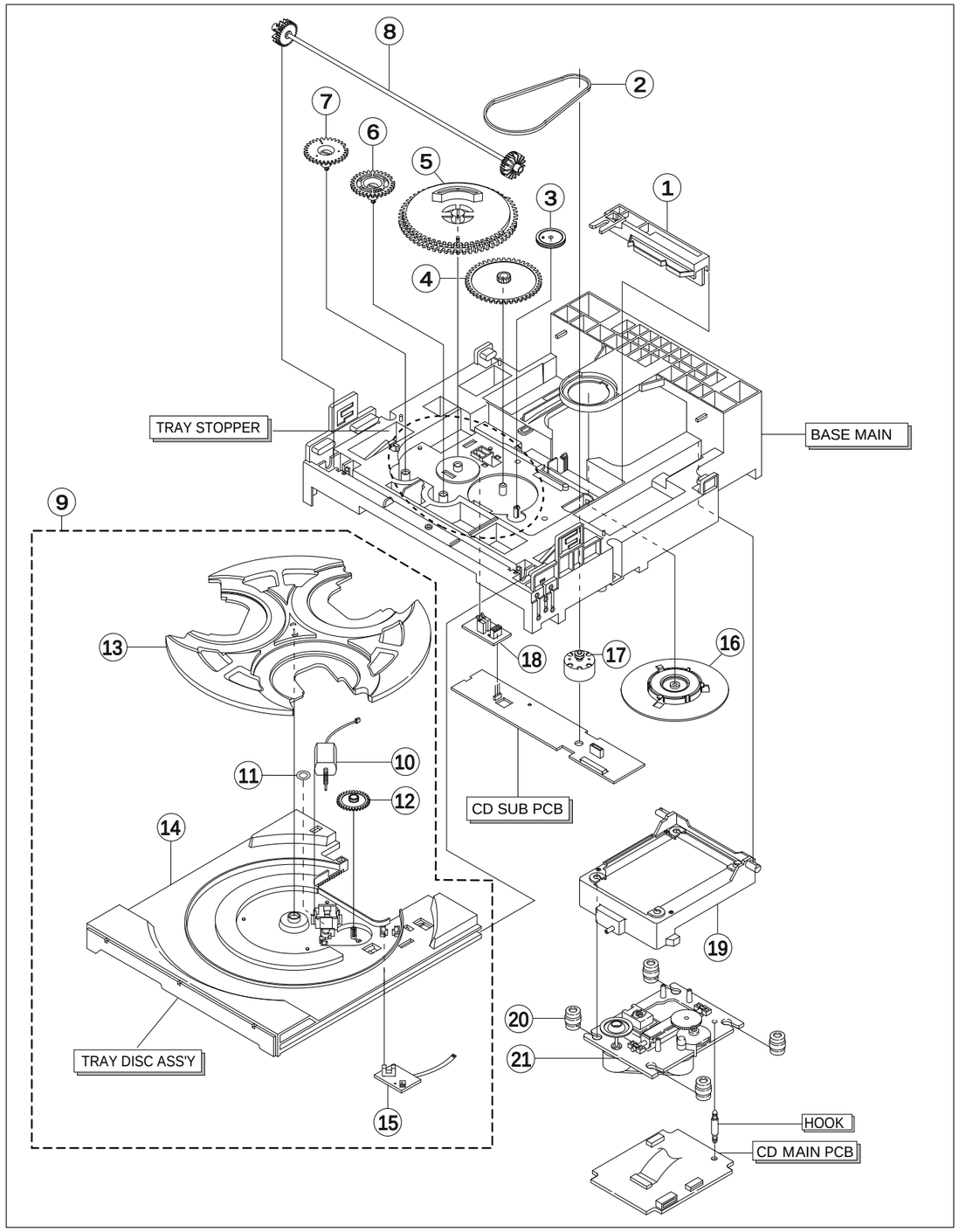

7-4 CD DECK

7-4-1 Parts List

No.	New Code No.	Description	Specification	Old Code No.
	CMSP30NM6	DECK -CD	BASIC	
1	AH61-10022C	CHASSIS-DECK(M)	CMSA30 POM M90-44	12001-0052-02
2	AH63-30048A	COVER-GEAR	CMS-V30 BLK ABS	13313-0057-00
3	AH66-20016A	GEAR(A)	CMS-V30 M0.3 Z13 SP POM	11474-0017-00
4	AH66-20017A	GEAR(B)	CMS-V30 M0.3 Z13 SP POM	11474-0018-00
5	AH66-20018A	GEAR(C)	CMS-V30 M0.3 Z16/Z90 SP POM	11474-0019-00
6	AH71-50036A	SHAFT-PU	CMS-V30 D3 L79 SUS420J2	11404-0041-00
7	15253-503-011	CENTER-RING	ABS+GS 20% CMS-V10N	15253-503-011
8	AH66-90018A	TURN-TABLE(M)	ABS+GS 20% CMS-V10N	12223-0003-00
9	AJ30-200013B	PICK-UP CDP	P/U SOH-A1 ROW V-P/J	*SOH-AP
10	AH61-60055A	SPRING-T/TABLE	CS STS-W PI0.4 D5.7 L9.3 CMS-V10N	12724-0062-00
11	AH31-10009A	MOTOR-SPINDLE	RF-310T-11400 43L 25V 85mA	16829-0004-00
12	AH31-10002B	MOTOR-FEED	RF-310TA 30MM NDM4RA3ETL 11.0MM	14769-057-250
13	AH60-10014A	SCREW-PH(+M2*3)	+M2X3 FE FZY W700	17008-120-032

7-2 Exploded View

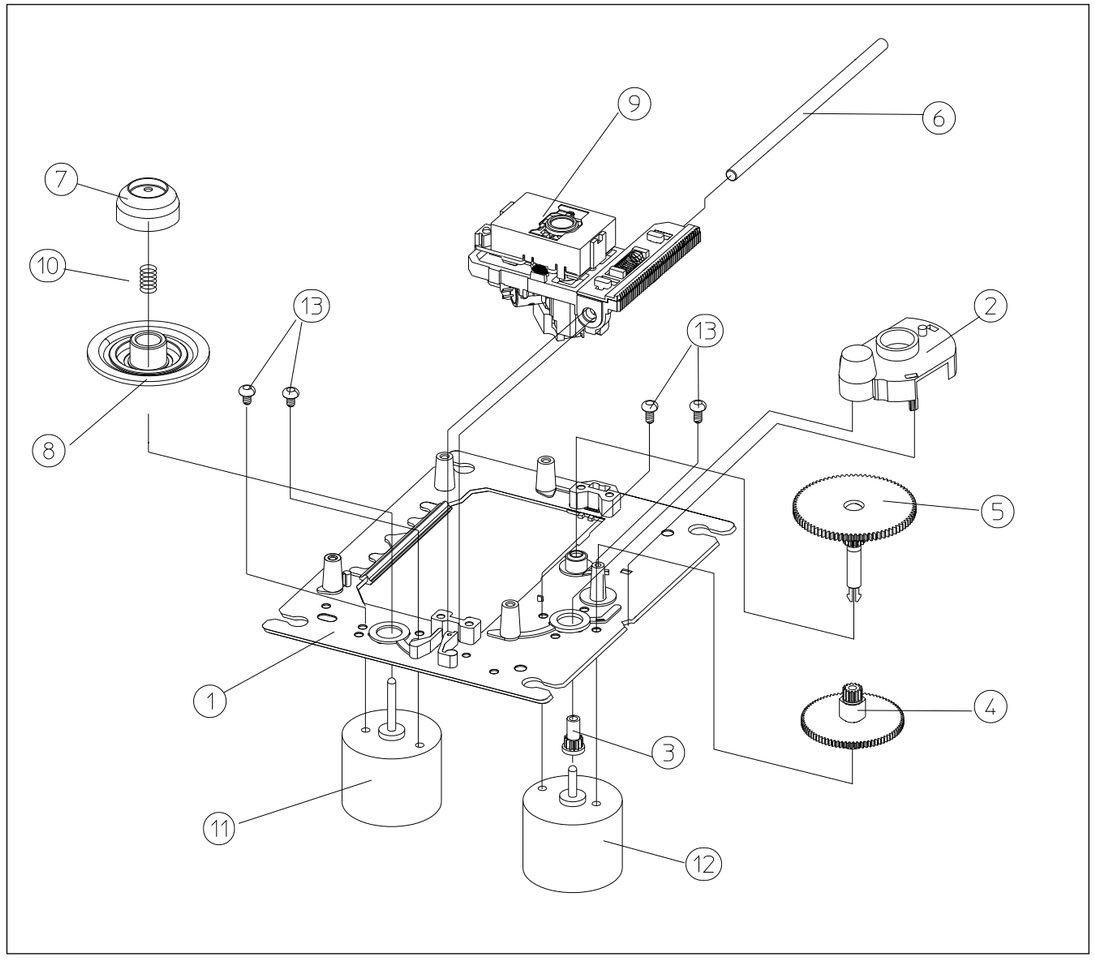

10-3 Only MAX-445 Power

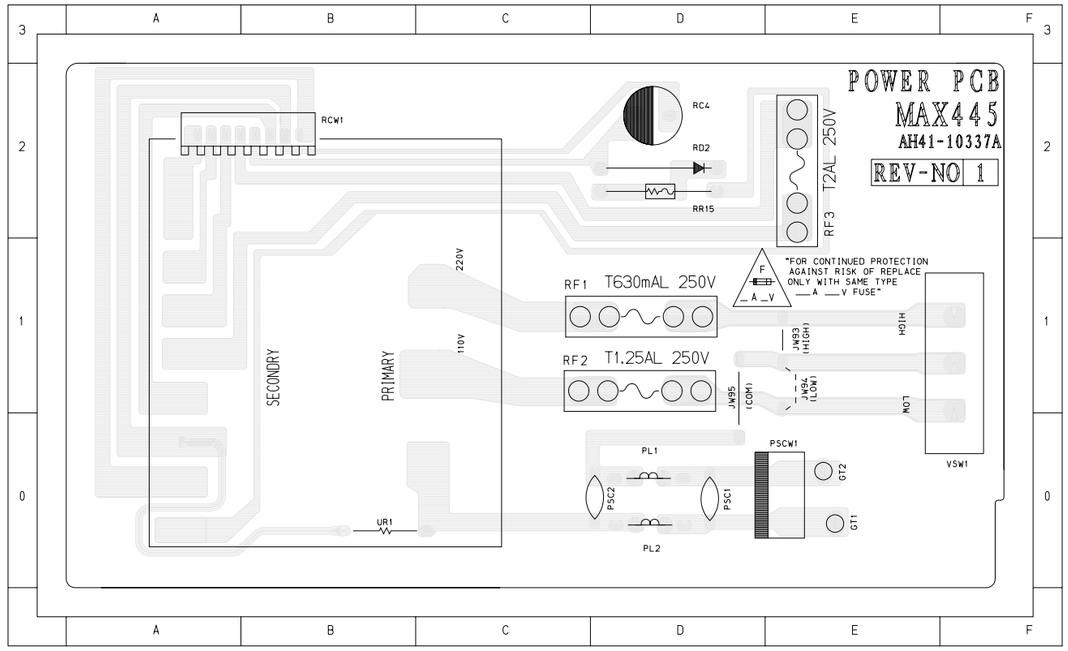

*** RESISTOR ***

RR15 (D2)
UR1 (B0)

*** CONDENSER ***

PSC1 (D0)
PSC2 (D0)
RC4 (D2)

*** DIODE ***

RD2 (D2)

*** IC&WAFER ***

RCW1 (B2)
VSW1 (F1)

10-4 Only MAX-455 Power

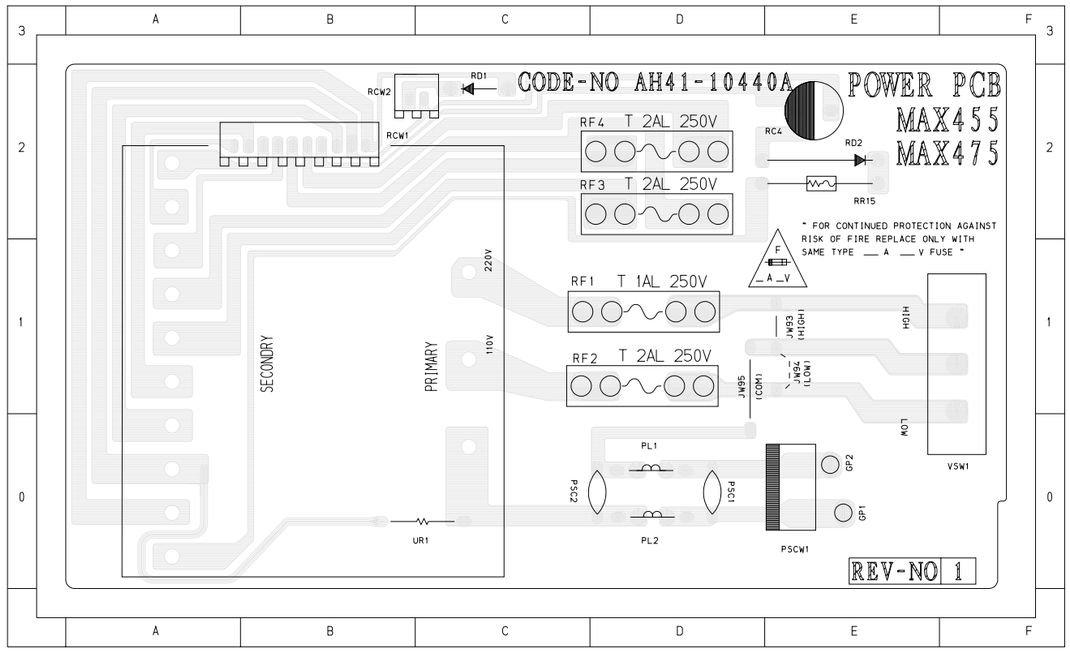

*** RESISTOR ***

RR15 (D2)
UR1 (B0)

*** CONDENSER ***

PSC1 (D0)
PSC2 (D0)
RC4 (E2)

*** DIODE ***

RD1 (C2)
RD2 (E2)

*** IC&WAFER ***

RCW1 (B2)
RCW2 (C2)
VSW1 (F1)

1. Precautions

Follow these safety, servicing and ESD precautions to prevent damage and protect against potential hazards such as electrical shock and X-rays.

1-1 Safety Precautions

1. Be sure that all of the built-in protective devices are replaced.

2. When reinstalling the chassis and its assemblies, be sure to restore all protective devices, including control knobs and compartment covers.

3. Make sure that there are no cabinet openings through which people--particularly children--might insert fingers and contact dangerous voltages. Such openings include the spacing between the picture tube and the cabinet mask, excessively wide cabinet ventilation slots, and improperly fitted back covers.

4. Design Alteration Warning:
   Never alter or add to the mechanical or electrical design of the unit. Example: Do not add auxiliary audio or video connectors. Such alterations might create a safety hazard. Also, any design changes or additions will void the manufacturer's warranty.

5. Leakage Current Hot Check (Figure 1-1):
   Warning: Do not use an isolation transformer during this test. Use a leakage-current tester or a metering system that complies with American National Standards Institute (ANSI C101.1, *Leakage Current for Appliances*), and Underwriters Laboratories (*UL Publication UL1410, 59.7*).

   With the unit completely reassembled, plug the AC line cord directly into a 120V AC outlet. With the unit's AC switch first in the ON position and then OFF, measure the current between a known earth ground (metal water pipe, etc.) and all exposed metal parts. Examples: Handle brackets, metal cabinets, screwheads and control shafts. The current measured should not exceed 0.5 milliamp. Reverse the power-plug prongs in the AC outlet and repeat.

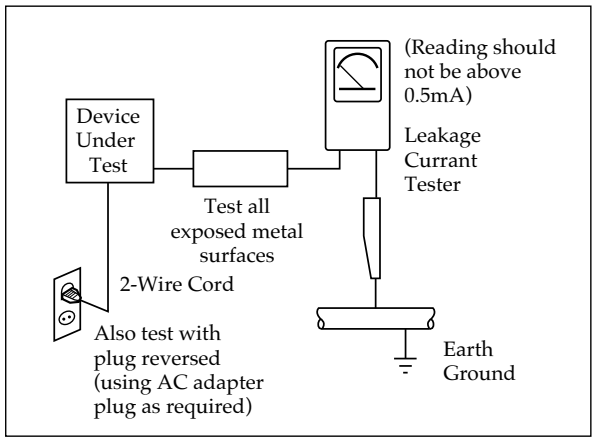

Fig. 1-1 AC Leakage Test

6. Insulation Resistance Cold Check:
   (1) With the unit's AC plug disconnected from the AC source, connect an electrical jumper across the two AC prongs. (2) Set the power switch to ON. (3) Measure the resistance between the shorted AC plug and any exposed metallic parts. Example: Screwheads, antenna, control shafts or handle brackets.

   If any of the exposed metallic parts has a return path to the chassis, the measured resistance should be between 1 and 5.2 megohms. If there is no return path, the measured resistance should be "infinite." If the resistance is outside these limits, a shock hazard might exist. See Figure 1-2

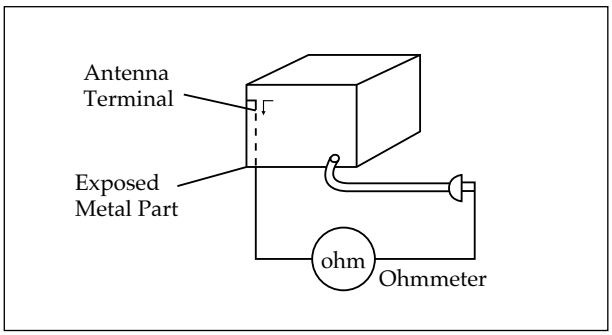

Fig. 1-2 Insulation Resistance Test

1-1 Safety Precautions (Continued)

7. Components, parts and wiring that appear to have overheated or that are otherwise damaged should be replaced with parts that meet the original specifications. Always determine the cause of damage or overheating, and correct any potential hazards

8. Observe the original lead dress, especially near the following areas: Antenna wiring, sharp edges, and especially the AC and high voltage power supplies. Always inspect for pinched, out-of-place, or frayed wiring. Do not change the spacing between components and the printed circuit board. Check the AC power cord for damage. Make sure that no wires or components touch thermally hot parts.

9. Product Safety Notice:
Some electrical and mechanical parts have special safety-related characteristics which might not be obvious from visual inspection. These safety features and the protection they give might be lost if the replacement component differs from the original--even if the replacement is rated for higher voltage, wattage, etc.

10 Components that are critical for safety are indicated in the circuit diagram by shading, ⚠ or ⚠ . Use replacement components that have the same ratings, especially for flame resistance and dielectric strength specifications. A replacement part that does not have the same safety characteristics as the original might create shock, fire or other hazards.

1-2 Servicing Precautions

Warning1: First read the "Safety Precautions" section of this manual. If some unforeseen circumstance creates a conflict between the servicing and safety precautions, always follow the safety precautions.

1. Servicing precautions are printed on the cabinet. Follow them.

2. Always unplug the unit's AC power cord from the AC power source before attempting to: (a) Remove or reinstall any component or assembly, (b) Disconnect an electrical plug or connector, (c) Connect a test component in parallel with an electrolytic capacitor.

3. Some components are raised above the printed circuit board for safety. An insulation tube or tape is sometimes used. The internal wiring may be clamped to prevent contact with thermally hot components. Reinstall all such elements to their original position.

4. After servicing, always check that the screws, components and wiring have been correctly reinstalled. Make sure that the portion around the serviced part has not been damaged.

5. Check the insulation between the blades of the AC plug and accessible conductive parts (examples: metal panels, input terminals and earphone jacks).

6. Insulation Checking Procedure: Disconnect the power cord from the AC source and turn the power switch ON. Connect an insulation resistance meter (500V) to the blades of the AC plug.

   The insulation resistance between each blade of the AC plug and accessible conductive parts (see above) should be greater than 1 megohm.

7. Never defeat any of the B+ voltage interlocks. Do not apply AC power to the unit (or any of its assemblies) unless all solid-state heat sinks are correctly installed.

8. Always connect a test instrument's ground lead to the instrument chassis ground *before* connecting the positive lead; always remove the instrument's ground lead last.

1-3 Precautions for Electrostatically Sensitive Devices (ESDs)

1. Some semiconductor ("solid state") devices are easily damaged by static electricity. Such components are called Electrostatically Sensitive Devices (ESDs). Examples include integrated circuits and some field-effect transistors. The following techniques will reduce the occurrence of component damage caused by static electricity.

2. Immediately before handling any semiconductor components or assemblies, drain the electrostatic charge from your body by touching a known earth ground. Alternatively, wear a discharging wrist-strap device. (Be sure to remove it prior to applying power--this is an electric shock precaution.)

3. After removing an ESD-equipped assembly, place it on a conductive surface such as aluminum foil to prevent accumulation of electrostatic charge.

4. Do not use freon-propelled chemicals. These can generate electrical charges that damage ESDs.

5. Use only a grounded-tip soldering iron when soldering or unsoldering ESDs.

6. Use only an anti-static solder removal device. Many solder removal devices are not rated as "anti-static" (these can accumulate sufficient electrical charge to damage ESDs).

7. Do not remove a replacement ESD from its protective package until you are ready to install it. Most replacement ESDs are packaged with leads that are electrically shorted together by conductive foam, aluminum foil or other conductive materials.

8. Immediately before removing the protective material from the leads of a replacement ESD, touch the protective material to the chassis or circuit assembly into which the device will be installed.

9. Minimize body motions when handing unpackaged replacement ESDs. Motions such as brushing clothes together, or lifting a foot from a carpeted floor can generate enough static electricity to damage an ESD.

1-4 Special Precautions and Warning Labels for Laser Products

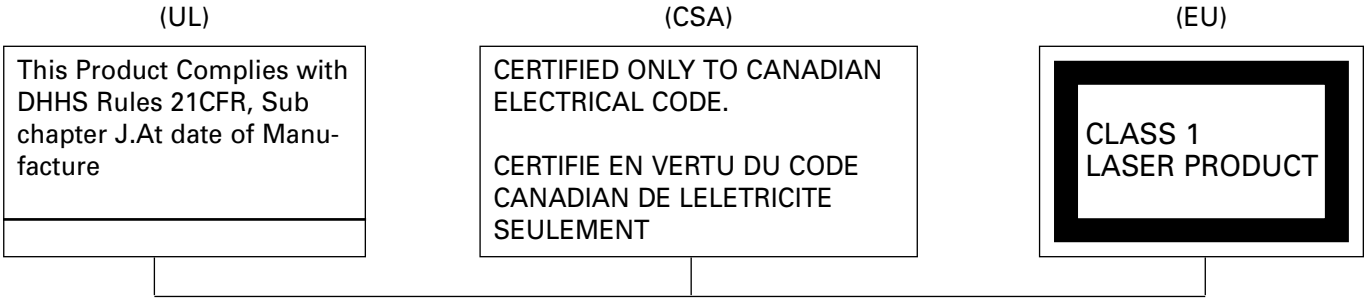

Fig. 1-3 Warning Labels (Location: Enclosure Block)

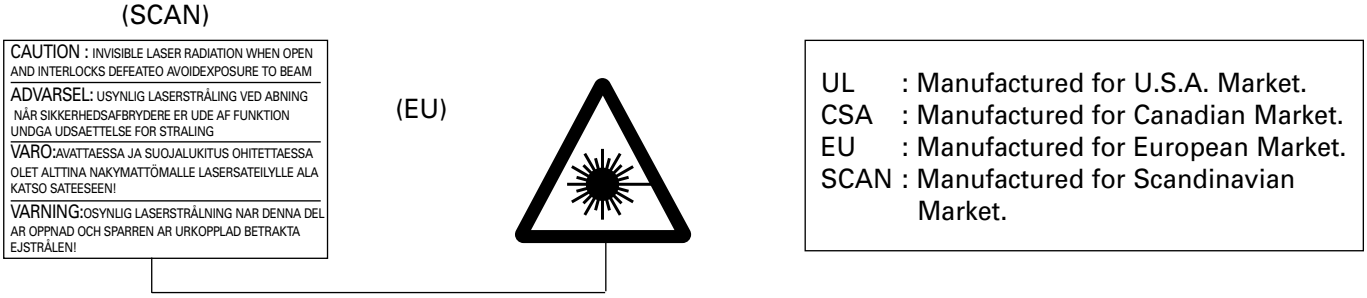

Fig. 1-4 Warning Labels (Location: Disc Clamper, Inner Side of Unit Door or Nearby Unit Chassis)

1-4 Special Precautions and Warning Labels for Laser Products (Continued)

1-4-1 Warnings

1. When servicing, do not approach the LASER exit with the eye too closely. In case it is necessary to confirm LASER beam emission, be sure to observe from a distance of more than 30 cm from the surface of the objective lens on the optical pick-up block.

2. Do not attempt to handle the objective lens when the DISC is not on the tray.

1-4-2 Laser Diode Specifications

Material: GaAs+ GaAlAs
Wavelength: 760-800 nm
Emission Duration: Continuous

Laser Output: 0.2 mw (measured at a 1.6 mm distance from the objective lens surface on the optical pick-up block.)

1-4-3 Handling the Optical Pick-up

1. Static electricity from clothing or the body may cause electrostatic breakdown of the laser diode in the Optical Pickup. Follow this procedure:

2. Place a conductive sheet on the work bench (i.e., the black sheet used for wrapping repair parts.) Note: The surface of the work bench should be covered by a copper ground plane, which is grounded.

3. The repair technician must wear a wrist strap which is grounded to the copper sheet.

4. To remove the Optical Pickup block: Place the set on the conductive sheet, and momentarily touch the conductive sheet with both hands. (While working, do not allow any electrostatic sources--such as clothes--to touch the unit.)

5. Ground the "Short Terminal" (located on the PCB, inside the Pickup Assembly) before replacing the Pickup. This terminal should be shorted whenever the Pickup Assembly is lifted or moved.

6. After replacing the Pickup, reopen the Short Terminal. See diagrams below:

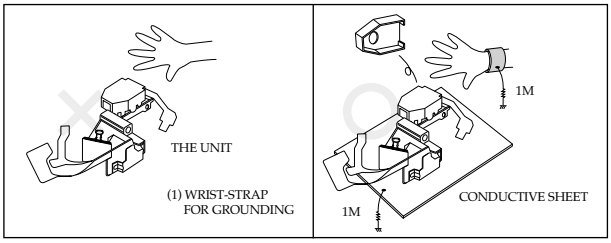

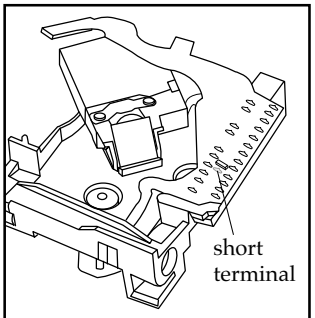

SOH91VI(LDP)

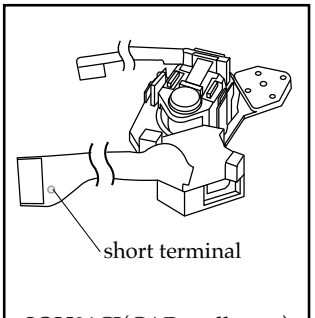

SOH91CI(CAR,walkman)

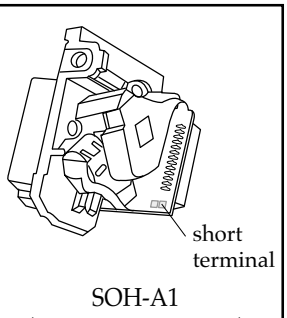

SOH-A1
(CMS-V10,CMS-V30)

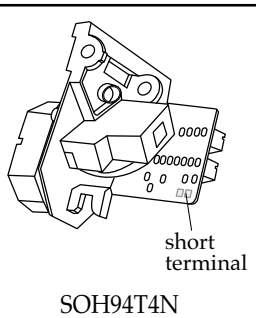

SOH94T4N
(CMS-V10,CMS-V30)

2. Specifications

General		Power source Power consumption (Option) Dimensions (mm)	230V 50Hz(Option) 90W (MAX-445) 150W (MAX-455) 270(W) x 315(H) x 335(D)
Amplifier		Power output (Option) Total harmonic distortion Frequency range Signal to noise ratio Channel separation Input sensitivity	20W/CH(6Ω) (MAX-445) 40W/CH(6Ω) (MAX-455) 0.5% 20Hz ~ 20kHz 75dB 50dB 400mV
Tuner	FM	Frequency range Usable sensitivity Signal to noise ratio IF rejection ratio Total harmonic distoration Separation (Stereo)	87.5 ~ 108MHz 8μV 55dB 60dB 0.7% 23dB
	MW (AM)	Frequency range Usable sensitivity Signal to noise ratio IF rejection ratio Total harmonic distortion	522 ~ 1611KHz 600μV 40dB 45dB 2%
	LW (OPTION)	Frequency range Usable sensitivity Signal to noise ratio	146 ~ 290KHz 1250μV 35dB
Cassette		Frequecny range WOW FLUTTER Erasing effect Signal to noise ratio Total harmonic distortion	125Hz ~ 8KHz 0.35% 55dB 45dB 2%
Compact Disc		Frequency response Signal to noise ratio Channel separation Total harmonic distortion	20Hz ~ 20KHz(¡ 1dB) 90dB(1kHz 0dB) 75dB(1kHz 0dB) 0.08%(1kHz 0dB)

* Specifications are subject to change without notice.

8. Electrical Parts List

Loc No.	New Code No.	Description	Specification	Old Code No.
AH90-10722F ASS'Y PCB MAIN; MAX445/455				
FD1,2,3,4,BD1,2,5,6,8	0401-000101	DIODE-SWITCHING;1N4148,100V,200MA,5		
JD1,4,5,6,7,HD1,2				
CD1,2,3,4,5,AD101,103				
RD6				
RD9,11,12,AD104	0402-000127	DIODE-RECTIFIER;1N4002,100V,1A,DO-4		A4104-0053
RD7,8,13	0402-000151	DIODE-RECTIFIER;1N5392,100V,1.5A,DO		12169-201-140
RD1	0402-000450	DIODE-BRIDGE;PBL403,200V,4.0A,DIP-4		12169-219-330
CZD2,3	0403-000354	DIODE-ZENER;UZ5.1B,5.1V,4.8-5.4V,50		12169-403-310
BZD1	0403-000374	DIODE-ZENER;UZ9.1BSC,9.1V,8.89-9.29		12169-404-840
RD5	0403-000377	DIODE-ZENER;UZP10B,10V,9.4-10.6V,1W		12169-403-240
RD3	0403-000389	DIODE-ZENER;UZP30B,30V,28-33V,1W,DO		A4106-0121
HZD1,RD16	0403-000394	DIODE-ZENER;UZP5.6B,5.6V,5.2-6.0V,1		12169-404-110
RD4	0403-000396	DIODE-ZENER;UZP6.8B,6.8V,6.4-7.2V,1		12169-404-100
IZD1	0403-000398	DIODE-ZENER;UZP8.2B,8.2V,7.7-8.7V,1		12169-403-600
LQ1L,1R,2L,2R	0501-000010	TR-SMALL SIGNAL;KSC1008-Y,NPN,80V,6		12149-301-050
FQ3,CQ6	0501-000294	TR-SMALL SIGNAL;KSA708-Y,PNP,800MW,		12149-101-560
CQ4	0501-000303	TR-SMALL SIGNAL;KSA733-Y,PNP,250MW,		12149-101-520
RQ1	0501-000331	TR-SMALL SIGNAL;KSC1009-Y,NPN,800MW		12139-301-310
FQ1,2	0501-000392	TR-SMALL SIGNAL;KSC838-O,NPN,250MW,		12149-301-860
FQ001,LQ6,AQ103L,103R	0501-000394	TR-SMALL SIGNAL;KSC900-L,NPN,250MW,		12149-301-840
HQ3,CQ5,8,BQ5,6,JQ1L,1R	0501-000398	TR-SMALL SIGNAL;KSC945-Y,NPN,250MW,		12149-301-900
CQ7	0501-000610	TR-SMALL SIGNAL;KSA928A-Y,PNP,1W,TO		
RQ2	0502-000148	TR-POWER;2SB1185,PNP,2W,TO-220FP,BK		B4052-0035
JQ2L,2R,3L,3R,8,CQ9,AQ102	0504-000121	TR-DIGITAL;KSR1007,NPN,300MW,22K-47		12159-301-800
JQ9L,9R,PQ2L,2R,CQ10	0504-000122	TR-DIGITAL;KSR1009Y,NPN,300MW,4.7K,		12159-301-790
CQ1,JQ4,5,6,AQ101,PQ1	0504-001003	TR-DIGITAL;KSR2003,PNP,300MW,22K-22		
RQ3				
ZIC1,BIC2	1201-000192	IC-OP AMP;4558,SIP,9P,-,DUAL,20V/MV		12119-401-630
JIC1	1201-000358	IC-PREAMP;22291,DIP,24P,-,DUAL,-,PL		A4012-0070
RIC1	1203-000166	IC-POSI.ADJUST REG.;3950,SIP,12P,-,		B4008-1198
BIC1	1204-000235	IC-VOLUME CONTROL;TDA7318,SOP,28P,-		B4008-1199
FR4	2001-000005	R-CARBON;390OHM,5%,1/8W,AA,TP,1.8X3		11018-877-391
JR9L,9R	2001-000008	R-CARBON;15KOHM,5%,1/8W,AA,TP,1.8X3		11018-877-153
LR3	2001-000032	R-CARBON;180OHM,5%,1/4W,AA,TP,2.4X6		11018-277-181
AR121,122	2001-000062	R-CARBON;470OHM,5%,1/4W,AA,TP,2.4X6		11018-277-471
RR7	2001-000066	R-CARBON(S);10KOHM,5%,1/2W,AA,TP,2.		11018-377-103
IR10	2001-000117	R-CARBON(S);68OHM,5%,1/2W,AA,TP,2.4		11018-377-680
IR14L,14R	2001-000241	R-CARBON;1.5KOHM,5%,1/8W,AA,TP,1.8X		11018-877-152
BR3L,3R,HR10,CR7	2001-000273	R-CARBON;100KOHM,5%,1/8W,AA,TP,1.8X		11018-877-104
FR17	2001-000281	R-CARBON;100OHM,5%,1/8W,AA,TP,1.8X3		11018-877-101
BR4,5L,5R,HR42,43,JR15,27	2001-000290	R-CARBON;10KOHM,5%,1/8W,AA,TP,1.8X3		11018-877-103
CR6,15,20,HR23,JR37,AR130				
SR1L,1R,35,37,JR17,29				
LR4,6,IR13	2001-000331	R-CARBON;12KOHM,5%,1/8W,AA,TP,1.8X3		11018-877-123
RR16	2001-000411	R-CARBON;18KOHM,5%,1/8W,AA,TP,1.8X3		11018-877-183
FR5,HR4,CR10,ZR10,IR11	2001-000429	R-CARBON;1KOHM,5%,1/8W,AA,TP,1.8X3.		11018-877-102
BR6L,6R,10,11,HR2				

Loc No.	New Code No.	Description	Specification	Old Code No.
RR3	2001-000435	R-CARBON;1MOHM,5%,1/8W,AA,TP,1.8X3.		11018-877-105
JR6L,6R,7L,7R,HR15,7	2001-000449	R-CARBON;2.2KOHM,5%,1/8W,AA,TP,1.8X		11018-877-222
AR124L,124R,PR2L,2R	2001-000449	R-CARBON;2.2KOHM,5%,1/8W,AA,TP,1.8X		11018-877-222
JR12L,12R,23L,23R	2001-000472	R-CARBON;2.7KOHM,5%,1/8W,AA,TP,1.8X		11018-877-272
FR3,ZR4L,4R,PR1L,1R				
JR22L,22R	2001-000508	R-CARBON;220KOHM,5%,1/8W,AA,TP,1.8X		11018-877-224
FR6,8,11,BR12,AR127L,127R	2001-000515	R-CARBON;220OHM,5%,1/8W,AA,TP,1.8X3		11018-877-221
CR4,12,13,17,AR129	2001-000522	R-CARBON;22KOHM,5%,1/8W,AA,TP,1.8X3		11018-877-223
JR32,36,AR101L,101R				
RR1				
IR4,LR5	2001-000527	R-CARBON;22OHM,5%,1/8W,AA,TP,1.8X3.		11018-877-220
RR15,ZR2L,2R	2001-000563	R-CARBON;27KOHM,5%,1/8W,AA,TP,1.8X3		11018-877-273
IR5,FR10,JR15R	2001-000591	R-CARBON;3.3KOHM,5%,1/8W,AA,TP,1.8X		11018-877-332
IR2,CR9,JR14L,14R	2001-000613	R-CARBON;3.9KOHM,5%,1/8W,AA,TP,1.8X		11018-877-392
IR7,RR6	2001-000666	R-CARBON;33OHM,5%,1/8W,AA,TP,1.8X3.		11018-877-330
CR11	2001-000689	R-CARBON;390KOHM,5%,1/8W,AA,TP,1.8X		11018-877-394
JR26,BR1L,1R	2001-000702	R-CARBON;39KOHM,5%,1/8W,AA,TP,1.8X3		11018-877-393
JR20	2001-000708	R-CARBON;39OHM,5%,1/8W,AA,TP,1.8X3.		11018-877-390
HR16,17,18,19,40,41,3	2001-000734	R-CARBON;4.7KOHM,5%,1/8W,AA,TP,1.8X		11018-877-472
CR3,16,BR3,IR3				
JR24L,24R,25L,25R				
JR01L,01R	2001-000745	R-CARBON;4.7OHM,5%,1/8W,AA,TP,1.8X3		11018-877-479
JR18	2001-000773	R-CARBON;470KOHM,5%,1/8W,AA,TP,1.8X		11018-877-474
CR8,BR7L,7R	2001-000780	R-CARBON;470OHM,5%,1/8W,AA,TP,1.8X3		11018-877-471
JR13L,13R,AR117	2001-000786	R-CARBON;47KOHM,5%,1/8W,AA,TP,1.8X3		11018-877-473
SR45,46	2001-000793	R-CARBON;47OHM,5%,1/8W,AA,TP,1.8X3.		11018-877-470
FR001,JR1L,1R,8,21,CR18	2001-000802	R-CARBON;5.6KOHM,5%,1/8W,AA,TP,1.8X		
BR2,8L,8R,13,IR6,12L,12R				
LR1L,1R,2L,2R,SR31,33				
FR18,AR104L,104R	2001-000857	R-CARBON;560OHM,5%,1/8W,AA,TP,1.8X3		11018-877-561
JR2L,2R,IR9,CR5	2001-000890	R-CARBON;6.8KOHM,5%,1/8W,AA,TP,1.8X		11018-877-682
HR5,ZR11	2001-000924	R-CARBON;680OHM,5%,1/8W,AA,TP,1.8X3		11018-877-681
JR19	2001-000938	R-CARBON;68OHM,5%,1/8W,AA,TP,1.8X3.		11018-877-680
IR1	2001-000977	R-CARBON;8.2KOHM,5%,1/8W,AA,TP,1.8X		11018-877-822
JR10L,10R,5	2001-000995	R-CARBON;820OHM,5%,1/8W,AA,TP,1.8X3		11018-877-821
AR115	2001-001000	R-CARBON;82KOHM,5%,1/8W,AA,TP,1.8X3		11018-877-823
JR11L,11R	2001-001006	R-CARBON;82OHM,5%,1/8W,AA,TP,1.8X3.		11018-877-820
HR6	2001-001077	R-CARBON(S);150OHM,5%,1/2W,AA,TP,2.		11018-377-151
AR105,106,132	2001-001088	R-CARBON(S);1KOHM,5%,1/2W,AA,TP,2.4		11018-377-102
AR108,110,111	2001-001093	R-CARBON(S);2.2KOHM,5%,1/2W,AA,TP,2		11018-377-222
AR120L,120R	2001-001146	R-CARBON(S);4.7OHM,5%,1/2W,AA,TP,2.		11018-377-479
AR109	2003-000549	R-METAL OXIDE(S);2.2KOHM,5%,1W,AA,T		11048-477-222
AR107,114	2008-000121	R-FUSIBLE;100OHM,5%,1/4W,AA,TP,2.6X		11058-223-101
JSVR15L	2103-000171	VR-SEMI;10KOHM,30%,1/10W,TOP		11249-102-034
CVR1	2103-000341	VR-SEMI;2KOHM,30%,1/10W,TOP		11249-102-104
IVR1	2103-000492	VR-SEMI;5KOHM,30%,1/10W,TOP		11249-102-024
HC12	2201-000247	C-CERAMIC,DISC;15PF,5%,50V,NPO,4X3.		11407-057-150
IC34	2201-000260	C-CERAMIC,DISC;180PF,10%,50V,SL,4*4		11407-018-181
HC7	2201-000300	C-CERAMIC,DISC;1NF,20%,50V,Y5T,4X4,		11417-329-102
RC104	2201-000381	C-CERAMIC,DISC;22NF,20%,50V,Y5V,8.0		11417-344-223

Loc No.	New Code No.	Description Specification	Old Code No.
HC11	2201-000423	C-CERAMIC,DISC;27PF,5%,50V,NPO,5.0X	11407-057-270
FC10	2201-000426	C-CERAMIC,DISC;27PF,5%,50V,SL,4X3.5	11407-017-270
BC28	2201-000432	C-CERAMIC,DISC;2PF,0.3PF,50V,NPO,5.	11407-052-209
RC100,101	2201-000520	C-CERAMIC,DISC;4.7NF,+80-20%,400VAC	11469-501-070
IC1,12,BC2,21,25	2201-000565	C-CERAMIC,DISC;47nF,20%,50V,Y5V,12.	11417-344-473
FC5,RC13		o	
RC102,103	2201-000783	C-CERAMIC,DISC;100NF,+80%,-20%,50V,	11417-104-104
IC19	2201-000946	C-CERAMIC,DISC;820PF,0.1,50V,Y5P,3.	
AC201L,201R,ZC4L,4R	2202-000263	C-CERAMIC,MLC-AXIAL;470PF,10%,50V,Y	11449-518-471
BC12L,12R,13L,13R	2202-000780	C-CERAMIC,MLC-AXIAL;100NF,+80-20%,5	11449-010-104
FC001,002,HC1,2,3,9,IC15	2202-000781	C-CERAMIC,MLC-AXIAL;100PF,10%,50V,Y	11449-518-101
JC7L,7R,8L,8R,16L,16R,BC4			
LC1L,1R,IC11,RC105			
HC6,AC101L,101R,120,121	2202-000796	C-CERAMIC,MLC-AXIAL;1NF,10%,50V,Y5P	11449-518-102
BC18,19,AC104L,104R	2202-000806	C-CERAMIC,MLC-AXIAL;220PF,10%,50V,Y	11449-518-221
FC4,8,9,IC31,32,CC3,6	2202-000807	C-CERAMIC,MLC-AXIAL;22NF,+80-20%,25	11448-010-223
JC12,BC24,AC109			
ZC10,11,JC100,SC14			
BC1L,1R	2202-000830	C-CERAMIC,MLC-AXIAL;82PF,10%,50V,Y5	11449-518-820
JC3L,3R	2202-000847	C-CERAMIC,MLC-AXIAL;1,8NF,0.3,50V,Y	
JC2L,2R,BC10L,10R	2202-000848	C-CERAMIC,MLC-AXIAL;1.5NF,0.3,50V,Y	
ZC3L,3R	2202-000850	C-CERAMIC,MLC-AXIAL;2.2NF,0.3,16V,Y	
IC8	2202-000854	C-CERAMIC,MLC-AXIAL;47NF,0.3,50V,Y5	
JC1L,1R	2301-000370	C-FILM,PEF;1.8NF,10%,50V,5.5X7X2.8M	
LC3,5	2301-000379	C-FILM,PEF;10NF,10%,50V,6X7X3.2MM,5	
IC29L,29R	2301-000385	C-FILM,PEF;12NF,10%,50V,6.5X8.5X3.2	
JC4L,4R	2301-000390	C-FILM,PEF;15NF,10%,50V,6.5X9X3.5MM	
JC5L,5R,11L,11R	2301-000393	C-FILM,PEF;18NF,10%,50V,6.5X12.5X3.	
LC2	2301-000400	C-FILM,PEF;1NF,10%,50V,5X7X2.8MM,5M	
BC15L,15R	2301-000407	C-FILM,PEF;2.7NF,10%,50V,5.5X7X3MM,	
JC18L,18R	2301-000428	C-FILM,PEF;3.9NF,5%,50V,5.5X12X3,3M	11505-713-392
IC21,22	2301-000430	C-FILM,PEF;33NF,10%,50V,7.5X11X4MM,	
IC18	2301-000442	C-FILM,PEF;4.7NF,10%,50V,5.5X7X3MM,	
IC2,9	2301-000449	C-FILM,PEF;47NF,10%,50V,8X11X4.5MM,	
JC18L,18R	2301-000453	C-FILM,PEF;5.6NF,10%,50V,5.5X7X3MM,	
AC114L,114R	2301-000469	C-FILM,PEF;68NF,10%,50V,9X12X4.5MM,	
JC13L,13R	2301-000475	C-FILM,PEF;8.2NF,5%,50V,6.5X12X3.5,	11505-713-822
JC25L,25R	2301-000476	C-FILM,PEF;82NF,10%,50V,10.5X12.5X6	11505-714-823
RC20	2401-000118	C-AL;1000UF,20%,10V,GP,10X12.5,5MM,	
LC4,IC10,AC131,JC26	2401-000240	C-AL;100UF,20%,10V,GP,6*11MM,5MM,TP	11608-102-104
CC10,AC110,RC15	2401-000303	C-AL;100UF,20%,25V,GP,6.3*11,2.5MM,	11608-104-104
IC3,14,13,JC23,CC2	2401-000419	C-AL;10UF,20%,16V,GP,5X11,5,-	
AC111	2401-000471	C-AL;10UF,20%,50V,BP,6X11MM,5MM,TP	
RC12,AC105,106	2401-000475	C-AL;10UF,20%,50V,GP,5*11,2MM,	11608-106-100
HC10	2401-000778	C-AL;220UF,20%,10V,GP,6.3X11,2.5MM,	11608-102-224
RC14,BC27,23	2401-000795	C-AL;220UF,20%,16V,GP,8X11.5,3.5MM,	
RC5	2401-000871	C-AL;220UF,20%,50V,GP,10X16MM,5MM,	11609-402-300
CC1,BC17	2401-000907	C-AL;22UF,20%,16V,GP,5*11,2MM,	11608-103-223
JC17L,17R	2401-001019	C-AL;3.3UF,20%,50V,GP,4X7,1.5MM,	
HC4,JC9L,9R,14L,14R	2401-001022	C-AL;3.3UF,20%,50V,GP,5*11,2MM,	11608-106-332

Loc No.	New Code No.	Description	Specification	Old Code No.
JC27L,27R				
JC24,10	2401-001102	C-AL;330UF,20%,16V,GP,8X11,-,		
ZC12,14	2401-001164	C-AL;33UF,20%,16V,GP,5*11,2MM,		11608-103-333
RC6	2401-001364	C-AL;470UF,20%,16V,GP,10X12MM,5MM,T		11608-103-471
JC6L,6R,15L,15R,22	2401-001465	C-AL;47UF,20%,10V,GP,5*11,2MM,		11608-102-473
AC107L,107R	2401-001538	C-AL;47UF,20%,25V,GP,6X11,2.5MM,-		
AC130	2401-001572	C-AL;47UF,20%,50V,GP,6.3*11,2.5MM,		11608-106-470
RC1,8,9,BC16,AC113L,113R	2401-001895	C-AL;100UF,20%,16V,GP,6.3X11MM,2.5M		
SC20,21				
IC6,7,20,23,24,CC5	2401-001912	C-AL;1UF,20%,50V,GP,5X11MM,2MM,BK		
AC127L,127R				
AC129	2401-001938	C-AL;22UF,20%,25V,GP,5X11MM,2MM,BK		
BC2L,2R,IC4,27L,27R	2401-001954	C-AL;4.7UF,20%,50V,GP,5X11MM,5,TP		
AC102,128,NO-LOCATION				
IC5	2401-001968	C-AL;470NF,20%,50V,GP,5X11MM,5,TP		
IC17,FC6	2401-001975	C-AL;47UF,20%,16V,GP,5X11MM,5,TP		
AC110	2401-002168	C-AL;100UF,0.2,50V,GP,10X12.5,5MM,T		
BC4L,4R,5L,5R,6L,6R,7L,7R	2401-002180	C-AL;2.2UF,0.2,50V,GP,5X11,5MM,TP		
BC8L,8R,11L,11R,14L,14R				
ZC13,1L,1R,SC1L,1R,6L,6R				
RL1	2701-000179	INDUCTOR-AXIAL;33UH,10%,4.2X9.8MM		12429-311-330
LL2	2701-000298	INDUCTOR-AXIAL;470UH,10%,4.2X9.8MM		12429-070-130
HX1	2801-000734	CRYSTAL-UNIT;7.2MHZ,50PPM,28-AAM,12		14539-501-140
ICF4	2802-000215	RESONATOR-CERAMIC;19KHZ,+-38HZ,-,7.		14539-504-100
ICF1	2903-000105	FILTER-CERAMIC;BP,10.7MHZ+-25KHZ		14529-301-753
ICF5	2903-000148	FILTER-CERAMIC;BP,450KHZ+-1KHZ		A1243-0049
MCW2	3710-001045	CONNECTOR-SOCKET;22P,1R,1.25MM,ANGL		
JCW501	3711-000588	CONNECTOR-HEADER;BOX,10P,1R,2.5MM,S		13349-103-103
JCW301	3711-000903	CONNECTOR-HEADER;BOX,3P,1R,2.5MM,ST		13349-527-502
JCW401	3711-003110	CONNECTOR-HEADER;BOX,4P,1R,2.5MM,ST		
AJ1	3716-000209	TERMINAL-BLOCK;,-,-,60V,7A		13303-500-620
AJ2	3722-000363	JACK-PHONE;9P,6.4MM,AU,BLK,-		A3040-0115
BJ1	3722-000377	JACK-RCA;4P/2C,3.5MM,SN,BLK,#16~22		A3040-0218
BR2L,2R,AR102L,102R	61048-177-563	R-CARBON;RD 1/8 T 563-J		
AR103L,103R				
HIC1	AH14-10007G	IC;LC72131,DIP,STICK PLL		
IIC1	AH14-10007H	IC;LA1836,DIP,STICK IF+MPX		
LPF1,2	AH26-10001A	TRANS-IF;FV-AD-BASE19K/38K,LOW PASS		12450-304-040
IFT1	AH26-10001E	TRANS-IF;KS940228-09,-,-,7.6X12.0,-		12619-030-005
LL1	AH26-10002G	TRANS-IF;IODT-N5002,BIAS-OSC,3.7MH,		12619-573-071
JL1L,1R	AH26-10002Y	COIL-TRAP;FB875-85A,BIAS-TRAP,35DB,		12429-306-113
IFT2	AH26-10020A	TRANS-DET;-,7KLL,DET,-,7.8MM,91PF,1		
FW1	AH39-50001H	LEAD-FASTEN;RING,1007#24,100MM,BLK		13059-201-103
TO CHASSIS	3811-000389	WIRE-NO SHEATH CU;SPCW,300V,52.4MM,		
JTP1	AH61-40022A	STUD-TAP;SPC1,T0.5,BT2,-,-,		13124-100-710

MIC PARTS(OPTION)

MD01,02,03,04,1,2,4,5	0401-000101	DIODE-SWITCHING;1N4148,100V,200MA,5		
MD50				
MZD1	0403-000393	DIODE-ZENER;UZP5.1B,5.1V,4.8-5.4V,1		12169-403-330

Loc No.	New Code No.	Description	Specification	Old Code No.
MZD2	0403-000399	DIODE-ZENER;UZP9.1B,9.1V,8.5-9.6V,1		12169-403-340
MQ50	0501-000394	TR-SMALL SIGNAL;KSC900-L,NPN,250MW,		12149-301-840
MQ1	0504-000121	TR-DIGITAL;KSR1007,NPN,300MW,22K-47		12159-301-800
MIC3	1201-000192	IC-OP AMP;4558,SIP,9P,-,DUAL,20V/MV		12119-401-630
MR50	2001-000003	R-CARBON;330OHM,5%,1/8W,AA,TP,1.8X3		11018-877-331
MR4,8	2001-000008	R-CARBON;15KOHM,5%,1/8W,AA,TP,1.8X3		11018-877-153
MR7	2001-000117	R-CARBON(S);68OHM,5%,1/2W,AA,TP,2.4		11018-377-680
MR3,11	2001-000221	R-CARBON;1.2KOHM,5%,1/8W,AA,TP,1.8X		11018-877-122
MR02L,02R	2001-000241	R-CARBON;1.5KOHM,5%,1/8W,AA,TP,1.8X		11018-877-152
MR05L,05R	2001-000273	R-CARBON;100KOHM,5%,1/8W,AA,TP,1.8X		11018-877-104
MR25,26	2001-000290	R-CARBON;10KOHM,5%,1/8W,AA,TP,1.8X3		11018-877-103
MR27,28	2001-000356	R-CARBON;150KOHM,5%,1/8W,AA,TP,1.8X		11018-877-154
MR6,9,23,24	2001-000429	R-CARBON;1KOHM,5%,1/8W,AA,TP,1.8X3.		11018-877-102
MR2,12	2001-000449	R-CARBON;2.2KOHM,5%,1/8W,AA,TP,1.8X		11018-877-222
MR1,13	2001-000508	R-CARBON;220KOHM,5%,1/8W,AA,TP,1.8X		11018-877-224
MR51	2001-000591	R-CARBON;3.3KOHM,5%,1/8W,AA,TP,1.8X		11018-877-332
MR5,10	2001-000734	R-CARBON;4.7KOHM,5%,1/8W,AA,TP,1.8X		11018-877-472
MR01L,01R	2001-000890	R-CARBON;6.8KOHM,5%,1/8W,AA,TP,1.8X		11018-877-682
MR30,31	2001-000924	R-CARBON;680OHM,5%,1/8W,AA,TP,1.8X3		11018-877-681
MVR1	2101-000274	VR-ROTARY;5KOHM,20%,1/20W,SIDE		B1050-0041
MC8,12	2201-000565	C-CERAMIC,DISC;47nF,20%,50V,Y5V,12.		11417-344-473
MC01,02	2202-000796	C-CERAMIC,MLC-AXIAL;1NF,10%,50V,Y5P		11449-518-102
MC7,20	2202-000809	C-CERAMIC,MLC-AXIAL;3.3NF,20%,16V,Y		11447-619-332
MC18	2401-000240	C-AL;100UF,20%,10V,GP,6*11MM,5MM,TP		11608-102-104
MC4,15	2401-000419	C-AL;10UF,20%,16V,GP,5X11,5,-		
MC50	2401-001355	C-AL;470UF,20%,10V,GP,8X11.5,5MM,		
MC3,16,36	2401-001465	C-AL;47UF,20%,10V,GP,5*11,2MM,		11608-102-473
MC9	2401-001895	C-AL;100UF,20%,16V,GP,6.3X11MM,2.5M		
MC5,6	2401-001919	C-AL;2.2UF,20%,50V,-,4X7MM,5,TP		
MC1,13,14,19	2401-002180	C-AL;2.2UF,0.2,50V,GP,5X11,5MM,TP		
MC41L,41R,42,43				
MCW3	3710-001046	CONNECTOR-SOCKET;10P,1R,1.25MM,ANGL		
MCW1	3711-001055	CONNECTOR-HEADER;BOX,6P,1R,2.5MM,ST		13349-512-565
MJ1,2	3722-000363	JACK-PHONE;9P,6.4MM,AU,BLK,-		A3040-0115
JR28L,28R	61048-177-563	R-CARBON;RD 1/8 T 563-J		
MIC1	AH14-10007F	IC;M62453SP,DIP,STICK VOCAL FADER/M		
MCON1	AH39-20010T	LEAD-CONNECTOR ASS'Y;5264,5395,6P,3		13078-496-135
JLW1	AH39-50001G	LEAD-FASTEN;,1007#24,350MM,BLK		13059-101-353
MTP1	AH61-40022A	STUD-TAP;SPC1,T0.5,BT2,-,-,		13124-100-710
MIC-WIRE	AH65-30013A	CLAMP-CORD;,-,DALA-2,-,		16634-517-300

SRS PARTS(OPTION)

SD1	0401-000101	DIODE-SWITCHING;1N4148,100V,200MA,5		
SQ3	0504-000121	TR-DIGITAL;KSR1007,NPN,300MW,22K-47		12159-301-800
SQ1,2	0504-000148	TR-DIGITAL;KSR2007,PNP,300MW,22K-47		12149-301-150
SIC3	1001-000111	IC-ANALOG SWITCH;GD4066B,BILATERAL		
SIC2	1201-000463	IC-OP AMP;074,SOP,14P,196MIL,SINGLE		
SR10	2001-000008	R-CARBON;15KOHM,5%,1/8W,AA,TP,1.8X3		11018-877-153
SR6,11	2001-000010	R-CARBON;68KOHM,5%,1/8W,AA,TP,1.8X3		11018-877-683
SR14	2001-000241	R-CARBON;1.5KOHM,5%,1/8W,AA,TP,1.8X		11018-877-152

Loc No.	New Code No.	Description	Specification	Old Code No.
SR17,23	2001-000273	R-CARBON;100KOHM,5%,1/8W,AA,TP,1.8X		11018-877-104
SR16,22	2001-000319	R-CARBON;120KOHM,5%,1/8W,AA,TP,1.8X		11018-877-124
SR28	2001-000411	R-CARBON;18KOHM,5%,1/8W,AA,TP,1.8X3		11018-877-183
SR27	2001-000472	R-CARBON;2.7KOHM,5%,1/8W,AA,TP,1.8X		11018-877-272
SR32,34	2001-000515	R-CARBON;220OHM,5%,1/8W,AA,TP,1.8X3		11018-877-221
SR18,24,29,30,39,41	2001-000522	R-CARBON;22KOHM,5%,1/8W,AA,TP,1.8X3		11018-877-223
SR26,42	2001-000613	R-CARBON;3.9KOHM,5%,1/8W,AA,TP,1.8X		11018-877-392
SR3,4,5,7,8,12	2001-000666	R-CARBON;33OHM,5%,1/8W,AA,TP,1.8X3.		11018-877-330
SR13	2001-000780	R-CARBON;470OHM,5%,1/8W,AA,TP,1.8X3		11018-877-471
SR19,25,40	2001-000786	R-CARBON;47KOHM,5%,1/8W,AA,TP,1.8X3		11018-877-473
SR15,38	2001-000995	R-CARBON;820OHM,5%,1/8W,AA,TP,1.8X3		11018-877-821
SR20,21	2001-001000	R-CARBON;82KOHM,5%,1/8W,AA,TP,1.8X3		11018-877-823
SC14	2202-000807	C-CERAMIC,MLC-AXIAL;22NF,+80-20%,25		11448-010-223
SC22	2301-000442	C-FILM,PEF;4.7NF,10%,50V,5.5X7X3MM,		
SC2,3	2401-001887	C-AL;100NF,20%,50V,-,4X7MM,5,TP		
SC4,5	2401-001919	C-AL;2.2UF,20%,50V,-,4X7MM,5,TP		
SC11	2401-001968	C-AL;470NF,20%,50V,GP,5X11MM,5,TP		
		USE ONLY MAX-445(POWER AMP PARTS)		
RD14,15	0402-000151	DIODE-RECTIFIER;1N5392,100V,1.5A,DO		12169-201-140
AIC101	1201-000327	IC-POWER AMP;4121,SIP,18P,-,-,-,PLA		12119-208-500
RR13,14	2001-000020	R-CARBON(S);22OHM,5%,1/2W,AA,TP,2.4		11018-377-220
RR2	2001-000062	R-CARBON;470OHM,5%,1/4W,AA,TP,2.4X6		11018-277-471
AR125L,125R	2001-000449	R-CARBON;2.2KOHM,5%,1/8W,AA,TP,1.8X		11018-877-222
ZR3L,3R	2001-000515	R-CARBON;220OHM,5%,1/8W,AA,TP,1.8X3		11018-877-221
RR11,12	2001-000611	R-CARBON;3.9KOHM,5%,1/4W,AA,TP,2.4X		11018-277-392
RR10	2001-000734	R-CARBON;4.7KOHM,5%,1/8W,AA,TP,1.8X		11018-877-472
RR5	2003-000650	R-METAL OXIDE(S);330OHM,5%,2W,AA,TP		11048-577-331
RC2,3	2401-001928	C-AL;2200UF,20%,35V,GP,16X31MM,7.5M		11607-105-222
RC7	2401-003116	C-AL;4700UF,20%,35V,-,18X35.5,7.5,B		
PCW1	3711-001137	CONNECTOR-HEADER;BOX,8P,1R,2MM,STRA		13349-119-080
RCON1	AH39-20515A	LEAD CONNECTOR-ASSY;-,5264,51088,8P		
HEAT-SINK	AH62-30017A	HEAT SINK;AL,-,-,-,-,-,MAX445,-		11122-0073-00
		TUNER OPTION PARTS(T/L-BAND)		
FR13	2001-000411	R-CARBON;18KOHM,5%,1/8W,AA,TP,1.8X3		11018-877-183
FR14	2001-000522	R-CARBON;22KOHM,5%,1/8W,AA,TP,1.8X3		11018-877-223
BC3	2201-000247	C-CERAMIC,DISC;15PF,5%,50V,NPO,4X3.		11407-057-150
BC26	2202-000807	C-CERAMIC,MLC-AXIAL;22NF,+80-20%,25		11448-010-223
ICF3	2903-000105	FILTER-CERAMIC;BP,10.7MHZ+-25KHZ		14529-301-753
FJ1	3716-000201	TERMINAL-BLOCK;NON SOLDER,4P,4MM,-,		A3059-0006
BL1	AH27-80060A	COIL-OSC;RBW07VB,345UH,AM+RF		
FP1	AH40-10025A	TUNER-FM;FTA4-551H,4G,75OHM		

Loc No.	New Code No.	Description	Specification	Old Code No.
		USE ONLY MAX455(POWER AMP PARTS)		
FFQ2	0501-000398	TR-SMALL SIGNAL;KSC945-Y,NPN,250MW,		12149-301-900
FFQ1	0502-000241	TR-POWER;KSA614,PNP,25W,TO-220,BK,4		12139-103-560
AIC102	1201-000192	IC-OP AMP;4558,SIP,9P,-,DUAL,20V/MV		12119-401-630
AIC101	1201-000328	IC-POWER AMP;4141,SIP,18P,-,-,-,PLA		12119-208-080
RR5,PIPE	13954-100-310	CERAMIC-PIPE;PI1.4 15MM WHT		
THERMISTOR	1404-000172	THERMISTOR-NTC;100OHM,-,-,-,BK		
RR11	2001-000052	R-CARBON(S);3.3KOHM,5%,1/2W,AA,TP,2		11018-377-332
RR12	2001-000060	R-CARBON;6.8KOHM,5%,1/4W,AA,TP,2.4X		11018-277-682
RR2	2001-000116	R-CARBON;820OHM,5%,1/4W,AA,TP,2.4X6		11018-277-821
AR202L,202R	2001-000241	R-CARBON;1.5KOHM,5%,1/8W,AA,TP,1.8X		11018-877-152
AR204	2001-000281	R-CARBON;100OHM,5%,1/8W,AA,TP,1.8X3		11018-877-101
AR201L,201R	2001-000290	R-CARBON;10KOHM,5%,1/8W,AA,TP,1.8X3		11018-877-103
ZR3L,3R	2001-000362	R-CARBON;150OHM,5%,1/8W,AA,TP,1.8X3		11018-877-151
AR125L,125R	2001-000429	R-CARBON;1KOHM,5%,1/8W,AA,TP,1.8X3.		11018-877-102
AR203L,203R,FFR4	2001-000449	R-CARBON;2.2KOHM,5%,1/8W,AA,TP,1.8X		11018-877-222
FFR1	2001-000522	R-CARBON;22KOHM,5%,1/8W,AA,TP,1.8X3		11018-877-223
RR10,FFR3	2001-000613	R-CARBON;3.9KOHM,5%,1/8W,AA,TP,1.8X		11018-877-392
FFR2	2001-000734	R-CARBON;4.7KOHM,5%,1/8W,AA,TP,1.8X		11018-877-472
RR5	2003-000703	R-METAL OXIDE(S);470OHM,5%,3W,AA,TP		
FFR5	2003-000710	R-METAL OXIDE(S);47OHM,5%,2W,AA,TP,		11048-577-470
FFC1	2401-000871	C-AL;220UF,20%,50V,GP,10X16MM,5MM,		11609-402-300
RC2,3	2401-001067	C-AL;3300UF,20%,42V,GP,18*35.5,7.5M		11609-116-332
BC20	2401-001975	C-AL;47UF,20%,16V,GP,5X11MM,5,TP		
RC7	2401-003116	C-AL;4700UF,20%,35V,-,18X35.5,7.5,B		
FFCW3	3711-000820	CONNECTOR-HEADER;BOX,2P,1R,2.5MM,ST		13349-512-561
PCW1	3711-001137	CONNECTOR-HEADER;BOX,8P,1R,2MM,STRA		13349-119-080
PJW3	3811-000389	WIRE-NO SHEATH CU;SPCW,300V,52.4MM,		
FFIC3	AH14-10003E	IC;KIA7812PI,-,TO-220		
FAN	AH31-10020A	FAN-DC;D0620B-12M,12VDC/0.16A,		A3070-0112
FFCW2	AH39-20008M	LEAD-CONNECTOR ASS'Y;5264,5395,2P,1		13078-472-115
FFCW5	AH39-20019M	LEAD-CONNECTOR ASS'Y;5051,5395,3P,2		16439-0124-00
RCON1	AH39-20514A	LEAD CONNECTOR-ASSY;-,5264,51088,10		
HEAT-SINK	AH62-30017A	HEAT SINK;AL,-,-,-,-,-,MAX445,-		11122-0073-00
		TUNER OPTION PARTS(L-BAND)		
FR13	2001-000411	R-CARBON;18KOHM,5%,1/8W,AA,TP,1.8X3		
FR14	2001-000522	R-CARBON;22KOHM,5%,1/8W,AA,TP,1.8X3		
BC3	2201-000223	C-CERAMIC,DISC;12PF,5%,50V,NPO,		
AC116L,116R	2201-000381	C-CERAMIC,DISC;22NF,20%,50V,Y5V,8.0		
AC115L,115R,116L,116R	2201-000547	C-CERAMIC,DISC;4.7NF,20%,500V,Y5T,		
AC117L,117R	2201-000783	C-CERAMIC,DISC;100NF,+80%,-20%,50V		
AC122,123	2202-000796	C-CERAMIC,MLC-AXIAL;1NF,10%,50V,Y5P		
BC26	2301-000411	C-FILM,PEF;220NF,5%,50V,-,-,BK		
TUNER LOCATION-N	2401-001975	C-AL;47UF,20%,16V,GP,5X11MM		
AJW1,2	2701-000111	INDUCTOR-AXIAL;100UH,10%,2.5X3.4MM		
ICF2,3	2903-000102	FILTER-CERAMIC;BP,10.7MHZ+-25KHZ		
FJ1	3716-000198	TERMINAL-BLOCK;NON SOLDER,3P,4MM		
IL1	AH27-10001K	COIL-CHOKE;10MH,K,Q10,-,-,CL-3		
BL1	AH27-80060B	COIL-OSC;RBQ-07VB,393UH,MW/LW-RF		
AL101L.101R,RJW36,37	AH27-90001A	COIL-SPRING;2.2UH,-,-,SPRING		

Loc No.	New Code No.	Description	Specification	Old Code No.
FP1	AH40-10025E	TUNER-FM;FTA4-460H,4G,750HM		
AJ1	AH63-40009A	SHIELD-PLATE;TE-SBC,T0.3,-,SCM8100L		

AH90-10619A ASS'Y-PCB FRONT ; MAX445/455

UD1,2,3,4,50,51,53	0401-000101	DIODE-SWITCHING;1N4148,100V,200MA,5	
UD40,41,42,43,55,56			
UZD1	0403-000344	DIODE-ZENER;UZ3.9B,3.9V,3.7-4.1V,50	12169-403-490
UQ9	0501-000294	TR-SMALL SIGNAL;KSA708-Y,PNP,800MW,	12149-101-560
UQ1,10	0501-000398	TR-SMALL SIGNAL;KSC945-Y,NPN,250MW,	12149-301-900
UQ30,31,32	0504-000118	TR-DIGITAL;KSR1003,NPN,300MW,22K-22	12159-301-780
UQ17	0504-000121	TR-DIGITAL;KSR1007,NPN,300MW,22K-47	12159-301-800
UQ3,4,5,6,7,8,11,12,16	0504-000122	TR-DIGITAL;KSR1009Y,NPN,300MW,4.7K,	12159-301-790
UQ2	0504-001003	TR-DIGITAL;KSR2003,PNP,300MW,22K-22	
UD16,17,18,19,22,23	0601-000141	LED;ROUND,GRN,3.1MM,555NM	A4150-0290
UD5,6,7,26,27,28,29,30,31			
UD20,21,24	0601-000185	LED;ROUND,ORG,3.1MM,610NM	A4150-0288
UD38	0601-000245	LED;ROUND,RED,3.1MM,650NM	12309-001-450
UR82,84,86,97	2001-000003	R-CARBON;330OHM,5%,1/8W,AA,TP,1.8X3	11018-877-331
UR26,27,36,37	2001-000241	R-CARBON;1.5KOHM,5%,1/8W,AA,TP,1.8X	11018-877-152
UR61,62,63	2001-000273	R-CARBON;100KOHM,5%,1/8W,AA,TP,1.8X	11018-877-104
UR5,6,7,8,51,52,53,54	2001-000290	R-CARBON;10KOHM,5%,1/8W,AA,TP,1.8X3	11018-877-103
UR55,56,57,58,59,60,65			
UR66,68			
UR73	2001-000325	R-CARBON;120OHM,5%,1/8W,AA,TP,1.8X3	11018-877-121
UR71,72,74,46,47,48	2001-000362	R-CARBON;150OHM,5%,1/8W,AA,TP,1.8X3	11018-877-151
UR98	2001-000405	R-CARBON;180OHM,5%,1/8W,AA,TP,1.8X3	
UR24,25,34,35,79	2001-000429	R-CARBON;1KOHM,5%,1/8W,AA,TP,1.8X3.	11018-877-102
UR15,16,17,18,106			
UR1,11,12,13,14,28,38	2001-000449	R-CARBON;2.2KOHM,5%,1/8W,AA,TP,1.8X	11018-877-222
UR69,70,99,107,108,109			
UR110,111,112,113,105			
UR19,20,100,101,102			
UR103,104			
UR29,39	2001-000472	R-CARBON;2.7KOHM,5%,1/8W,AA,TP,1.8X	11018-877-272
UR3	2001-000508	R-CARBON;220KOHM,5%,1/8W,AA,TP,1.8X	11018-877-224
UR64	2001-000554	R-CARBON;270OHM,5%,1/8W,AA,TP,1.8X3	11018-877-271
UR30,40	2001-000591	R-CARBON;3.3KOHM,5%,1/8W,AA,TP,1.8X	11018-877-332
UR50	2001-000613	R-CARBON;3.9KOHM,5%,1/8W,AA,TP,1.8X	11018-877-392
UR87,88,89,90,91,92	2001-000734	R-CARBON;4.7KOHM,5%,1/8W,AA,TP,1.8X	11018-877-472
UR95,96,81,2,93,94			
UR80	2001-000786	R-CARBON;47KOHM,5%,1/8W,AA,TP,1.8X3	11018-877-473
UR4	2001-000793	R-CARBON;47OHM,5%,1/8W,AA,TP,1.8X3.	11018-877-470
UR83,85	2001-000857	R-CARBON;560OHM,5%,1/8W,AA,TP,1.8X3	11018-877-561
UR49	2001-000890	R-CARBON;6.8KOHM,5%,1/8W,AA,TP,1.8X	11018-877-682
UR21,31	2001-000924	R-CARBON;680OHM,5%,1/8W,AA,TP,1.8X3	11018-877-681
UR22,23,32,33	2001-000995	R-CARBON;820OHM,5%,1/8W,AA,TP,1.8X3	11018-877-821
UC13,14	2201-000247	C-CERAMIC,DISC;15PF,5%,50V,NPO,4X3.	11407-057-150
UC7,8	2201-000423	C-CERAMIC,DISC;27PF,5%,50V,NPO,5.0X	11407-057-270
UC2,11,12,15,22,24,9	2201-000565	C-CERAMIC,DISC;47nF,20%,50V,Y5V,12.	11417-344-473
UC32,33,35,36,37,38,39	2202-000807	C-CERAMIC,MLC-AXIAL;22NF,+80-20%,25	11448-010-223
UC10,40	2401-000240	C-AL;100UF,20%,10V,GP,6*11MM,5MM,TP	11608-102-104
UC5	2401-000778	C-AL;220UF,20%,10V,GP,6.3X11,2.5MM,	11608-102-224
UC20	2401-001572	C-AL;47UF,20%,50V,GP,6.3*11,2.5MM,	11608-106-470
UC21,23	2401-001904	C-AL;10UF,20%,16V,-,4X7MM,5,TP	

Loc No.	New Code No.	Description	Specification	Old Code No.
UC19	2401-001912	C-AL;1UF,20%,50V,GP,5X11MM,2MM,BK		
UC4	2401-001931	C-AL;220NF,20%,50V,-,4X7MM,5,TP		
UC1,53,54	2401-001952	C-AL;4.7UF,20%,50V,-,4X7MM,5,TP		
UC6	2409-000123	C-EDL;47000UF,4UA,5.5V,-,-,5MM,BK		B1104-0540
UX1	2801-001382	CRYSTAL-UNIT;12MHZ,50PPM,28-AAM,10P		A1280-0017
UX2	2801-001394	CRYSTAL-UNIT;32.768KHZ,20PPM,28-AAY		14539-502-350
UVR1,2	3406-000162	SWITCH-ROTARY;5V,50MA,SPDT,20MM		A3012-0018
UCW3	3708-000303	CONNECTOR-FPC/FC/PIC;6P,1.25MM,STRA		B6010-0352
UCW3-1	3708-000448	CONNECTOR-FPC/FC/PIC;6P,1.25MM,STRA		B6010-1610
UCW4	3708-001033	CONNECTOR-FPC/FC/PIC;22P,1.25MM,STR		
UCW1	3711-003104	CONNECTOR-HEADER;NOWALL,22P,1R,1.25		
UCW3-UCW3-1	3809-000199	CABLE-FLAT;30V,80C,300MM,6P,1.25MM,		B6032-0072
FLT1	AH07-20045C	VF-DISPLAY;SVA-10SS06,-,104.14X25,M		
UIC1	AH09-10004H	IC-MCU;LC866224-5D66,-,QFP,-,-		B4002-0867
UIC2	AH14-10004M	IC;NJU3713G,SOP,TAPE 18P		
UE1	AH59-60001J	MODULE-REMOCON;GP1U271R,38KHZ,-,MES		B1294-0043
FLT-HOLDER	AH61-20080A	HOLDER-FLT;ABS,94HB,BLK,-,SCM-7450,		13322-0146-00
UD11,8	0401-000101	DIODE-SWITCHING;1N4148,100V,200MA,5		
UCW2(OPTION)	3711-003097	CONNECTOR-HEADER;NOWALL,10P,1R,1.25		

AH90-10649B ASS'Y PCB POWER ; MAX445

RD2	0402-000127	DIODE-RECTIFIER;1N4002,100V,1A,DO-4		A4104-0053
RR15	2008-000001	R-FUSIBLE;1OHM,5%,1/4W,AA,TP,2.6X6.		11058-277-109
PSC1,2	2201-000520	C-CERAMIC,DISC;4.7NF,+80-20%,400VAC		11469-501-070
RC4	2401-002168	C-AL;100UF,0.2,50V,GP,10X12.5,5MM,T		
RF3	3601-000248	FUSE-FERRULE;250V,2A,TIME LAG,GLASS		14709-241-250
RF3	3602-000147	FUSE-CLIP;250V,7.5A,30MOHM		13164-101-913
PSCW1	3711-000190	CONNECTOR-HEADER;1WALL,2P,1R,7.92MM		13349-156-020
RCW1	3711-001128	CONNECTOR-HEADER;BOX,8P,1R,2.5MM,AN		13349-102-080
PL1,2	AH27-10001F	COIL-CHOKE;27UH,K,Q30,-,-,DR(6.5*7.		12429-010-330
RF1(OPTION)	3601-000304	FUSE-FERRULE;250V,630MA,TIME LAG,GL		14709-241-160
RF2(OPTION)	3601-000162	FUSE-FERRULE;250V,1.25A TIME LAG,GL		
RF1(OPTION)	3602-000147	FUSE-CLIP;250V,7.5A,30MOHM		13164-101-913
P/T(OPTION)	AH26-80140C	TRANS-POWER;EI66X45,115/230V,60/50H		
P/T(OPTION)	AH26-80140U	TRANS-POWER;EI66X45,110/220V 60/50HZ		
POWER-CORD(OPTION)	AH39-10002L	POWER CORD;CP2,KLCE-2F,2.15M,5239,V		A6006-0187
POWER-CORD(OPTION)	AH39-10002F	POWER-CORD;BS,GTBS-2F,2.5M,5239,BS		
POWER-CORD(OPTION)	AH39-10001S	POWER-CORD;EP2,STP#2/18,2M,SOLDERING		
VSW1(OPTION)	3408-000163	SWITCH-SLIDE;250V,3A,SPDT		
VSW1(OPTION)	3408-000165	SWITCH-SLIDE;250V,3A,SPDT		

AH90-10620A ASS'Y PCB POWER ; MAX455

Loc No.	New Code No.	Description	Specification	Old Code No.
RD1,5	0402-000127	DIODE-RECTIFIER;1N4002,100V,1A,DO-4		A4104-0053
RR15	2008-000001	R-FUSIBLE;1OHM,5%,1/4W,AA,TP,2.6X6.		11058-277-109
PSC1,2	2201-000520	C-CERAMIC,DISC;4.7NF,+80-20%,400VAC		11469-501-070
RC4	2401-002168	C-AL;100UF,0.2,50V,GP,10X12.5,5MM,T		
RF3,4	3601-000248	FUSE-FERRULE;250V,2A,TIME LAG,GLASS		14709-241-250
RF3,4/HOLDER	3602-000147	FUSE-CLIP;250V,7.5A,30MOHM		13164-101-913
PSCW1	3711-000190	CONNECTOR-HEADER;1WALL,2P,1R,7.92MM		13349-156-020
RCW1	3711-000586	CONNECTOR-HEADER;BOX,10P,1R,2.5MM,A		A6010-0388
RCW2	3711-000814	CONNECTOR-HEADER;BOX,2P,1R,2.5MM,AN		13349-511-573
PL1,2	AH27-10001F	COIL-CHOKE;27UH,K,Q30,-,-,DR(6.5*7.		12429-010-330
RF2(OPTION)	3601-000248	FUSE-FERRULE;250V,2A,TIME LAG,GLASS		
RF1(OPTION)	3601-000207	FUSE-FERRULE;250V,1A,TIME LAG,GLASS		14709-241-200
RF1(OPTION)	3602-000147	FUSE-CLIP;250V,7.5A,30MOHM		13164-101-913
P/T(OPTION)	AH26-80140D	TRANS-POWER;EI74X52,220V,60/50HZ,MA		
POWER-CORD(OPTION)	AH39-10002L	POWER CORD;CP2,KLCE-2F,2.15M,5239,V		A6006-0187
P/T(OPTION)	AH26-80141C	TRANS-POWER ; EI74X52 115/230V 60/50HZ		

Loc No.	New Code No.	Description	Specification	Old Code No.
G3A8-3N/C		ASSY CD PACK; G3A8-3N CKD		
AH90-10346M		ASSY-PCB CD MAIN;G3A8,CKD		
ND200,201,202,203	0401-000101	DIODE-SWITCHING;1N4148,100V,200MA,5		
NZD101	0403-000361	DIODE-ZENER;UZ6.2BSB,6.2V,5.99-6.24		12169-404-800
NQ1502	0501-000323	TR-SMALL SIGNAL;KSB564Y,PNP,800MW,T		12149-202-050
NQ1501	0501-000610	TR-SMALL SIGNAL;KSA928A-Y,PNP,1W,TO		
NIC9282	0904-000157	IC-DSP;9282,-,QFP,80P,-,16.9344MHZ,		A4012-0291
NIC9258	1003-000179	IC-MOTOR DRIVER;KA9258D,SOP,28P,-,S		
NIC9270	1204-000110	IC-AUDIO FILTER;KA9270,SOP,20P,-,PL		A4012-0089
NIC9220	1204-001041	IC-ASP;KA9220B,QFP,80P,-,PLASTIC,6V		
NR605	2007-000001	R-CHIP;68KOHM,5%,1/10W,DA,TP,2012		11119-101-683
NR606,611,608,609,610	2007-000029	R-CHIP;0OHM,5%,1/10W,DA,TP,2012		11119-101-000
NR47L,47R,104,203,NRD	2007-000282	R-CHIP;100KOHM,5%,1/10W,DA,TP,2012		11119-101-104
NR106,107	2007-000338	R-CHIP;120KOHM,5%,1/10W,DA,TP,2012		11119-101-124
NR41L,41R,204,191,100	2007-000355	R-CHIP;12KOHM,5%,1/10W,DA,TP,2012		11119-101-123
NR190				
NR103,119	2007-000395	R-CHIP;150KOHM,5%,1/10W,DA,TP,2012		11119-101-154
NR110	2007-000409	R-CHIP;15KOHM,5%,1/10W,DA,TP,2012		11119-101-153
NR115	2007-000444	R-CHIP;180KOHM,5%,1/10W,DA,TP,2012		11119-101-184
NR102,109,205,45L,45R	2007-000468	R-CHIP;1KOHM,5%,1/10W,DA,TP,2012		11119-101-102
NR42L,42R,114	2007-000477	R-CHIP;1MOHM,5%,1/10W,DA,TP,2012		11119-101-105
NR40L,40R	2007-000586	R-CHIP;22KOHM,5%,1/10W,DA,TP,2012		11119-101-223
NR101	2007-000593	R-CHIP;22OHM,5%,1/10W,DA,TP,2012		11119-101-220
NR43L,43R,200	2007-000653	R-CHIP;27KOHM,5%,1/10W,DA,TP,2012		11119-101-273
NR201,202	2007-000686	R-CHIP;3.3KOHM,5%,1/10W,DA,TP,2012		11119-101-332
NR105	2007-000830	R-CHIP;39KOHM,5%,1/10W,DA,TP,2012		11119-101-393
NR44L,44R,46L,46R	2007-000872	R-CHIP;4.7KOHM,5%,1/10W,DA,TP,2012		11119-101-472
NR117	2007-000898	R-CHIP;430KOHM,5%,1/10W,DA,TP,2012		11119-101-434
NR111,108	2007-000941	R-CHIP;47KOHM,5%,1/10W,DA,TP,2012		11119-101-473
NR112	2007-001039	R-CHIP;56KOHM,5%,1/10W,DA,TP,2012		11119-101-563
NR113	2007-001177	R-CHIP;8.2KOHM,5%,1/10W,DA,TP,2012		11119-101-822
NR116	2007-001195	R-CHIP;820KOHM,5%,1/10W,DA,TP,2012		11119-101-824
NR118	2007-001213	R-CHIP;82OHM,1%,1/10W,DA,TP,2012		11119-102-820
NR555	2008-000141	R-FUSIBLE;2.2OHM,5%,1/4W,AA,TP,2.6X		11058-277-229
NVR1701	2103-000007	VR-SEMI;50KOHM,30%,1/10W,SIDE		11249-102-063
NVR1702,1703,1704	2103-000291	VR-SEMI;20KOHM,30%,1/10W,SIDE		11249-102-043
NC119,120,121,107,108	2203-000199	C-CERAMIC,CHIP;100NF,+80-20%,50V,Z5		
NC603				
NC205,110,116,102,103	2203-000260	C-CERAMIC,CHIP;10NF,10%,50V,X7R,201		11129-004-103
43R,44L,500,600,601,602				
NC1000,1001	2203-000363	C-CERAMIC,CHIP;150PF,5%,50V,NPO,201		
NC112	2203-000495	C-CERAMIC,CHIP;2.2NF,10%,50V,X7R,20		11129-004-222
NC118	2203-000787	C-CERAMIC,CHIP;330PF,5%,50V,NPO,201		
NC113,125,101	2203-000802	C-CERAMIC,CHIP;33NF,10%,50V,X7R,201		11129-001-333
NC100	2203-000892	C-CERAMIC,CHIP;4.7NF,10%,50V,X7R,20		
NC204,124	2203-000919	C-CERAMIC,CHIP;470NF,+80-20%,16V,Y5		
NC200	2203-000979	C-CERAMIC,CHIP;47NF,10%,50V,X7R,201		
NC2000	2203-001026	C-CERAMIC,CHIP;4PF,0.25PF,50V,SL,20		
NC45R,46L	2203-001058	C-CERAMIC,CHIP;560PF,5%,50V,NPO,201		11129-019-561

Loc No.	New Code No.	Description	Specification	Old Code No.
NC111	2203-001105	C-CERAMIC,CHIP;6.8NF,10%,50V,X7R,20		11129-004-682
NC115	2203-001137	C-CERAMIC,CHIP;68NF,+80-20%,50V,Y5V		11129-004-683
NC190	2203-001256	C-CERAMIC,CHIP;8PF,0.25PF,50V,NPO,2		
NC109,104,42R,43L	2203-001537	C-CERAMIC,CHIP;1NF,10%,50V,X7R,2012		
NC41L,41R	2203-001550	C-CERAMIC,CHIP;1.2NF,10%,50V,X7R,20		
NC201	2203-001551	C-CERAMIC,CHIP;1.5NF,10%,50V,X7R,20		
NC202,203	2203-001619	C-CERAMIC,CHIP;27PF,5%,50V,NPO,2012		
NC702,105	2401-000243	C-AL;100UF,20%,10V,GP,6.3*5,2.5MM,T		11608-152-101
NC114	2401-000419	C-AL;10UF,20%,16V,GP,5X11,5,-		
NC703	2401-000778	C-AL;220UF,20%,10V,GP,6.3X11,2.5MM,		11608-102-224
NC700,701	2401-000868	C-AL;220UF,20%,4V,GP,6.3*5,2.5MM,TP		11608-171-221
NC44R,45L,40L,40R,122	2401-001238	C-AL;4.7UF,20%,25V,GP,3*5,1MM,TP		11608-154-479
NC42L	2401-001502	C-AL;47UF,20%,16V,GP,6.3*5,2.5MM,TP		11608-153-470
NC117	2401-001968	C-AL;470NF,20%,50V,GP,5X11MM,5,TP		
NL100	2703-000002	INDUCTOR-SMD;100UH,10%,2.5X3.2X2MM		11176-600-040
NXF100	2802-000211	RESONATOR-CERAMIC;16.93MHZ,0.5%,TP,		14539-503-083
NS100	3409-000174	SWITCH-LEAF;16VDC,500MA,10GF,SPST		13564-601-100
NCW100	3708-000177	CONNECTOR-FPC/FC/PIC;16P,1.0MM,ANGL		A6010-1523
NCW103	3708-000412	CONNECTOR-FPC/FC/PIC;12P,1.25MM,ANG		A6010-1526
NCW101	3711-001136	CONNECTOR-HEADER;BOX,8P,1R,2MM,ANGL		13349-139-080
NIC05	AC14-12001G	IC;KA78L05,T,-		
	AH62-30047A	HEAT SINK;ETHD,-,T0.5,-,-,-,MAX-555		11124-0061-00
AH90-10719E	ASSY-PCB;G3A8-3VI/C,NEW			
SZD1	0403-000352	DIODE-ZENER;UZ4.7BM,4.7V,4.4-5.0V,5		12169-403-200
SZD2	0403-000361	DIODE-ZENER;UZ6.2BSB,6.2V,5.99-6.24		12169-404-800
SIC1,2	1003-000298	IC-MOTOR DRIVER;LB1641,SIP,10P,-,-,		
SR4	2001-000028	R-CARBON(S);100OHM,5%,1/2W,AA,TP,2.		11018-377-101
SR1,2,5	2001-000429	R-CARBON;1KOHM,5%,1/8W,AA,TP,1.8X3.		11018-877-102
SR3	2001-000734	R-CARBON;4.7KOHM,5%,1/8W,AA,TP,1.8X		11018-877-472
SC5,6,7	2201-000163	C-CERAMIC,DISC;10NF,+80-20%,50V,Y5V		11417-344-103
SC1,2,3,4	2202-000797	C-CERAMIC,MLC-AXIAL;10NF,30%,16V,Y5		
SC11	2401-000240	C-AL;100UF,20%,10V,GP,6*11MM,5MM,TP		11608-102-104
SC8,9	2401-000795	C-AL;220UF,20%,16V,GP,8X11.5,3.5MM,		
SC10	2401-001912	C-AL;1UF,20%,50V,GP,5X11MM,2MM,BK		
SL1	2701-000177	INDUCTOR-AXIAL;33UH,10%,2.5X3.4MM		12429-211-330
SCW2	3708-000507	CONNECTOR-FPC/FC/PIC;12P,1.25MM,ANG		
	3708-001131	CONNECTOR-FPC/FC/PIC;5P,1.25MM,STRA		
SCW1	3711-002579	CONNECTOR-HEADER;WALL,22P,1R,2.5MM,		
	3711-003379	CONNECTOR-HEADER;NOWALL,3P,1R,2.5MM		
SIC3	AC14-12001G	IC;KA78L05,T,-		
SCW4	AH39-20025S	LEAD-CONNECTOR,ASSY;-,51004-08,3502		16439-0291-00
SCW3	AH39-20025T	LEAD-CONNECTOR,ASSY;-,51004-08,3502		16439-0292-00
SCW5	3708-001131	CONNECTOR-FPC/FC/P/C;5P,1.25MM STRAIGHT		
SCW6	3711-003379	CONNECTOR-HEADER; NOWALL,3P,1R,2.5MM		