SONIC FRONTIERS
INCORPORATED

LINE 2 - REPAIR MANUAL

SONIC FRONTIERS warranty repair work shall be performed only by qualified electronics technicians. Work done by non-authorized SONIC FRONTIERS service locations and/or dealers is not covered under the SONIC FRONTIERS warranty. Damage caused by service attempted by one other than our authorized service bureaus is not covered under the warranty.

Please read these instructions before attempting any service work. They are intended to aid the electronics technician in making the proper diagnosis in repairing the Line 2 preamplifier.

Normal Operation

The following points have been found to be the most frequent areas of concern from customers, **no fault exists in the Line 2 in each case**.

1. Some hiss in speakers.
   - The Line 2 incorporates 6 vacuum tubes and will inherently make more hiss noise than a solid state product. Typical noise output is no more than 120μV per phase with the volume control fully counter-clockwise.
   - Sensitive amplifiers and sensitive speakers will reveal this hiss more readily than average sensitivity amplifiers and speakers, example: an amplifier with an input sensitivity of $0.775V_{rms}$ and speakers with a sensitivity of 90dB SPL @1W, 1m anechoic would be considered moderately sensitive.

All components listed in the text will have the same designation for both channels but with an 'L' prefix for Left channel components. For this reason, all parts will be referred to by Left channel only. Example: resistors LR43 and R43; the resistor LR43 is found in the Left channel and R43 is in the Right channel.

Filament Supply Voltages

1. Filament voltage should be measured across pins 4 and 5 of the following tubes: LV1and LV3. A reading of 6.0Vdc to 6.3Vdc is acceptable, any voltages higher or lower must be

2. If one channel has no filament voltage present, check the bridge rectifier for the filament section, LBR1 in the Power Supply chassis. Replace if needed and place a heat sink on both the filament bridge rectifier devices; this will improve heat dissipation.

3. If only tubes LV1 and LV2 are not lighting, check regulator LIC2 in the Power Supply chassis. If only tubes LV3 and LV4 are not lighting, check regulator LIC1.

High Voltage Supplies

Note: The following voltages are measured referenced to chassis ground or an audio ground (RCA jack sleeve is sufficient).

1. With the Power supply switched to ON and the STANDBY position, check the voltages

Power Supply	Mode of Operation		
Pin Number	Standby	Operate	Muted

SONIC FRONTIERS INCORPORATED

1	6.1	5.4	
2	-12.1	-12.1	
3	18.3	18	
4	5.1	1.5	5.3
5	-0.1	-123	
6	0	0	
7	10.9	0.1	
8	9.9	9.2	
9	-4.7	270	
10	-1	146	
11	0.2	1.5	5.3
12	6.15	6.15	
13	6.15	6.15	
14	6.15	6.15	
15	0	0	
16	0	0	

Front View

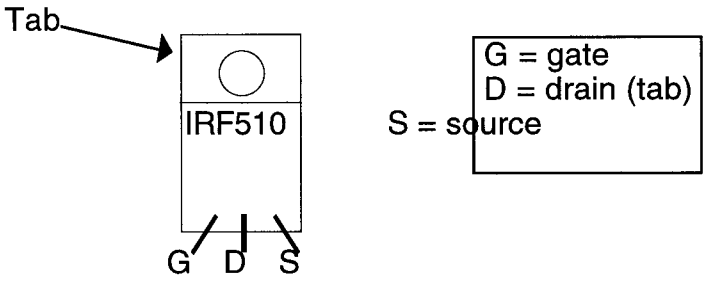

Figure 1

2. Place a voltmeter probe on the tab (drain) of Q3 or LQ3 and switch the Power supply to the OPERATE position. The voltage should ramp up to approximately 285Vdc ±10V within 40 seconds. If the voltage goes immediately to 300Vdc after switching to OPERATE, there is a problem in the first High Voltage regulation stages at LQ2 and LQ5. Check these components as well as each string of Zener diodes from LZD1 to LZD15. (If the circuit board is a REV.0 board, refer to Ed's Tech Notes - Power Supply Update for the SFL-2).

3. Measure the voltage on the tab of LQ6, the voltage should be approximately 155Vdc ±10V.

4. Measure the voltage at the source pin of LQ3, the voltage should be exactly 10Vdc less than the voltage measured on the tab. If this voltage is not 10V less, there is a problem in the buffer regulator. Check diodes LZD10 and D4-D6. Check LQ3 and replace LIC1 if necessary.

5. Measure the voltage on the source of LQ6, the voltage should be exactly 10Vdc less than the voltage measured on the tab. If this voltage is not 10V less, check LZD16, LD10 and LD14. Check LQ6 and replace LIC2 if necessary.

Noise (Example case for noise in Left channel)

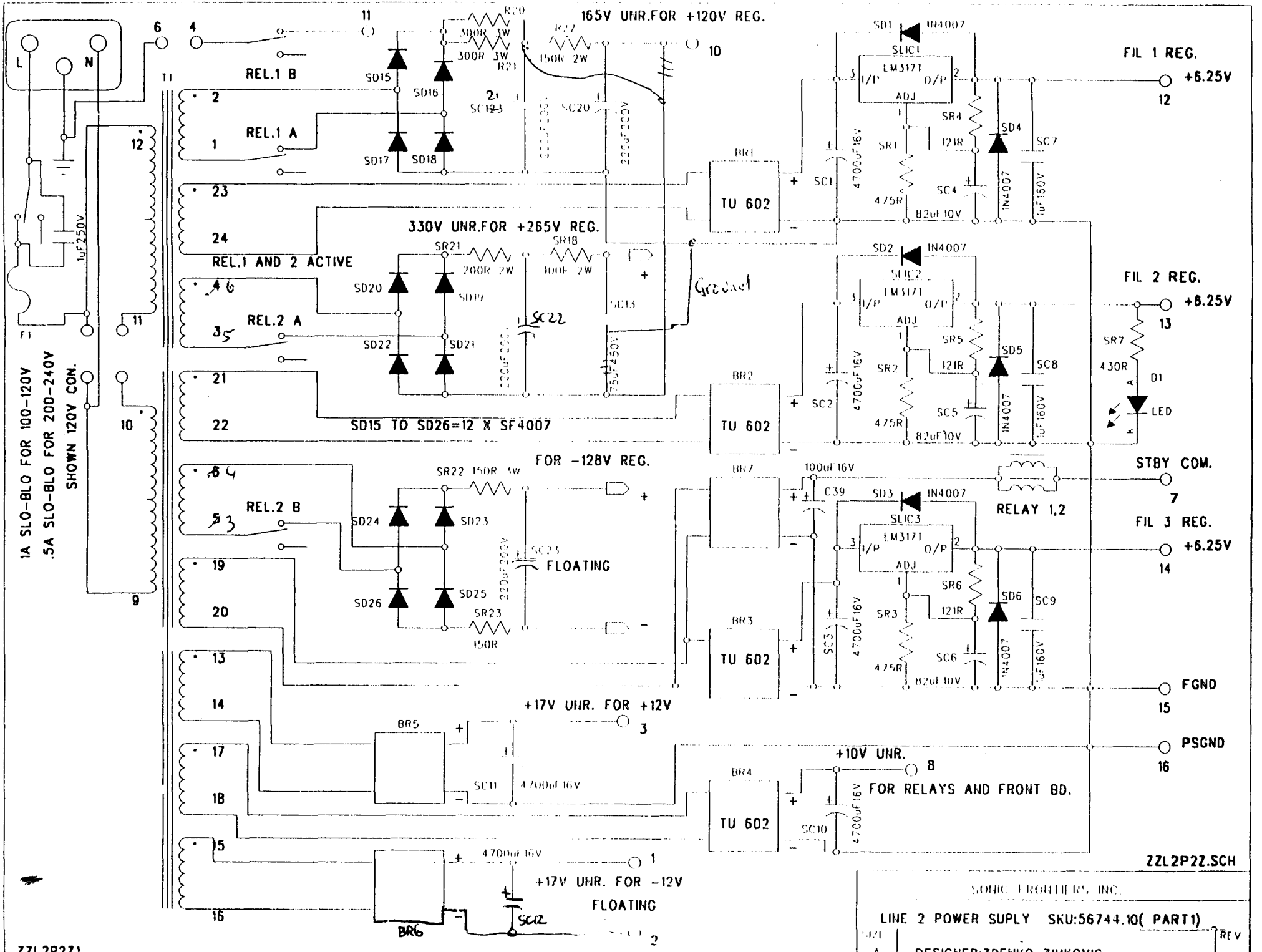

165V UNR.FOR +120V REG.
330V UNR.FOR +265V REG.
REL.1 AND 2 ACTIVE
REL.1 B
REL.1 A
REL.2 A
REL.2 B
SD15 TO SD26=12 X SF4007
FOR -128V REG.
FLOATING
+17V UNR. FOR +12V
+17V UNR. FOR -12V
FLOATING
+10V UNR.
FOR RELAYS AND FRONT BD.
FIL 1 REG.
FIL 2 REG.
FIL 3 REG.
+6.25V
STBY COM.
RELAY 1,2
FGND
PSGND
TU 602
LM317T
1A SLO-BLO FOR 100-120V
.5A SLO-BLO FOR 200-240V
SHOWN 120V CON.
1uF250V
Ground
ZZL2P2Z.SCH
SONIC FRONTIERS, INC.
LINE 2 POWER SUPLY SKU:56744.10(PART1)
DESIGNER:ZDENKO ZIVKOVIC
ZZL2P2Z1
NUMBERS 1 TO 16 ARE O/P FROM LINE 2 POWER SUPLY FOR MAIN PCB.LINE 2

SONIC FRONTIERS
INCORPORATED

1. Reverse tubes LV1 and V1. If the noise is no longer in the Left channel but now in the Right channel, the noise problem was noisy tube LV1. If the noise remained in the Left channel, switch tubes LV2 and V2. If the noise is no longer in the Left channel but now in the Right channel, the noise problem was noisy tube LV2.

2. If after reversing tubes LV1 and V1 or LV2 and V2 did not find the noise, listen to the output of the Line 2 through the unbalanced outputs only for this next test. Switch between 0^0 Phase and 180^0 Phase, if the noise is only present in the 0^0 Phase, replace resistor LR. If the noise is only in the 180^0 Phase, replace resistor LR. If the noise is in both Phases of the output replace resistors LR and LR.

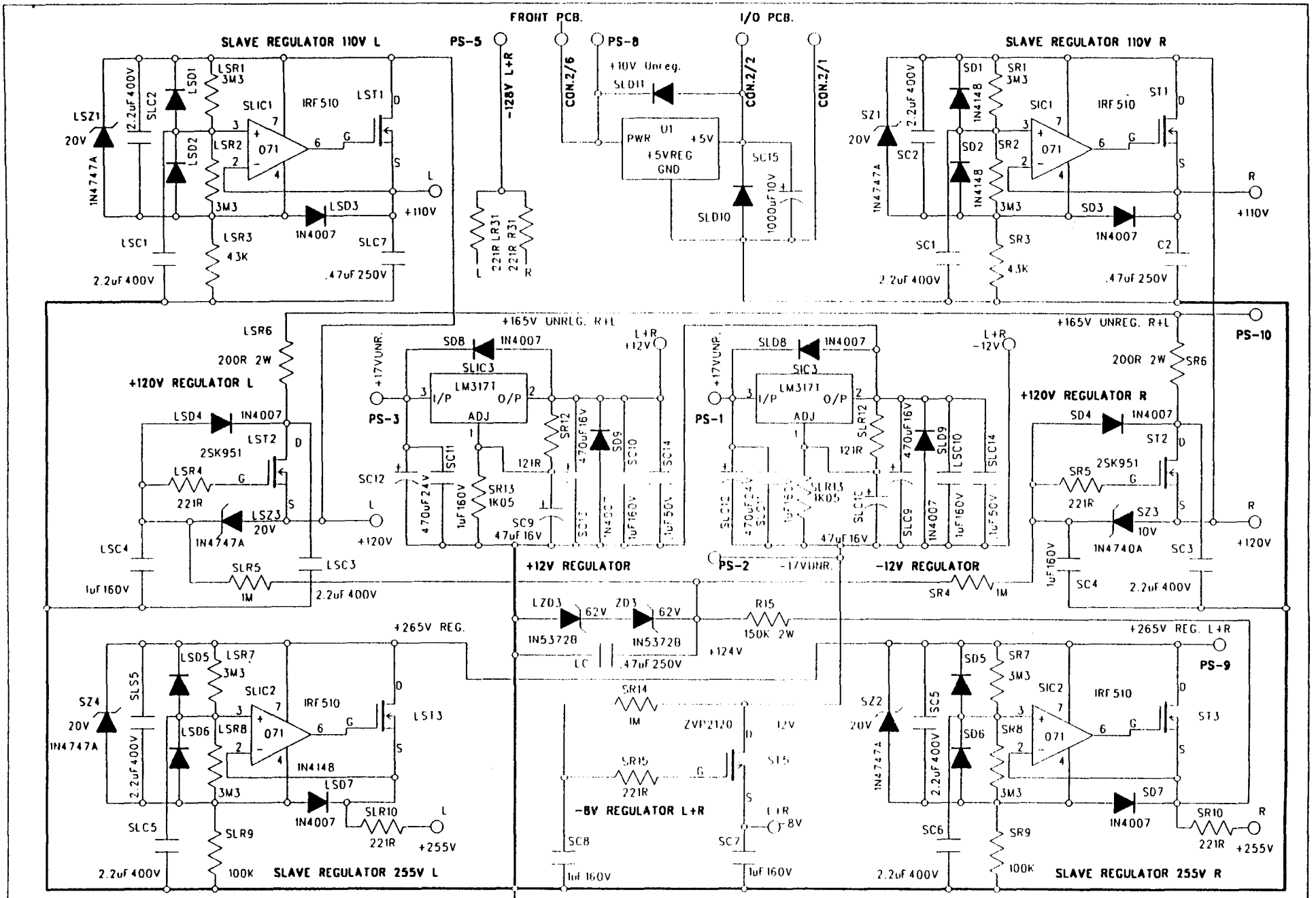

PS-• =SUPPLY FROM POWER SUPPLY LINE 2

ZZL2P.

SONIC FRONTIERS INC.		
LINE 2 MAIN BOARD -POWER SUPPLY PART		
SIZE A	DOCUMENT NUMBER DESIGNER:ZDENKO ZIVKOVIC	REV
DATE: NOV.1996	SHEET of	

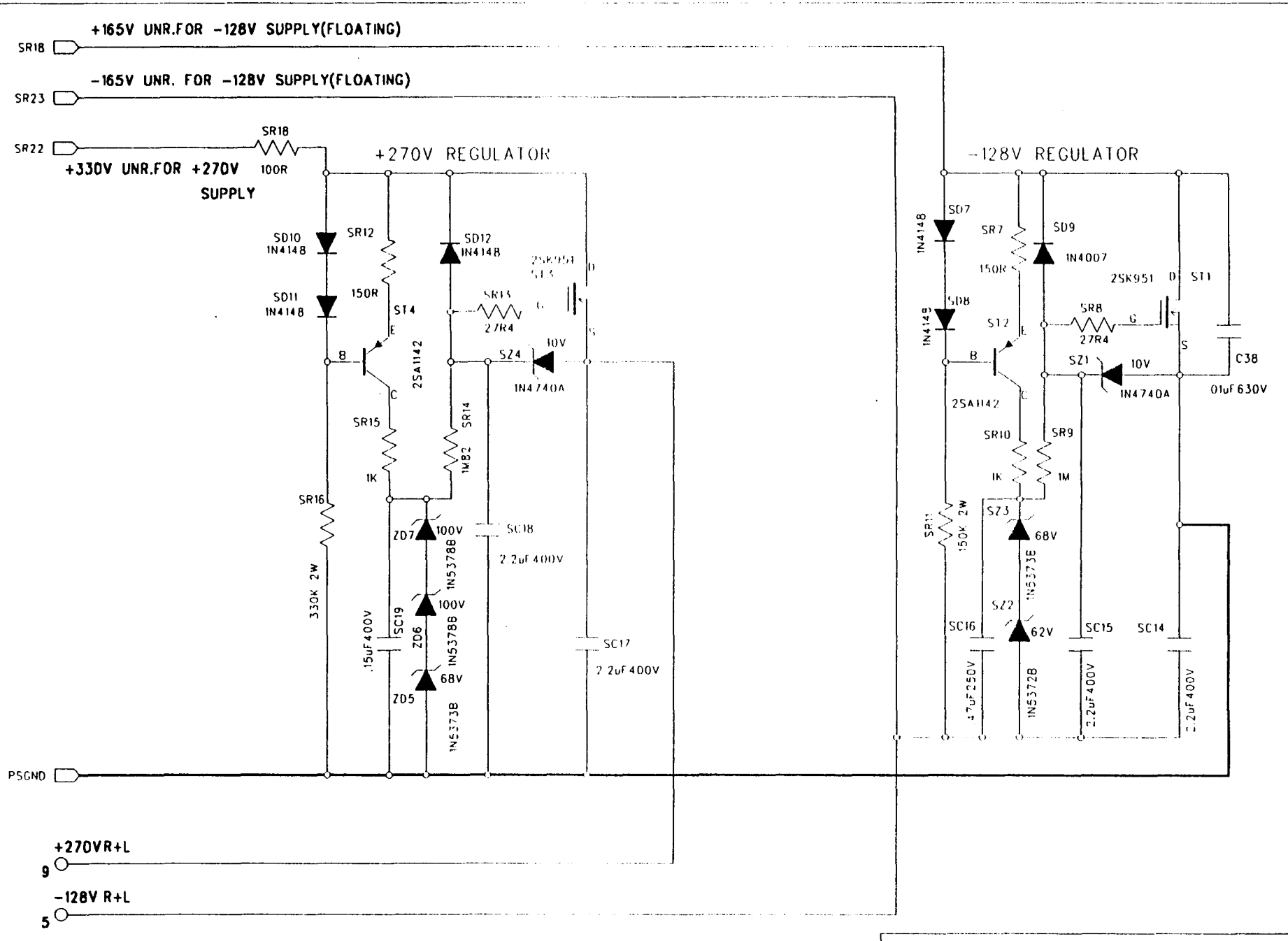
+165V UNR.FOR -128V SUPPLY(FLOATING)
SR18
-165V UNR. FOR -128V SUPPLY(FLOATING)
SR23
SR22
+330V UNR.FOR +270V SUPPLY
SR18
100R
+270V REGULATOR
-128V REGULATOR
SD10 1N4148
SR12
150R
ST4
2SA1142
SD11 1N4148
SD12 1N4148
SR13
27R4
SZ4
10V
1N4740A
SR15
1K
SR14
1WB2
SR16
330K 2W
ZD7
100V
1N5378B
ZD6
100V
1N5378B
ZD5
68V
1N5373B
SC19
.15uF400V
SC18
2.2uF400V
SC17
2.2uF400V
SD7 1N4148
SR7
150R
SD9 1N4007
SD8 1N4148
ST2
2SA1142
SR8
27R4
2SK951
ST1
SZ1
10V
1N4740A
C38
.01uF630V
SR10
1K
SR9
1M
SR11
150K 2W
SZ3
68V
1N5373B
SZ2
62V
1N5372B
SC16
4.7uF250V
SC15
2.2uF400V
SC14
2.2uF400V
PSGND
+270VR+L
9
-128V R+L
5
NUMBERS 1 TO 16 ARE O/P FROM LINE 2 POWER SUPLY FOR MAIN PCB.LINE 2
ZZLP2Z1
SONIC FRONTIERS INC.
LINE2 POWER SUPPLY(PART 2) SKU.56744.10
SIZE A
DESIGNER:ZDENKO ZIVKOVIC
REV 0
DATE:NOV. 1996
SHEET 9!

SHEET 2 FOR SONIC FRONTIERS INTERNAL USE

HEADROOM Headphone amplifier

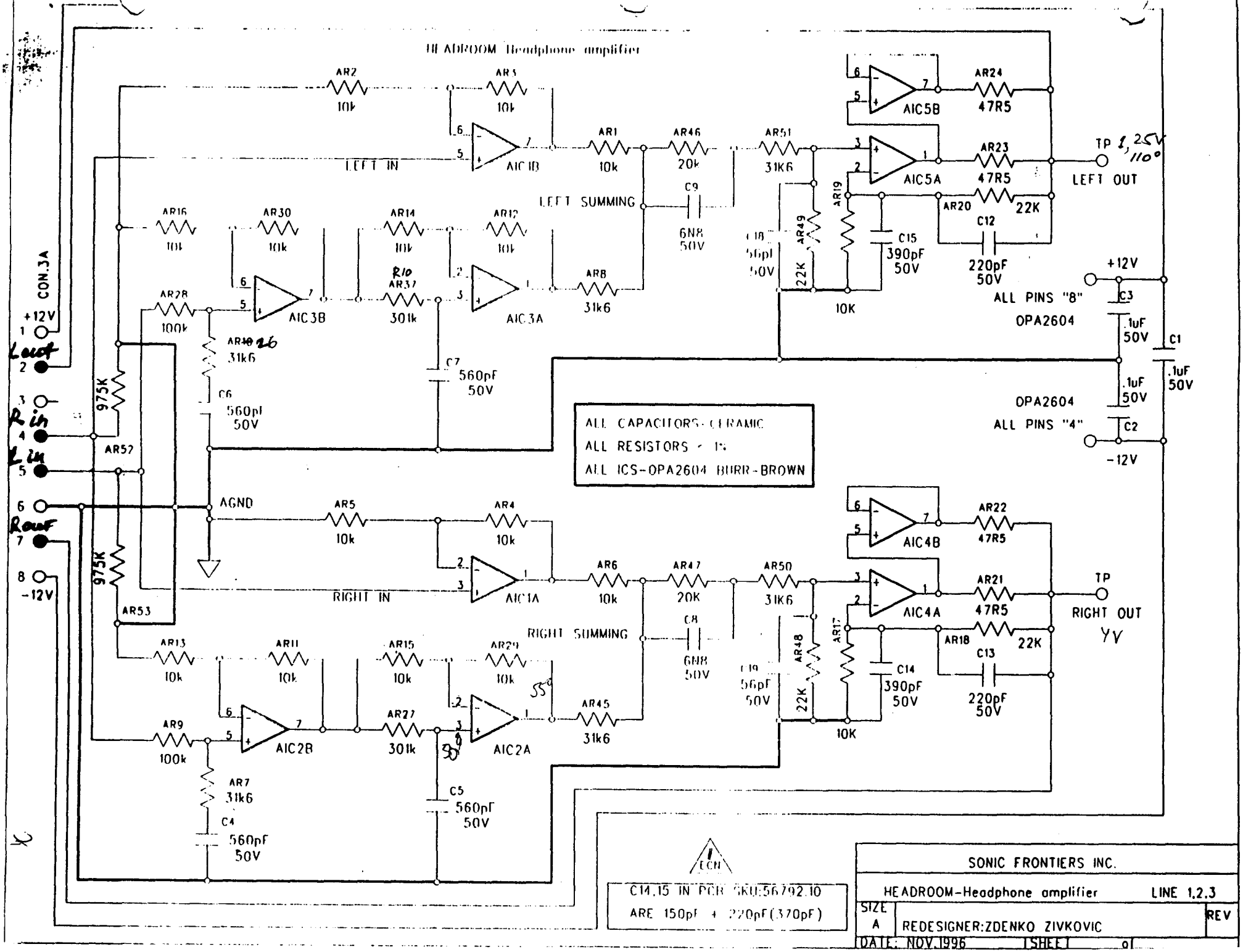

SONIC FRONTIERS INC.	
HEADROOM-Headphone amplifier	LINE 1,2,3
SIZE A	REV
REDESIGNER:ZDENKO ZIVKOVIC	
DATE: NOV.1996	SHEET of

© [illegible] FOR SONIC FRONTIERS ILLEGAL USE

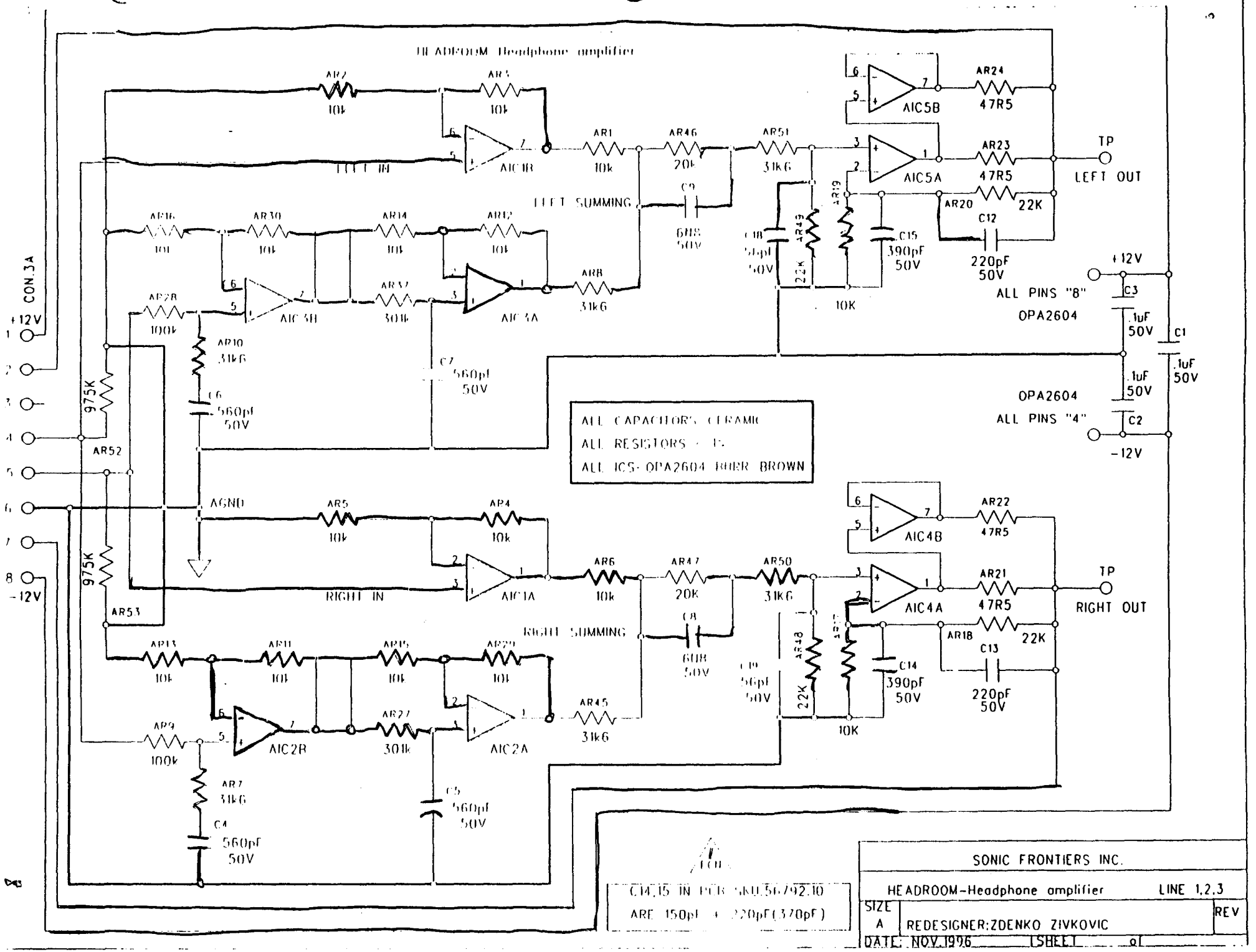

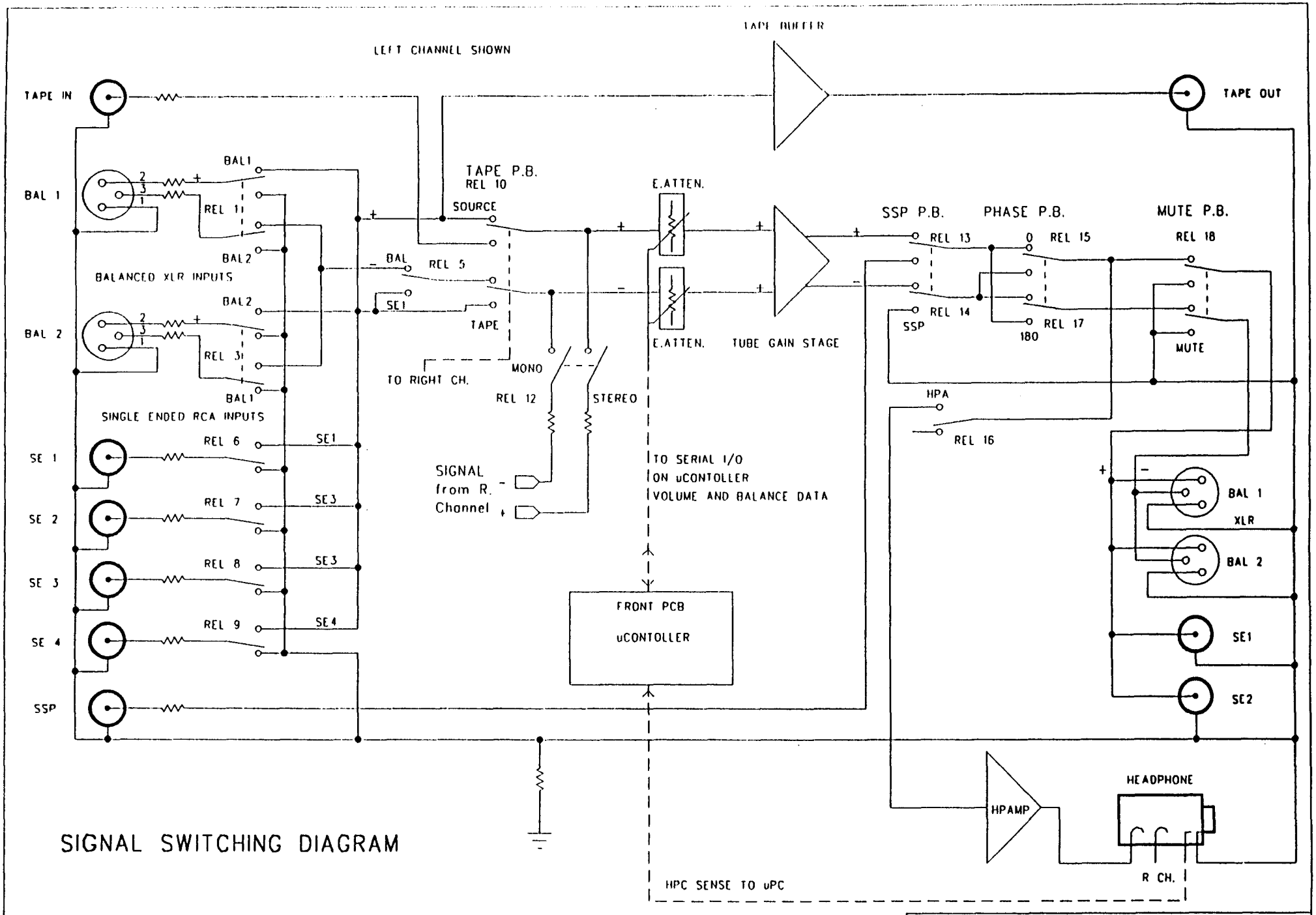

SIGNAL SWITCHING DIAGRAM

SONIC FRONTIERS INC.		
Line Stage Signal Switching		line -1,2, 3
SIZE A	DESIGNER:ZDENKO ZIVKOVIC	REV
	SHEET of	

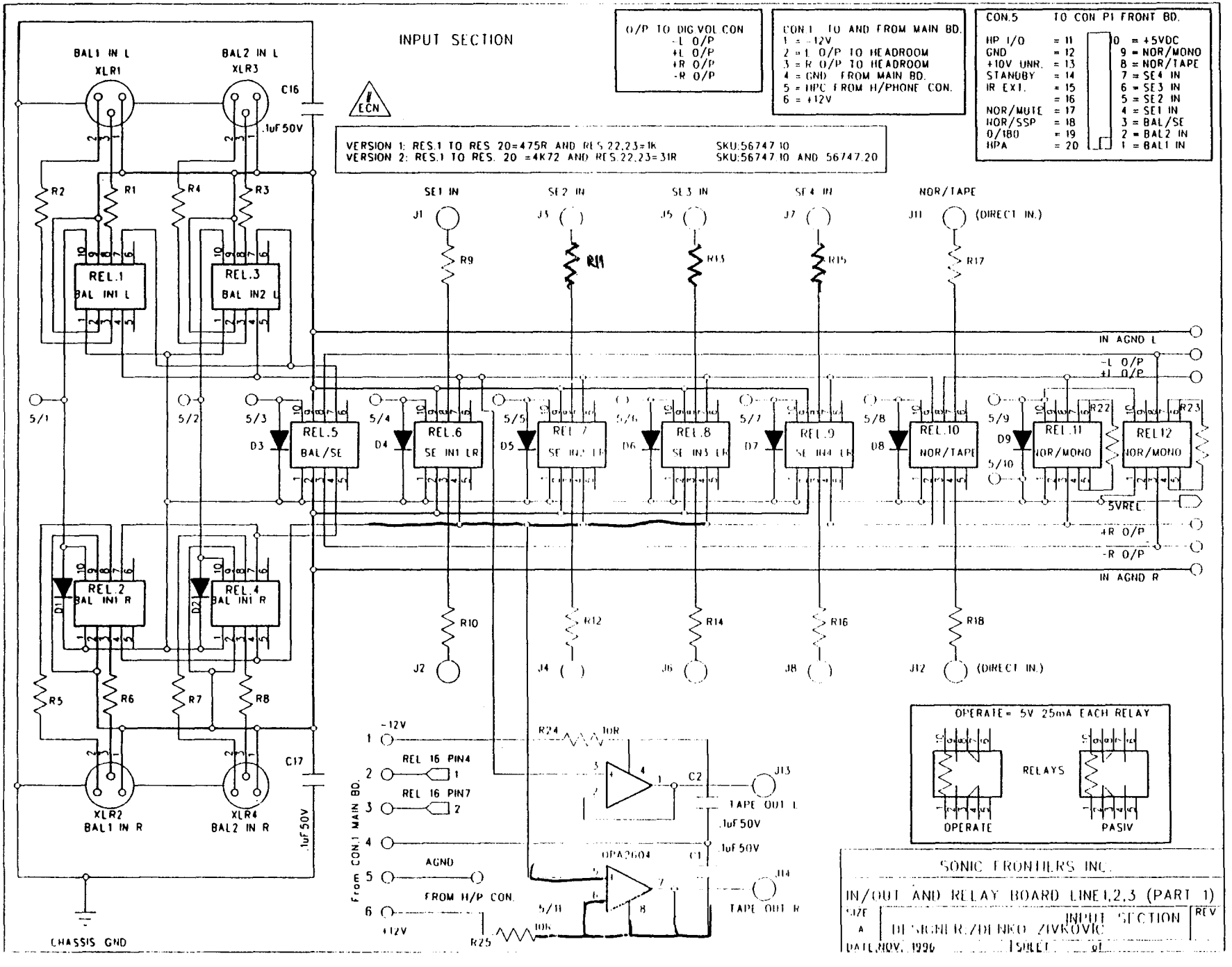
INPUT SECTION
O/P TO DIG.VOL CON
-L O/P
+L O/P
+R O/P
-R O/P
CON.1 TO AND FROM MAIN BD.
1 = -12V
2 = L O/P TO HEADROOM
3 = R O/P TO HEADROOM
4 = GND FROM MAIN BD.
5 = HPC FROM H/PHONE CON.
6 = +12V
CON.5 TO CON P1 FRONT BD.
HP I/O = 11
GND = 12
+10V UNR. = 13
STANDBY = 14
IR EXT. = 15
= 16
NOR/MUTE = 17
NOR/SSP = 18
0/180 = 19
HPA = 20
0 = +5VDC
9 = NOR/MONO
8 = NOR/TAPE
7 = SE4 IN
6 = SE3 IN
5 = SE2 IN
4 = SE1 IN
3 = BAL/SE
2 = BAL2 IN
1 = BAL1 IN
ECN
VERSION 1: RES.1 TO RES 20=475R AND RES.22,23=1k SKU:56747.10
VERSION 2: RES.1 TO RES. 20 =4K72 AND RES.22,23=31R SKU:56747.10 AND 56747.20
BAL1 IN L
XLR1
BAL2 IN L
XLR3
C16
.1uF 50V
SE1 IN
SE2 IN
SE3 IN
SE4 IN
NOR/TAPE
J1
J3
J5
J7
J11
(DIRECT IN.)
R9
R11
R13
R15
R17
REL.1
BAL IN1 L
REL.3
BAL IN2 L
REL.2
BAL IN1 R
REL.4
BAL IN1 R
REL.5
BAL/SE
REL.6
SE IN1 LR
REL.8
SE IN3 LR
REL.9
REL.10
NOR/TAPE
REL.11
NOR/MONO
REL.12
NOR/MONO
D1
D2
D3
D4
D5
D6
D7
D8
D9
5/1
5/2
5/3
5/4
5/5
5/6
5/7
5/8
5/9
5/10
IN AGND L
-L O/P
+L O/P
5VREL
+R O/P
-R O/P
IN AGND R
R10
R12
R14
R16
R18
J2
J4
J6
J8
J12
(DIRECT IN.)
R1
R2
R3
R4
R5
R6
R7
R8
C17
.1uF 50V
XLR2
BAL1 IN R
XLR4
BAL2 IN R
CHASSIS GND
From CON.1 MAIN BD.
-12V
REL 16 PIN4
REL 16 PIN7
AGND
FROM H/P CON.
+12V
R24
10R
R25
10R
OPA2604
C1
C2
J13
J14
TAPE OUT L
TAPE OUT R
.1uF 50V
5/11
OPERATE= 5V 25mA EACH RELAY
RELAYS
OPERATE
PASIV
SONIC FRONTIERS INC.
IN/OUT AND RELAY BOARD LINE1,2,3 (PART 1)
SIZE
A
DESIGNER: DENKO ZIVKOVIC
INPUT SECTION
REV
DATE:NOV. 1996
SHEET of

LEFT AND RIGHT CHANNEL

PART OF MAIN PCB. LINE 1,2

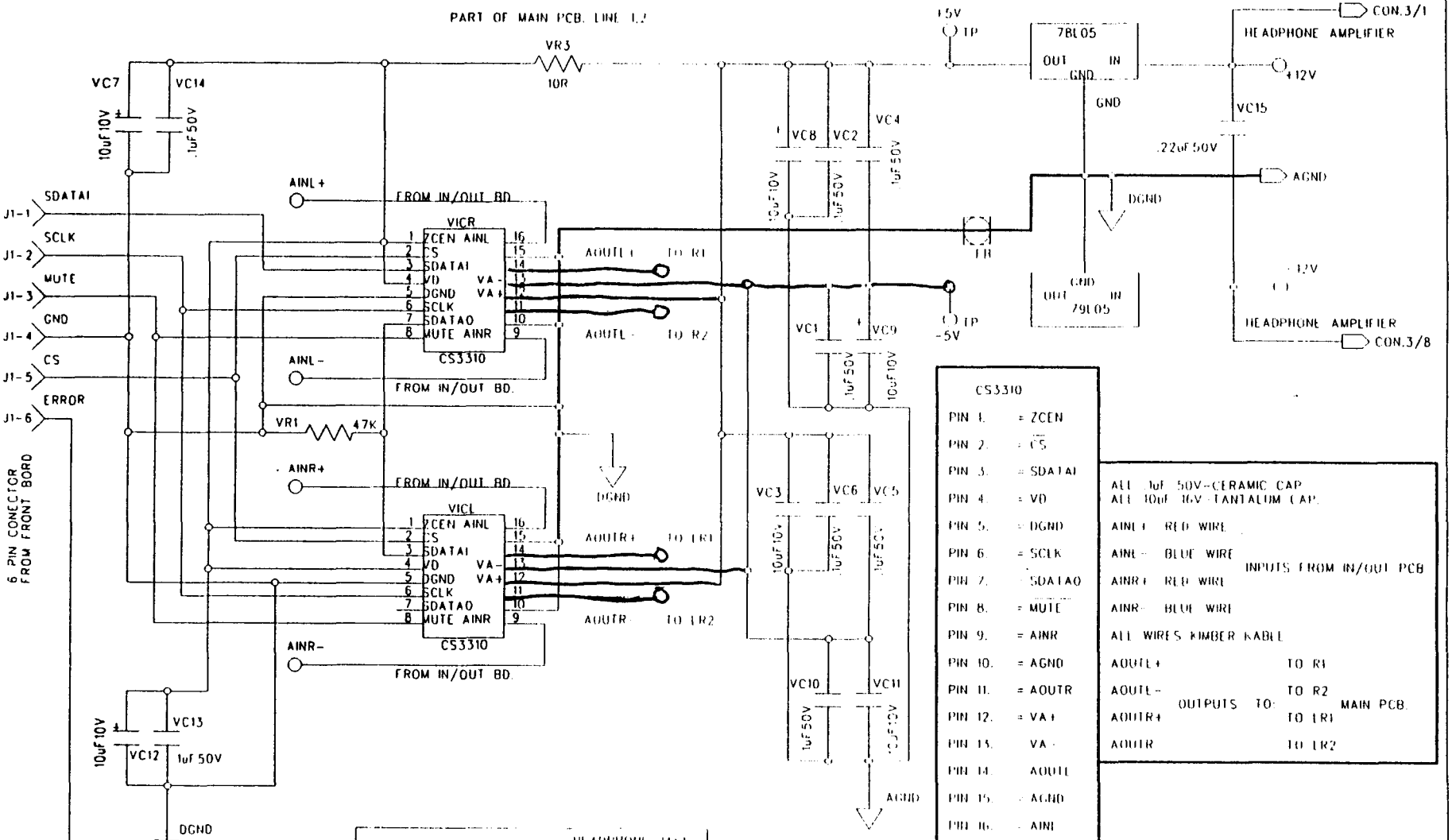

CS3310	
PIN 1.	= ZCEN
PIN 2.	= CS
PIN 3.	= SDATAI
PIN 4.	= VD
PIN 5.	= DGND
PIN 6.	= SCLK
PIN 7.	= SDATAO
PIN 8.	= MUTE
PIN 9.	= AINR
PIN 10.	= AGND
PIN 11.	= AOUTR
PIN 12.	= VA+
PIN 13.	= VA-
PIN 14.	= AOUTL
PIN 15.	= AGND
PIN 16.	= AINL

ALL 1uF 50V-CERAMIC CAP.
ALL 10uF 16V-TANTALUM CAP.

INPUTS FROM IN/OUT PCB:
- AINL+ RED WIRE
- AINL- BLUE WIRE
- AINR+ RED WIRE
- AINR- BLUE WIRE

ALL WIRES RIMBER KABLE

OUTPUTS TO MAIN PCB:
- AOUTL+ TO R1
- AOUTL- TO R2
- AOUTR+ TO LR1
- AOUTR TO LR2

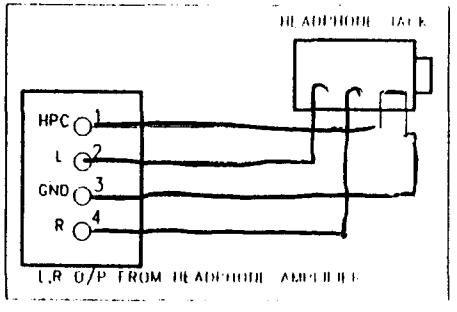

SONIC FRONTIERS INC.

DIGITAL VOLUME CONTROL FOR LINE 1,2 PREAMPLIFIER

SIZE	DOCUMENT NUMBER	REV
A	DESIGNER:ZDUDEQ ZIVEQVIC	
DATE	NOV 96	SHEET 6

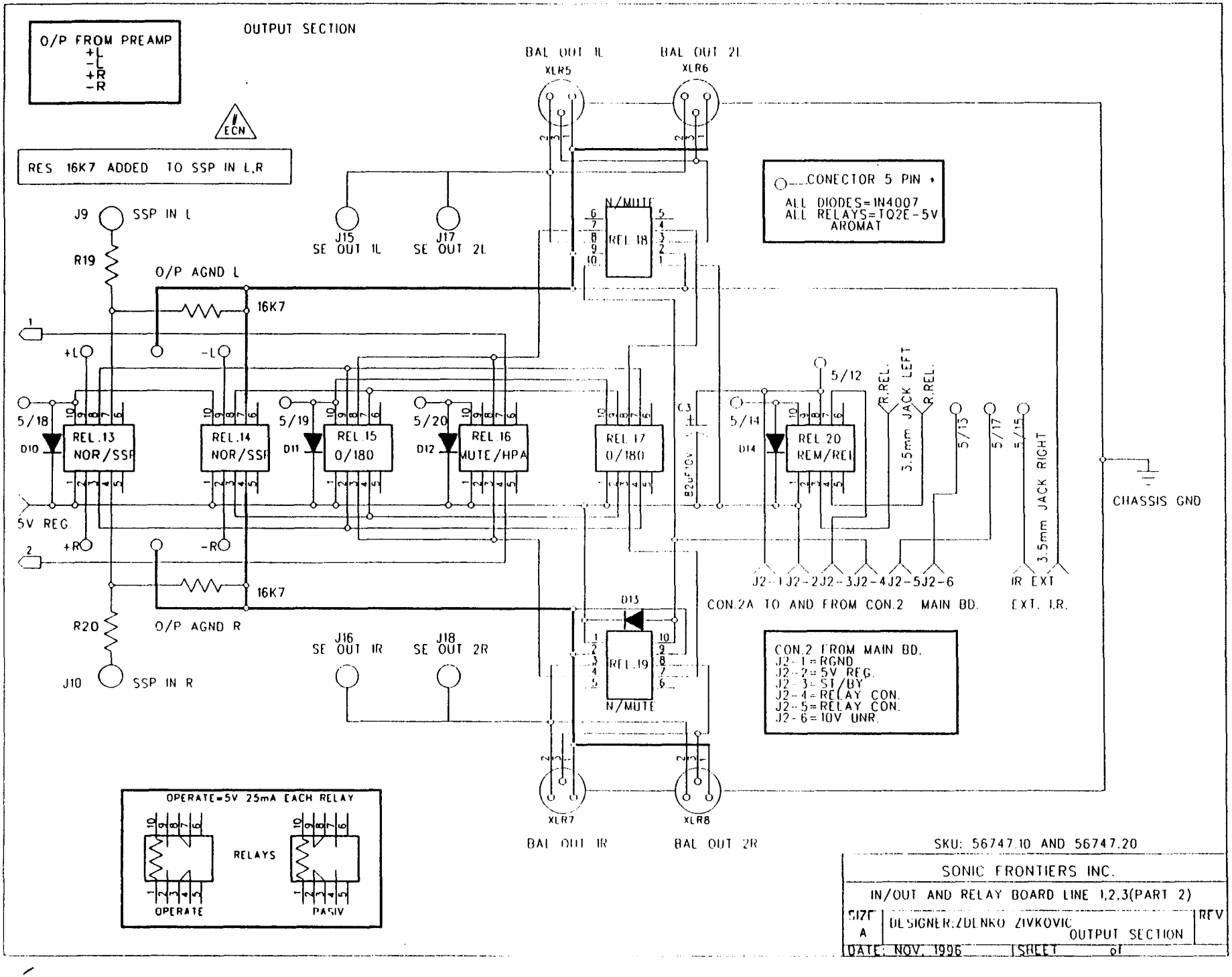
O/P FROM PREAMP
+L
-L
+R
-R
OUTPUT SECTION
ECN
RES. 16K7 ADDED TO SSP IN L,R
BAL OUT 1L
XLR5
BAL OUT 2L
XLR6
CONECTOR 5 PIN
ALL DIODES=1N4007
ALL RELAYS=TQ2E-5V
AROMAT
J9
SSP IN L
R19
O/P AGND L
16K7
J15
SE OUT 1L
J17
SE OUT 2L
N/MUTE
REL 18
+L
-L
5/18
D10
REL.13
NOR/SSP
REL.14
NOR/SSP
5/19
D11
REL.15
0/180
5/20
D12
REL 16
MUTE/HPA
REL 17
0/180
C3
82uF/10V
5/12
5/14
D14
REL 20
REM/REL
R.REL.
3.5mm JACK LEFT
R.REL.
5/13
5/17
5/15
3.5mm JACK RIGHT
CHASSIS GND
5V REG.
+R
-R
16K7
R20
O/P AGND R
J10
SSP IN R
J16
SE OUT 1R
J18
SE OUT 2R
D13
REL.19
N/MUTE
J2-1 J2-2 J2-3 J2-4 J2-5 J2-6
CON.2A TO AND FROM CON.2 MAIN BD.
IR EXT
EXT. I.R.
CON.2 FROM MAIN BD.
J2-1=RGND
J2-2=5V REG.
J2-3=ST/BY
J2-4=RELAY CON.
J2-5=RELAY CON.
J2-6=10V UNR.
OPERATE=5V 25mA EACH RELAY
RELAYS
OPERATE
PASIV
XLR7
BAL OUT 1R
XLR8
BAL OUT 2R
SKU: 56747.10 AND 56747.20
SONIC FRONTIERS INC.
IN/OUT AND RELAY BOARD LINE 1,2,3(PART 2)
SIZE A
DESIGNER:ZDENKO ZIVKOVIC
OUTPUT SECTION
REV
DATE: NOV. 1996
SHEET of

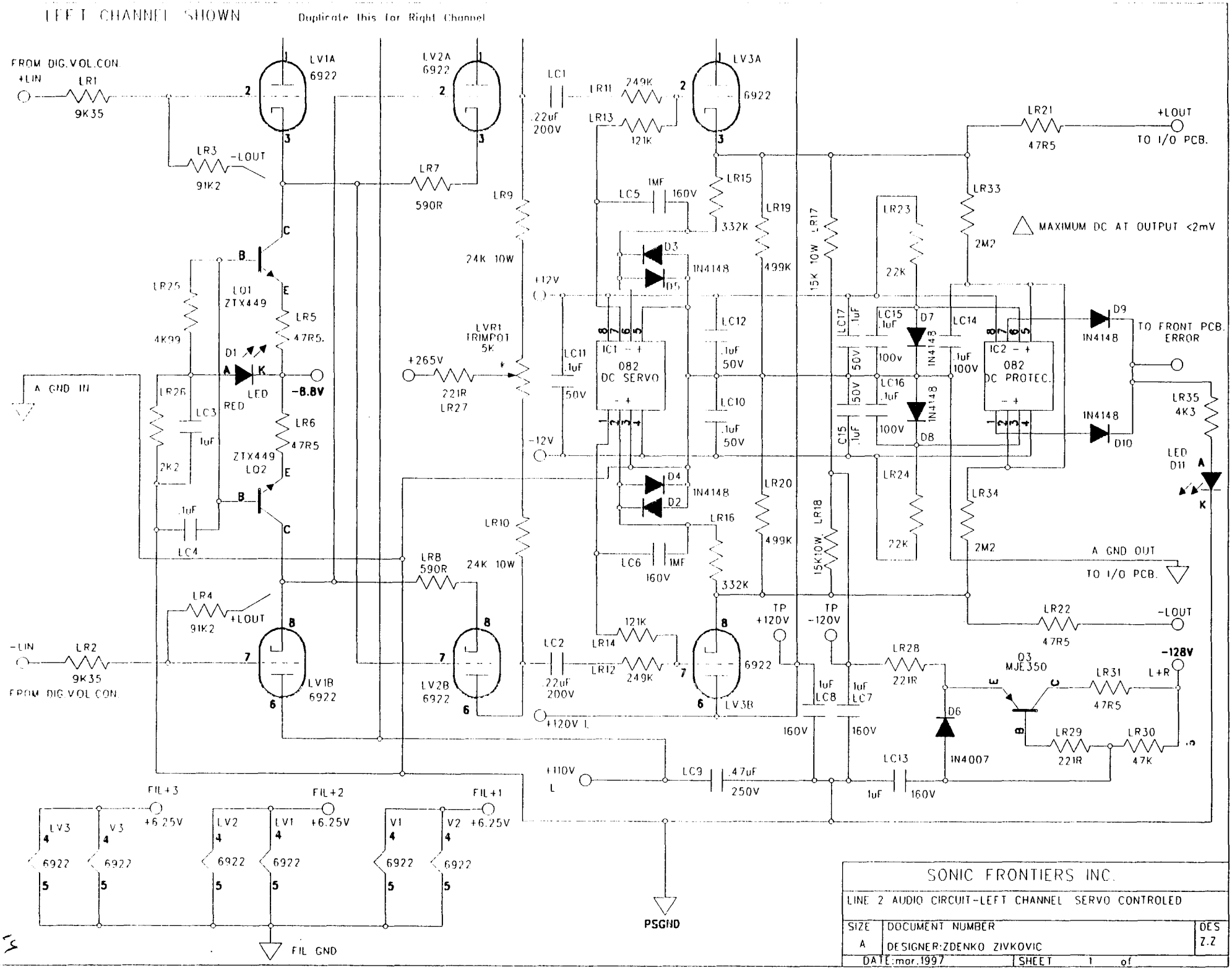
LEFT CHANNEL SHOWN
Duplicate this for Right Channel
FROM DIG.VOL.CON.
+LIN
LR1
9K35
LV1A
6922
LV2A
6922
LV3A
6922
LC1
.22uF
200V
LR11
249K
LR13
121K
LR21
47R5
+LOUT
TO I/O PCB.
LR3
91K2
-LOUT
LR7
590R
LR9
24K 10W
LC5
1MF
160V
LR15
332K
LR19
499K
LR17
15K 10W
LR23
22K
LR33
2M2
MAXIMUM DC AT OUTPUT <2mV
LR25
4K99
LQ1
ZTX449
LR5
47R5.
D1
LED
RED
-8.8V
A GND IN
LR26
LC3
1uF
2K2
LR6
47R5
ZTX449
LQ2
.1uF
LC4
LVR1
TRIMPOT
5K
+265V
221R
LR27
+12V
-12V
LC11
.1uF
50V
IC1
082
DC SERVO
D3
D5
1N4148
LC12
.1uF
50V
LC10
.1uF
50V
LC17
.1uF
50V
LC15
.1uF
100v
D7
1N4148
LC14
.1uF
100V
IC2
082
DC PROTEC.
D9
1N4148
TO FRONT PCB.
ERROR
LC16
.1uF
100V
D8
1N4148
D10
1N4148
LR35
4K3
LED
D11
C15
.1uF
LR24
22K
LR34
2M2
A GND OUT
TO I/O PCB.
D4
D2
1N4148
LR16
332K
LR20
499K
LR18
15K10W
LR10
24K 10W
LR8
590R
LC6
1MF
160V
LR4
91K2
+LOUT
-LIN
LR2
9K35
FROM DIG.VOL.CON.
LV1B
6922
LV2B
6922
LC2
.22uF
200V
LR14
121K
LR12
249K
LV3B
6922
TP
+120V
TP
-120V
LR22
47R5
-LOUT
LR28
221R
Q3
MJE350
-128V
L+R
LR31
47R5
1uF
LC8
160V
1uF
LC7
160V
D6
1N4007
LR29
221R
LR30
47K
+120V L
+110V
L
LC9
.47uF
250V
LC13
1uF
160V
FIL+3
+6.25V
FIL+2
+6.25V
FIL+1
+6.25V
LV3
V3
LV2
LV1
V1
V2
6922
FIL GND
PSGND
SONIC FRONTIERS INC.
LINE 2 AUDIO CIRCUIT-LEFT CHANNEL SERVO CONTROLED
SIZE
A
DOCUMENT NUMBER
DESIGNER:ZDENKO ZIVKOVIC
DES
Z.Z
DATE:mar.1997
SHEET 1 of

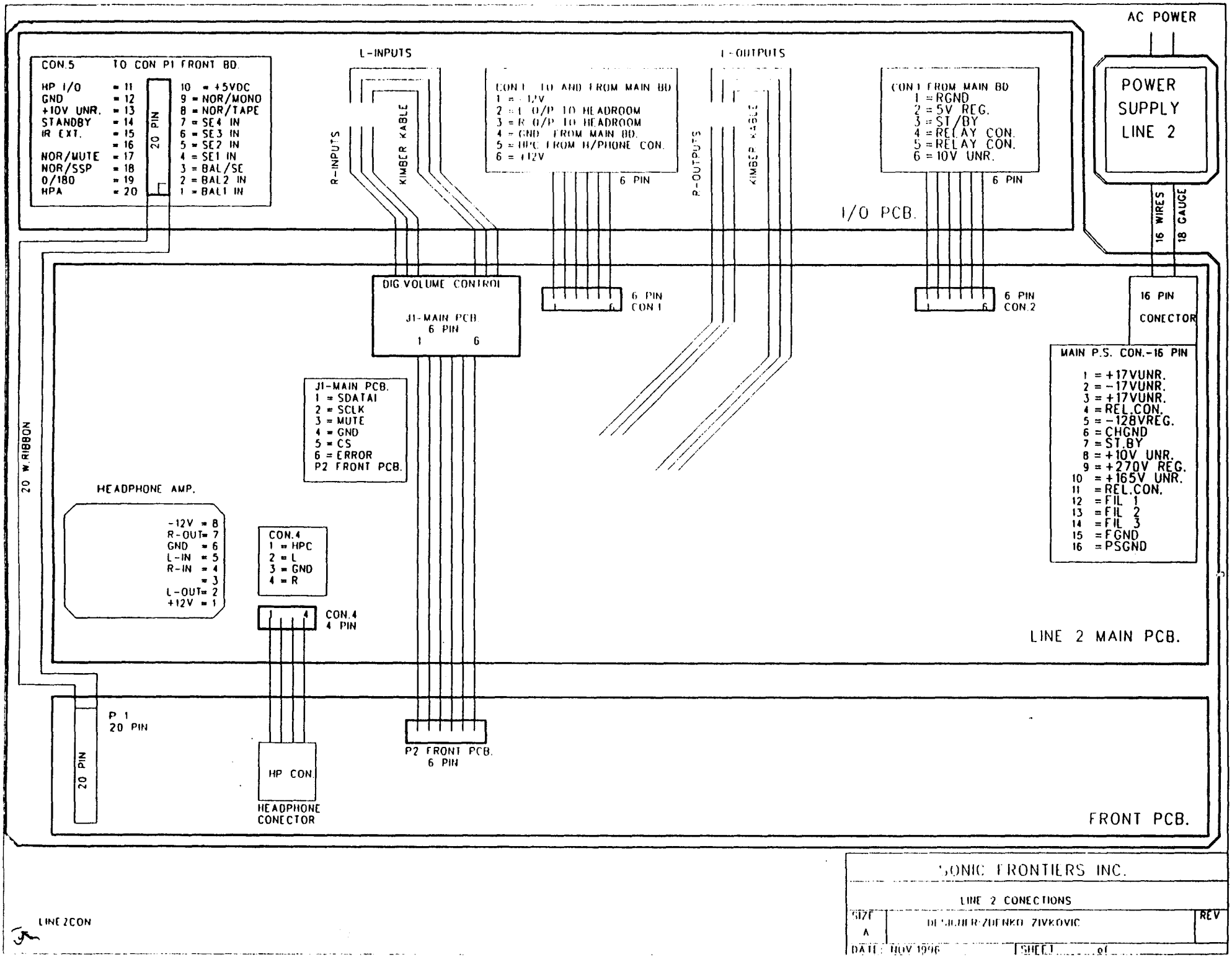

SONIC FRONTIERS INC.

LINE 2 CONECTIONS

SIZE	DESIGNER: ZDENKO ZIVKOVIC	REV
A		
DATE: NOV 1996	SHEET ... of ...	

LINE2CON

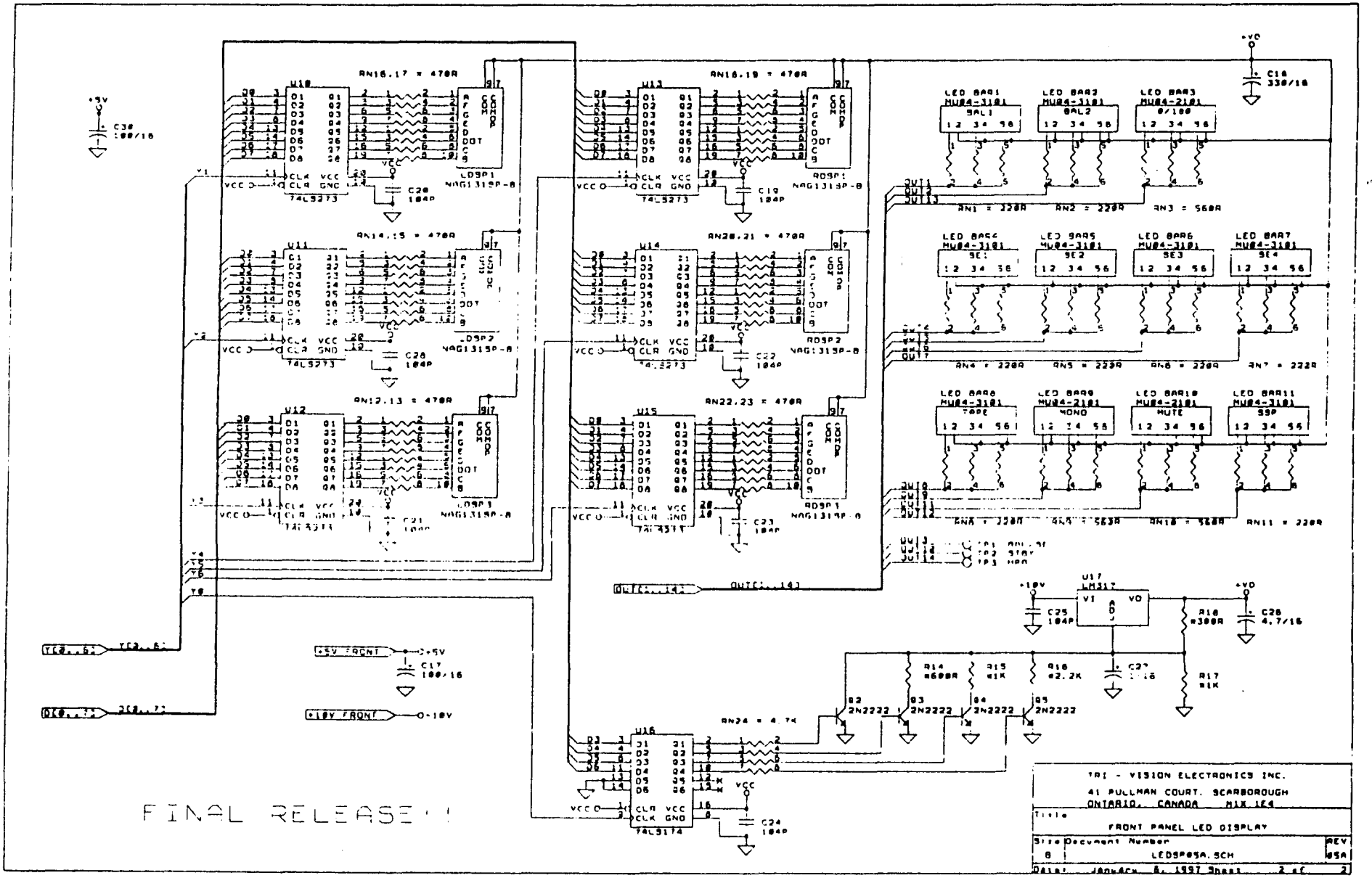

FINAL RELEASE!!
TRI - VISION ELECTRONICS INC.
41 PULLMAN COURT, SCARBOROUGH
ONTARIO, CANADA M1X 1E4
Title
FRONT PANEL LED DISPLAY
Size B
Document Number LEDSP05A.SCH
REV 05A
Date: January 6, 1997 Sheet 2 of 2

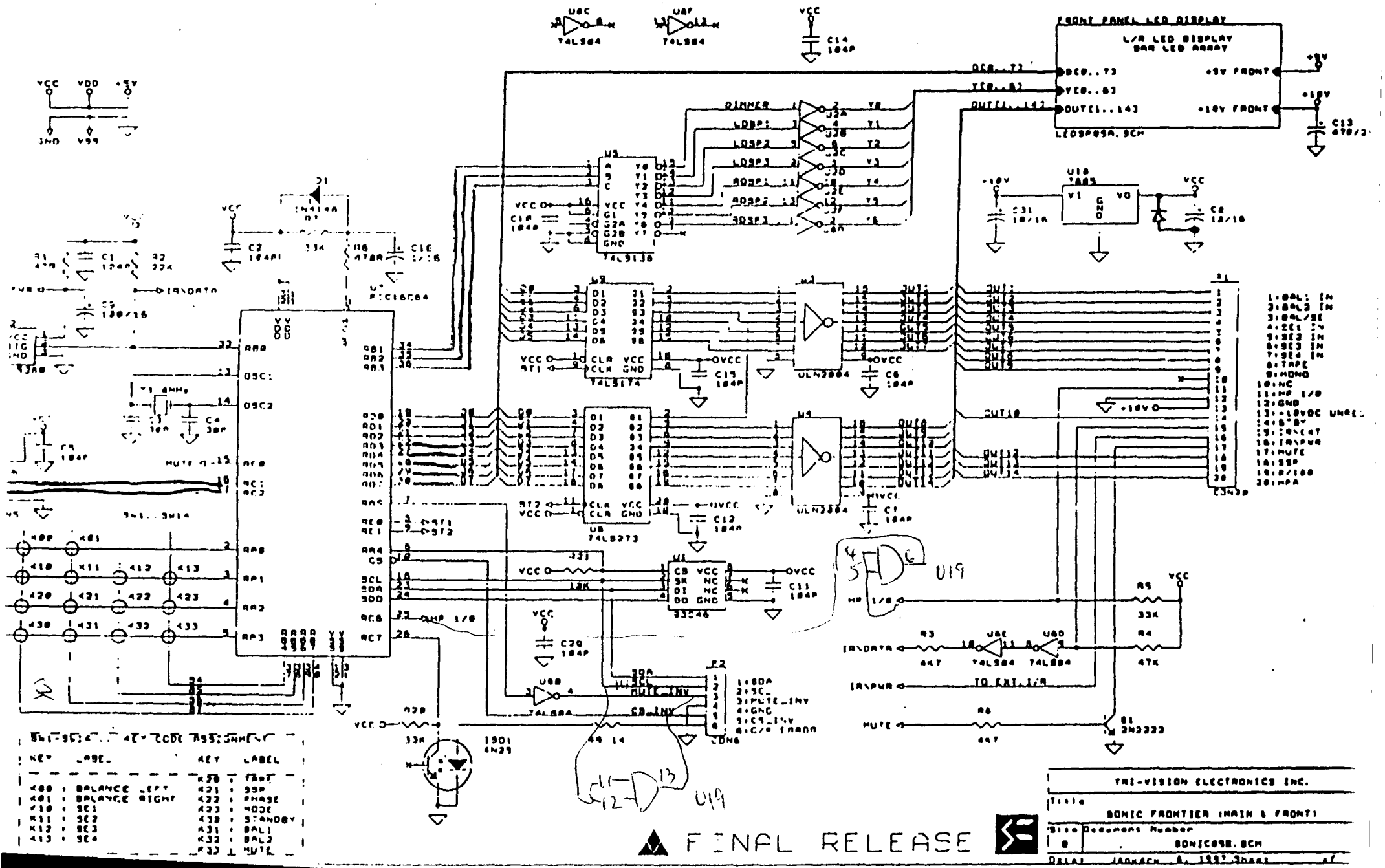

SW1-SW14 KEY CODE ASSIGNMENT

KEY	LABEL	KEY	LABEL
K00	BALANCE LEFT	K20	TAPE
K01	BALANCE RIGHT	K21	SSP
K10	SE1	K22	PHASE
K11	SE2	K23	MODE
K12	SE3	K30	STANDBY
K13	SE4	K31	BAL1
		K32	BAL2
		K33	MUTE

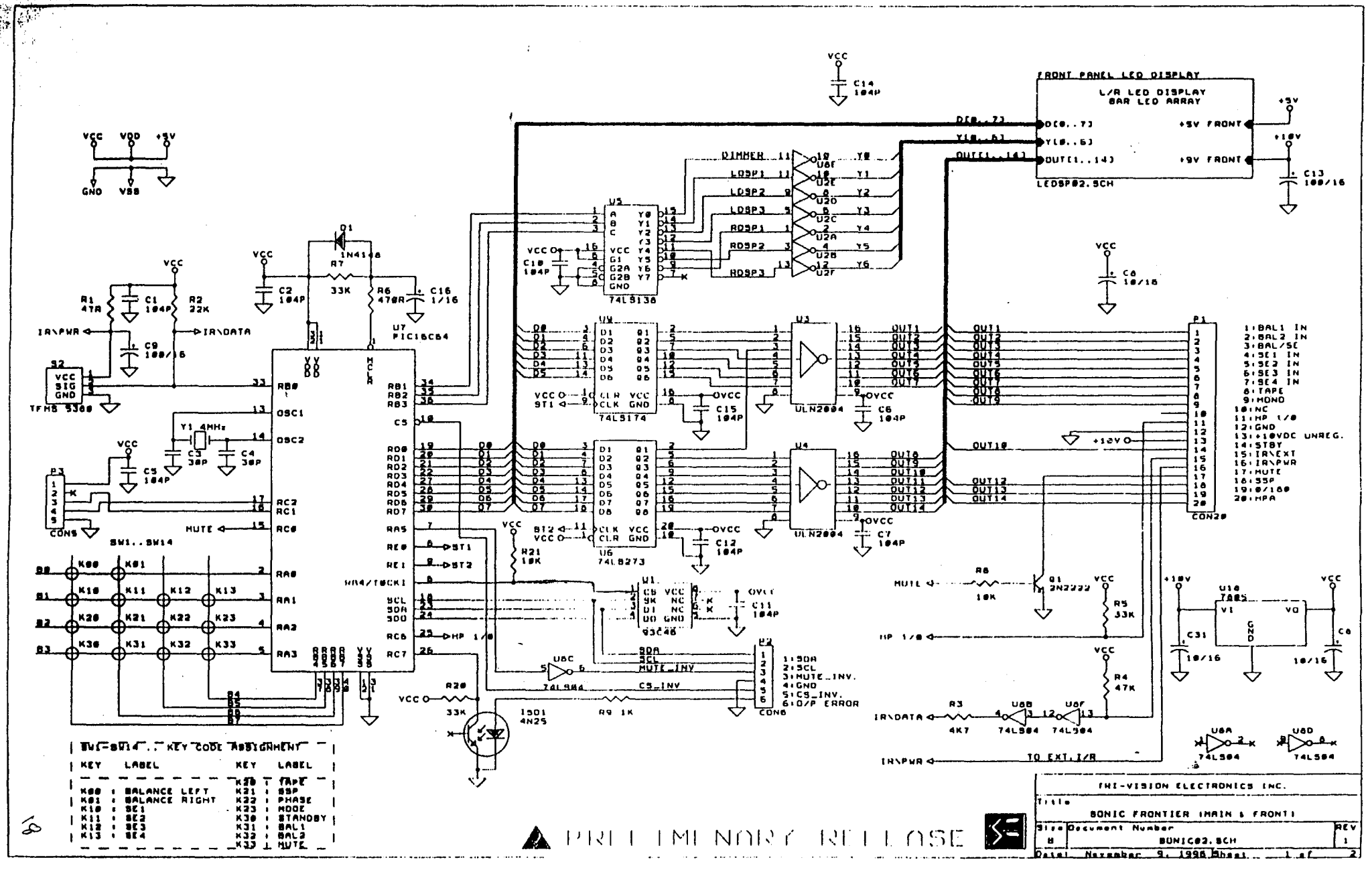
FRONT PANEL LED DISPLAY
L/R LED DISPLAY
BAR LED ARRAY
LEDSP02.SCH
+5V FRONT
+9V FRONT
+5V
+10V
C13 100/16
C14 104P
C8 10/16
VCC
VDD
+5V
GND
VSS
R1 47R
C1 104P
R2 22K
C9 100/16
IR\PWR
IR\DATA
S2
TFMS 5380
D1 1N4148
R7 33K
R6 470R
C16 1/16
C2 104P
U7 PIC16C64
Y1 4MHz
C3 30P
C4 30P
C5 104P
P3
CONS
MUTE
SW1..SW14
U5 74LS138
DIMMER
LDSP1
LDSP2
LDSP3
RDSP1
RDSP2
RDSP3
C10 104P
U9 74LS174
U6 74LS273
U3 ULN2004
U4 ULN2004
C15 104P
C6 104P
C12 104P
C7 104P
R21 10K
U1 93C46
C11 104P
U8C 74LS04
R20 33K
ISO1 4N25
R9 1K
P2 CON6
1:SDA
2:SCL
3:MUTE_INV.
4:GND
5:CS_INV.
6:O/P ERROR
P1 CON20
1:BAL1 IN
2:BAL2 IN
3:BAL/SE
4:SE1 IN
5:SE2 IN
6:SE3 IN
7:SE4 IN
8:TAPE
9:MONO
10:NC
11:HP 1/0
12:GND
13:+10VDC UNREG.
14:STBY
15:IR\EXT
16:IR\PWR
17:MUTE
18:SSP
19:0/180
20:HPA
+12V
R8 10K
Q1 2N2222
R5 33K
R4 47K
R3 4K7
U8B 74LS04
U8F 74LS04
U8A 74LS04
U8D 74LS04
U18 7805
C31 10/16
C8 10/16
TO EXT.I/R
SW1-SW14 .. KEY CODE ASSIGNMENT
KEY LABEL KEY LABEL
K00 : BALANCE LEFT
K01 : BALANCE RIGHT
K10 : SE1
K11 : SE2
K12 : SE3
K13 : SE4
K20 : TAPE
K21 : SSP
K22 : PHASE
K23 : MODE
K30 : STANDBY
K31 : BAL1
K32 : BAL2
K33 : MUTE
PRELIMINARY RELEASE
TRI-VISION ELECTRONICS INC.
Title
SONIC FRONTIER (MAIN & FRONT)
Size B
Document Number
SONIC02.SCH
REV 1
Date: November 9, 1996
Sheet 1 of 2

b

E.C.N.# : **PRODUCT :**

ENGINEERING CHANGE NOTICE

PRODUCT(S) AFFECTED Change or modification Temporary ( ) Permanent ( )	DATE OF ISSUE: ISSUED BY : APPROVED BY :

PURPOSE OF CHANGE(S) :

Line 2 Headphone Hum Reduction

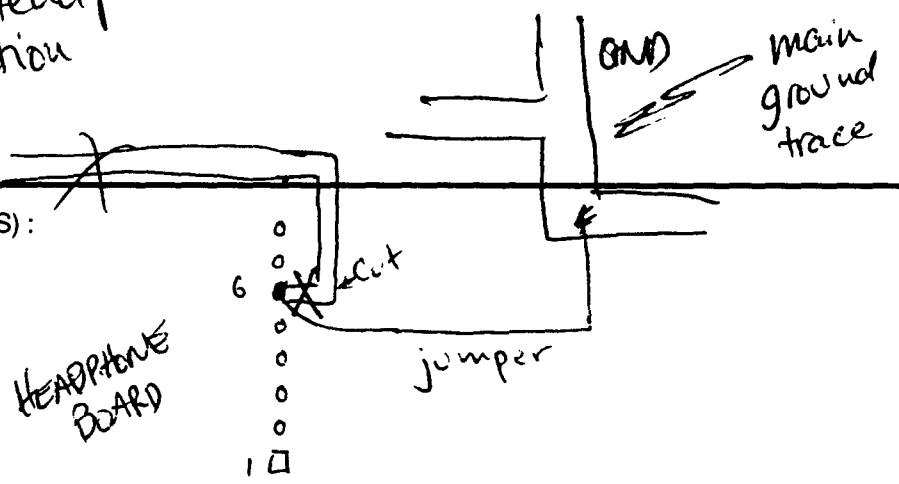

DESCRIPTION OF CHANGE(S) :

PART(S) AFFECTED :	PART #	LOCATION :	SKU# :
ADD :	PART #	LOCATION :	SKU# :
MODIFICATION DIAGRAM : See attached sheet		C.C I. Driver T. Nguyen A. Jez K. Wilk N. Platsis	CONFIRMED :

LEFT AND RIGHT CHANNEL

PART OF MAIN PCB LINE 1,2

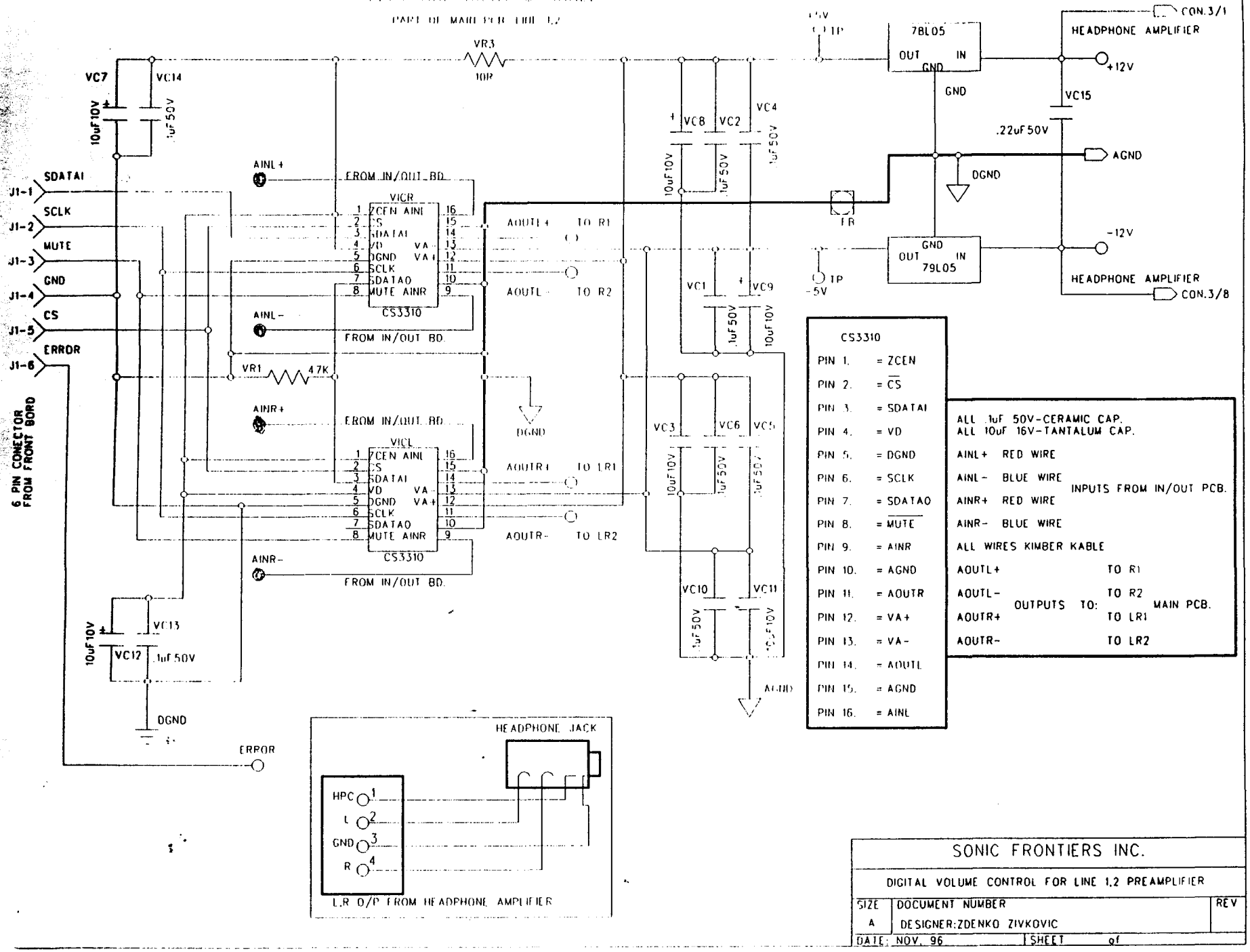

CS3310

PIN 1.	= $\overline{ZCEN}$
PIN 2.	= $\overline{CS}$
PIN 3.	= SDATAI
PIN 4.	= VD
PIN 5.	= DGND
PIN 6.	= SCLK
PIN 7.	= SDATAO
PIN 8.	= $\overline{MUTE}$
PIN 9.	= AINR
PIN 10.	= AGND
PIN 11.	= AOUTR
PIN 12.	= VA+
PIN 13.	= VA-
PIN 14.	= AOUTL
PIN 15.	= AGND
PIN 16.	= AINL

ALL 1uF 50V-CERAMIC CAP.
ALL 10uF 16V-TANTALUM CAP.

INPUTS FROM IN/OUT PCB.
- AINL+ RED WIRE
- AINL- BLUE WIRE
- AINR+ RED WIRE
- AINR- BLUE WIRE

ALL WIRES KIMBER KABLE

OUTPUTS TO: MAIN PCB.
- AOUTL+ TO R1
- AOUTL- TO R2
- AOUTR+ TO LR1
- AOUTR- TO LR2

SONIC FRONTIERS INC.

DIGITAL VOLUME CONTROL FOR LINE 1,2 PREAMPLIFIER

SIZE	DOCUMENT NUMBER	REV
A	DESIGNER:ZDENKO ZIVKOVIC	
DATE: NOV. 96	SHEET of	

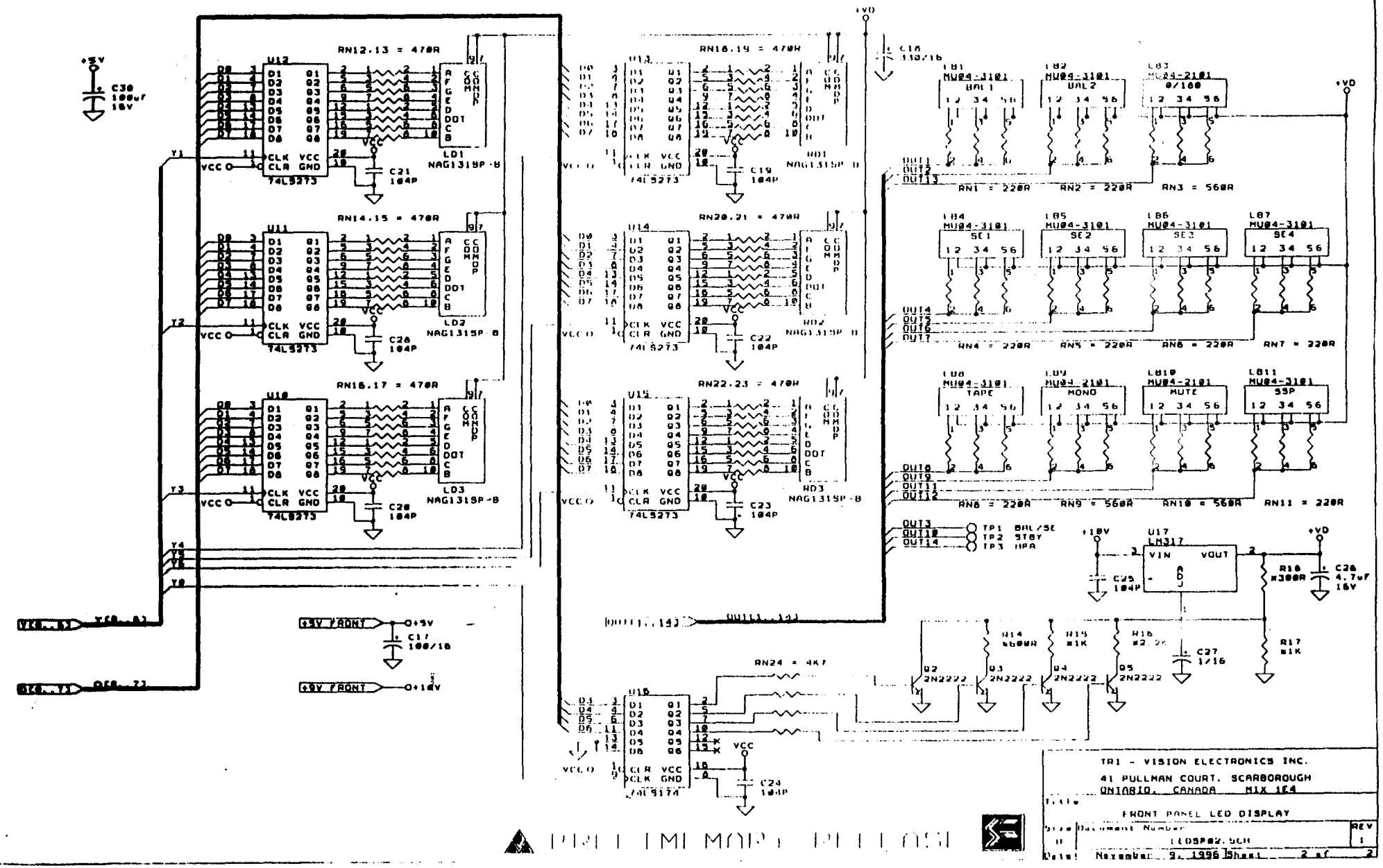

RN12.13 = 470R
RN14.15 = 470R
RN16.17 = 470R
RN18.19 = 470R
RN20.21 = 470R
RN22.23 = 470R
RN24 = 4K7
74LS273
74LS174
LD1 NAG1315P-B
LD2 NAG1315P-B
LD3 NAG1315P-B
RD1 NAG1315P-B
RD2 NAG1315P-B
RD3 NAG1315P-B
LB1 MU04-3101 BAL1
LB2 MU04-3101 BAL2
LB3 MU04-2101 0/180
LB4 MU04-3101 SE1
LB5 MU04-3101 SE2
LB6 MU04-3101 SE3
LB7 MU04-3101 SE4
LB8 MU04-3101 TAPE
LB9 MU04-2101 MONO
LB10 MU04-2101 MUTE
LB11 MU04-3101 SSP
RN1 = 220R
RN2 = 220R
RN3 = 560R
RN4 = 220R
RN5 = 220R
RN6 = 220R
RN7 = 220R
RN8 = 220R
RN9 = 560R
RN10 = 560R
RN11 = 220R
TP1 BAL/SE
TP2 STBY
TP3 HPA
U17 LM317
VIN
VOUT
ADJ
R18 ≈300R
C26 4.7uF 16V
C25 104P
C27 1/16
R17 ≈1K
R14 ≈600R
R15 ≈1K
R16 ≈2.2K
Q2 2N2222
Q3 2N2222
Q4 2N2222
Q5 2N2222
C24 104P
C30 100uF 16V
C17 100/16
+5V FRONT
+9V FRONT
+10V
+5V
+VD
VCC
TR1 - VISION ELECTRONICS INC.
41 PULLMAN COURT, SCARBOROUGH
ONTARIO, CANADA M1X 1E4
Title
FRONT PANEL LED DISPLAY
Size
Document Number
LEDSP02.SCH
REV
1
Date: November 9, 1996
Sheet 2 of 2

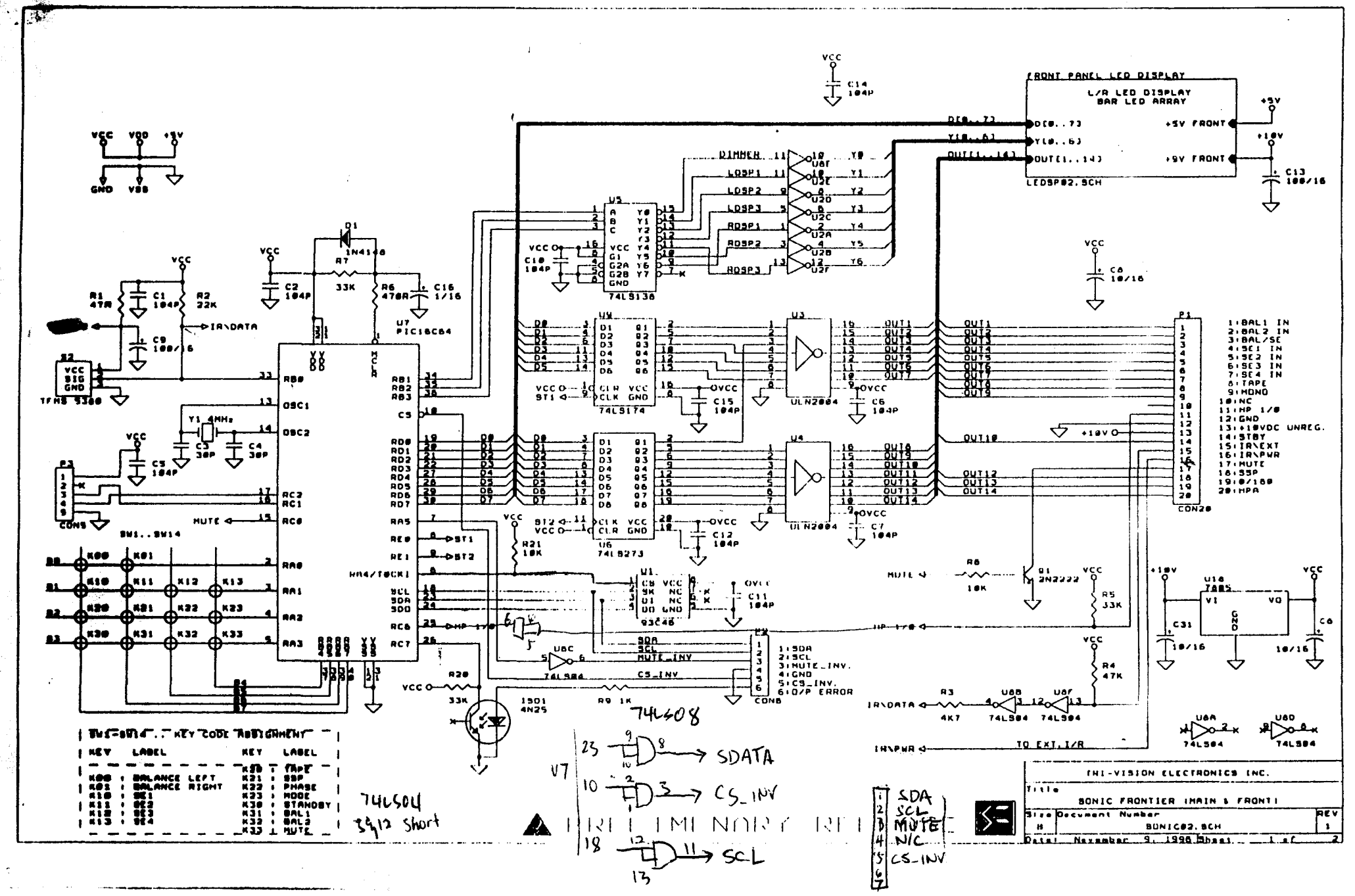
FRONT PANEL LED DISPLAY
L/R LED DISPLAY
BAR LED ARRAY
LEDSP02.SCH
+5V FRONT
+9V FRONT
74LS138
74LS174
74LS273
ULN2004
93C46
PIC16C64
TFMS 5380
CON20
CON8
1:BAL1 IN
2:BAL2 IN
3:BAL/SE
4:SE1 IN
5:SE2 IN
6:SE3 IN
7:SE4 IN
8:TAPE
9:MONO
10:NC
11:HP 1/0
12:GND
13:+10VDC UNREG.
14:STBY
15:IR\EXT
16:IR\PWR
17:MUTE
18:SSP
19:0/180
20:HPA
1:SDA
2:SCL
3:MUTE_INV.
4:GND
5:CS_INV.
6:O/P ERROR
SW1..SW14 .. KEY CODE ASSIGNMENT
KEY LABEL KEY LABEL
K00 : BALANCE LEFT K20 : TAPE
K01 : BALANCE RIGHT K21 : SSP
K10 : SE1 K22 : PHASE
K11 : SE2 K23 : MODE
K12 : SE3 K30 : STANDBY
K13 : SE4 K31 : BAL1
K32 : BAL2
K33 : MUTE
74LS04
3&12 Short
74LS08
SDATA
CS_INV
SCL
TRI-VISION ELECTRONICS INC.
Title
SONIC FRONTIER (MAIN & FRONT)
Size B
Document Number
SONIC02.SCH
REV 1
Date: November 9, 1998
Sheet 1 of 2