7. SCHEMATIC DIAGRAM

7-1. SANSUI 221 Schematic Diagram
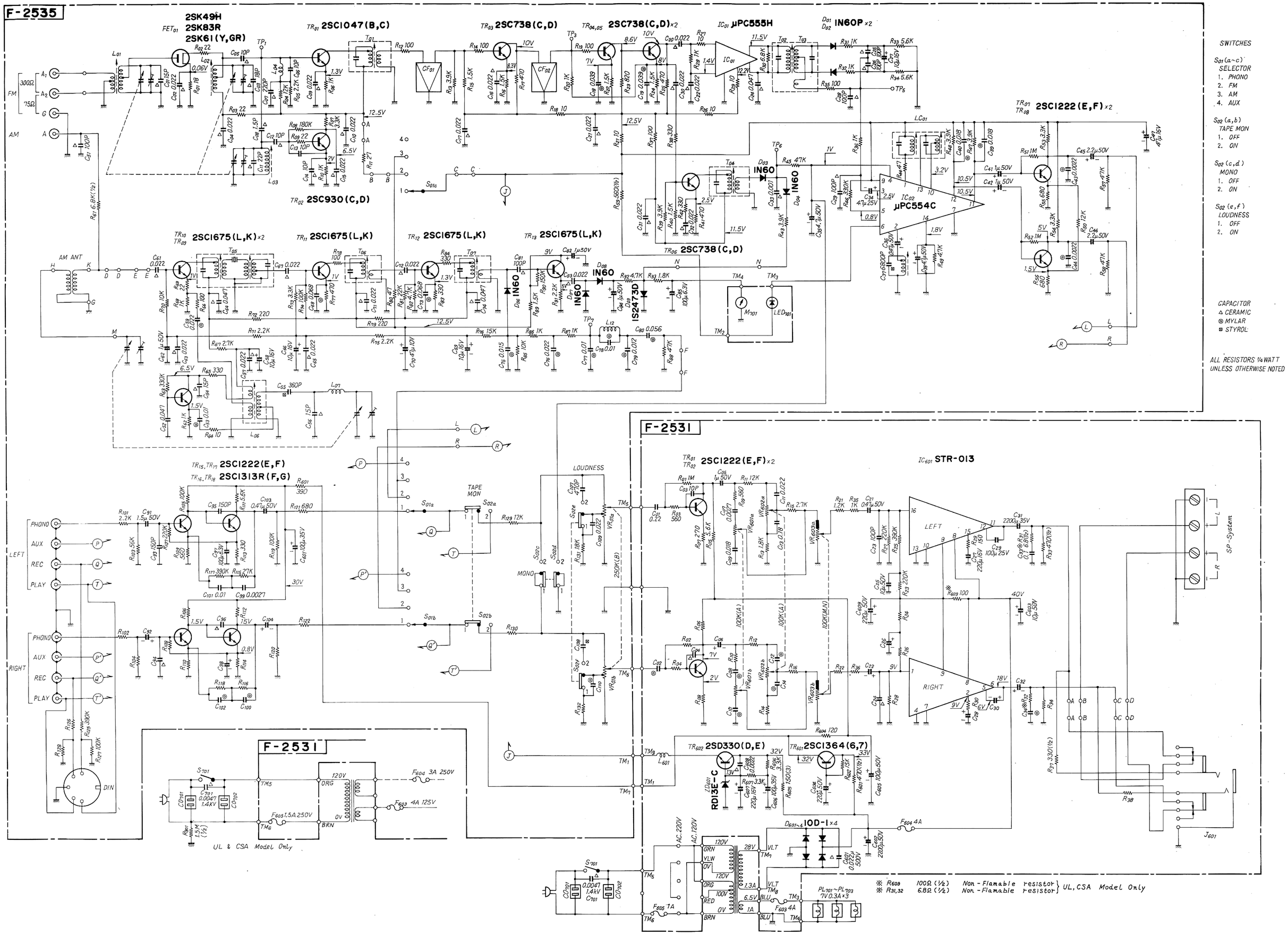
* Design and specifications subject to change without notice for improvements.