7-2. SANSUI 331 Schematic Diagram
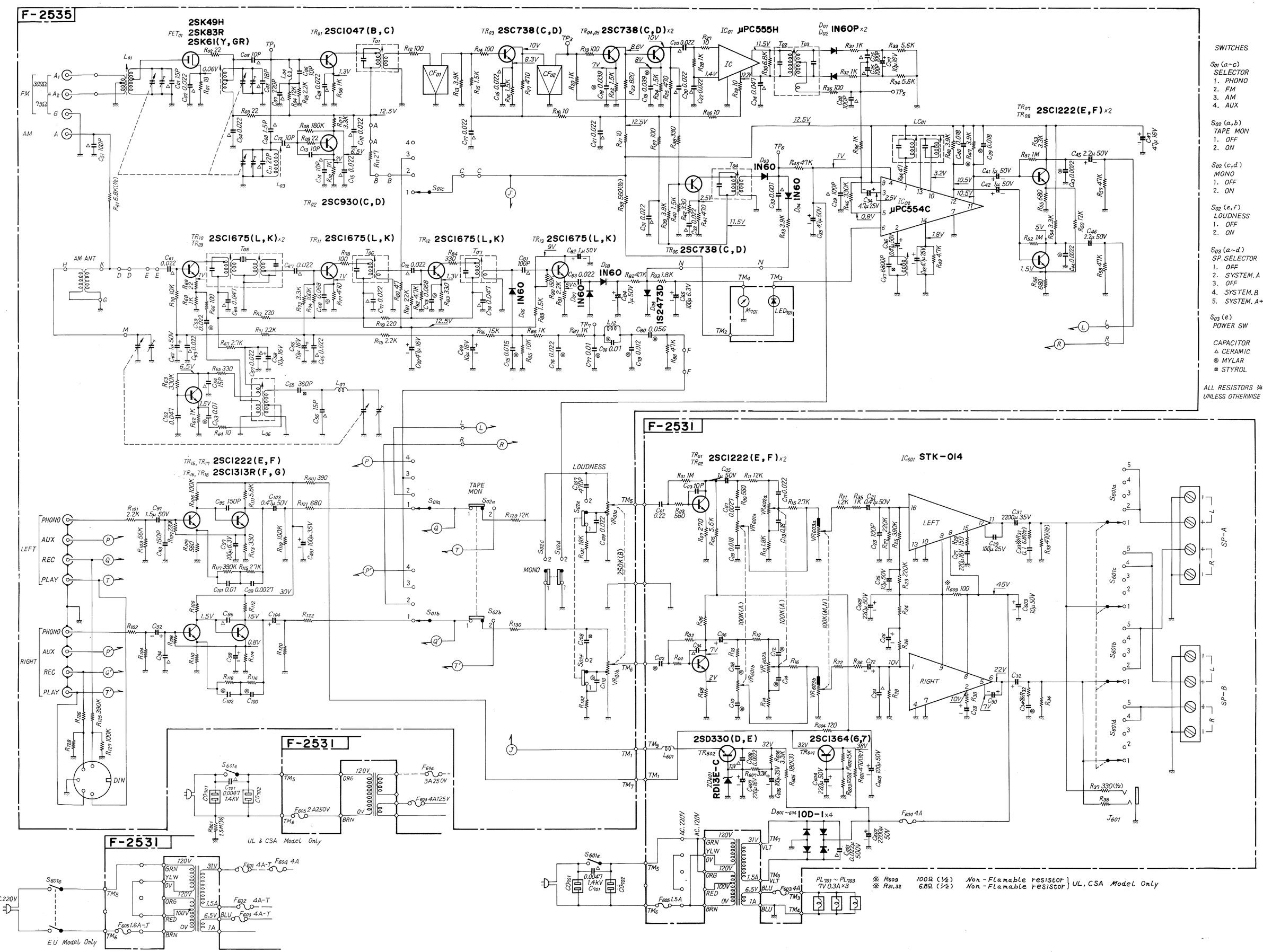
* Design and specifications subject to change without notice for improvements.