7-3. SANSUI 331L Schematic Diagram
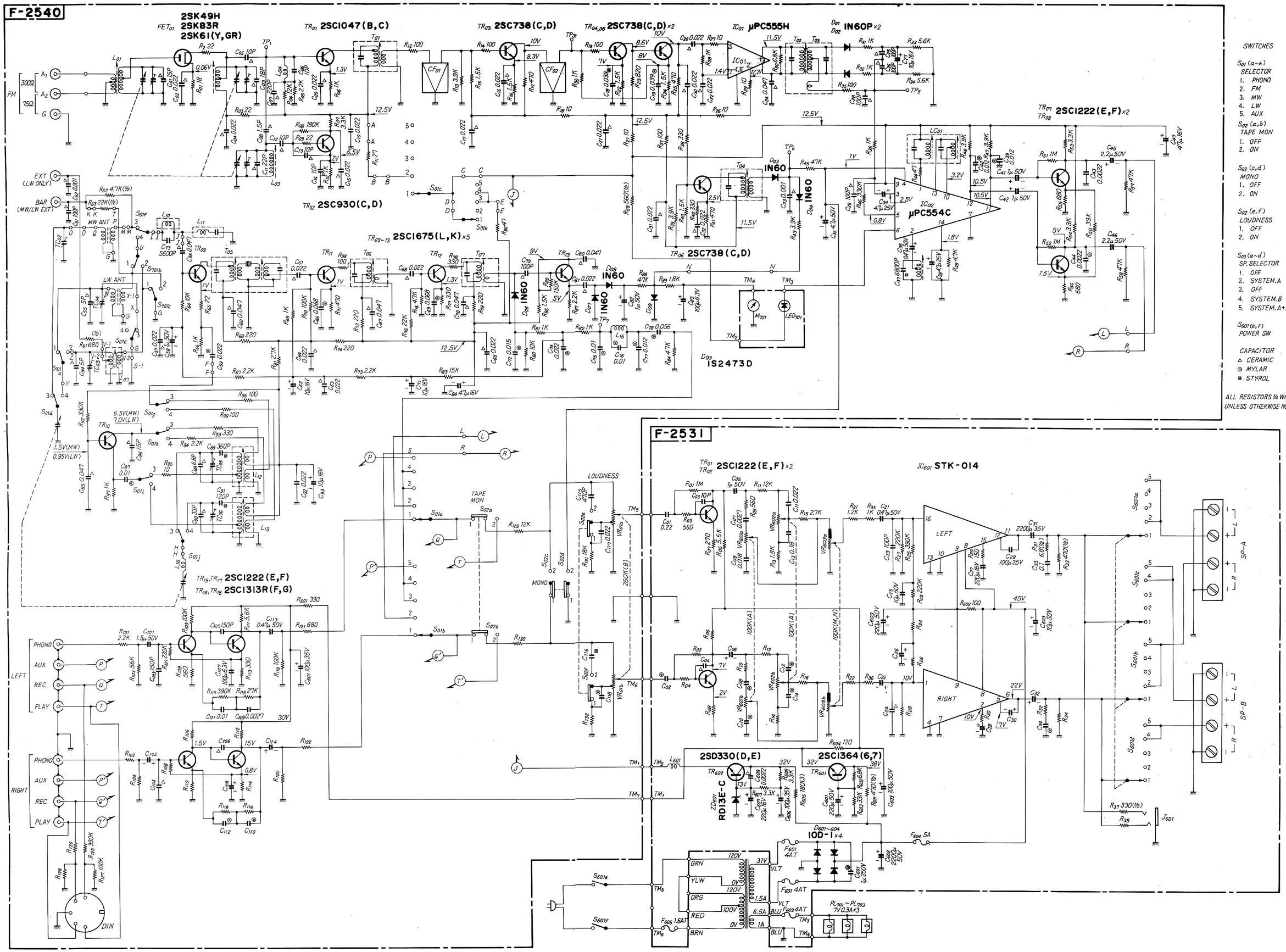
* Design and specifications subject to change without notice for improvements.