SERVICE MANUAL

INTEGRATED AMPLIFIER

SANSUI AU-D77X

CAUTION

1. Parts identified by the ⚠ symbol on the schematic diagram and the parts list are critical for safety. Use only replacement parts that have critical characteristics recommended by the manufacturer.
2. Make leakage-current or resistance measurements to determine that exposed parts are acceptably insulated from the supply circuit before returning the appliance to the customer.

Sansui

SANSUI ELECTRIC CO., LTD.

•Specifications

Power output
Min. RMS, both channels driven, from 10 to 20,000 Hz, with no more than 0.003% total harmonic distortion.
110 watts per channel into 8 ohms.
Load impedance..... 8 ohms
Total harmonic distortion..... less than 0.003% at or below rated min. RMS power output
Intermodulation distortion (60 Hz: 7 kHz=4:1 SMPTE method)
..... less than 0.003% at rated power output
Frequency response (at 1 watt)
Overall (from AUX)..... DC to 200,000 Hz, +0 dB −3.0 dB
RIAA curve deviation (DISC-MM, 20 Hz to 20 kHz)
..... +0.2 dB, −0.2 dB
Input sensitivity and impedance (at 1 kHz)
DISC-MC..... 120 μV/3~40 ohms
DISC-MM..... 2.5 mV/47 kilohms
(Max. input capability; 200 mV at 1 kHz, less than 0.01% total harmonic distortion)
DISC-DA..... 150 mV/35 kilohms
AUX, TUNER, TAPE PLAY-1, 2
..... 150 mV/35 kilohms
Output level (1,000 Hz)
TAPE REC-1, 2..... 150 mV into 47 kilohms
Signal to noise ratio (short-circuit, A-network)
DISC-MC..... 78 dB
DISC-MM..... 85 dB
AUX, TUNER, TAPE PLAY-1, 2
..... 110 dB
Controls
SUPER BASS..... ±10 dB at 100 Hz
BASS..... ±10 dB at 330 Hz
MID..... ±10 dB at 1 kHz
MID.HIGH..... ±10 dB at 3.3 kHz
TREBLE..... ±10 dB at 10 kHz
Filter
LOW..... −3 dB at 16 Hz (6 dB/oct)
HIGH..... −3 dB at 20 kHz (6 dB/oct)
LOUDNESS..... +8 dB at 50 Hz
(VOLUME: −30 dB position)
..... +6 dB at 10 kHz
Power requirement
Power voltage..... 120/220/240V (50/60 Hz)
For U.S.A. & Canada .... 120V (60 Hz)
Power consumption..... 390 watts 460 VA Rated
560 wats Maximum
Dimensions..... 430 mm (16-15/16") W
145 mm (5-3/4") H
333 mm (13-1/8") D
Weight..... 11.7 kg (25.8 lbs) net
13.0 kg (28.7 lbs) packed

• Design and specifications subject to changes without notice for improvements.

CAUTION

1. The symbols, UL, CSA, BS, UK, EU, AS and XX on the parts list and the schematic diagram mean followings respectively.

   UL..... Manufactured for U.S.A market.
   (Underwriters Laboratories approved model.)
   CSA..... Manufactured for Canadian market.
   BS, UK ..... Manufactured for United Kingdom market.
   EU ..... Manufactured for European market.
   AS..... Manufactured for Australian market.
   XX..... Standard Version.
   NON MARK ..... Common Parts.

2. Some printed circuit boards are not supplied as the assembled. To separate these in this service manual, the stock No's are not indicated at the ends of the board names. However, the individual parts on the circuit boards are provided by orders.

3. Since some of capacitors and resistors are omitted from parts lists in this service manual, refer to the Common Parts List for capacitors & resistors, which was issued on February 1983.

4. Abbreviations in this service manual are as follows.

•Abbreviations List

C.R.	: Carbon Resistor	E.B.	: Bi-Polar Electrolytic Capacitor
S.R.	: Solid Resistor	E.B.L.	: Low Leak Bi-Polar Electrolytic Capacitor
Ce.R.	: Cement Resistor	Ta.C.	: Tantalum Capacitor
M.R.	: Metal Film Resistor	F.C.	: Film Capacitor
F.R.	: Fusing Resistor	M.P.	: Metalized Paper Capacitor
N.I.R.	: Non-Inflammable Resistor	P.C.	: Polystyrene Capacitor
A.R.	: Array Resistor	G.C.	: Gimmic Capacitor
C.C.	: Ceramic Capacitor	A.C.	: Array Capacitor
C.T.	: Ceramic Capacitor, Temoerature Compensation	V.R.	: Variable Resistor
E.C.	: Electrolytic Capacitor	S.V.R.	: Semi Variable Resistor
E.L.	: Low Leak Electrolytic Capacitor	SW.	: Switch

1. BLOCK DIAGRAM

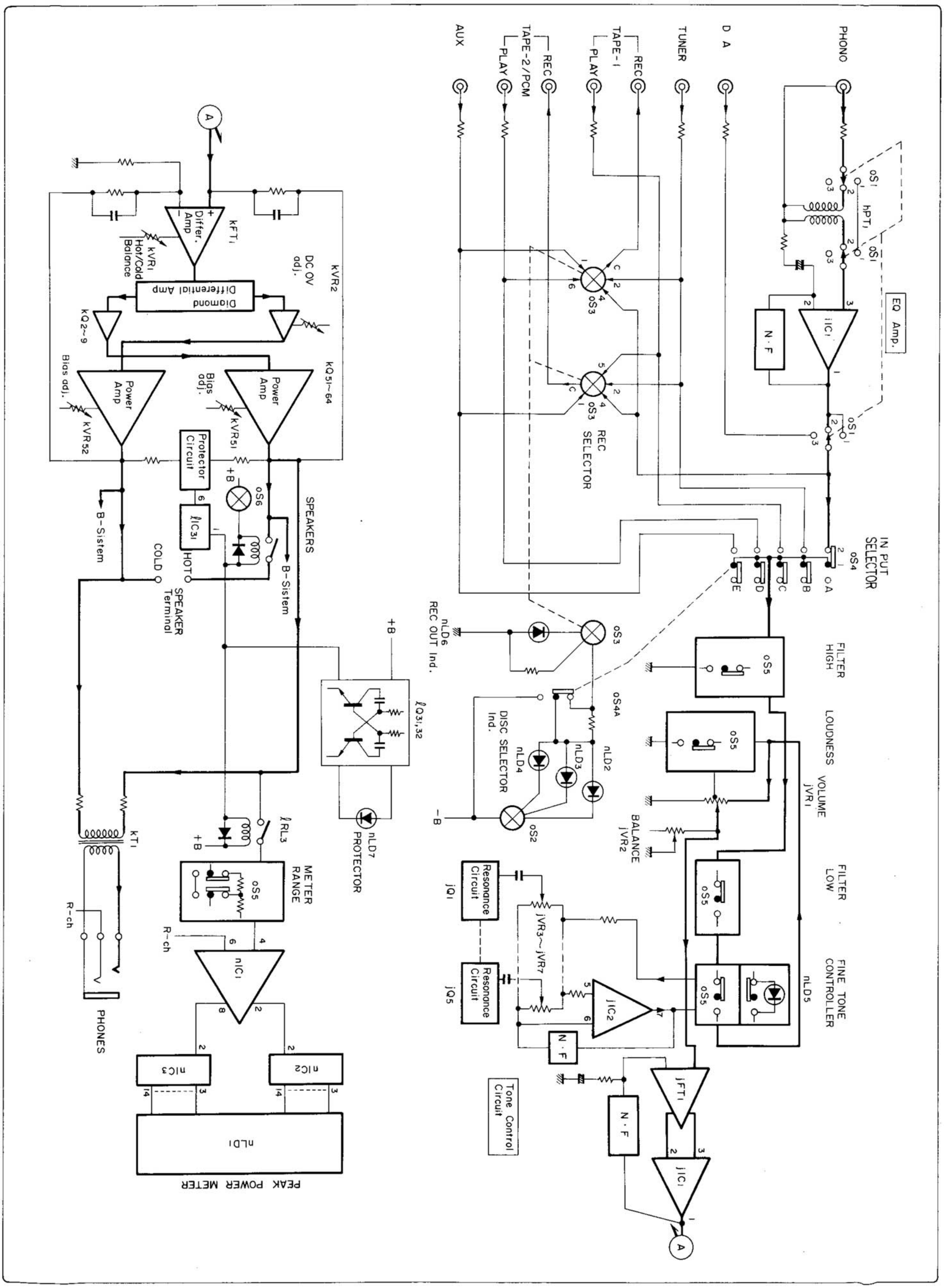

2. ADJUSTMENTS (See Top View on page 9)

2-1. Driver Circuit Adjustment

Note: 1) Master Volume .... Minimum
2) Room Temperature ... 18°C~28°C (65°F~83°F)
3) Before turning ON power switch, set kVR1 on F-4264 and F-4265 to center position.
4) Before turning ON power switch, set kVR51 and kVR52 on F-4295 fully counterclockwise.
5) For adjustment, run the unit for more than 3 minutes after the power is switched on.
6) This bias current adjustment converts current value into voltage by ohms law.

STEP	SUBJECT	MEASURE OUTPUT	ADJUST	ADJUST FOR
1.	Hot/Cold Balance Adj. L-CH	Speaker Terminal (L-ch)	kVR1, L-ch (F-4264)	DC 0V ± 5mV
2.	Hot/Cold Balance ADj. R-CH	Speaker Terminal (R-ch)	kVR1, R-ch (F-4265)	DC 0V ± 5mV
3.	Bias Current Adj. L-CH (HOT Side Amp.)	Between emitters of power transistors (kQ61 & kQ63) (Across kR68)	kVR51, L-ch (F-4295)	DC 30mV ± 3mV
	Bias Current Adj. L-CH (COLD Side Amp.)	Between emitters of power transistors (kQ62 & kQ64) (Across kR69)	kVR52, L-ch (F-4295)	DC 30mV ± 3mV
4.	Bias Current Adj. R-CH (HOT Side Amp.)	Between emitters of power transistors (kQ61 & kQ63) (Across kR68)	kVR51, R-ch (F-4295)	DC 30mV ± 3mV
	Bias Current Adj. R-CH (COLD Side Amp.)	Between emitters or power transistors (kQ62 & kQ64) (Across kR69)	kVR52, R-ch (F-4295)	DC 30mV ± 3mV
5.	DC 0V Adj. L-CH	Between hot side speaker terminal & earth.	kVR2, L-ch (F-4264)	DC 0V ± 5mV
	DC 0V Adj. R-CH	Between hot side speaker terminal & earth.	kVR2, R-ch (F-4265)	DC 0V ± 5mV

3. PARTS LOCATION & PARTS LIST

3-1. F-3725 EQ Amp. Circuit Board

(Stock No. 00765701)

Component Side

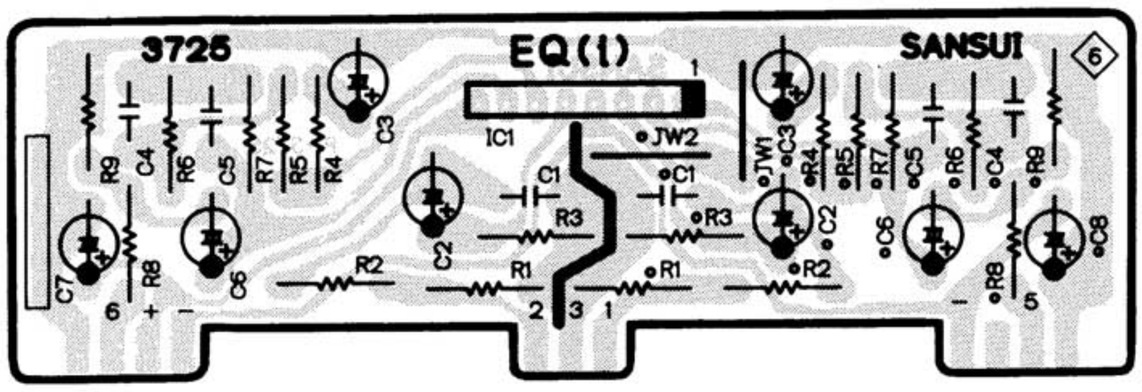

Parts List

Parts No.	Stock No.	Description
•IC		
iIC1	46078900	M5218L

3-2. F-4264 Driver Amp. (L-ch) Circuit Board

(Stock No. 00765801)

Component Side

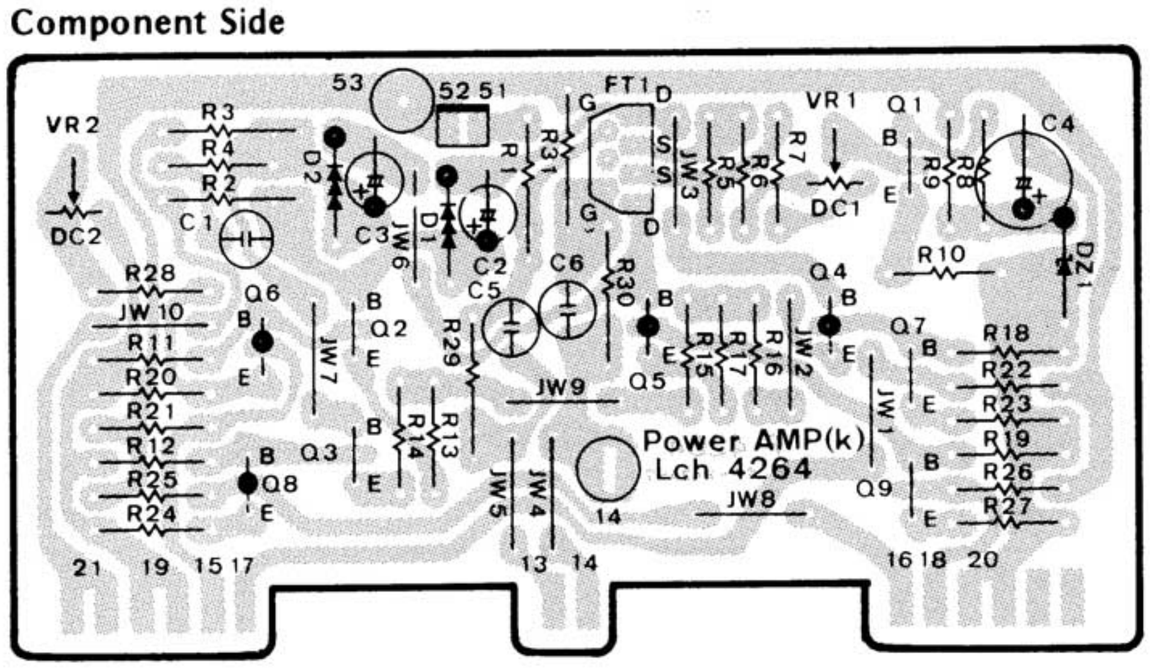

Parts List

Parts No.	Stock No.	Description
•Transistor		
kQ1	46581701	2SC1845
kQ2	46581701	2SC1845
kQ3	46581701	2SC1845
kQ4	46581601	2SA992
kQ5	46581601	2SA992
kQ6	46728201	2SA1145
kQ7	46728301	2SC2705
kQ8	46728201	2SA1145
kQ9	46728301	2SC2705
•FET		
kFT1	46723601	2SK389-BL
	or 46723602	2SK389-V
•Varistor		
kD1	03401700	MV103
kD2	03401700	MV103
•Zener Diode		
kDZ1	03179000	RD13E-B
⚠ kR51	46228600	47Ω 1/2W N.I.R.
kVR1	46737800	100Ω S.V.R., Hot/Cold Balance adj.
kVR2	46737900	470Ω S.V.R., DC 0V adj.

3-3. F-4265 Driver Amp. (R-ch) Circuit Board

(Stock No. 00765901)

Component Side

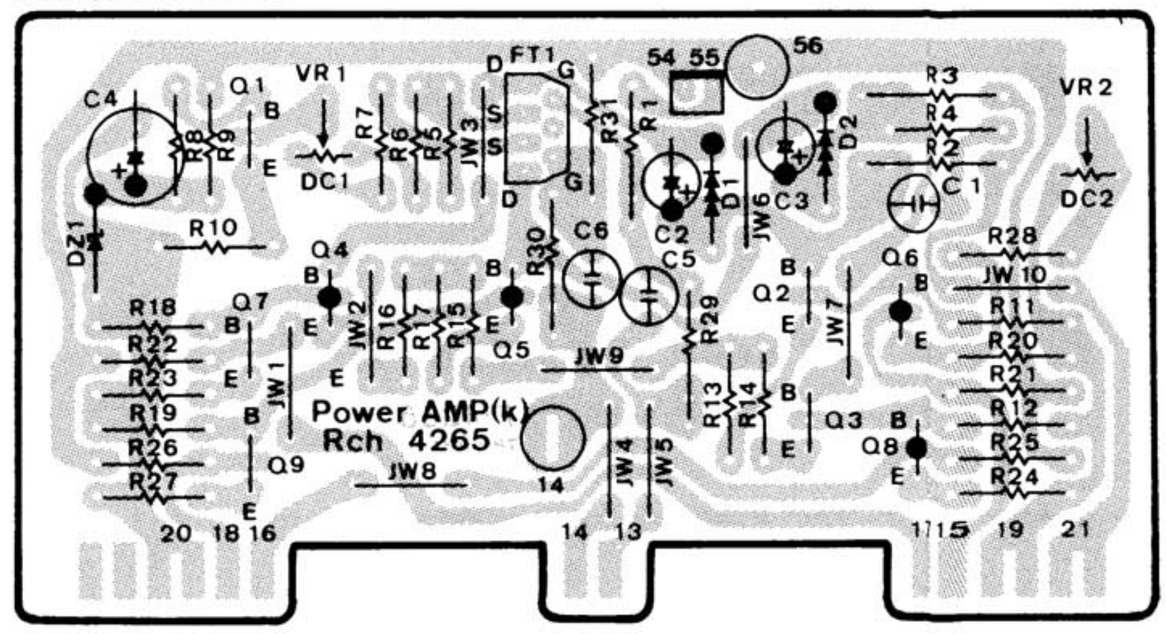

Parts List

Parts No.	Stock No.	Description
•Transistor		
kQ1	46581701	2SC1845
kQ2	46581701	2SC1845
kQ3	46581701	2SC1845
kQ4	46581601	2SA992
kQ5	46581601	2SA992
kQ6	46728201	2SA1145
kQ7	46728301	2SC2705
kQ8	46728201	2SA1145
kQ9	46728301	2SC2705
•FET		
kFT1	46723601	2SK389-BL
	or 46723602	2SK389-V
•Varistor		
kD1	03401700	MV103
kD2	03401700	MV103
•Zener Diode		
kDZ1	03179000	RD13E-B
⚠ kR52	46228600	47Ω 1/2W N.I.R.
kVR1	46737800	100Ω S.V.R., Hot/Cold Balance adj
kVR2	46737900	470Ω S.V.R., DC 0V adj.

3-4. F-4268 Protector (L-ch) Circuit Board

(Stock No. 00766001)

Component Side

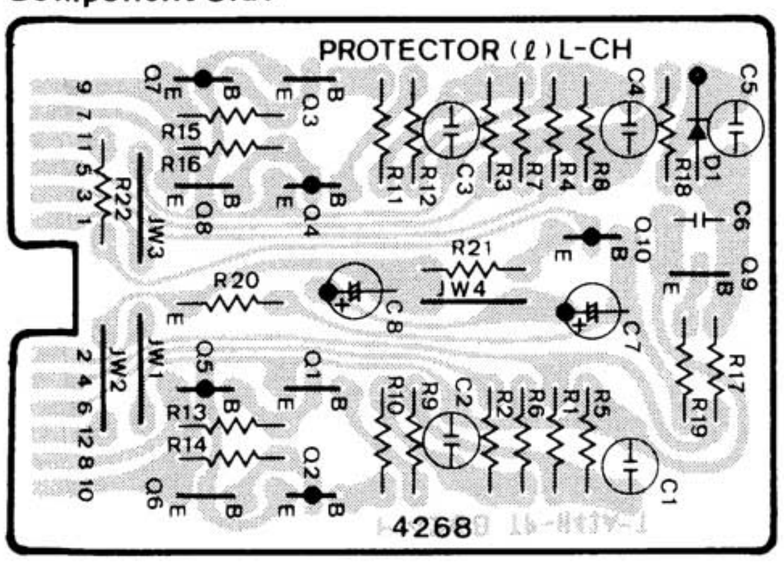

Parts List

Parts No.	Stock No.	Description
•Transistor		
IQ1	46367101	2SC2603
IQ2	46367001	2SA1115
IQ3	46367101	2SC2603
IQ4	46367001	2SA1115
IQ5	46367001	2SA1115
IQ6	46367101	2SC2603
IQ7	46367001	2SA1115
IQ8	46367101	2SC2603
IQ9	46367101	2SC2603
IQ10	46367001	2SA1115
•Diode		
ID1	03117600	1S2473T77
	or 46086000	1S1588TP-3

3-5. F-4269 Protector (R-ch) Circuit Board

(Stock No. 00766101)

Component Side

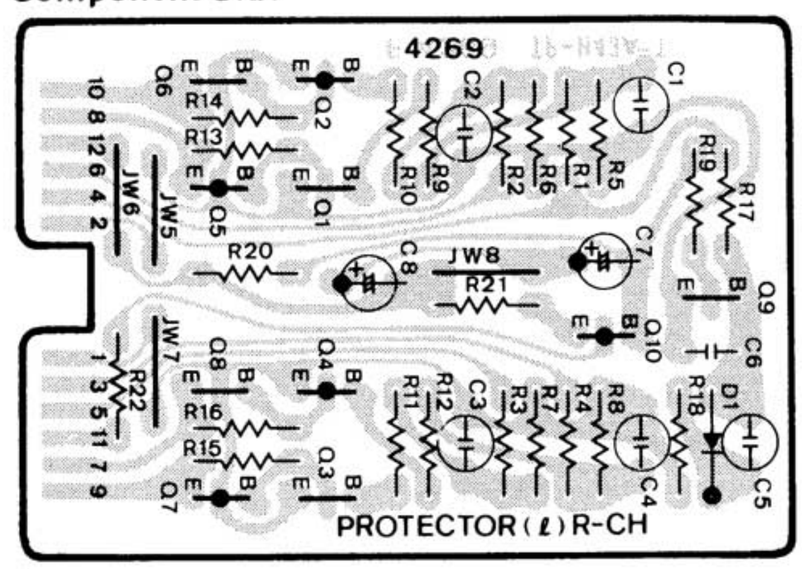

Parts List

Parts No.	Stock No.	Description
•Transistor		
IQ1	46367101	2SC2603
IQ2	46367001	2SA1115
IQ3	46367101	2SC2603
IQ4	46367001	2SA1115
IQ5	46367001	2SA1115
IQ6	46367101	2SC2603
IQ7	46367001	2SA1115
IQ8	46367101	2SC2603
IQ9	46367101	2SC2603
IQ10	46367001	2SA1115
•Diode		
ID1	03117600	1S2473T77
	or 46086000	1S1588TP-3

3-6. F-4277 INPUT SELECTOR Circuit Board

Component Side

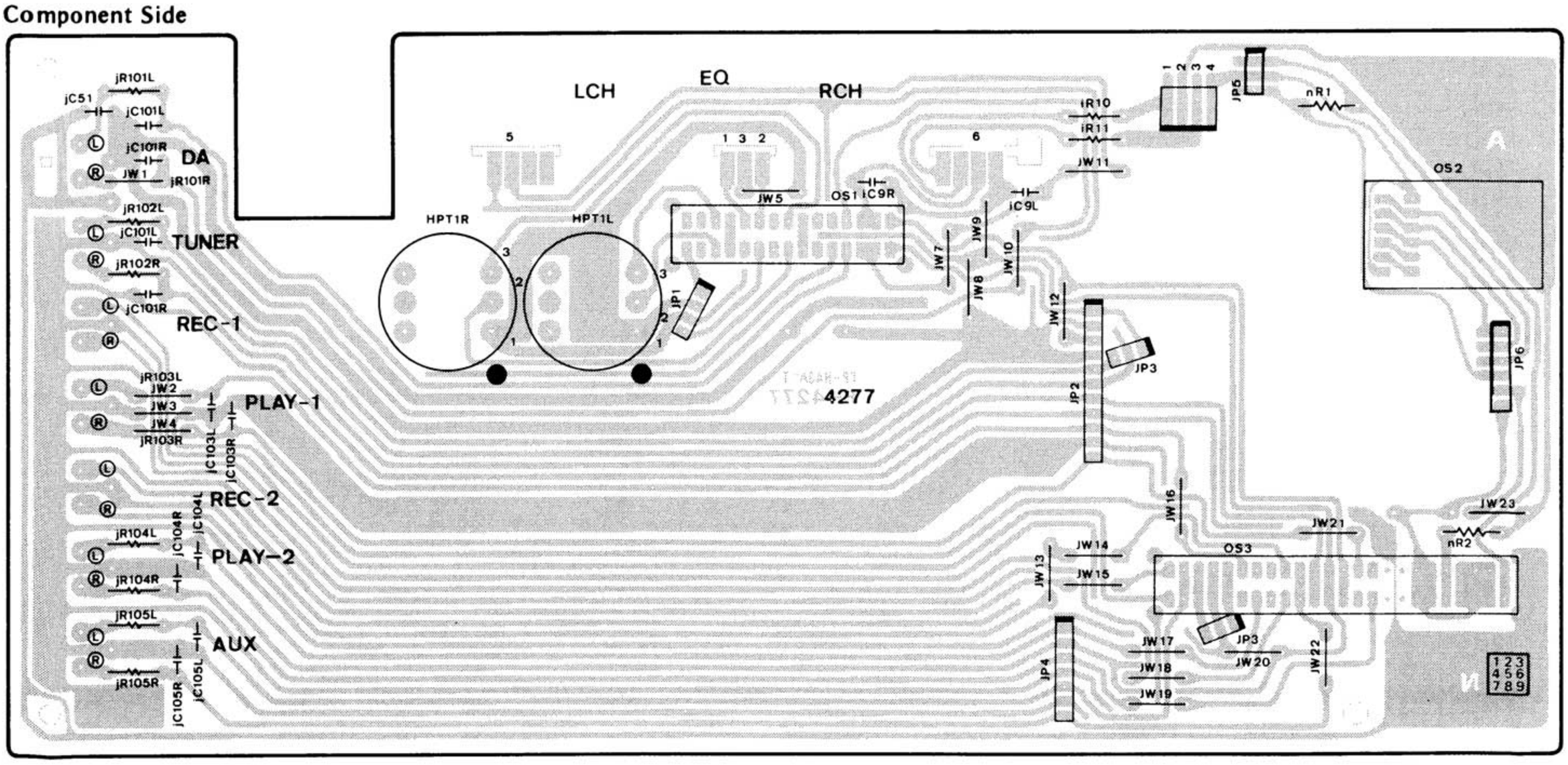

Parts List

Parts No.	Stock No.	Description
hPT1	46555800	MC Head Transformer
⚠ iR10	46229000	100Ω 1/2W N.I.R.
⚠ iR11	46229000	100Ω 1/2W N.I.R.
⚠ nR1	08924200	1.2kΩ 1/2W N.I.R.
⚠ nR2	08924100	1kΩ 1/2W N.I.R.
⚠ nR3	08924100	1kΩ 1/2W N.I.R.

Parts List

	Stock No.	Description
oS1	46731600	Slide SW., DISC SELECTOR
oS2	46731700	Rotary SW., DISC SELECTOR Ind.
oS3	46730500	Slide Rotary SW., REC SELECTOR
	46438100	2P Terminal Board, TAPE-1, TUNER, DISC
	46363900	6P Terminal Board, TAPE-2/PCM, AUX

3-7. F-4278 INPUT SELECTOR SW. Board

Component Side

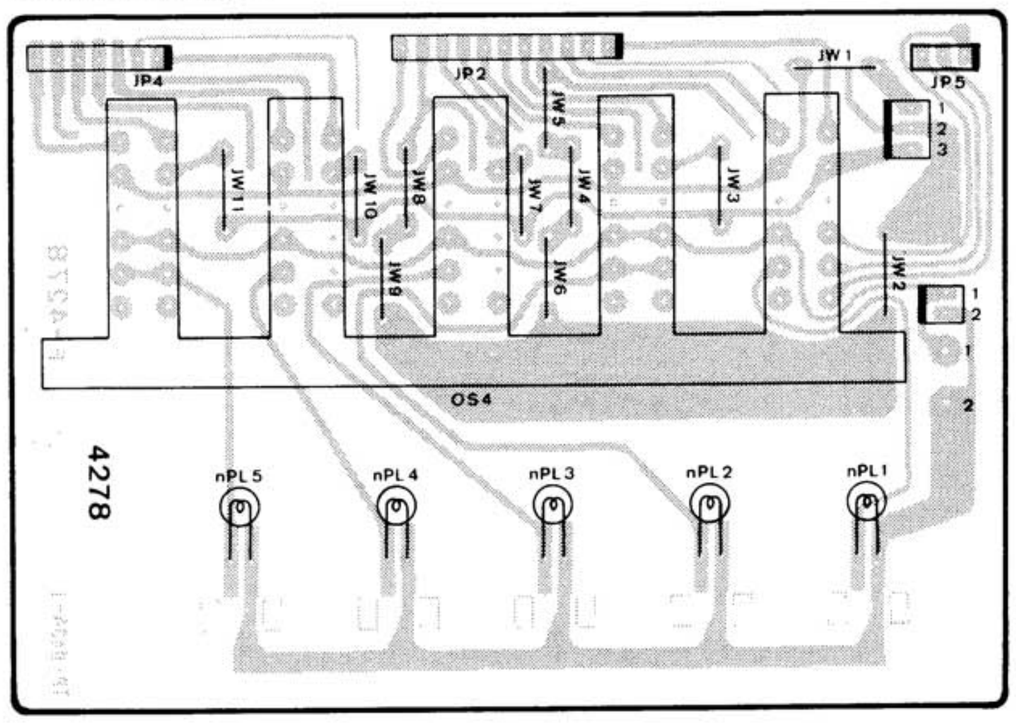

Parts List

Parts No.	Stock No.	Description
nPL1	46730100	Pilot Lamp 8V 0.1A
nPL2	46730100	Pilot Lamp 8V 0.1A
nPL3	46730100	Pilot Lamp 8V 0.1A
nPL4	46730100	Pilot Lamp 8V 0.1A
nPL5	46730100	Pilot Lamp 8V 0.1A
oS4	46737000	Push SW., INPUT SELECTOR

3-8. F-4279 DISC INPUT Terminal Board

Component Side

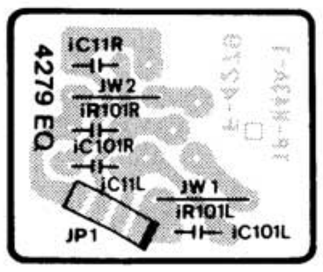

Parts List

Parts No.	Stock No.	Description
	46736500	2P Terminal Board, MM/MC

3-9. F-4280 DISC/REC Indicator LED Board

Component Side

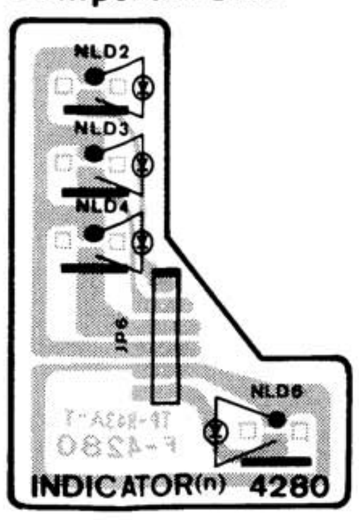

Parts List

Parts No.	Stock No.	Description
•LED		
nLD2	07246200	SEL1710K, MM
nLD3	07246200	SEL1710K, MC
nLD4	07246200	SEL1710K, DA
nLD6	03193700	SEL1110S, REC OUT

3-10. F-4281 Control Amp. Circuit Board

(Stock No. 00766601)

Component Side

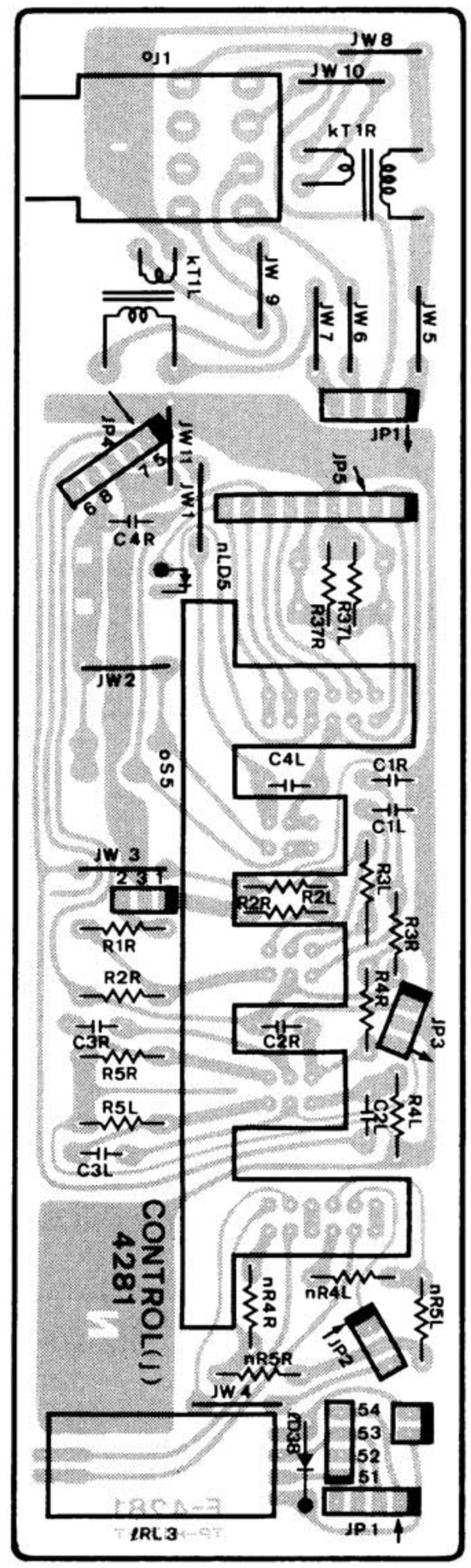

Parts List

Parts No.	Stock No.	Description
•FET		
jFT1	07110000	μPA68H-L
	or 07110001	μPA68H-M
•IC		
jIC1	46579100	M5219L
kT1	46841800	OUTPUT Transformer, PHONES
•Diode		
ID38	03117600	1S2473T77
	or 46086000	1S1588TP-3
⚠ kR82	46228400	33Ω 1/2W N.I.R.
IRL3	11504300	Relay
	or 11504301	Relay (LA2A-24B)
•LED		
nLD5	03193700	SEL1110S, FINE TONE CONTROLLER
oS5	46736900	Push SW., TONE, FILTERS, LOUDNESS, METER RANGE
oJ1	46078200	Jack, PHONES

3-11. F-4283 Graphic EQ. Volume Circuit Board

(Stock No. 00766801)

Component Side

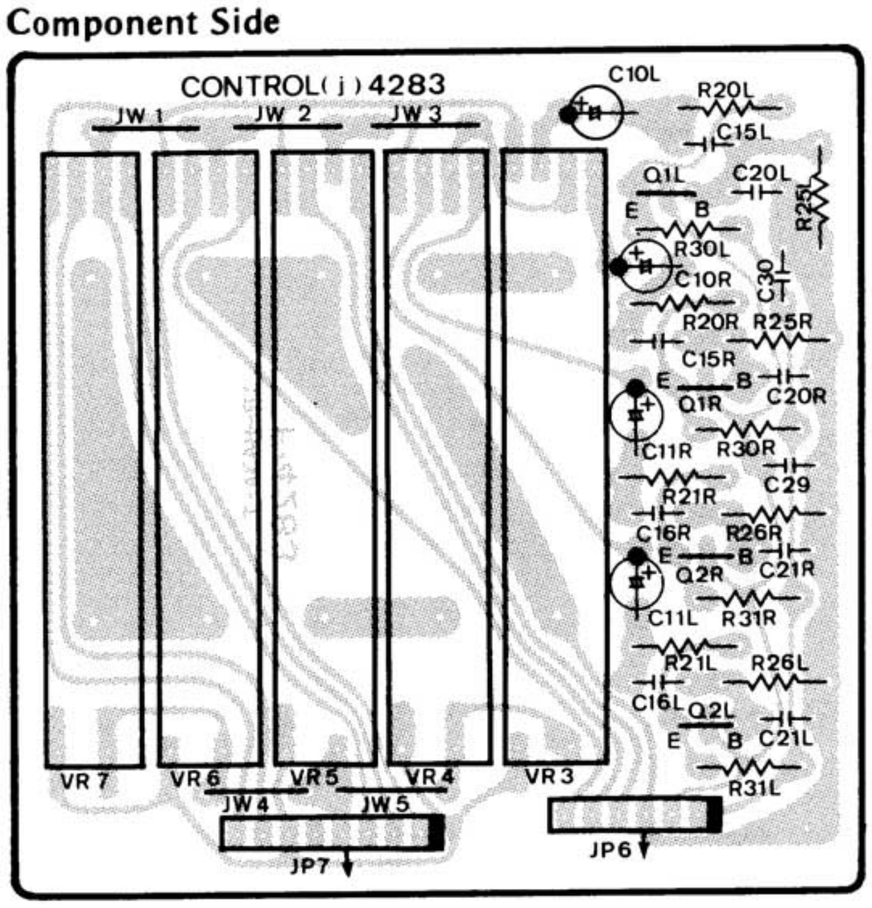

Parts List

Parts No.	Stock No.	Description
jVR3	46736700	50KΩ Slide V.R., SUPER BASS
jVR4	46736700	50KΩ Slide V.R., BASS
jVR5	46736700	50KΩ Slide V.R., MID.
jVR6	46736700	50KΩ Slide V.R., MID. HIGH
jVR7	46736700	50KΩ Slide V.R., TREBLE

3-12. F-4284 Graphic EQ. Circuit Board

(Stock No. 00766901)

Component Side

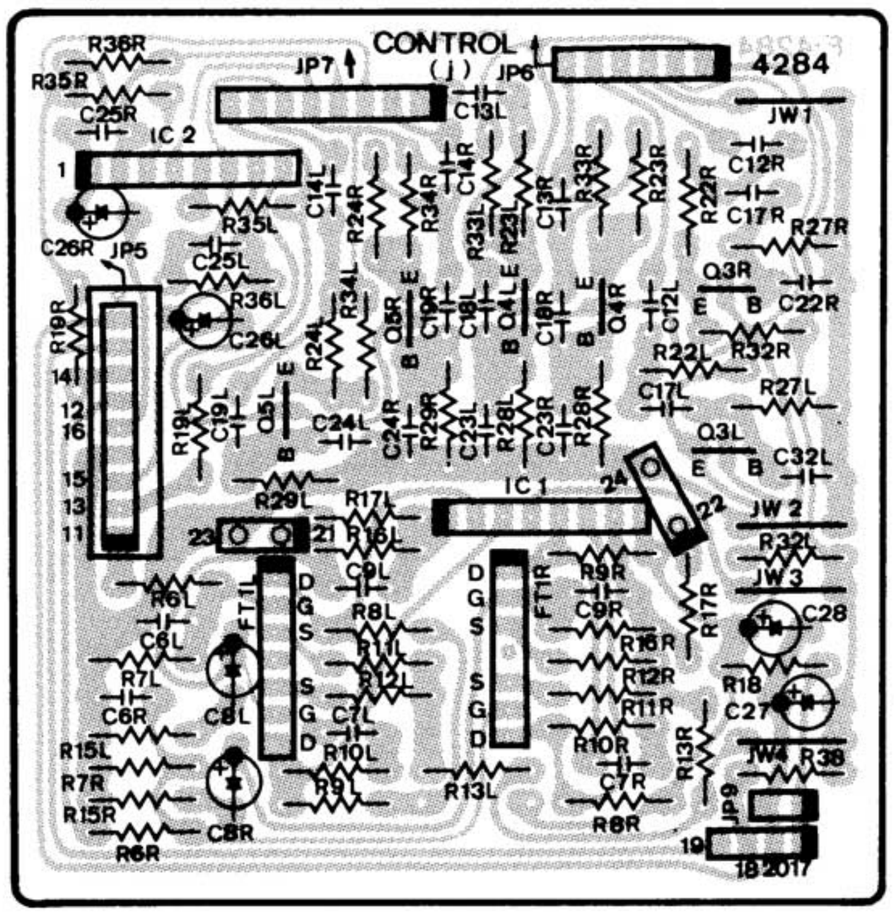

Parts List

Parts No.	Stock No.	Description
•Transistor		
jQ1	46367101	2SC2603
jQ2	46367101	2SC2603
jQ3	46367101	2SC2603
jQ4	46367101	2SC2603
jQ5	46367101	2SC2603
•IC		
jIC2	46078900	M5218L
⚠ jR18	46228600	47Ω 1/2W N.I.R.
⚠ jR38	46228600	47Ω 1/2W N.I.R.

3-13. F-4282 Volume Circuit Board

Component Side

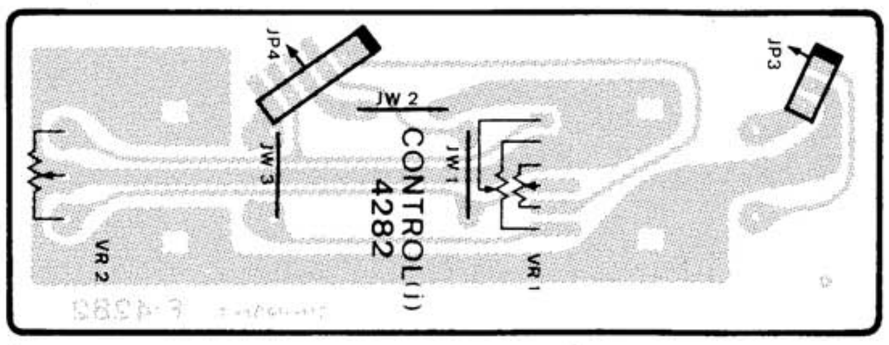

Parts List

Parts No.	Stock No.	Description
jVR1	46730800	150KΩ(B) V.R., VOLUME
jVR2	46730900	250KΩ V.R., BALANCE

3-14. F-4285 Peak Power Meter Circuit Board

Component Side (Stock No. 00767001)

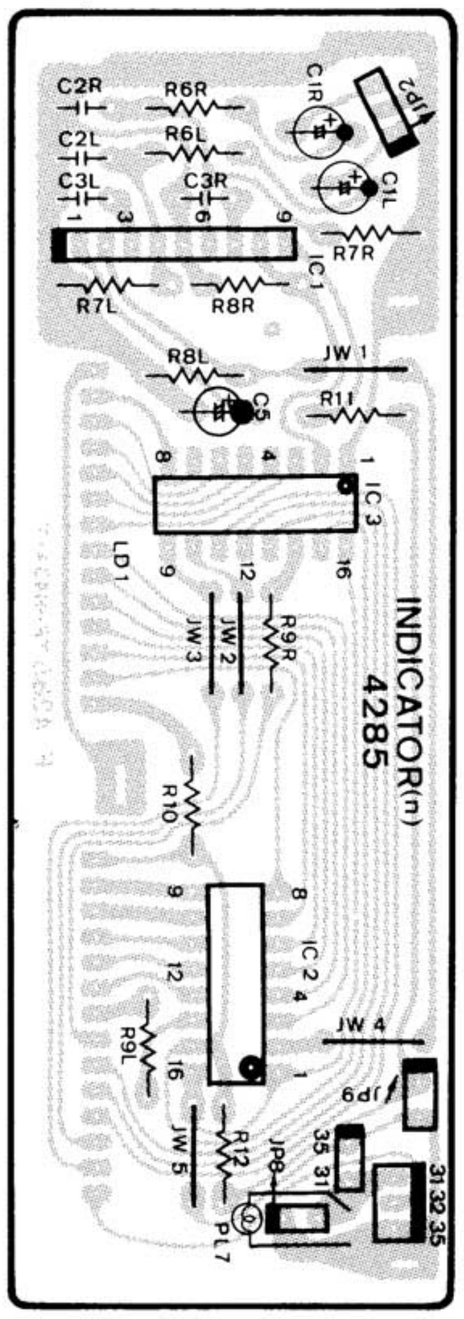

Parts List

Parts No.	Stock No.	Description
nIC1	03610000	TA7318P
nIC2	46254700	HA12010
nIC3	46254700	HA12010
nLD1	46705300	FL. Display Tube FG24SL6GR, PEAK POWER METER
⚠ nR11	08924200	1.2kΩ 1/2W N.I.R.
⚠ nR12	00183200	470Ω 1W N.I.R.
⚠ nR15	00180100	15Ω 1W N.I.R.
⚠ nR16	00180100	15Ω 1W N.I.R.

3-15. F-4286 Power Indicator Board

Component Side

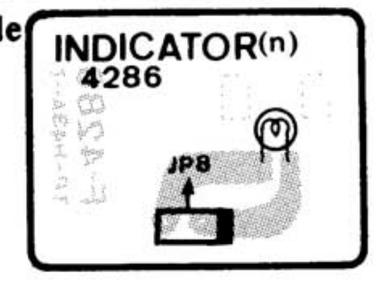

Parts List

Parts No.	Stock No.	Description
nPL6	46834500	Pilot Lamp 8V 0.1A

3-16. F-4288 SPEAKERS SW. Board

Component Side

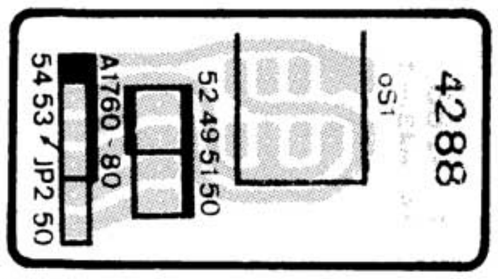

Parts List

Parts No.	Stock No.	Description
oS6	46730700	Rotary SW., SPEAKERS

3-17. F-4289 Protector Indicator Board

Component Side

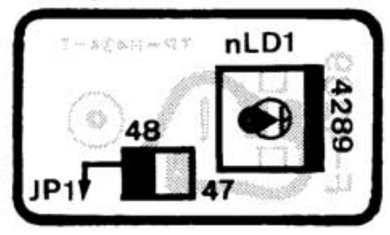

Parts List

Parts No.	Stock No.	Description
nLD7	03193700	LED, SEL1110S

3-18. F-4287 Protector Relay Circuit Board

Component Side

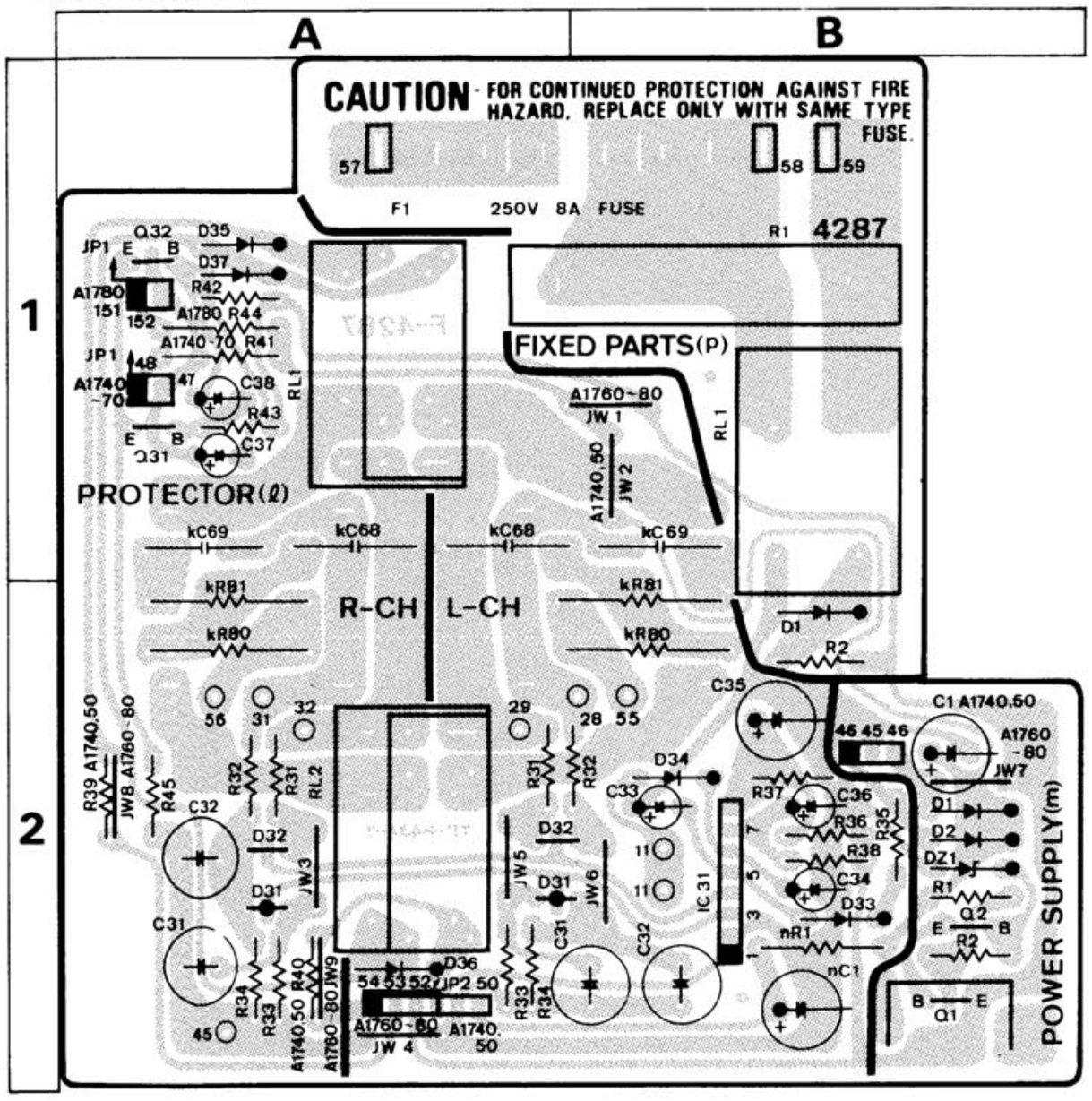

Parts List

Parts No.	Stock No.	Description
⚠ kR80	00185500	10Ω 2W N.I.R.
⚠ kR81	00185500	10Ω 2W N.I.R.
•Transistor		
IQ31	07194801	2SC1815
IQ32	07194801	2SC1815
•IC		
IIC31	03609000	HA12002
•Diode		
ID31	46463900	MC921
ID32	46463700	MC911
ID33	03117700	10E-2
ID34	03111800	1S1588
	or 07176400	1S2473HS
ID35	03117700	10E-2
ID36	03117700	10E-2
ID37	03111800	1S1588
	or 07176400	1S1473HS
IC31	00303400	100μF 10V E.B.
IC32	00303400	100μF 10V E.B.
⚠ IR44	00180800	1.8kΩ 1W N.I.R.
IRL1	46737700	Relay
IRL2	46737700	Relay
	07203600	8P Terminal Board, SPEAKERS

3-19. F-4293 Power Supply Circuit Board

Component Side

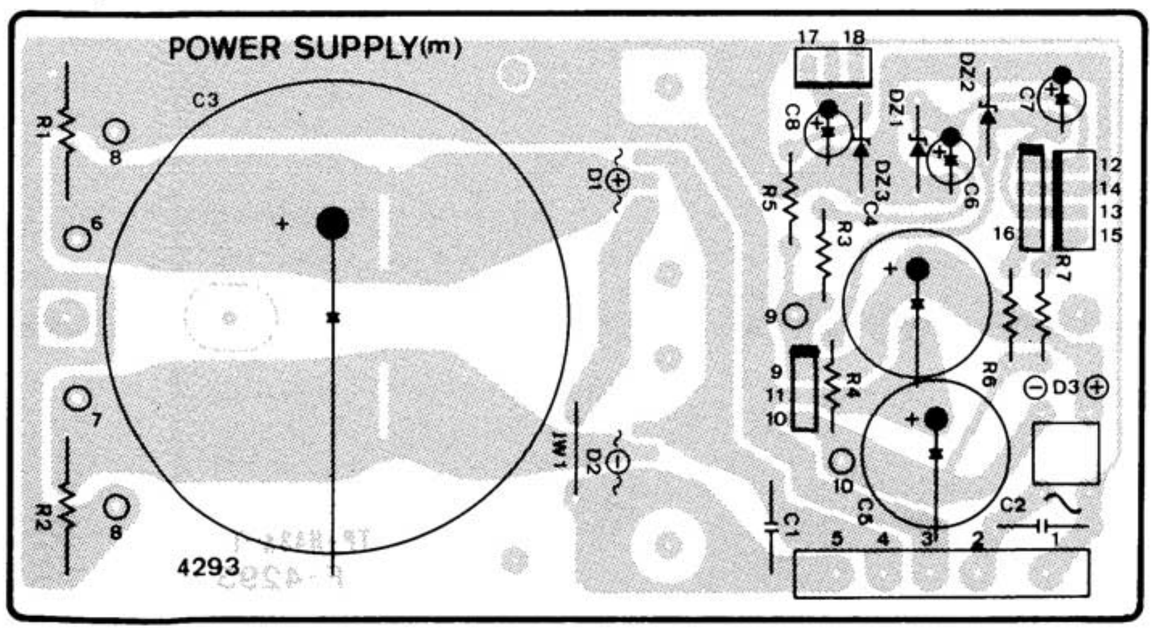

Parts List

Parts No.	Stock No.	Description
•Diode		
mD1	46731500	CTP21S
mD2	46731400	CTR21R
mD3	46273600	DBB10-B
•Zener Diode		
mDZ1	03179400	RD16E-B
mDZ2	03179400	RD16E-B
mDZ3	03180200	RD24E-B
mC1	08680400	0.01μF 500V C.C.
mC2	08680400	0.01μF 500V C.C.
mC3	46729400	22000μF 71V E.L.
⚠ mR1	00184500	6.8kΩ 1W N.I.R.
⚠ mR2	00184500	6.8kΩ 1W N.I.R.
⚠ mR3	08923900	680Ω 1/2W N.I.R.
⚠ mR4	08923900	680Ω 1/2W N.I.R.
⚠ mR5	00132000	150Ω 2W N.I.R.
⚠ mR6	08924100	1kΩ 1/2W N.I.R.
⚠ mR7	08924700	3.3kΩ 1/2W N.I.R.

3-19. F-4294 Power SW. Circuit Board

Component Side

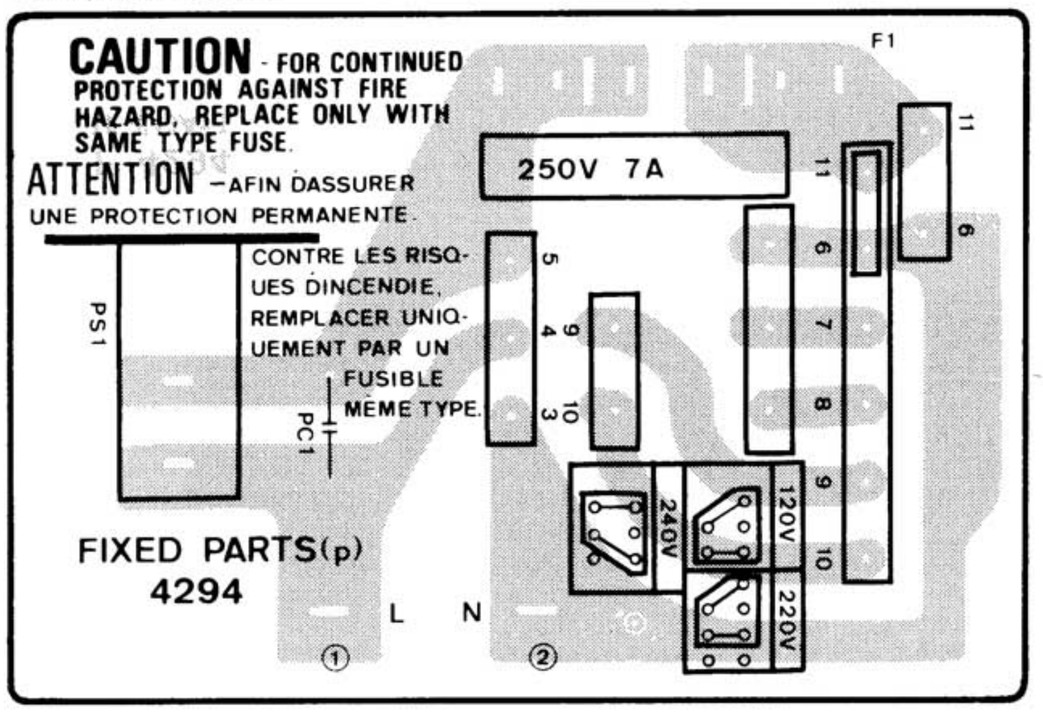

Parts List

Parts No.	Stock No.	Description
⚠ pC1	46425800	0.01μF 400V C.C.
⚠ pF1	07189000	Fuse 4.0A 250V (220/240V) (XX)
⚠	07189400	Fuse 8.0A 250V (120V) (XX,UL,CSA)
⚠	07185200	Fuse 3.15A 250V (EU)
⚠ pS1	46546900	Push SW., POWER (XX,UL,CSA)
⚠	or 46364300	Push SW., POWER (EU)

3-20. F-4295 Power Amp. Circuit Board (Stock No. 00767801)

Component Side

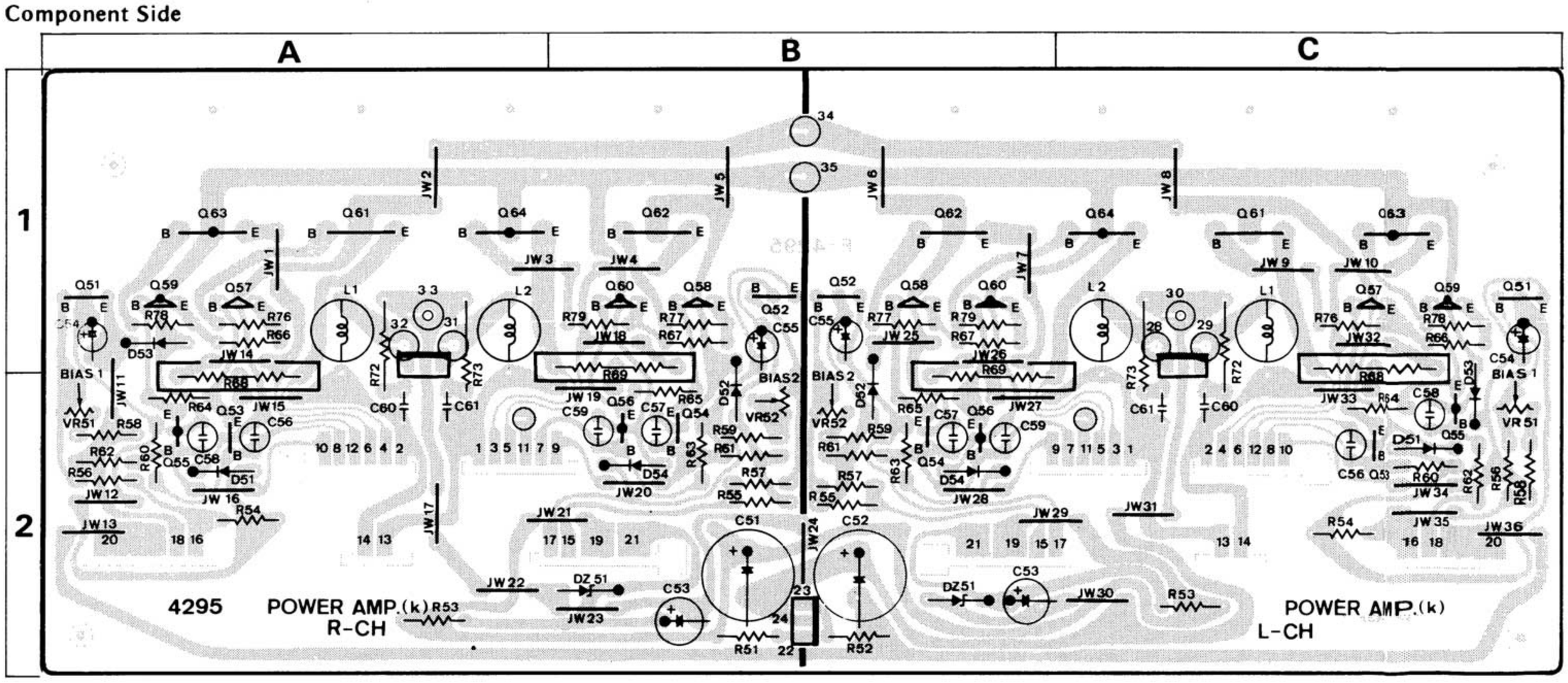

Parts List

Parts No.	Stock No.	Description
•Transistor		
kQ51	03067401	2SC1845
kQ52	03067401	2SC1845
kQ53	46728301	2SC2705
kQ54	46728301	2SC2705
kQ55	46728201	2SA1145
kQ56	46728201	2SA1145
kQ57	46728901	2SC3298
kQ58	46728901	2SC3298
kQ59	46728801	2SA1306
kQ60	46728801	2SA1306
kQ61	46729701	2SC3284
kQ62	46729701	2SC3284
kQ63	46729601	2SA1303
kQ64	46729601	2SA1303
•Diode		
kD51	46727900	1S2091
kD52	46727900	1S2091
kD53	46727900	1S2091
kD54	46727900	1S2091

	Stock No.	Description
•Zener Diode		
kDZ51	03171500	RD22FB
⚠ kR53	46230100	820Ω 1/2W N.I.R.
⚠ kR64	46229800	470Ω 1/2W N.I.R.
⚠ kR65	46229800	470Ω 1/2W N.I.R.
⚠ kR66	46229100	120Ω 1/2W N.I.R.
⚠ kR67	46229100	120Ω 1/2W N.I.R.
⚠ kR68	46644900	0.33Ω×2 5W CeR.
⚠ kR69	46644900	0.33Ω×2 5W CeR.
kL1	46851900	Inductor
kL2	46851900	Inductor
kVR51	46738400	1KΩ S.V.R., Bias adj.
kVR52	46738400	1KΩ S.V.R., Bias adj.

4. OTHER PARTS

4-1. Front View

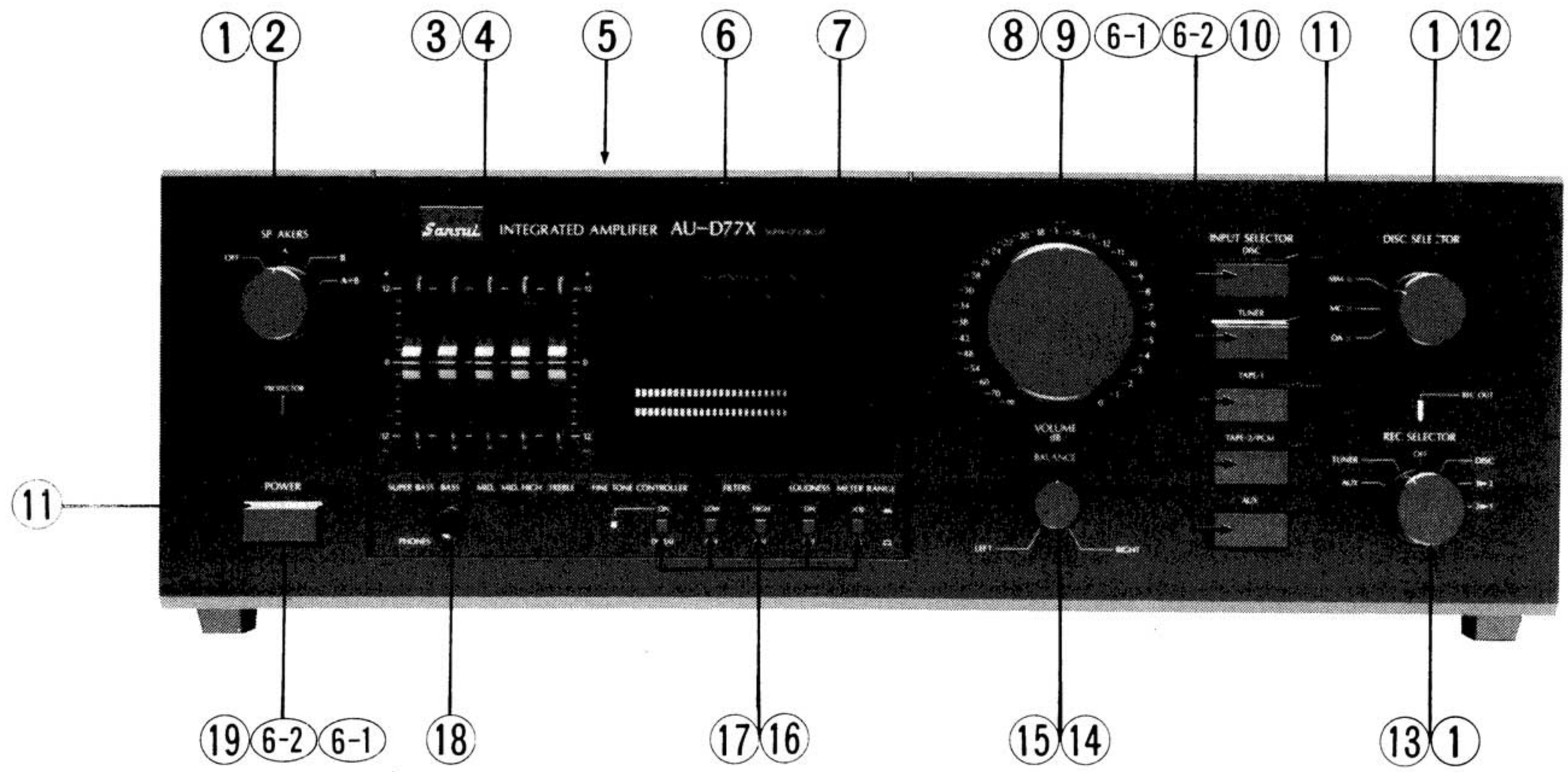

4-2. Top View

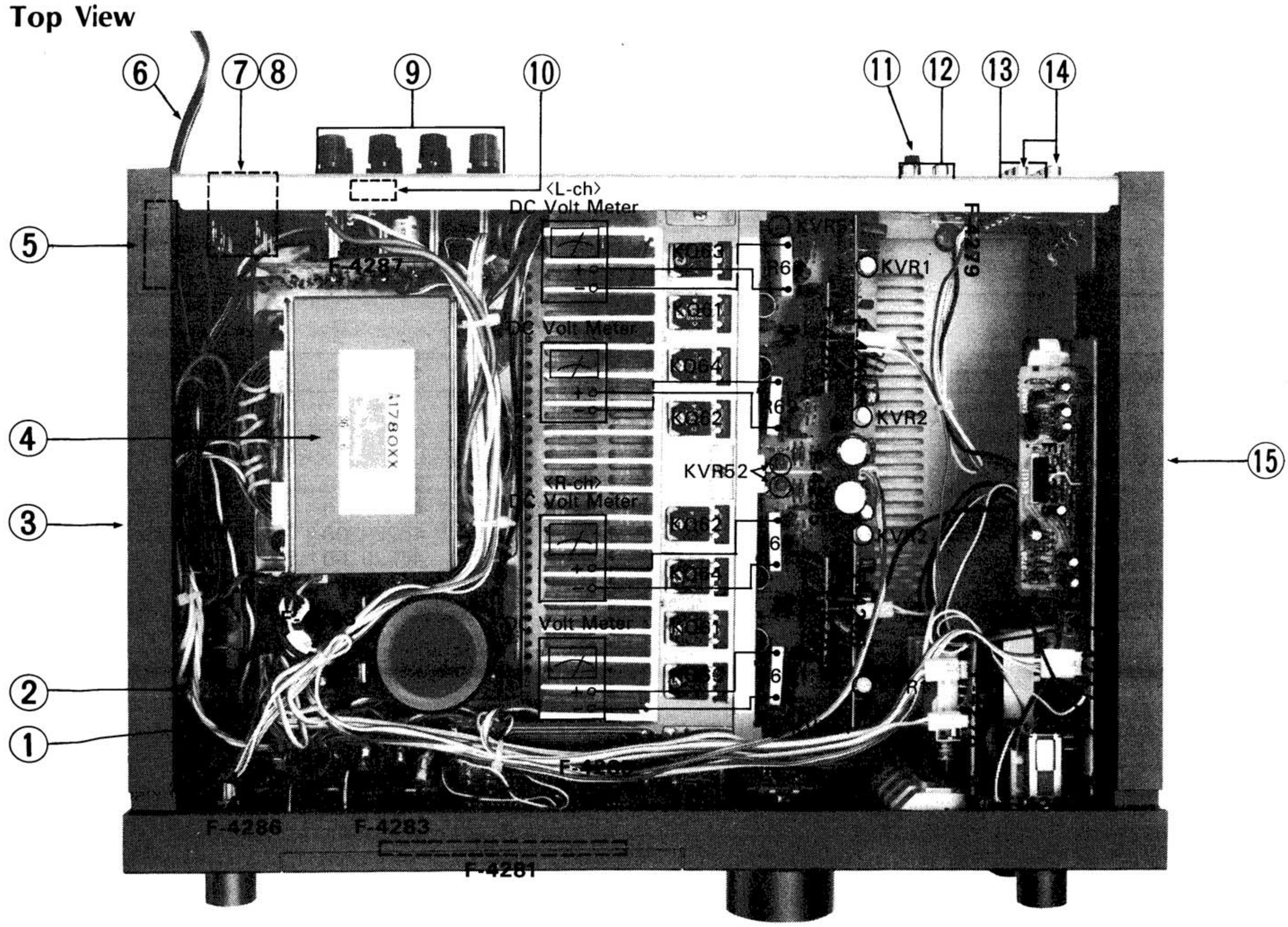

Parts List <Front View>

Parts No.	Stock No.	Description
1	47298100	Knob, SPEAKERS, DISC SELECTOR, REC SELECTOR
2	46730700	Rotary SW., SPEAKERS
3	47348100	Knob, TONE CONTROLLER
4	46736700	Slide VR., TONE CONTROLLER
5	47299800	Bonnet
6	47324300	Front Panel Ass'y
6-1	47324100	Knob, INPUT SELECTOR, POWER
6-2	47046700	Spring, INPUT SELECTOR knob, POWER knob
7	46705300	FL. Display Tube
8	47297900	Knob, VOLUME
9	46730800	150kΩ(B) VR., VOLUME
10	46737000	Push SW., INPUT SELECTOR
11	46730100	Pilot Lamp 8V 0.1A
12	46731700	Rotary SW., DISC SELECTOR
13	46730500	Slide Rotary SW., REC SELECTOR
14	47297700	Knob, BALANCE
15	46730900	250kΩ VR., BALANCE
16	07917300	Knob, FINE TONE CONTROLLER, FILTERS, LOUDNESS, METER RANGE
17	46736900	Push SW., FINE TONE CONTROLLER, FILTERS, LOUDNESS, METER RANGE
18	46078200	Jack, PHONES
⚠ 19	46546900	Push SW., POWER (XX,UL,CSA)
⚠	46364300	Push SW., POWER (EU)

Parts List <Top View>

Parts No.	Stock No.	Description
1	47311300	Joint Shaft
⚠ 2	07189400	Fuse 8A 250V (120V) (XX,UL,CSA)
⚠	07189000	Fuse 4A 250V (220/240V) (XX)
⚠	07185200	Fuse 3.15A 250V (EU)
3	47286000	Side Panel L
⚠ 4	15014101	Power Transformer (XX)
⚠	15014102	Power Transformer (UL,CSA)
⚠	15014105	Power Transformer (EU)
5	47157300	AC Cord Cover
⚠ 6	38004700	Power Supply Cord (XX, UL)
⚠	46321000	Power Supply Cord (CSA)
⚠	46128900	Power Supply Cord (EU)
⚠ 7	46730400	AC OUTLET (XX,UL,CSA)
⚠	46161000	AC OUTLET (EU)
⚠ 8	07204700	Slide SW., voltage Selector (EU)
9	07203600	8P Terminal Board, SPEAKERS
⚠ 10	46739400	Slide SW., SPEAKER IMPEDANCE (XX,EU)
⚠	46736600	Slide SW., SPEAKER IMPEDANCE (UL,CSA)
11	22301510	GND Terminal
12	46736500	2P INPUT Terminal DISC, MM/MC
13	46363900	6P Terminal, TUNER, TAPE-1, TAPE-2, AUX
14	46438100	2P INPUT Terminal DISC, DA
15	47286100	Side Panel R

5. INTERIOR BLOCK DIAGRAM OF IC

•M5218L, M5219L (Audio Pre Amp. IC)

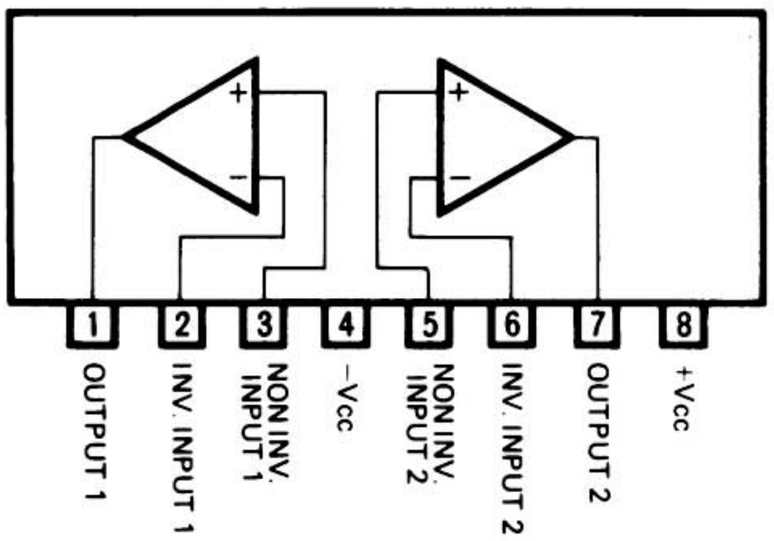

•HA12010 (FL Display Tube Drive)

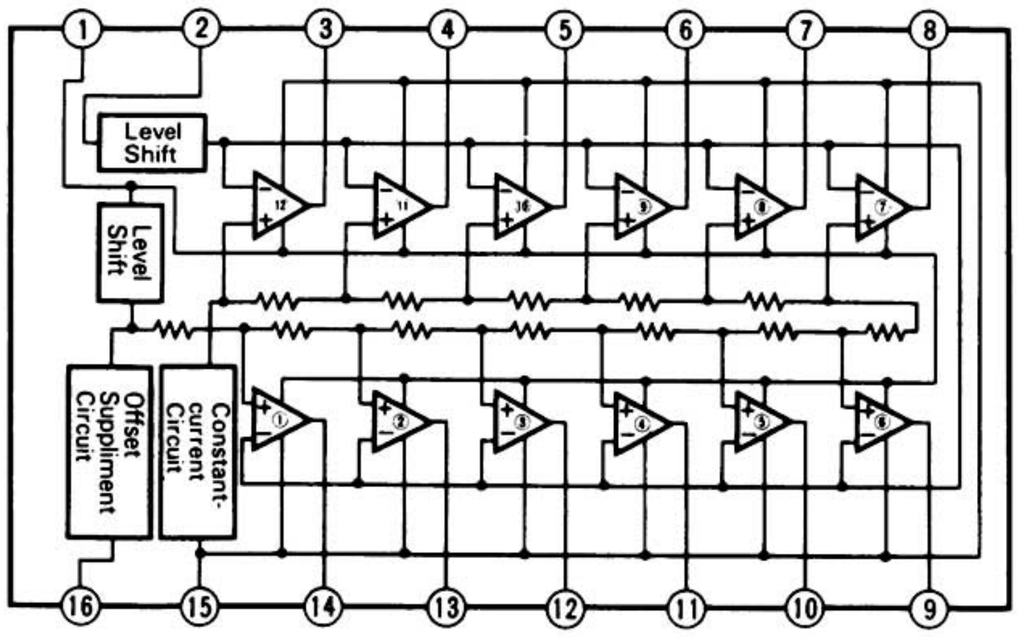

•TA7318P (Meter Drive IC)

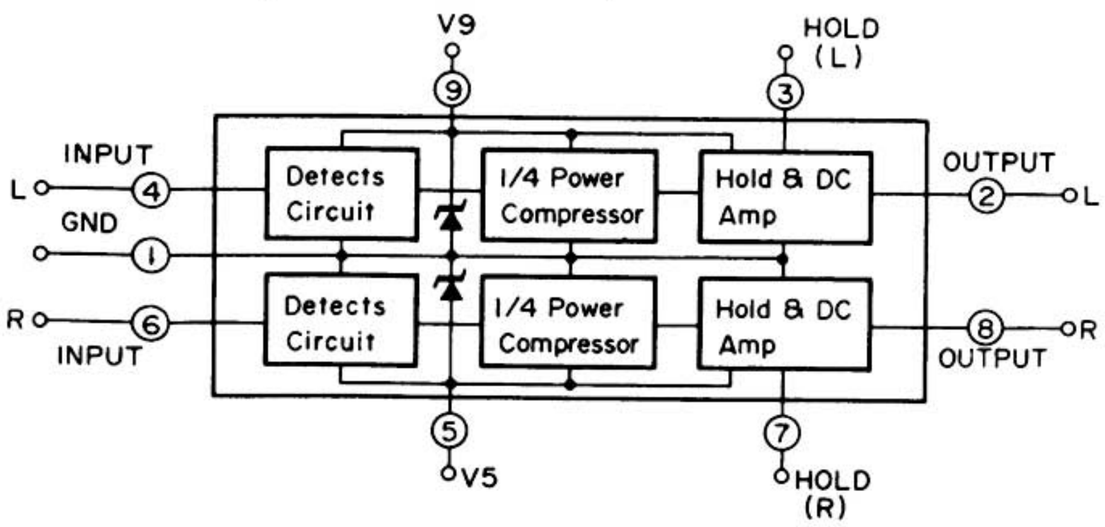

•HA12002 (Protector IC)

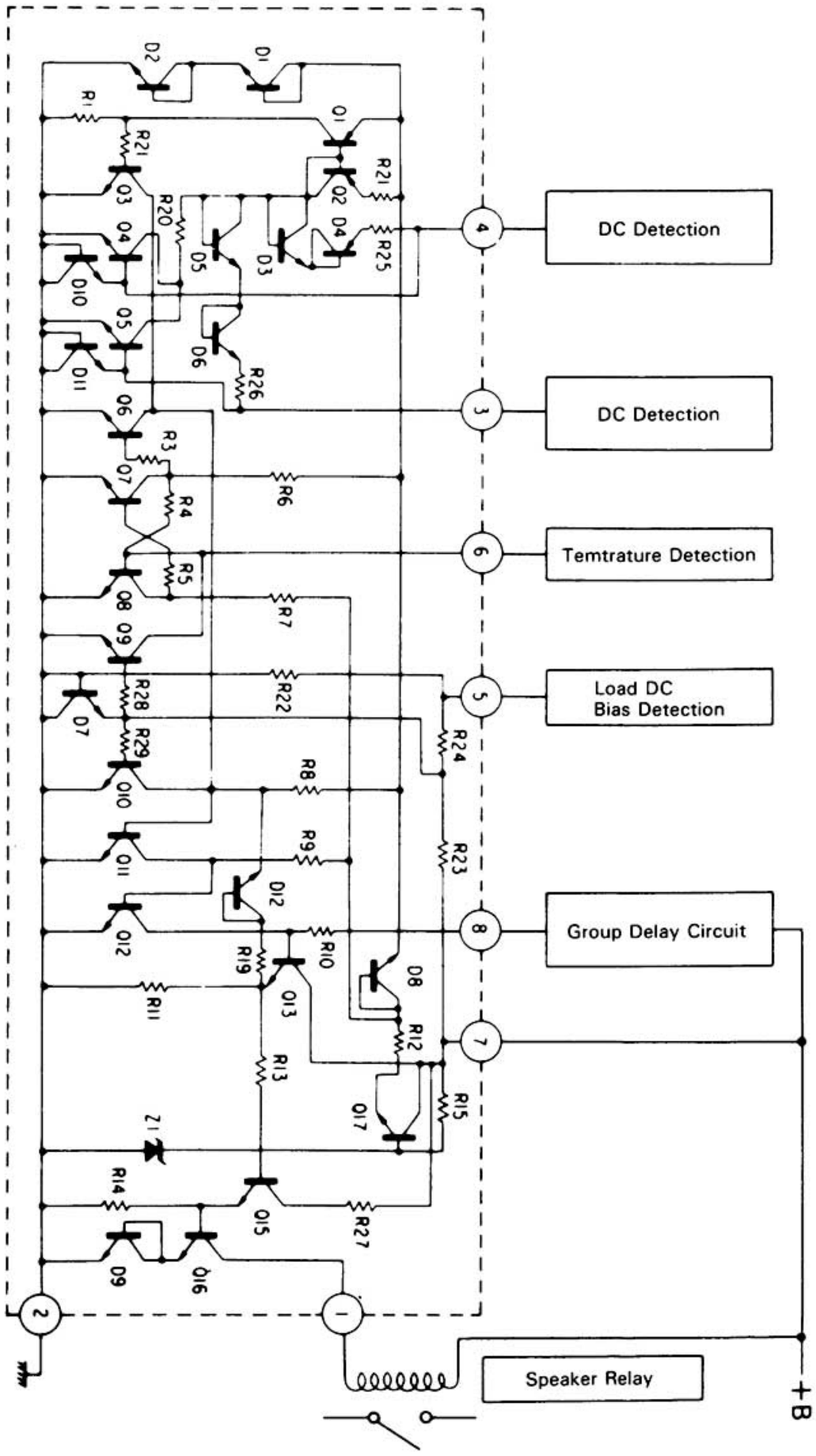

6. SCHEMATIC DIAGRAM 6-1. Amplifier Section

*Design and specifications subject to change without noitce for improvement.
*La présention et les spécifications sont susceptibles d'être modifiées sans préavis par suites d'améliorations éventuelles.
*Anderungen, die dem technischen Fortschritt dienen, bleiben vorbehalten.

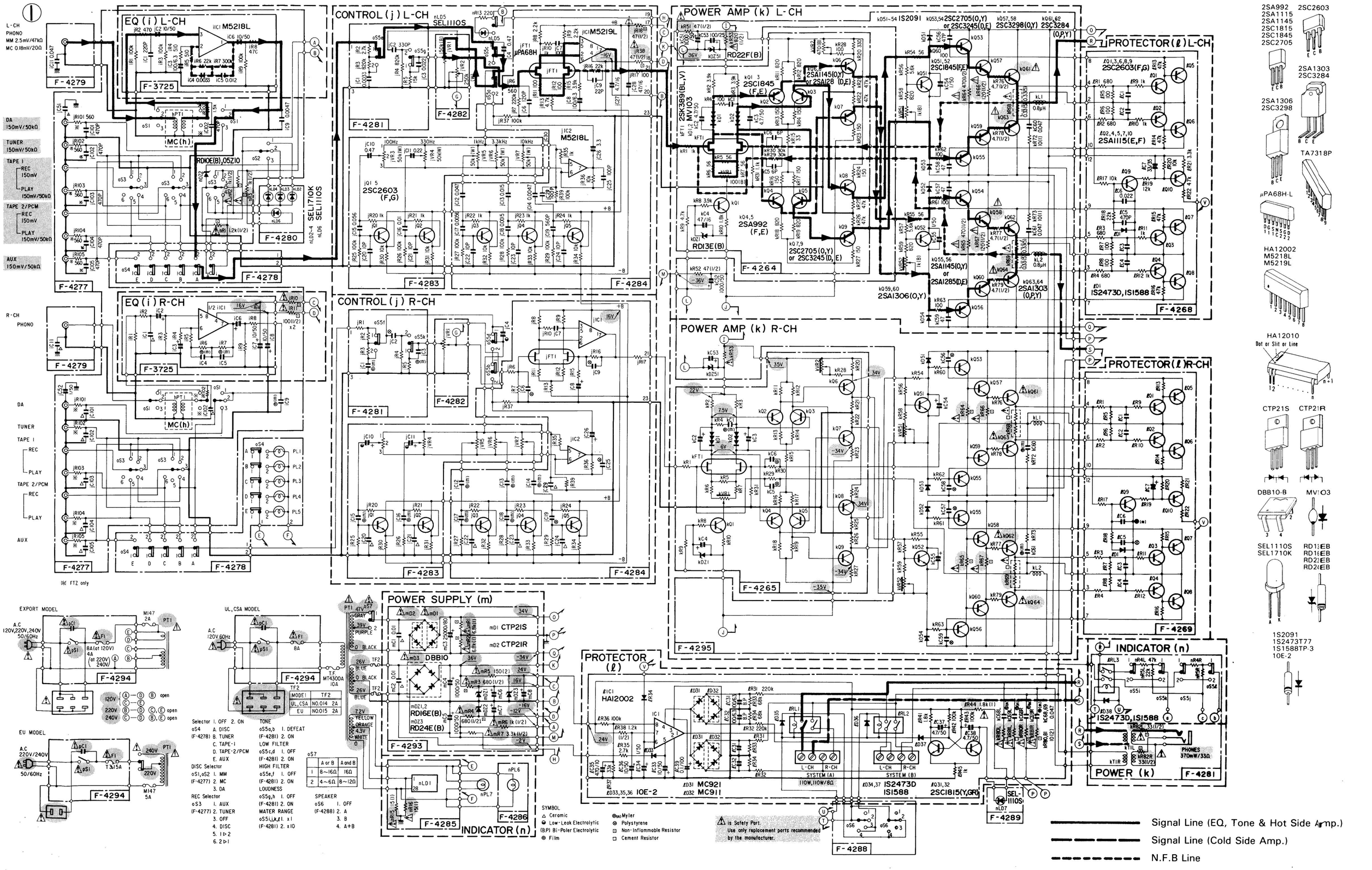

6-2. Peak Power Meter Section

*Design and specifications subject to change without noitce for improvement.
*La présention et les spécifications sont susceptibles d'être modifiées sans préavis par suites d'améliorations éventuelles.
*Anderungen, die dem technischen Fortschritt dienen, bleiben vorbehalten.

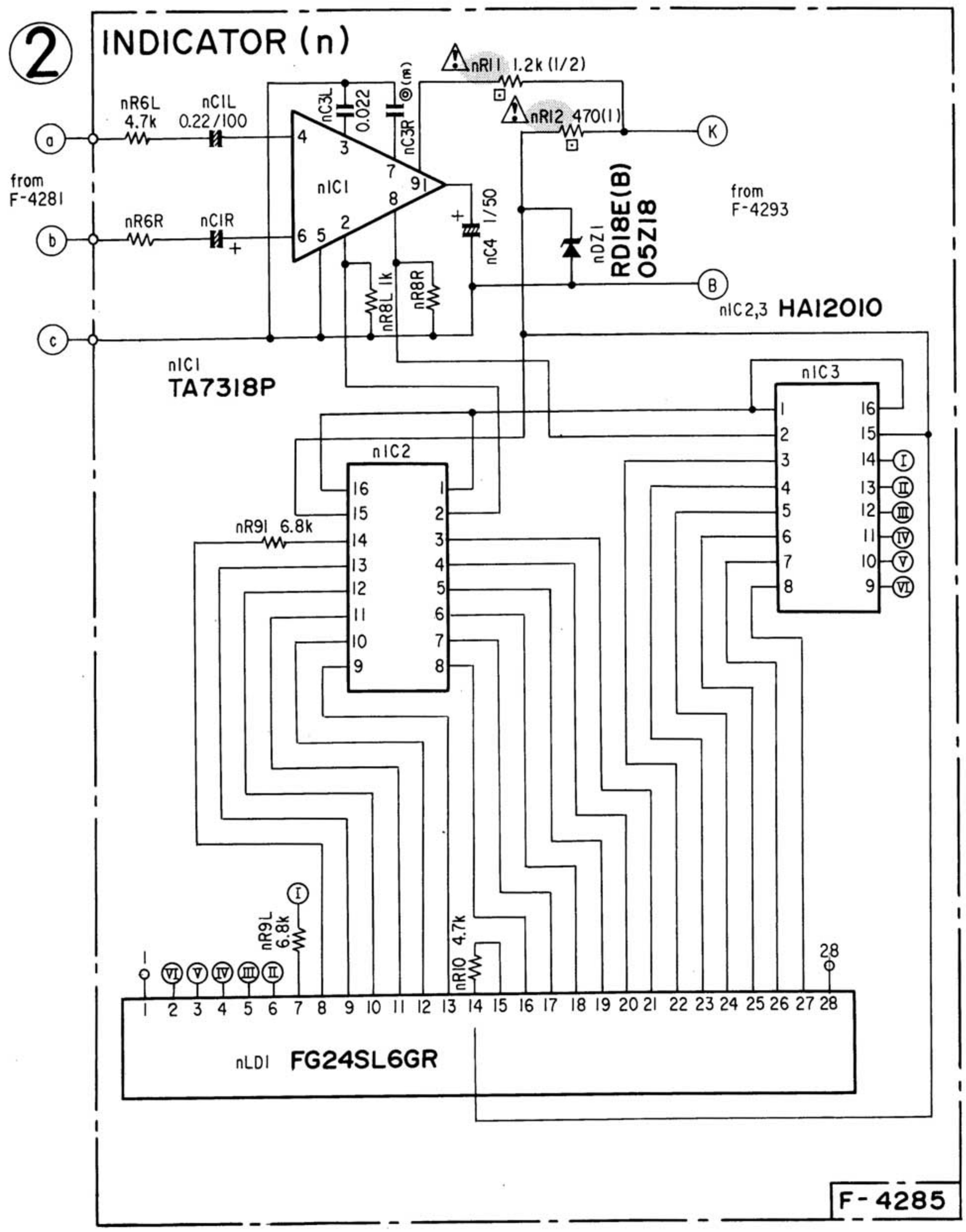

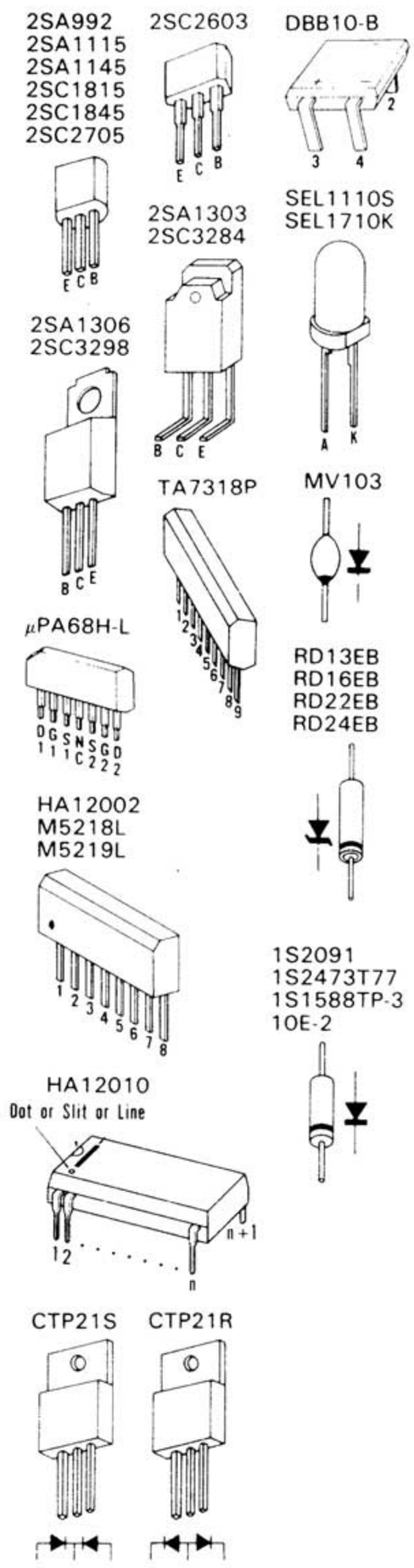

7. PACKING LIST

Parts No.	Stock No.	Description
1	47299000	Vinyl Bag
2	47287600	Styrofoam Packing
3	47299200	Carton Case

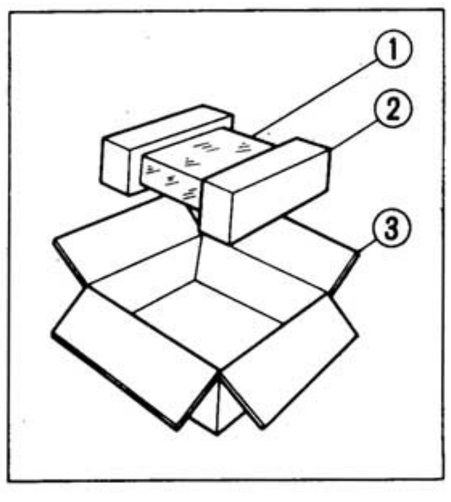

8. ACCESSORY LIST

Stock No.	Description
46729100	Operating Instruction