SANSUI BA-60, 90 SPECIFICATIONS

DC BIAS CURRENT	18mA		
CONTINUOUS POWER	8Ω	16W	11.4V
GAIN AND INPUT LEVEL			
		GAIN	**INPUT**
	AUX	25±3dB	0.7V

DC BIAS CURRENT	30mA		
CONTINUOUS POWER	8Ω	28W	15.0V
GAIN AND INPUT LEVEL			
		GAIN	**INPUT**
	INPUT	23.5±3dB	1V

MEMO

www.hifiengine.com

SANSUI BA-60, 90 SCHEMATIC DIAGRAM

Sansui

BA-60

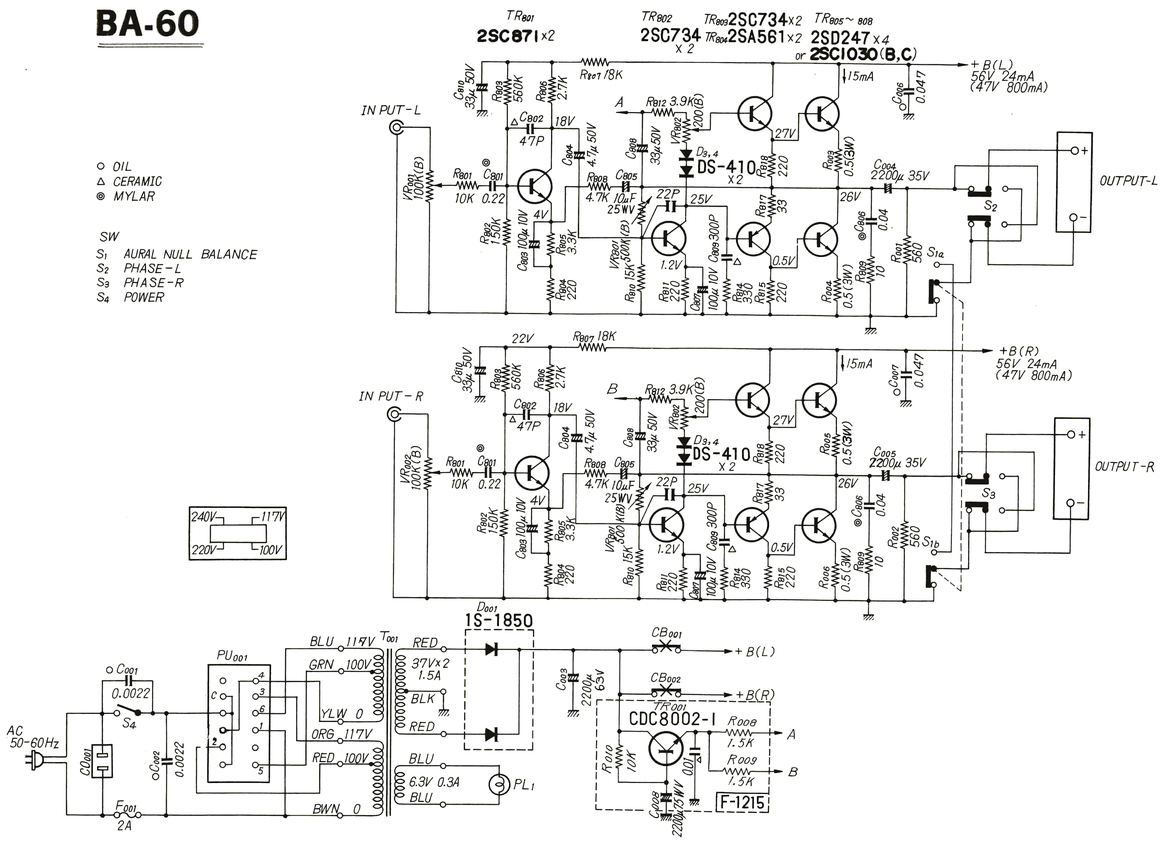

BA-90

TRANSISTORS

TR801	2SC871 or 2SC458LG
TR802	2SC871 or 2SC458LG
TR803	2N4250
TR804	2N4250
TR805	2SC734 O or Y
TR806	2SC734 O or Y
TR807	2SC826
TR808	2SC826
TR809	2SC708 A
TR810	2SC708 A
TR811	2SA537 A
TR812	2SA537 A
TR813	2SC889
TR814	2SC889
TR815	2SC889
TR816	2SC889
TR001	CDC8002-I

SWITCHES

S801a~b DAMPING FACTOR
1 HIGH
2 LOW

S802a~b AURAL NULL BALANCE
1 NORMAL
2 TEST

S803 PHASE
1 NORMAL
2 REVERSE

S804 PHASE
1 NORMAL
2 REVERSE

S001 POWER
1 ON
2 OFF

VARIABLE RESISTORS

VR801 LEVEL ADJUST
VR802 LEVEL ADJUST
VR803 ALTERNATING CURRENT ADJUST
VR804 ALTERNATING CURRENT ADJUST
VR805 DIRECT CURRENT ADJUST
VR806 DIRECT CURRENT ADJUST
VR901 PROTECTOR LEVEL ADJUST
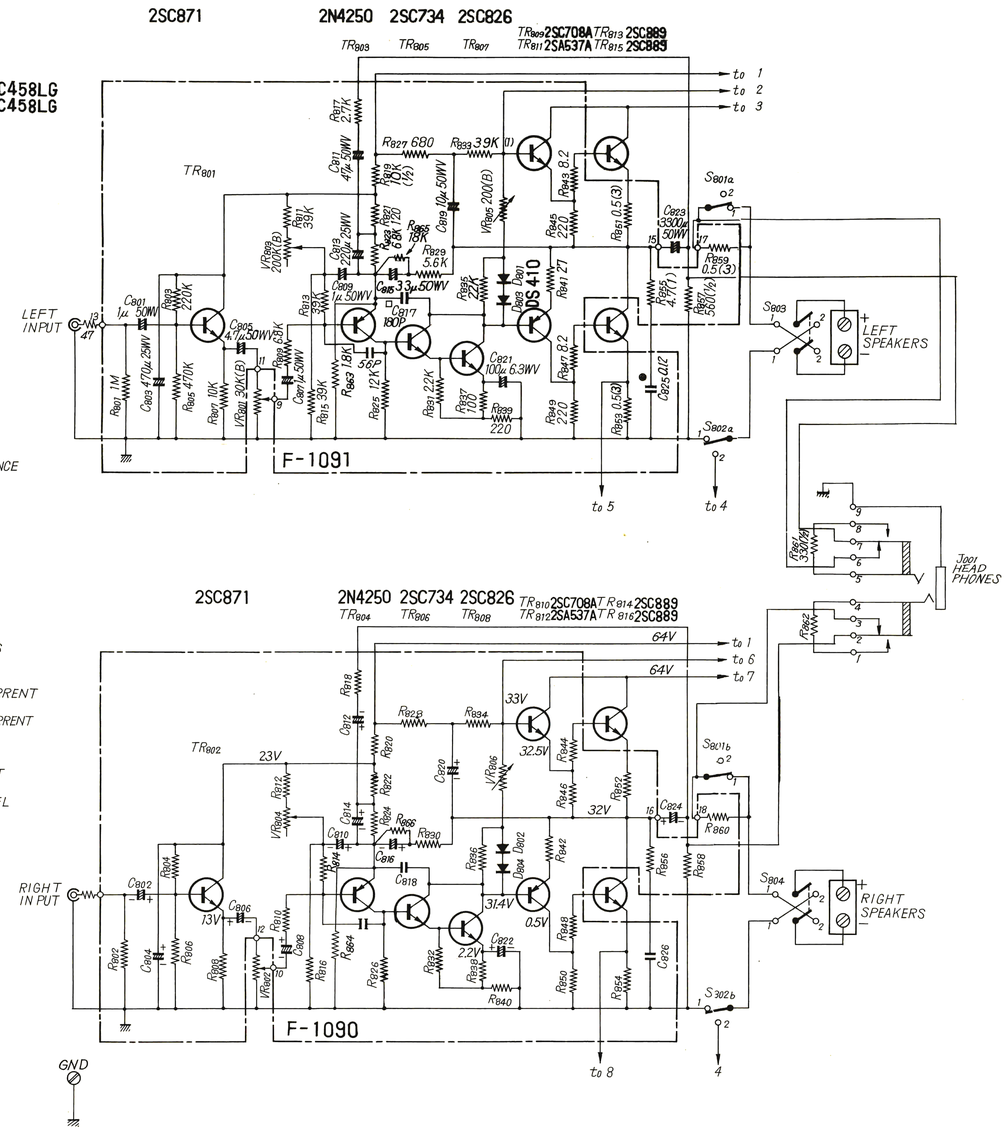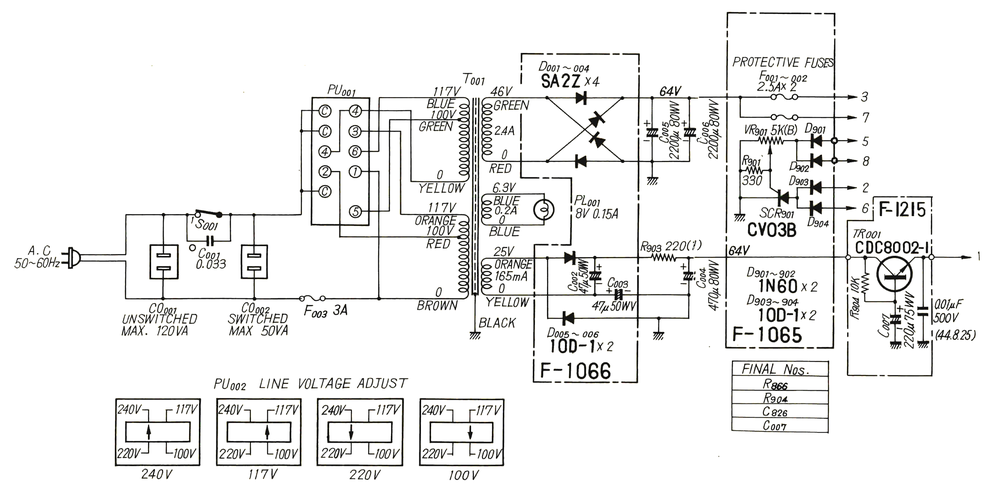
SYMBOL
◎ MYLAR CAPACITORS
□ MICA CAPACITORS
○ OIL CAPACITORS