SERVICE MANUAL

REVERBERATION AMPLIFIER

SANSUI RA-1000

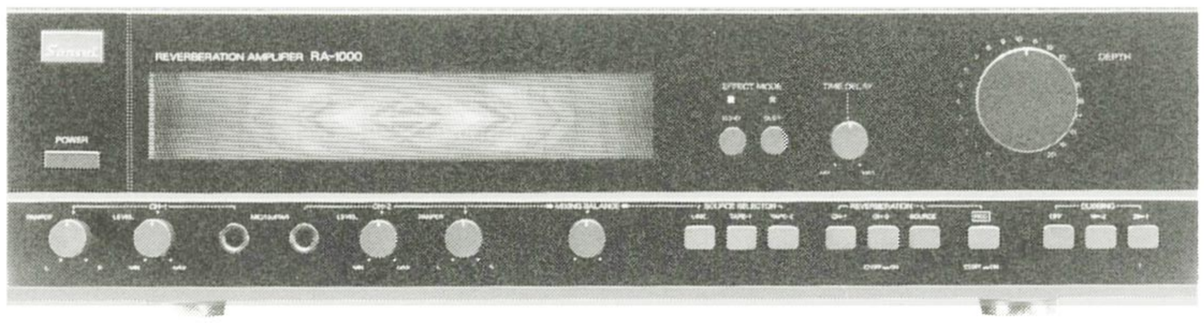

CAUTION

1. Parts identified by the ⚠ symbol on the schematic diagram and the parts list are critical for safety. Use only replacement parts that have critical characteristics recommended by the manufacturer.
2. Make leakage-current or resistance measurements to determine that exposed parts are acceptably insulated from the supply circuit before returning the appliance to the customer.

Sansui

SANSUI ELECTRIC CO., LTD.

•SPECIFICATIONS

Rated output voltage (reverberation off)
TAPE REC ..... 150 mV/600 ohms
OUTPUT ..... 150 mV/4.7 kohms
Maximum output voltage
(at 0.05% total harmonic distortion)
..... 8V
Input sensitivity and impedance (at 1 kHz)
MIC/GUITAR ..... 0.5 mV/10 kohms
INPUT/TAPE PLAY ..... 150 mV/47 kohms
Total harmonic distortion
(20 to 20 kHz, at 2V, reverberation off)
..... less than 0.025%
Frequency response (at 1V, reverberation off)
INPUT/TAPE PLAY ..... 10 Hz to 80,000 Hz, +0 dB, −3.0 dB
MIC/GUITAR ..... 100 Hz to 10,000 Hz, +0 dB, −3.0 dB
Signal to noise ratio (at 3V, A-network, short-circuit)
MIC/GUITAR ..... more than 80 dB
INPUT ..... more than 95 dB
Reverberation time
ECHO ..... 0 to 4.5 sec (−60 dB)
DUET ..... 30 to 200 msec
Power requirements
Power voltage ..... 120/220/240V (50/60 Hz)
For U.S.A. and Canada
..... 120V (60Hz)
Power consumption 15W
Dimensions ..... 430 mm (16-15/16") W
112 mm (4-7/16") H
265 mm (10-7/16") D
Weight ..... 3.8 kg (8.4 lbs.) net
4.7 kg (10.4 lbs.) packed

* Design and specifications subject to changes without notice for improvements.
* Due to local laws and regulations, this unit sold in some areas are not equipped with variable voltage selectors.

www.hifiengine.com

CAUTION

1. The symbols, UL, CSA, SA, BS, UK, EU, AS and XX on the parts list and the schematic diagram mean followings respectively.

   UL..... Manufactured for U.S.A market.
   (Underwriters Laboratories approved model.)
   CSA..... Manufactured for Canadian market.
   SA..... Manufactured for South African market.
   BS, UK ..... Manufactured for United Kingdom market.
   EU ..... Manufactured for European market.
   AS..... Manufactured for Australian market.
   XX..... Standard Version.
   NON MARK ..... Common Parts.

2. Some printed circuit boards are not supplied as the assembled. To separate these in this service manual, the stock No's are not indicated at the ends of the board names. However, the individual parts on the circuit boards are provided by orders.

3. Since some of capacitors and resistors are omitted from parts lists in this service manual, refer to the Common Parts List for capacitors & resistors, which was issued on February 1983.

4. Abbreviations in this service manual are as follows.

•Abbreviations List

C.R.	: Carbon Resistor	E.B.L.	: Low Leak Bi-Polar Electrolytic Capacitor
S.R.	: Solid Resistor	Ta.C.	: Tantalum Capacitor
Ce.R.	: Cement Resistor	F.C.	: Film Capacitor
M.R.	: Metal Film Resistor	M.P.	: Metalized Paper Capacitor
F.R.	: Fusing Resistor	P.C.	: Polystyrene Capacitor
N.I.R.	: Non-Inflammable Resistor	G.C.	: Gimmic Capacitor
A.R.	: Array Resistor	A.C.	: Array Capacitor
C.C.	: Ceramic Capacitor	V.R.	: Variable Resistor
C.T.	: Ceramic Capacitor, Temperature Compensation	S.V.R.	: Semi Variable Resistor
E.C.	: Electrolytic Capacitor	SW.	: Switch
E.L.	: Low Leak Electrolytic Capacitor	Chip R.	: Chip Resistor
E.B.	: Bi-Polar Electrolytic Capacitor	Chip C.	: Chip Capacitor

www.hifiengine.com

1. BLOCK DIAGRAM

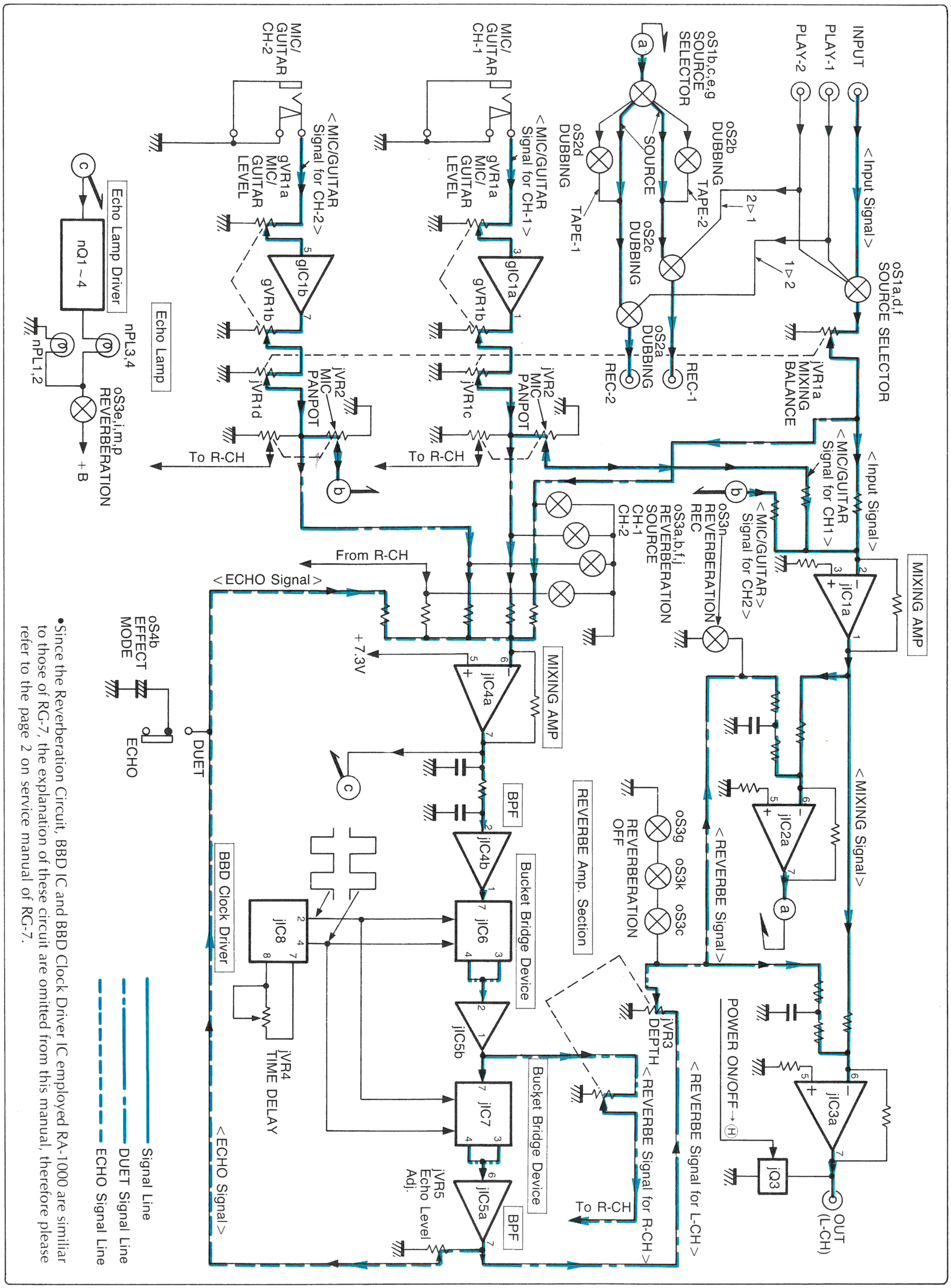

•Since the Reverberation Circuit, BBD IC and BBD Clock Driver IC employed RA-1000 are similiar to those of RG-7, the explanation of these circuit are omitted from this manual, therefore please refer to the page 2 on service manual of RG-7.

2. PARTS LOCATION & PARTS LIST

2-1. F-5451 Reverberation Amp. Board (Stock No. 00978401)

Component Side

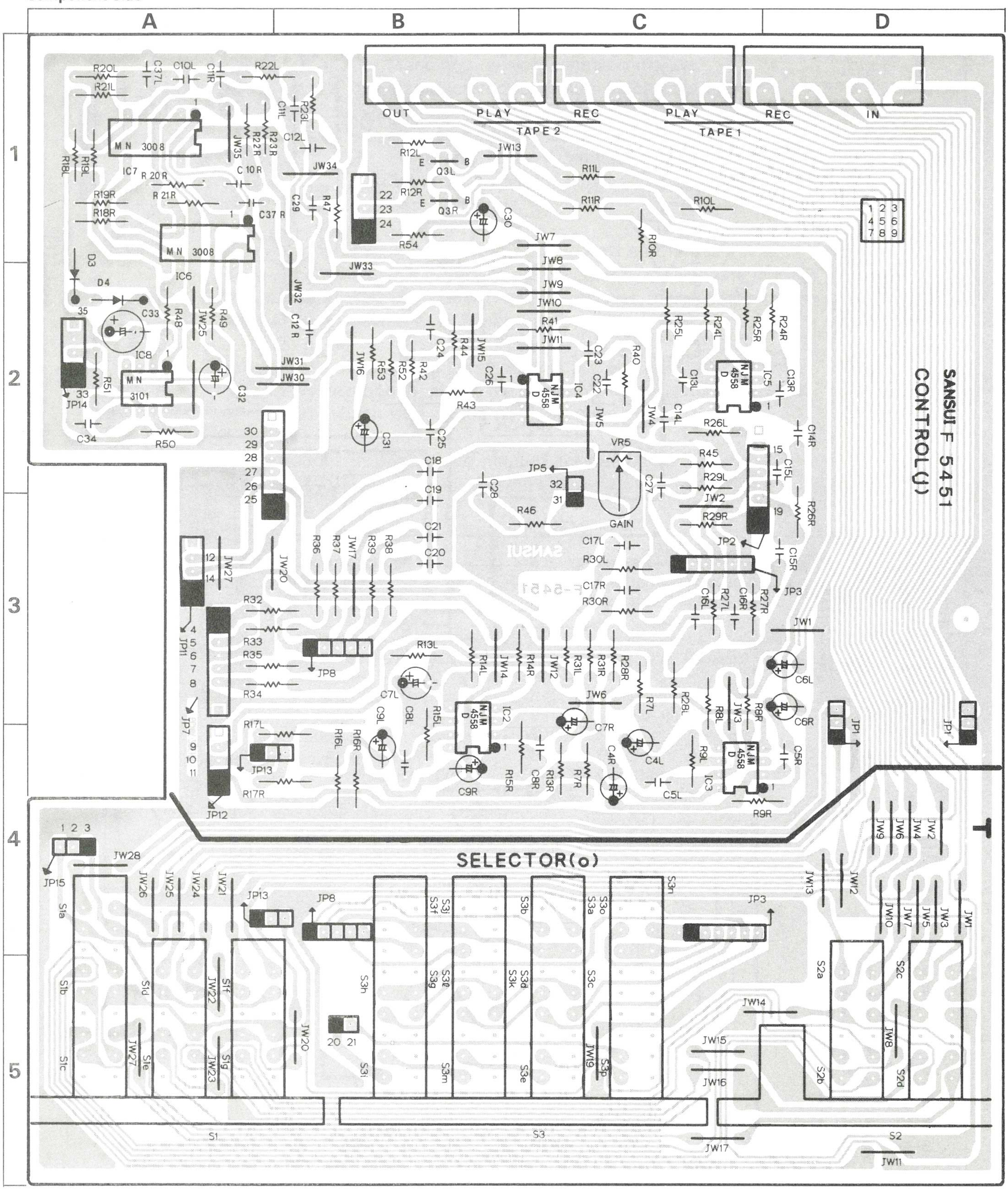

Parts List <F-5451>

Parts No.	Stock No.	Description
•Transistor		
jQ3	46604301	2SC3327
•IC		
jIC2	03607700	NJM4558D
	or 46580100	M5218P
jIC3	03607700	NJM4558D
	or 46580100	M5218P
jIC4	03607700	NJM4558D
	or 46580100	M5218P
jIC5	03607700	NJM4558D
	or 46580100	M5218P
jIC6	48268700	MN3008
jIC7	48268700	MN3008
jIC8	46080300	MN3101
•Diode		
jD3	03117600	1S2473T77
	or 46086000	1S1588TP-3
jD4	03117600	1S2473T77
	or 46086000	1S1588TP-3
jC10	46697200	0.068μF 50V F.C.
jC11	46696200	0.027μF 50V F.C.
jC12	46695500	0.013μF 50V F.C.
jC13	46693800	2700pF 50V F.C.
jC14	46697200	0.068μF 50V F.C.
jC15	46696700	0.043μF 50V F.C.
jC16	46693200	1500pF 50V F.C.
jC18	46696000	0.022μF 50V F.C.
jC19	46696000	0.022μF 50V F.C.
jC20	46696000	0.022μF 50V F.C.
jC21	46696000	0.022μF 50V F.C.
jC23	46697200	0.068μF 50V F.C.
jC24	46693200	1500pF 50V F.C.
jC25	46694200	3900pF 50V F.C.
jC26	46692800	1000pF 50V F.C.
jC27	46695400	0.012μF 50V F.C.
jC28	46696000	0.022μF 50V F.C.
jC29	46693800	2700pF 50V F.C.
jC37	46695000	8200pF 50V F.C.
jVR5	46264600	220kΩ S.V.R., echo level adj.
oS1	46266600	Push SW., SOURCE SELECTOR
oS2	46266700	Push SW., DUBBING
oS3	46266400	Push SW., REVERBERATION
oZ1	46096800	4P Pin Terminal, INPUT, TAPE-1, TAPE-2, OUTPUT

2-2. F-5452 Mic Amp. Board (Stock No. 00978501)

Component Side

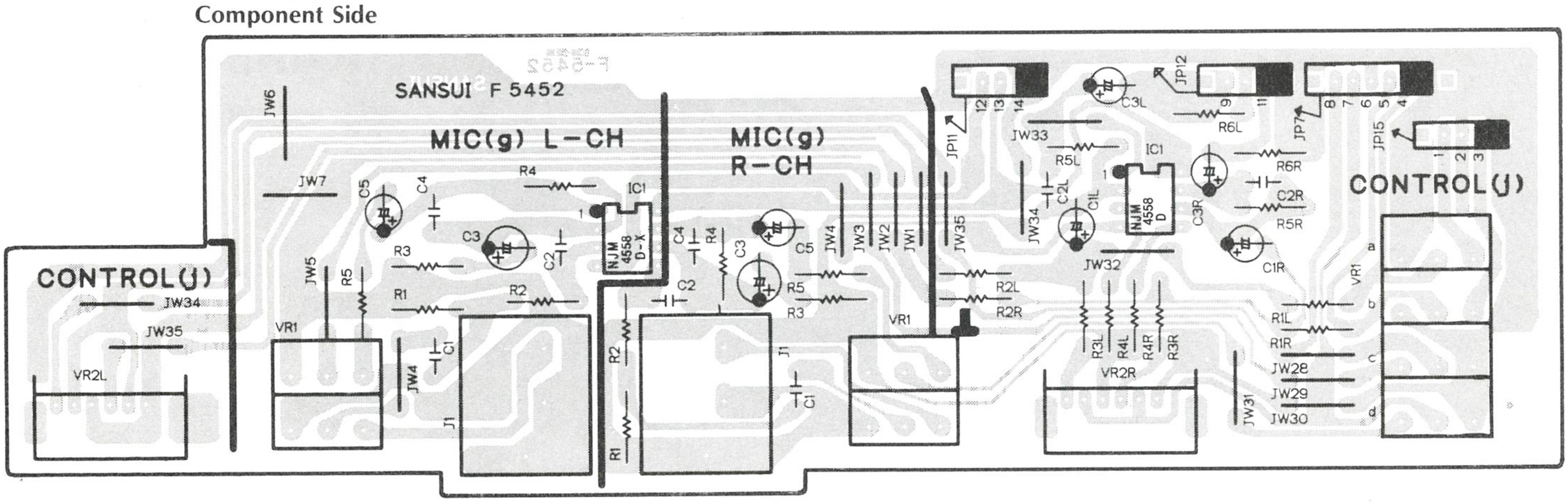

Parts List

Parts No.	Stock No.	Description
•IC		
gIC1	07208900	NJM4558D-X
	or 46673800	M5218P
gC1	46697200	0.068μF 50V F.C.
gVR1	46266100	20kΩ (B)X2 V.R., MIC/GUITAR LEVEL
•IC		
jIC1	03607700	NJM4558D
	or 46580100	M5218P
jC1	48103400	1μF 50V E.B.
jVR1	48492100	250kΩ V.R., MIXING BALANCE
jVR2	46266200	250kΩ V.R., MIC/GUITAR PANPOT
oJ1	48492200	Jack, MIC/GUITAR

2-3. F-5453 Time Delay Volume Board

Component Side

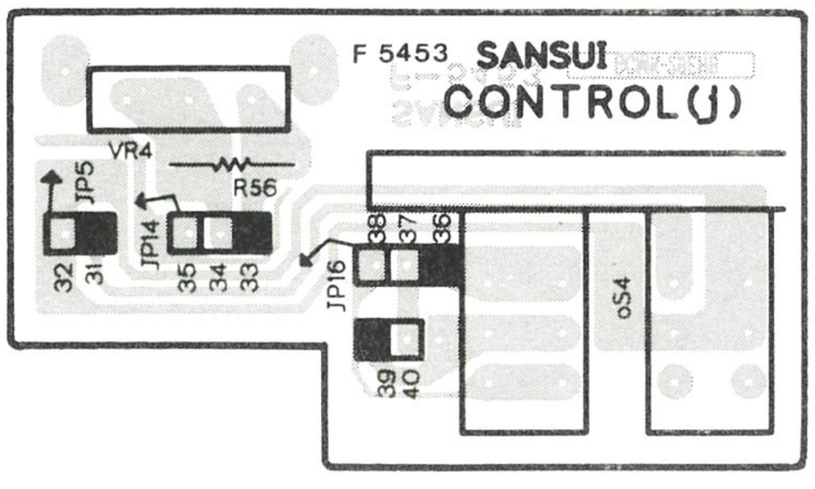

Parts List

Parts No.	Stock No.	Description
jVR4	48492000	200kΩ (B) V.R., TIME DELAY
oS4	46266500	Push SW., EFFECT MODE

www.hifiengine.com

2-4. F-5456 Power Supply & Indicator Board (Stock No. 00978901)

Component Side

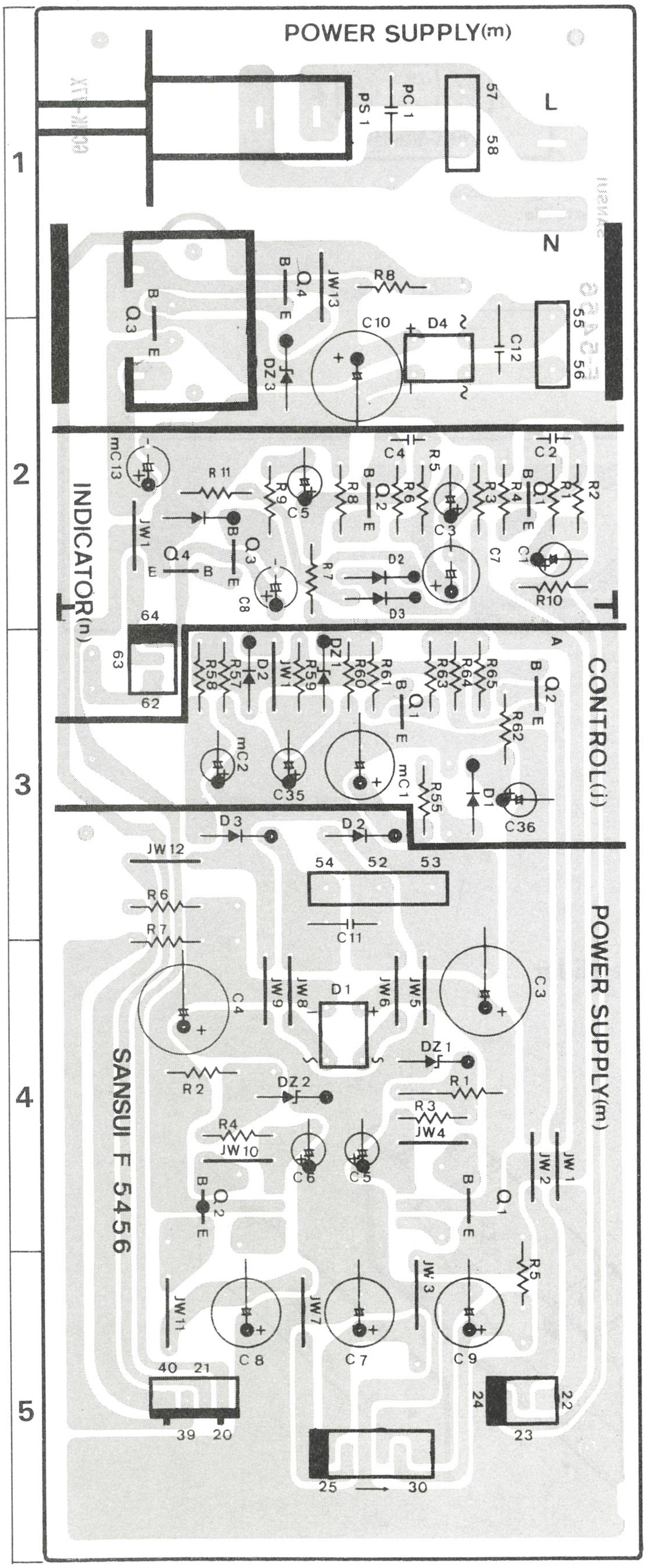

Parts List

Parts No.	Stock No.	Description
•Transistor		
jQ1	46188601	2SA1015
	or 46367401	2SA733A
jQ2	46188701	2SC1815
	or 46367501	2SC 945A
	or 46577801	2SC2320L
•Diode		
jD1	03117600	1S2473T77
	or 46086000	1S1588TP-3
jD2	03117600	1S2473T77
	or 46086000	1S1588TP-3
•Zener Diode		
jDZ1	03177400	RD6.2E-B
•Transistor		
⚠mQ1	46188701	2SC1815
⚠	or 46577801	2SC2320L
⚠mQ2	46188601	2SA1015
⚠mQ3	03083901	2SD313HP
⚠	or 46546701	2SD880
⚠	or 48369801	2SC1826
⚠mQ4	46188701	2SC1815
⚠	or 46367501	2SC 945A
⚠	or 46577801	2SC2320L
•Diode		
⚠mD1	46273600	DBB10B
⚠mD2	03117700	10E-2
⚠mD3	03117700	10E-2
⚠mD4	46273600	DBB10B
•Zener Diode		
mDZ1	03179400	RD16E-B
mDZ2	03179400	RD16E-B
mDZ3	03178800	RD12E-B
⚠mR1	46237300	2.2kΩ 1/2W N.I.R.
⚠mR2	46237300	2.2kΩ 1/2W N.I.R.
⚠mR8	46237300	2.2kΩ 1/2W N.I.R.
mC11	08680400	0.01μF 500V C.C.
mC12	08680400	0.01μF 500V C.C.
•Transistor		
nQ1	46188701	2SC1815
	or 46367501	2SC 945A
	or 46577801	2SC2320L
nQ2	46188701	2SC1815
	or 46367501	2SC 945A
	or 46577801	2SC2320L
nQ3	46188701	2SC1815
	or 46367501	2SC 945A
	or 46577801	2SC2320L
nQ4	03085201	2SD438
•Diode		
nD1	03117600	1S2473T77
	or 46086000	1S1588TP-3
nD2	03117600	1S2473T77
	or 46086000	1S1588TP-3
nD3	03117600	1S2473T77
	or 46086000	1S1588TP-3
⚠pC1	46425800	0.01μF 400V C.C.
⚠pS1	46360300	Push SW., POWER

2-5. F-5454 Depth Volume Board

Component Side

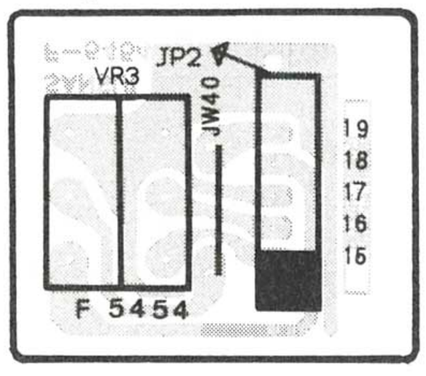

Parts List

Parts No.	Stock No.	Description
jVR3	46265900	100kΩ (B)X2 V.R., DEPTH

2-6. F-5455 Effect Mode Indicator Board

Component Side

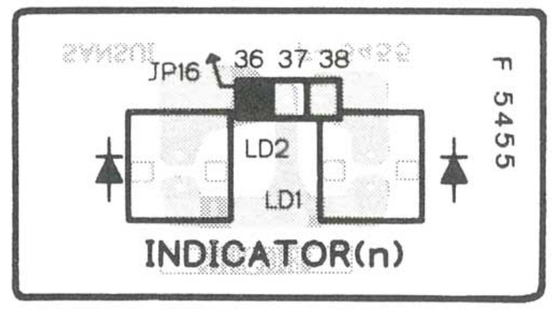

Parts List

Parts No.	Stock No.	Description
•LED		
nLD1	46174000	SLP-470C, DUET
nLD2	46174000	SLP-470C, ECHO

2-7. F-5457 Echo Lens Lamp Board

Component Side

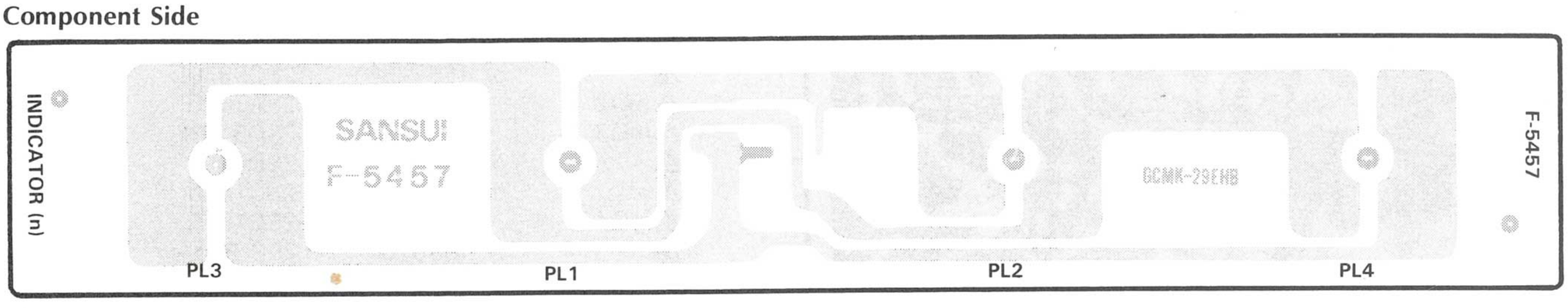

Parts List

Parts No.	Stock No.	Description
nPL1	46286600	12V 0.15A Pilot Lamp
nPL2	46286600	12V 0.15A Pilot Lamp
nPL3	46286600	12V 0.15A Pilot Lamp
nPL4	46286600	12V 0.15A Pilot Lamp

3. OTHER PARTS

3-1. Echo Lens Case & Slider

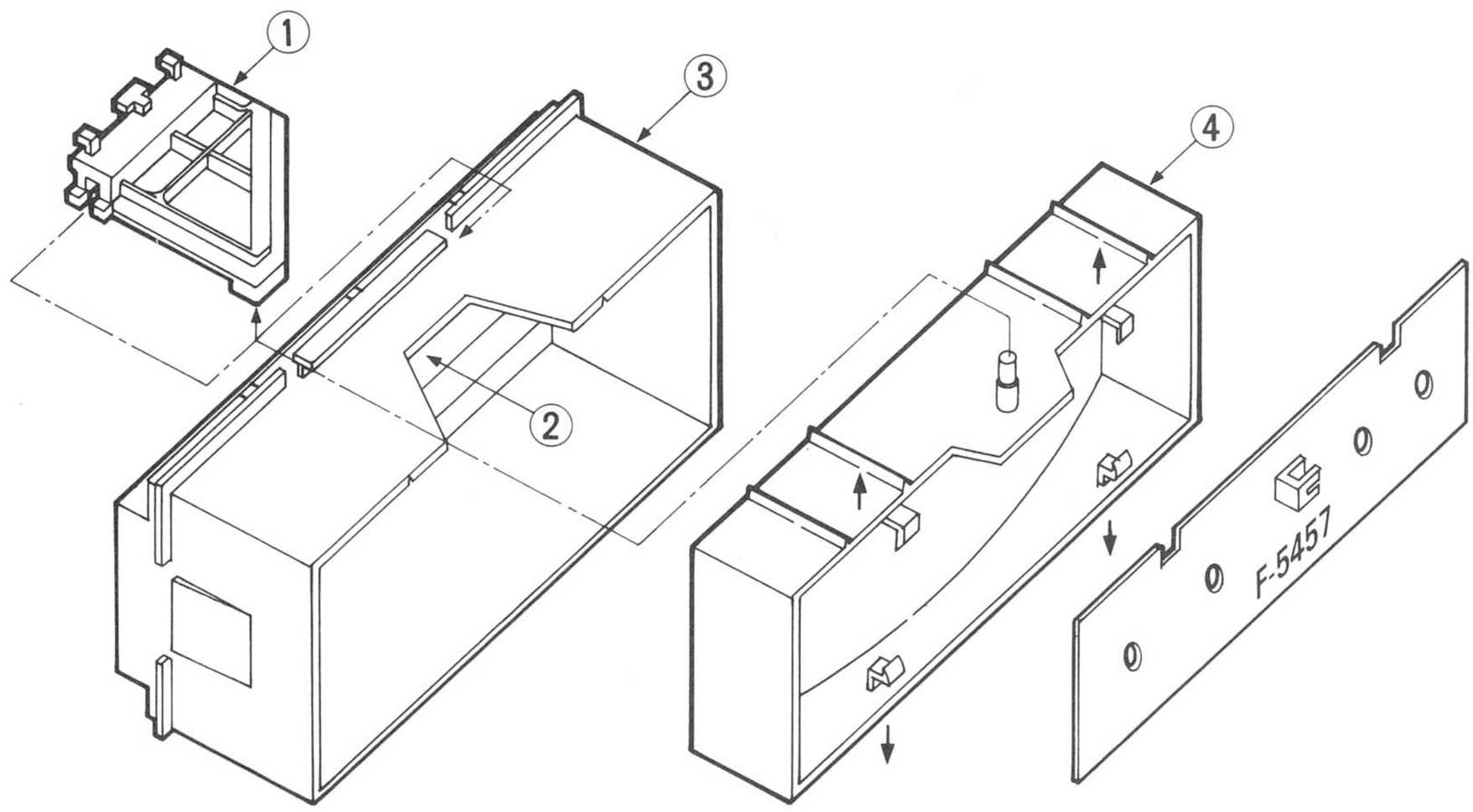

Parts List <Echo Lens Case & Slider>

Parts No.	Stock No.	Description
1	07888110	Slider
2	48414500	Echo Lens
3	07887900	Outer Case
4	27263700	Inner Case Ass'y

www.hifiengine.com

3-2. Front View

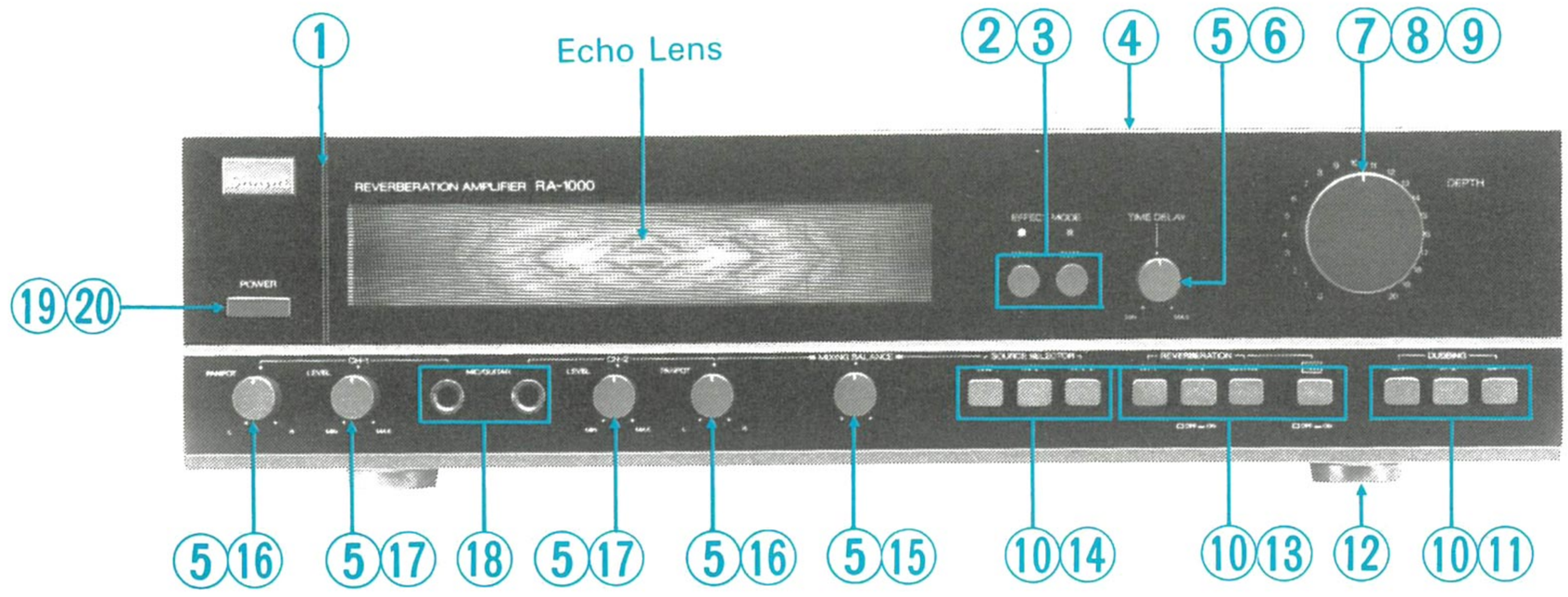

3-3. Top View

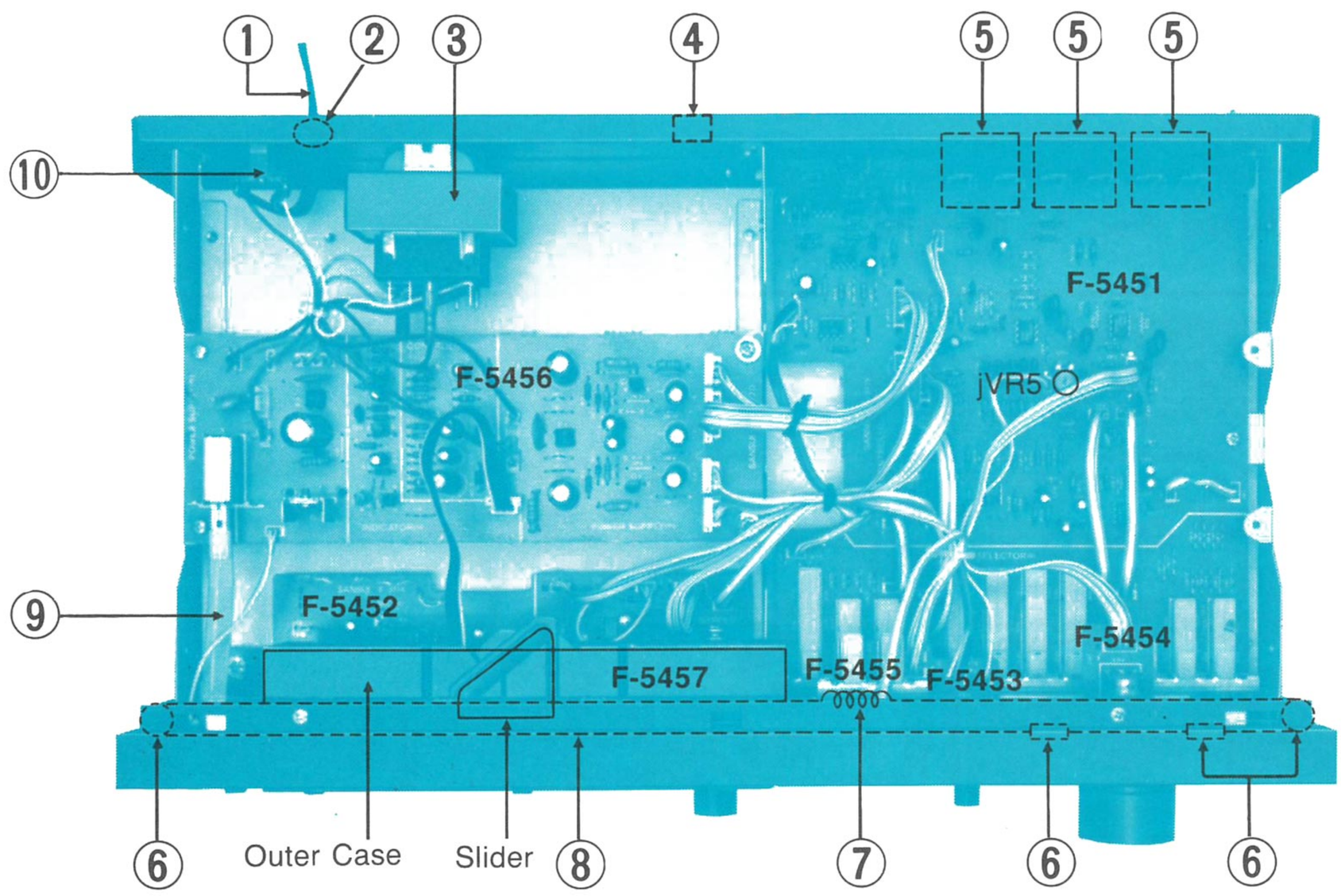

Parts List <Front View>

Parts No.	Stock No.	Description
1	27202800	Front Panel Ass'y
2	27182000	Push Knob, EFFECT MODE
3	46266500	Push SW., EFFECT MODE
4	27218700	Bonnet
5	27182100	Knob, TIME DELAY, MIXING BALANCE, MIC LEVEL, PANPOT
6	48492000	200kΩ (B) V.R., TIME DELAY
7	27181900	Knob, DEPTH
8	46265900	100kΩ (B) V.R., DEPTH
9	07595300	Masking Sheet
10	27181800	Push Knob, SOURCE SELECTOR, REVERBERATION, DUBBING
11	46266700	Push SW., DUBBING
12	07822600	Leg
13	46266400	Push SW., REVERBERATION
14	46266600	Push SW., SOURCE SELECTOR
15	48492100	250kΩ V.R., MIXING BALANCE
16	46266200	250kΩ V.R., PANPOT
17	46266100	20kΩ (B) V.R., MIC LEVEL
18	48492200	Jack, MIC/GUITAR
19	27181700	Push Knob, POWER
⚠20	46360300	Push SW., POWER

Parts List <Top View>

Parts No.	Stock No.	Description
⚠ 1	38004700	Power Supply Cord (XX)
⚠	48187500	Power Supply Cord (UL)
2	39106000	Strain Relief
⚠ 3	15025709	Power Transformer (XX)
⚠	15025702	Power Transformer (UL)
⚠ 4	48175200	Plug A, VOLTAGE SELECTOR (XX)
5	46096800	4P Pin Terminal, INPUT, TAPE-1, TAPE-2, OUTPUT
6	61467600	Pulley
7	69061300	Spring, echo lens cord
8	60360530	Dial Cord (0.6mm ϕ)
9	60400600	Switch Connection Rod
⚠10	07189600	AC Outlet (XX)
⚠	24501100	AC Outlet (UL)

www.hiflengine.com

4. SCHEMATIC DIAGRAM

* Design and specifications subject to change without notice for improvement.
* La présention et les spécifications sont susceptibles d'être modifiées sans préavis par suites d'améliorations éventuelles.
* Änderungen, die dem technischen Fortschritt dienen, bleiben vorbehalten.

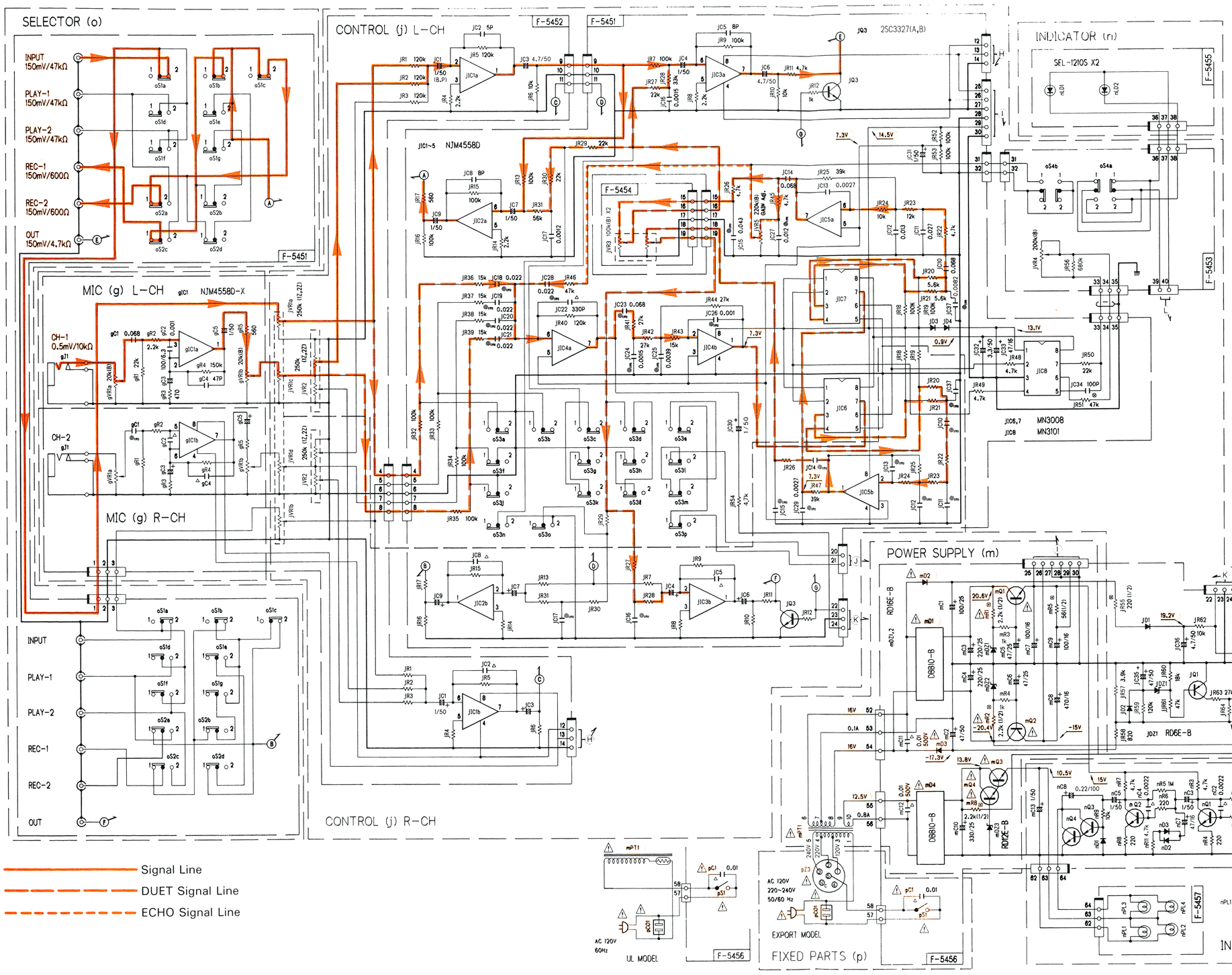

P.W.B NO.	PARTS NO.	DIODE & TRANSISTOR	OPTIONAL USE FOR TRANSISTOR & DIODE
F-5451	JD3~4	1S2473	1S1588
F-5456	JQ1	2SA733 (Q,P)	2SA1015,2SA999
	JQ2	2SC945 (Q,P)	2SC1815,2SC2320
	mQ1	2SC2320 (F)	2SC1815
	mQ2	2SA999 (E,F)	2SA1015
	mQ3	2SD313 (D,E)	
	mQ4	2SC945 (Q,P)	2SC1815,2SC2320
	nQ1~3	2SC945 (Q,P)	2SC1815,2SC2320
	nQ4	2SD438MP(E,F)	
	JD1~2	1S2473	1S1588
	nD1,4	DBB10-B	
	mD2,3	10E-2	
	nD1	1S2473	1S1588

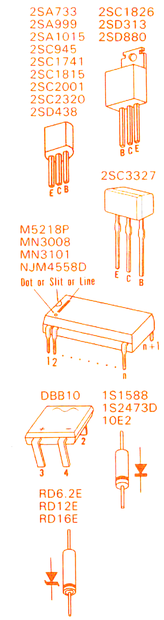

SYMBOL OF FUNCTION

(g) MIC
(j) CONTROL
(m) POWER SUPPLY
(n) INDICATOR
(o) SELECTOR
(p) FIXED PARTS

SWICH & CONTROL

S1 : INPUT SELECTOR (1 OFF, 2 ON)
S1a~c : SOURCE
S1d~e : TAPE-1
S1f~g : TAPE-2

S2 : TAPE COPY SW (1 OFF, 2 ON)
S2a~b : 1 ▷ 2
S2c~d : 2 ▷ 1

S3 : REVERBERATION SW (1 OFF, 2 ON)
S3f~l : CH-1
S3j~m : CH-2
S3a~e : SOURCE
S3n~o : REC

S4 : EFECT SW (1 OFF, 2 ON)
S4a : ECHO
S4b : DUET

RESISTORS
Are in ohms, 1/4 Watts, ±5% Tolerance
Unless Otherwise Noted. k:kΩ, M:MΩ

CAPACITORS
Are in μF, Unless Otherwise Noted. P:pF

TOLERANCE
J:±5% G:±2% F:±1%

Each D.C Voltage shows the nominal value
in volts at no input signal.

Electrolytic Capacitor:Capacitance (μF)/Volt(V)

SYMBOL
△ Ceramic
Mylar
Styrol
Non-Inflammable Resistor

⚠ IS SAFETY PART.
USE ONLY REPLACEMENT PARTS RECOMMENDED BY THE MANUFACUTURE.

5. ECHO LEVEL ADJUSTMENT

SETTING: 1) Connect the measurement units as Fig. 5-1.
2) Set the control knob as follows.

REVERBERATION ..... SOURCE
EFFECT MODE ..... ECHO
CH1/CH2 LEVEL..... Min.
SOURCE SELECTOR ..... LINE
TIME DELAY ..... Max.
DEPTH..... Max.
CH1/CH2 PANPOT ..... Center

Fig. 5-1

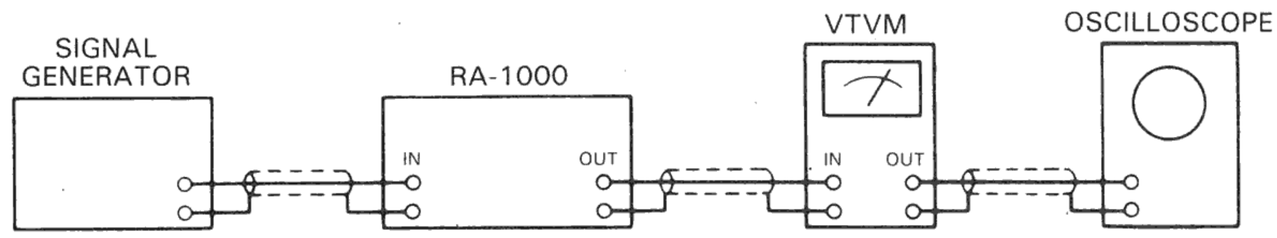

INPUT SIGNAL	MEASURE OUTPUT	STEP	ADJUSTMENT
800 Hz 1.5V SG INPUT	OUTPUT VTVM, Scope	1	Turn the semi-variable resistor jVR5 (F-5451) fully counterclockwise.
		2	Push SOURCE SELECTOR switch to set to TAPE-1 position.
		3	Confirm that the reverberation circuit starts to oscillate, and its wave form comes out from OUTPUT.
		4	Turn jVR5 slowly clockwise until the oscillation stops.
		5	After 3, 4 minutes, confirm that the oscillation stops.

Note: When the osillation at STEP 3 is not occured, STEP 4 is not necessary.

6. INTERIOR BLOCK DIAGRAM OF IC

•MN3008 (Bucket Bridge Device <BBD>)

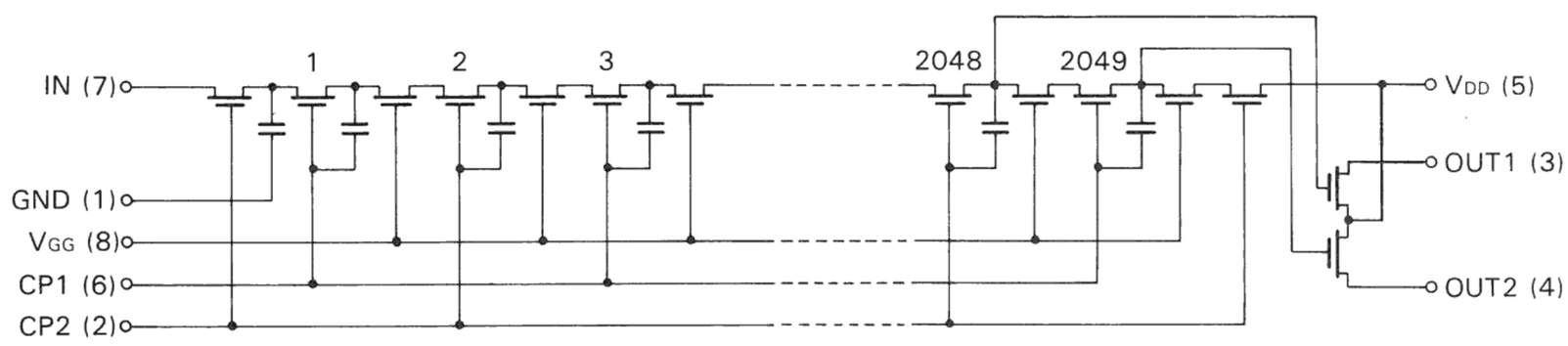

•MN3101 (BBD Clock Driver)

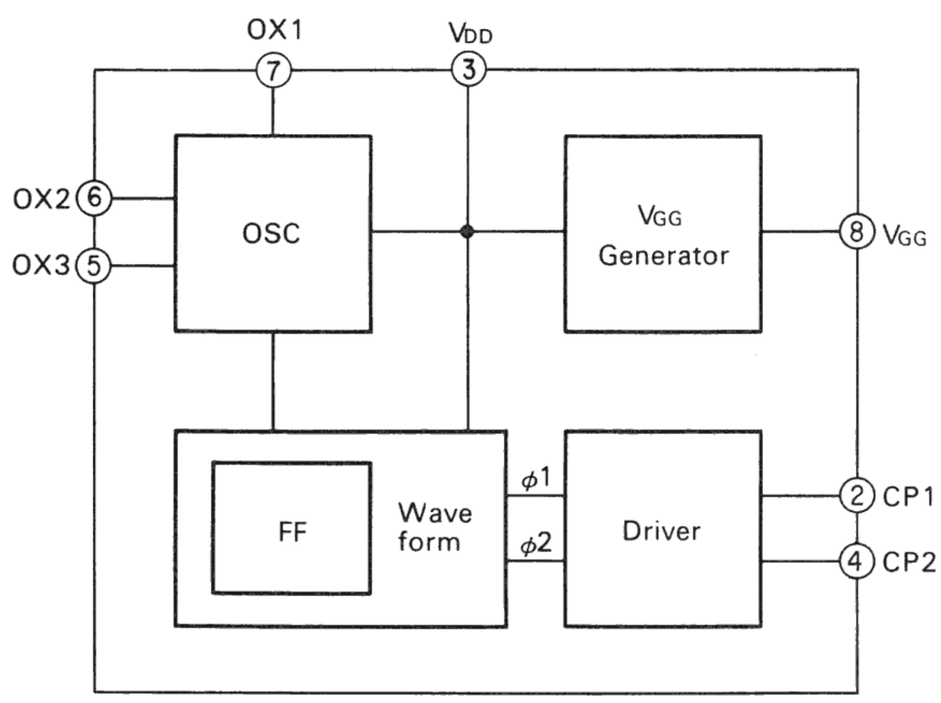

•M5218P/NJM4558D (OP AMP. IC)

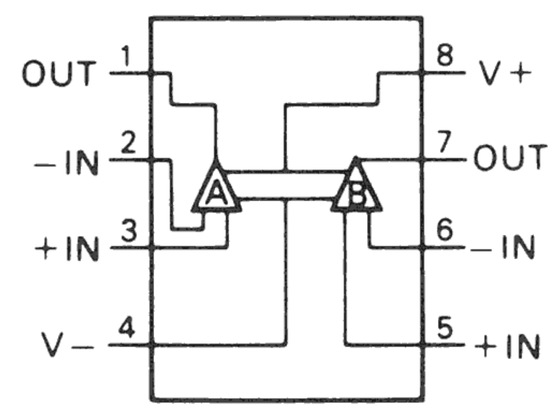

www.hifiengine.com

7. THREADING OF ECHO LENS CORD

Fig. 7-1

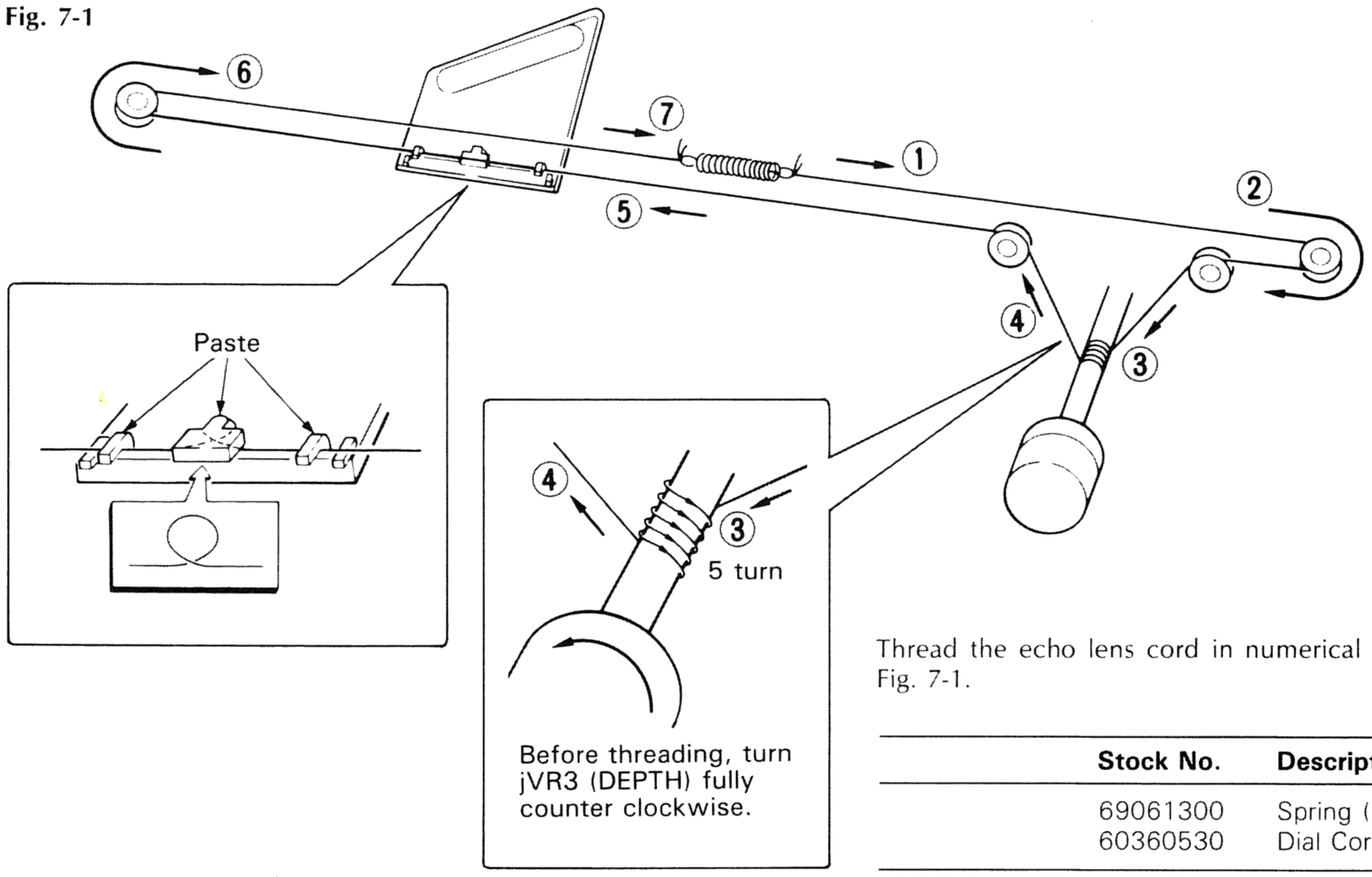

Thread the echo lens cord in numerical order from ① to ⑦ as Fig. 7-1.

Stock No.	Description
69061300	Spring (F)
60360530	Dial Cord (0.6mm ϕ)

8. PACKING LIST

Parts No.	Stock No.	Description
1	47859300	Vinyl Bag
2	07890100	Styrofoam Packing
3	27202300	Carton Case

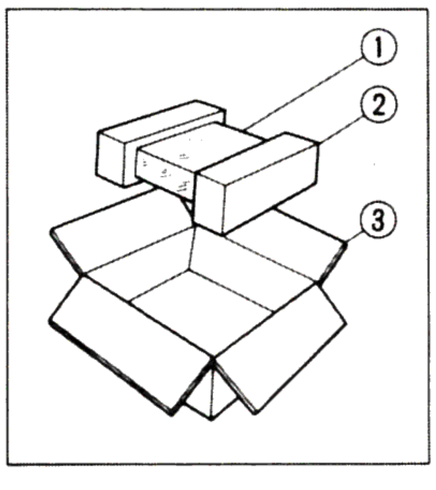

9. ACCESSORY LIST

Stock No.	Description
38103300	Pin Plug Cord
or 07193400	Pin Plug Cord
49012000	Operating Instruction

Sansui

SANSUI ELECTRIC CO., LTD.: 14-1, Izumi 2-chome, Suginami-ku, Tokyo 168 Japan
PHONE: (03) 324-8891/TELEX: 232-2076 (International Division)

SANSUI ELECTRONICS CORPORATION: 1250 Valley Brook Ave. Lyndhurst, N.J. 07071 U.S.A.
17150 South Margay Ave. Carson, California 90746 U.S.A.
3036 Koapaka Street. Honolulu, Hawaii 96819 U.S.A.

SANSUI ELECTRONICS (U.K.) LTD.: Unit 10A, Lyon Industrial Estate, Rockware Avenue, Greenford, Middx UB6, OAA, England

SANSUI ELECTRONICS G.M.B.H.: Pau Ehrich Strasse 8, 6074 Rödermark 2, West Germany

(SM1-316) Printed in Japan (565910M) <Stock No. 36524300>

www.hifiengine.com