SERVICE MANUAL

STEREO GRAPHIC EQUALIZER

SANSUI SE-510

(Silver & Black Model)

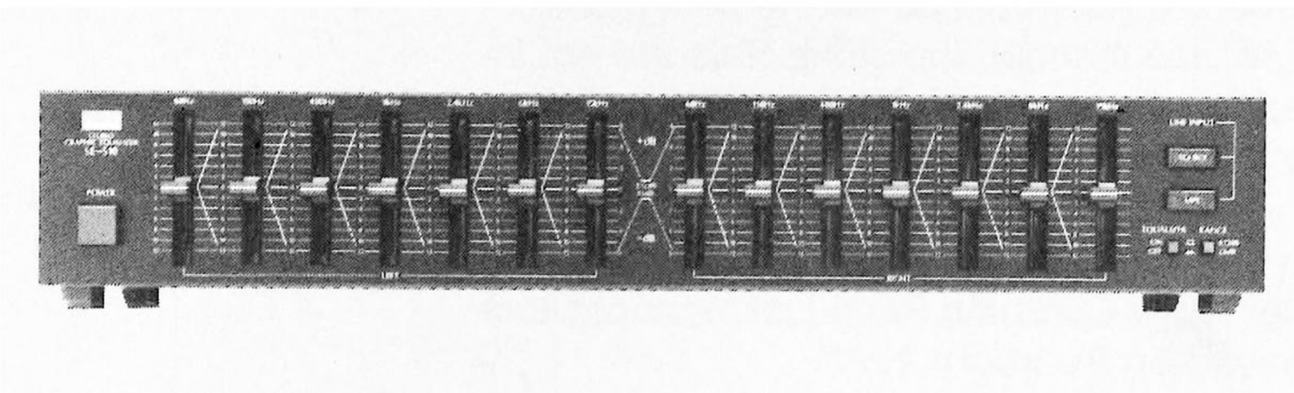

CAUTION

1. Parts identified by the ⚠ symbol on the parts list are critical for safety.
   Use only replacement parts that have critical characteristics recommended by the manufacturer.
2. Make leakage-current or resistance measurements to determine that exposed parts are acceptably insulated from the supply circuit before returning the appliance to the customer.

Sansui

SANSUI ELECTRIC CO., LTD.

•SPECIFICATIONS

Input sensitivity and impedance (1 kHz)
SOURCE IN, TAPE PLAY
..... 150 mV/47 kilohms

Output level and impedance (1 kHz)
TAPE REC..... 150 mV/1 kilohms
PRE OUT..... 150 mV/1 kilohms
(Maximum output level: 5V/47 kilohms at 0.5% total harmonic distortion)

Total harmonic distortion (1V, 20 Hz to 20 kHz)
SOURCE IN, TAPE PLAY
..... 0.01%

Frequency response (at rated output, Equalizer controls: "0" position)
SOURCE IN, TAPE PLAY
..... 20 Hz to 20 kHz, +0 dB, —2 dB

Signal to noise ratio (Short-circuit, A-network)
SOURCE IN, TAPE PLAY
..... 75 dB

Equalizer frequency..... 60 Hz, 150 Hz, 400 Hz, 1 kHz, 2.4 kHz, 6 kHz, 15 kHz

Level variation range..... ±12 dB, ±6 dB

Others

Power voltage..... 120, 220, 240 V (50/60 Hz)
For U.S.A. and Canada
..... 120 V (60 Hz)

Power consumption..... 5 watts

Dimensions..... 430 mm (16-15/16″) (W)
78 mm (3-3/4″)(H)
225 mm (8-7/8″) (D)

Weight..... 2.2 kg (4.9 lbs) net
3.0 kg (6.6 lbs) packed

* Design and specifications subject to change without notice for improvements.

www.hifiengine.com

CAUTION

1. The symbols, UL, CSA, SA, BS, UK, EU, AS and XX on the parts list and the schematic diagram mean followings respectively.

   UL..... Manufactured for U.S.A market.
   (Underwriters Laboratories approved model.)
   CSA..... Manufactured for Canadian market.
   SA..... Manufactured for South African market.
   BS, UK ..... Manufactured for United Kingdom market.
   EU ..... Manufactured for European market.
   AS..... Manufactured for Australian market.
   XX..... Standard Version.
   NON MARK ..... Common Parts.

2. Some printed circuit boards are not supplied as the assembled. To separate these in this service manual, the stock No's are not indicated at the ends of the board names. However, the individual parts on the circuit boards are provided by orders.

3. Since some of capacitors and resistors are omitted from parts lists in this service manual, refer to the Common Parts List for capacitors & resistors, which was issued on February 1983.

4. Abbreviations in this service manual are as follows.

•Abbreviations List

C.R.	: Carbon Resistor	E.B.L.	: Low Leak Bi-Polar Electrolytic Capacitor
S.R.	: Solid Resistor	Ta.C.	: Tantalum Capacitor
Ce.R.	: Cement Resistor	F.C.	: Film Capacitor
M.R.	: Metal Film Resistor	M.P.	: Metalized Paper Capacitor
F.R.	: Fusing Resistor	P.C.	: Polystyrene Capacitor
N.I.R.	: Non-Inflammable Resistor	G.C.	: Gimmic Capacitor
A.R.	: Array Resistor	A.C.	: Array Capacitor
C.C.	: Ceramic Capacitor	V.R.	: Variable Resistor
C.T.	: Ceramic Capacitor, Temoerature Compensation	S.V.R.	: Semi Variable Resistor
E.C.	: Electrolytic Capacitor	SW.	: Switch
E.L.	: Low Leak Electrolytic Capacitor	Chip R.	: Chip Resistor
E.B.	: Bi-Polar Electrolytic Capacitor	Chip C.	: Chip Capacitor

www.hifiengine.com

1. BLOCK DIAGRAM

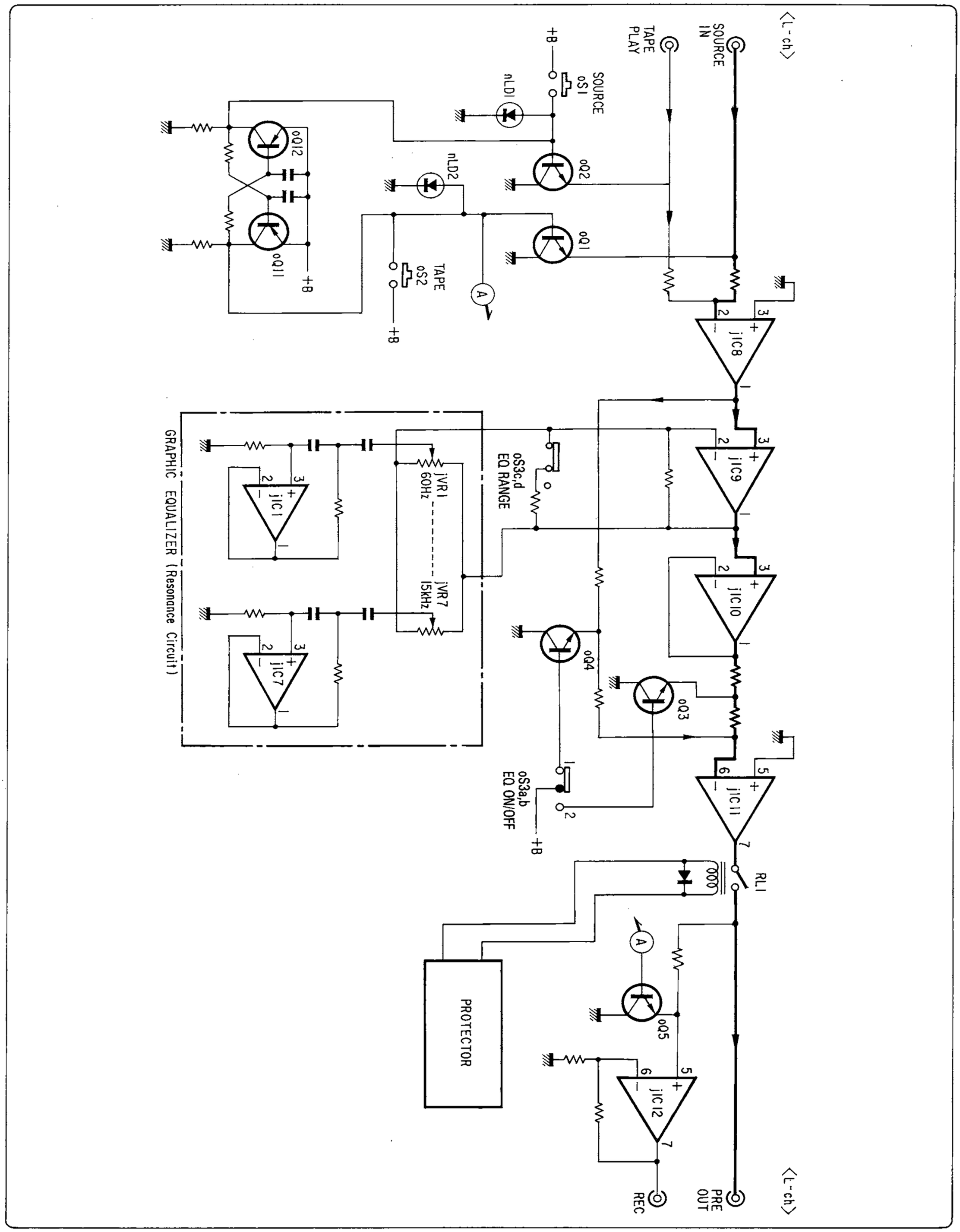

www.hifiengine.com

2. PARTS LOCATION & PARTS LIST

2-1. F-4465 Main Circuit Board (Stock No. 00788801)

Component Side

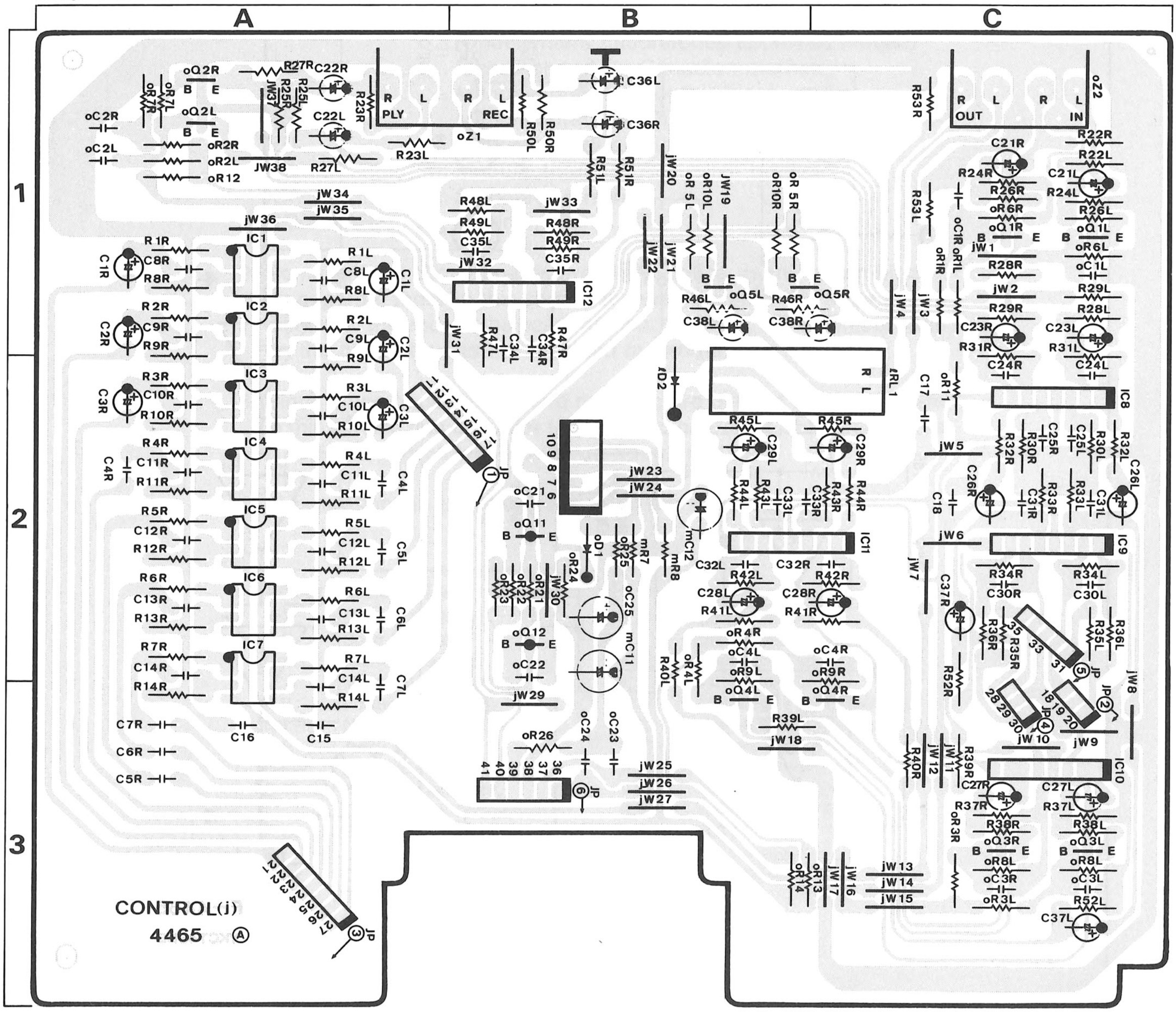

Parts List

Parts No.	Stock No.	Description
•IC		
jIC1	03607700	NJM4558D
	or 46580100	M5218P
jIC2	03607700	NJM4558D
	or 46580100	M5218P
jIC3	03607700	NJM4558D
	or 46580100	M5218P
jIC4	03607700	NJM4558D
	or 46580100	M5218P
jIC5	03607700	NJM4558D
	or 46580100	M5218P
jIC6	03607700	NJM4558D
	or 46580100	M5218P
jIC7	03607700	NJM4558D
	or 46580100	M5218P
jIC8	46147700	M5218L
jIC9	46147700	M5218L
jIC10	46147700	M5218L
jIC11	46147700	M5218L
jIC12	46147700	M5218L
jC4	46284100	0.1μF 50V F.C.
jC5	46283600	0.039μF 50V F.C.
jC8	46283700	0.047μF 50V F.C.
jC9	46283200	0.018μF 50V F.C.
jC10	46282700	6800pF 50V F.C.
jC11	46282300	2700pF 50V F.C.
jC12	46281800	1000pF 50V F.C.
•Diode		
ID2	03117700	10E-2

Parts List <F-4465>

Parts No.	Stock No.	Description
IRL1	11504700	Relay
	or 11504701	Relay LR2A-12B
⚠ mR7	08921700	10Ω 1/2W N.I.R.
⚠ mR8	08921700	10Ω 1/2W N.I.R.
•Transistor		
oQ1	46540801	2SC2878
	or 46604301	2SC3327
oQ2	46540801	2SC2878
	or 46604301	2SC3327
oQ3	46540801	2SC2878
	or 46604301	2SC3327
oQ4	46540801	2SC2878
	or 46604301	2SC3327
oQ5	46540801	2SC2878
	or 46604301	2SC3327
oQ11	46367001	2SA1115
	or 46367201	2SA1048
oQ12	46367001	2SA1115
	or 46367201	2SA1048
•Diode		
oD1	03117600	1S2473T77
	or 46086000	1S1588TP-3
⚠ oR25	08922500	47Ω 1/2W N.I.R.
oC1	46284100	0.1μF 50V F.C.
oC2	46284100	0.1μF 50V F.C.
oC3	46284100	0.1μF 50V F.C.
oC4	46284100	0.1μF 50V F.C.
oZ1	46363800	4P Terminal, TAPE
oZ2	46371500	4P Terminal, SOURCE IN/PRE OUT

2-2. F-4466 Switch Board

Component Side

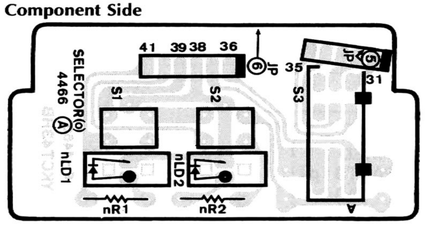

Parts List

Parts No.	Stock No.	Description
•LED		
nLD1	46176900	TLS-123
	or 46470200	SEL2210S
nLD2	46176900	TLS-123
	or 46470200	SEL2210S
oS1	46708100	Push SW., SOURCE
oS2	46708100	Push SW., TAPE
oS3	46939000	Push SW., EQUALIZER, RANGE

2-3. F-4467 EQUALIZER Volume Board

Component Side

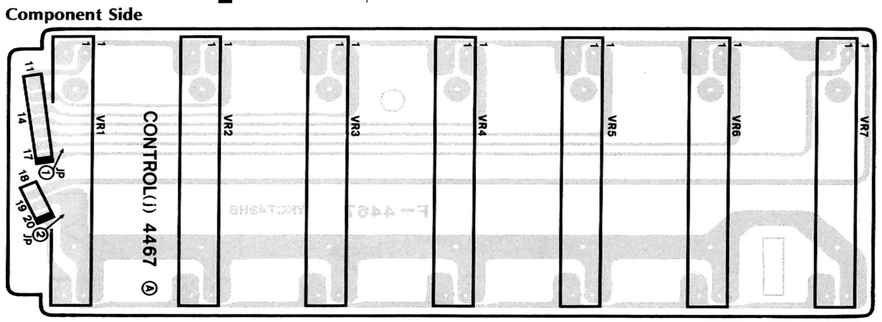

Parts List

Parts No.	Stock No.	Description
jVR1	46939100	250kΩ(W) V.R., 60Hz
jVR2	46939100	250kΩ(W) V.R., 150Hz
jVR3	46939100	250kΩ(W) V.R., 400Hz
jVR4	46939100	250kΩ(W) V.R., 1kHz
jVR5	46939100	250kΩ(W) V.R., 2.4kHz
jVR6	46939100	250kΩ(W) V.R., 6kHz
jVR7	46939100	250kΩ(W) V.R., 15kHz

2-4. F-4468 EQUALIZER Volume Board

Component Side

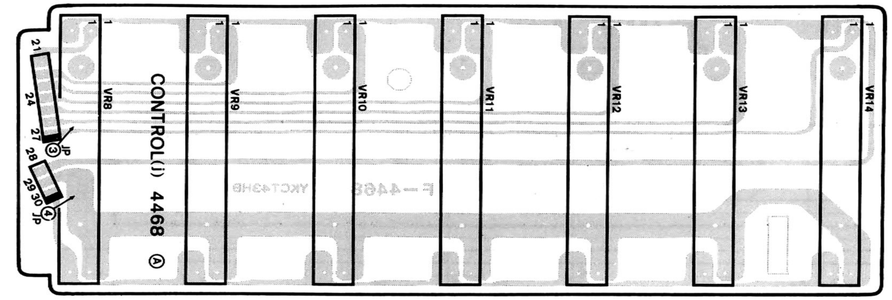

Parts List

Parts No.	Stock No.	Description
jVR8	46939100	250kΩ(W) V.R., 60Hz
jVR9	46939100	250kΩ(W) V.R., 150Hz
jVR10	46939100	250kΩ(W) V.R., 400Hz
jVR11	46939100	250kΩ(W) V.R., 1kHz
jVR12	46939100	250kΩ(W) V.R., 2.4kHz
jVR13	46939100	250kΩ(W) V.R., 6kHz
jVR14	46939100	250kΩ(W) V.R., 15kHz

2-5. F-4536 Power Supply Circuit Board

Component Side

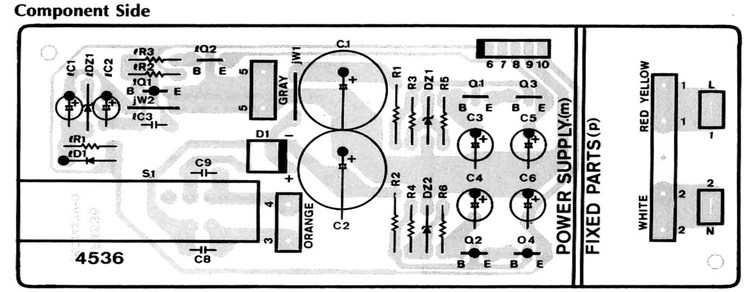

Parts List

Parts No.	Stock No.	Description
•Transistor		
IQ1	46367001	2SA1115
	or 46367201	2SA1048
IQ2	46367101	2SC2603
	or 46367301	2SC2458
•Diode		
ID1	03117600	1S2473T77
	or 46086000	1S1588TP-3
•Zener Diode		
IDZ1	46112100	05Z6.8Y
•Transistor		
⚠ mQ1	46367101	2SC3603
	or 46367301	2SC2458
⚠ mQ2	46367001	2SA1115
	or 46367201	2SA1048
⚠ mQ3	03083901	2SD313AL
⚠ mQ4	03032301	2SB507V11AL
•Diode		
⚠ mD1	46273600	DBB10-B
•Zener Diode		
mDZ1	46113900	05Z12-Y
	or 46114000	05Z12-Z
mDZ2	46113900	05Z12-Y
	or 46114000	05Z12-Z
⚠ mR1	46680900	4.7Ω 1/4W F.R. (XX, UL, CSA)
⚠	46681300	10Ω 1/4W F.R. (EU, BS, CSA)
⚠ mR2	46680900	4.7Ω 1/4W F.R. (XX, UL, CSA)
⚠	46681300	10Ω 1/4W F.R. (EU, BS, CSA)
⚠ mS1	46399900	Push SW., POWER (XX, UL, CSA)
⚠	46370901	Push SW., POWER (EU, BS, AS)

3. SCHEMATIC DIAGRAM

*Design and specifications subject to change without notice for improvement.
*La présentation et les spécifications sont susceptibles d'être modifiées sans préavis par suites d'améliorations éventuelles.
*Änderungen, die dem technischen Fortschritt dienen, bleiben vorbehalten.

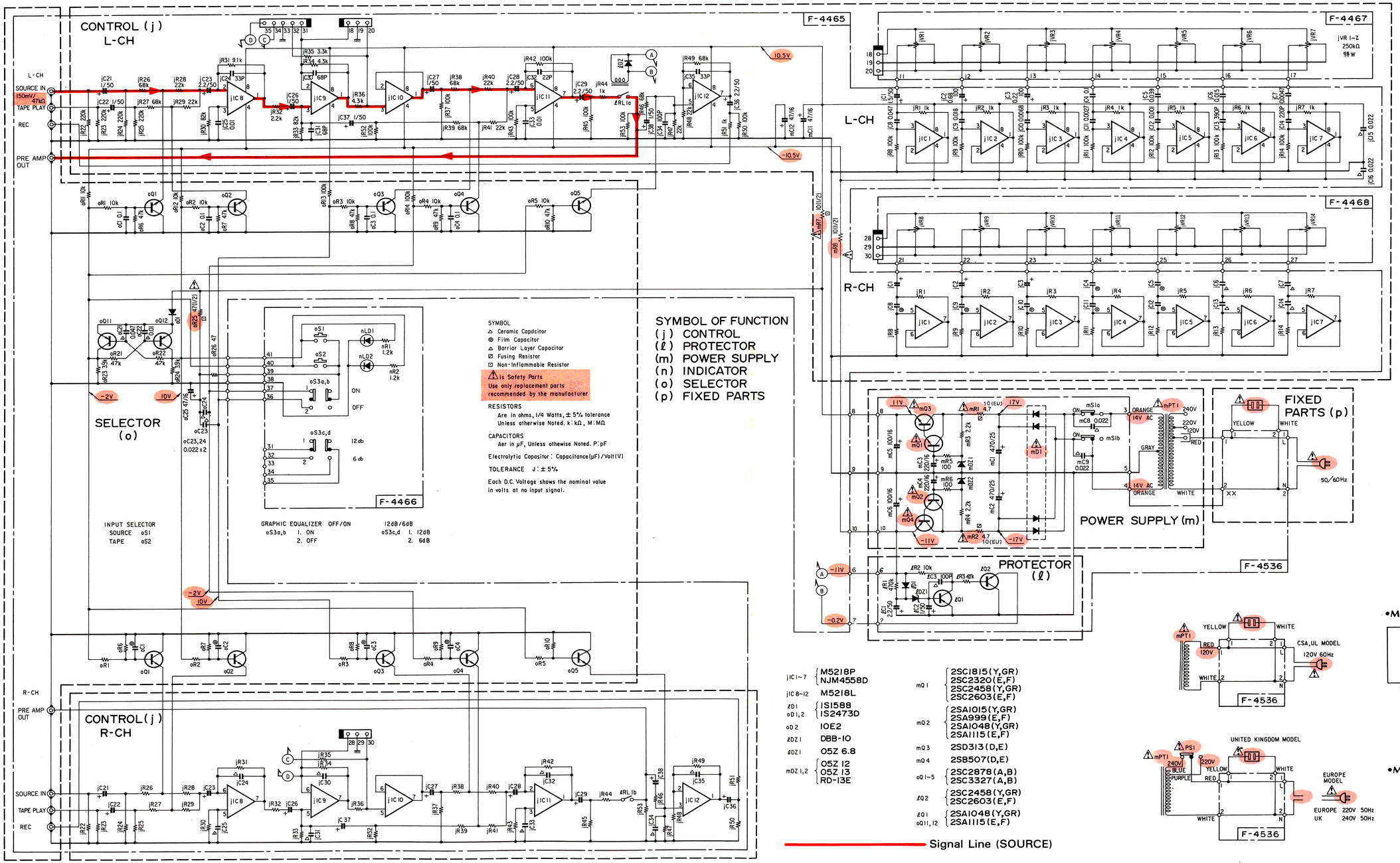

4. OTHER PARTS

4-1. Front View

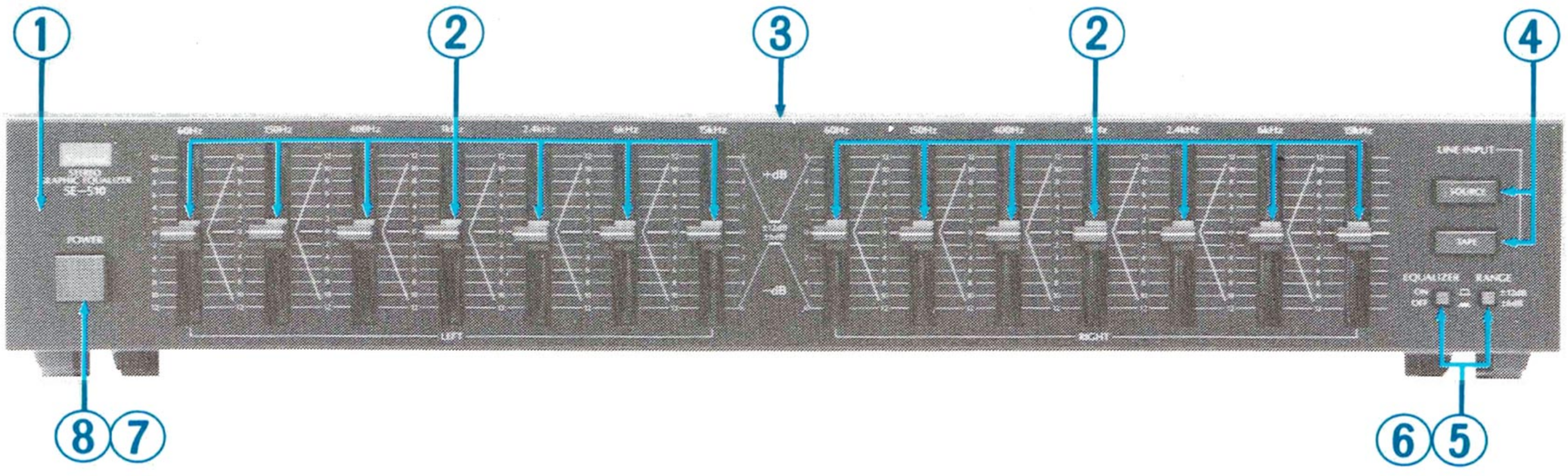

Parts List

Parts No.	Stock No.	Description
1	47501110	Front Panel Ass'y (Silver Model)
	47501210	Front Panel Ass'y (Black Model)
2	47499100	Knob, equalizer level (Silver Model)
	47499200	Knob, equalizer level (Black Model)
3	47499400	Bonnet
4	46708100	Push SW., SOURCE, TAPE
5	47526600	Knob, EQUALIZER, RANGE (Silver Model)
	47526500	Knob, EQUALIZER, RANGE (Black Model)
6	46939000	Push SW., EQUALIZER, RANGE
7	07971220	Knob, POWER (Silver Model)
	07911210	Knob, POWER (Black Model)
⚠ 8	46399900	Push SW., POWER (XX, UL, CSA)
⚠	46370901	Push SW., POWER (EU, BS, AS)

4-2. Top View

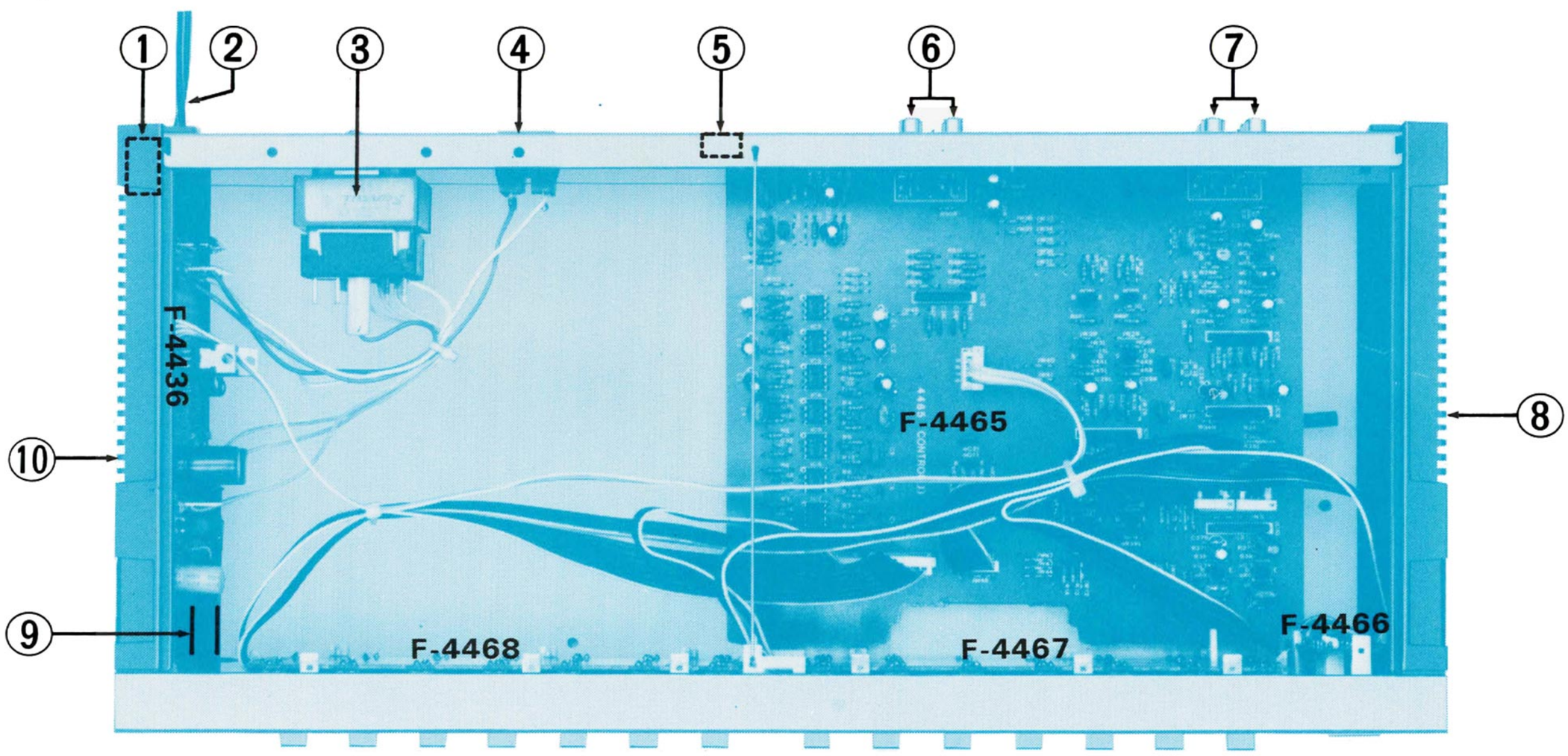

Parts List

Parts No.	Stock No.	Description
1	07917700	AC Cord Cover
⚠ 2	38005400	Power Supply Cord (XX)
⚠	38004700	Power Supply Cord (UL, CSA)
⚠	38004500	Power Supply Cord (EU)
⚠	38004300	Power Supply Cord (BS)
⚠	07204200	Power Supply Cord (AS)
⚠ 3	15015301	Power Transformer (XX)
⚠	15015302	Power Transformer (UL, CSA)
⚠	15015305	Power Transformer (EU, BS, AS)
⚠ 4	46364900	AC OUTLET (XX, UL, CSA)
⚠	46161000	AC OUTLET (EU)
⚠	46364800	AC OUTLET (BS)
⚠	46580600	AC OUTLET (AS)
⚠ 5	07204700	Slide SW., Voltage Selector (EU, BS)
6	46363800	4P Terminal, TAPE
7	46371500	4P Terminal, SOURCE IN/PRE OUT
8	07965500	Side Panel Ass'y (R)
9	07963900	Joint Shaft
10	07965400	Side Panel Ass'y (L)

www.hifiengine.com

5. PACKING LIST

Parts No.	Stock No.	Description
1	07599500	Vinyl Cover
2	07965300	Styrofoam Packing
3	47500200	Carton Case (Silver Model)
	47500100	Carton Case (Black Model)

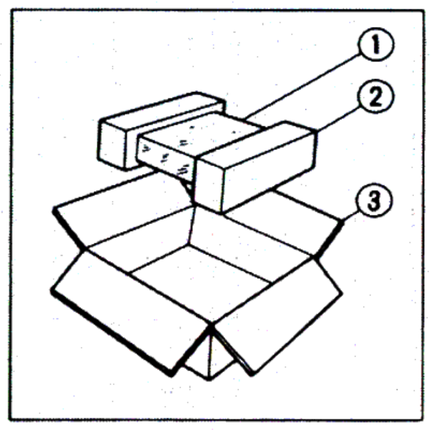

6. ACCESSORY LIST

Stock No.	Description
38103200	Pin Plug Cord
46897100	Operating Instruction

Sansui

SANSUI ELECTRIC CO., LTD.: 14-1, Izumi 2-chome, Suginami-ku, Tokyo 168 Japan
PHONE: (03) 324-8891/TELEX: 232-2076 (International Division)
SANSUI ELECTRONICS CORPORATION: 1250 Valley Brook Ave. Lyndhurst, N.J. 07071 U.S.A.
17150 South Margay Ave. Carson, California 90746 U.S.A.
3036 Koapaka Street. Honolulu, Hawaii 96819 U.S.A.
SANSUI ELECTRONICS (U.K.) LTD.: Unit 10A, Lyon Industrial Estate, Rockware Avenue, Geenford, Middx UB6, OAA, England
SANSUI ELECTRONICS G.M.B.H.: Pau Ehrich Strasse 8, 6074 Rödermark 2, West Germany

(SM1-143) Printed in Japan (140620M) <Stock No. 36492600>

www.hifiengine.com