SERVICE MANUAL

AM/FM STEREO AUTO SEARCH TUNER

SANSUI T-707/707L

(Silver & Black Model)

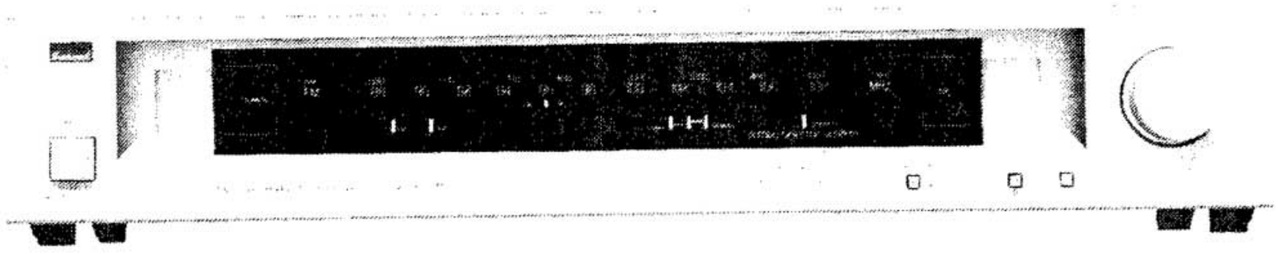

Sansui

SANSUI ELECTRIC CO., LTD.

• SPECIFICATIONS

• T-707

FM Section

Tuning range . . . . . 88 to 108 MHz
Usable sensitivity
Mono IHF . . . . . 10.8 dBf (1.9 μV: T-100)
DIN . . . . . 0.9 μV
50 dB quieting sensitivity
Mono . . . . . 16.5 dBf
Stereo . . . . . 37.0 dBf
Signal to noise ratio at 65 dBf
Mono . . . . . 75 dB
Stereo . . . . . 70 dB
Distortion at 65 dBf
Mono . . . . . less than 0.15 % at 1,000 Hz
Stereo . . . . . less than 0.2 % at 1,000 Hz
Alternate channel selectivity (at 400 kHz)
. . . . . 55 dB
Stereo separation . . . . 40 dB at 1,000 Hz
Frequency response . . 30 to 15,000 Hz
+1.0 dB, −1.5 dB
Antenna input impedance
. . . . . 300 ohms balanced
75 ohms unbalanced

AM Section

Tuning range . . . . . 530 to 1,600 kHz
Usable sensitivity (Loop antenna)
. . . . . 53 dB/m (446 μV/m)
Signal to noise ratio . . 45 dB
Image response ratio . . 40 dB at 1,000 kHz

Others

Output voltage and impedance
. . . . . 500 mV/2.2 kilohms
Power requirements . . 120/220/240 V (50/60 Hz)
For U.S.A. and Canada
. . . . . 120 V (60 Hz)
Power consumption . . 13 W
Dimensions . . . . . 430 mm (16-15/16") W
78 mm (3-1/8") H
238 mm (9-3/8") D
Weight . . . . . 3.0 kg (6.6 lbs.) net
3.8 kg (8.4 lbs.) packed

• T-707L

FM Section

Tuning range . . . . . 88 to 108 MHz
Usable sensitivity
Mono IHF . . . . . 10.8 dBf (1.9 μV: T-100)
DIN . . . . . 0.9 μV
50 dB quieting sensitivity
Mono . . . . . 16.5 dBf
Stereo . . . . . 37.0 dBf
Signal to noise ratio at 65 dBf
Mono . . . . . 75 dB
Stereo . . . . . 70 dB
Distortion at 65 dBf
Mono . . . . . less than 0.15 % at 1,000 Hz
Stereo . . . . . less than 0.2 % at 1,000 Hz
Alternate channel selectivity (at 400 kHz)
. . . . . 55 dB
Stereo separation . . . . 40 dB at 1,000 Hz
Frequency response . . 30 to 15,000 Hz
+1.0 dB, −1.5 dB
Antenna input impedance
. . . . . 300 ohms balanced
75 ohms unbalanced

AM (MW, LW) Section

Tuning range . . . . . MW: 530 to 1,600 kHz
LW: 150 to 350 kHz
Usable sensitivity . . . . MW: 53 dB/m (446 μV/m)
LW: 62 dB/m
Signal to noise ratio . . 45 dB
Image response ratio . . MW: 40 dB at 1,000 kHz
LW: 35 dB at 250 kHz

Others

Output voltage and impedance
. . . . . 500 mV/2.2 kilohms
Power requirements . . 220, 240 V (50/60 Hz)
Power consumption . . 13 W
Dimensions . . . . . 430 mm (16-15/16") W
78 mm (3-1/8") H
238 mm (9-3/8") D
Weight . . . . . 3.0 kg (6.6 lbs.) net
3.8 kg (8.4 lbs.) packed

* Design and specifications subject to changes without notice for improvements.

www.hiflengine.com

1. BLOCK DIAGRAM

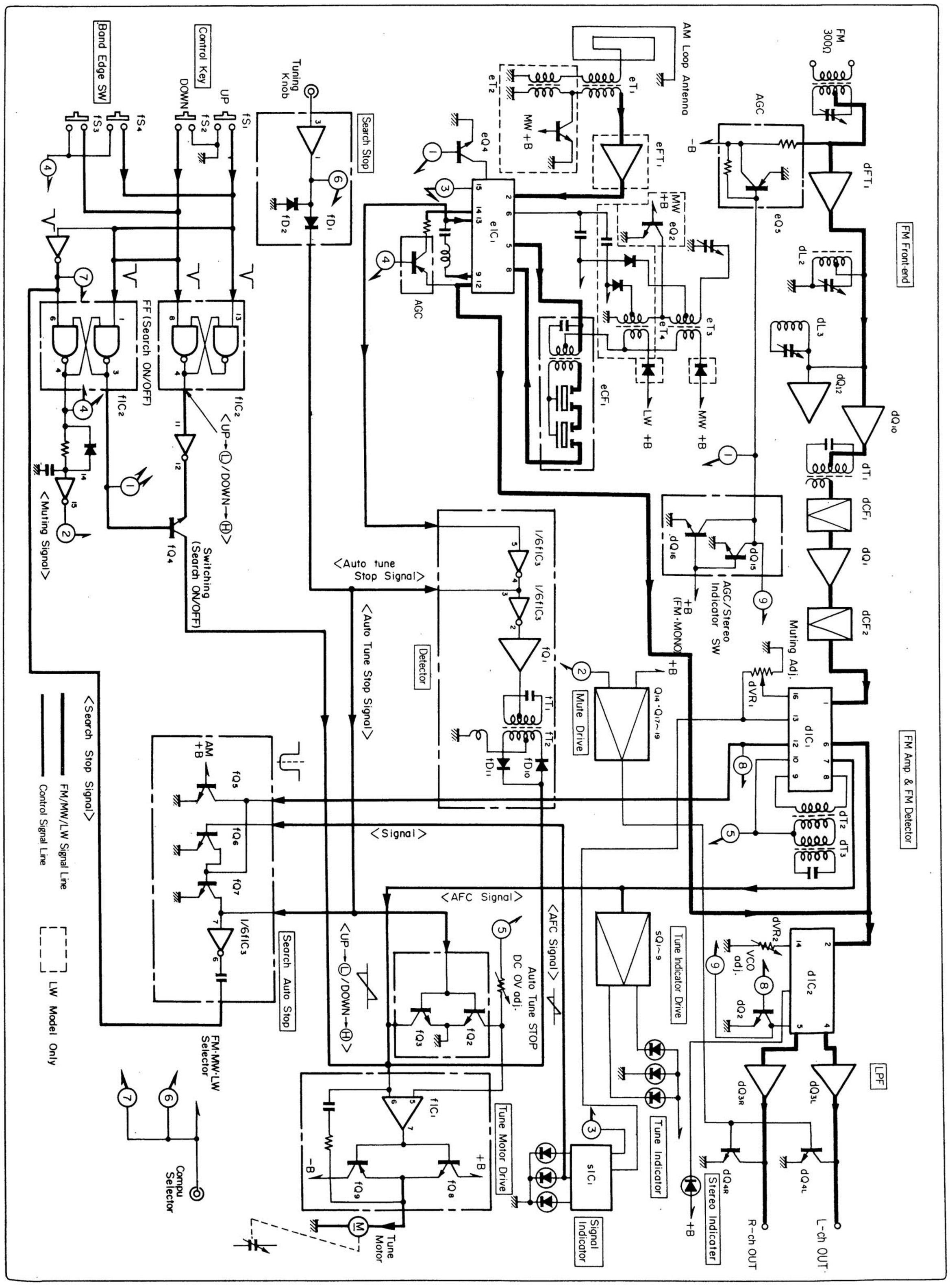

2. ADJUSTMENTS

2-1. FM Adjustment (See Top View on Page 8)

Note: 1. Selector . . . . . FM
2. Remove the lead wires from terminals 56 and 57.

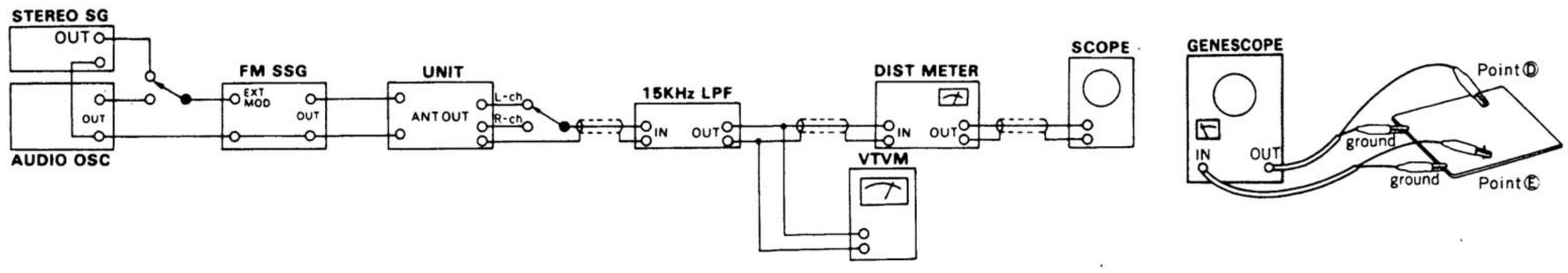

(1) FM IF, RF Adjustment and Dial Calibration

Note: MUTING/SEARCH Switch . . . . . OFF

STEP	SUBJECT		FEED SIGNAL FROM	FEED SIGNAL TO	MEASURE OUTPUT	ADJUST	ADJUST FOR	REMARKS
1.	IF Coil Adj.		98MHz ANT Input 20dBf (14.8dB), 1kHz (100% MOD.), FM SSG	ANT terminal 300Ω	Between Point Ⓐ (sR18) & Earth DC Volt Meter	dT1 (F-3854)	Max. DC Volt	
2.	Discriminator Coil Adj. In case of using Genescope	1	No Input	–	Between Point Ⓑ & Point Ⓒ (dR41) or Between TP1 & TP2 DC Volt Meter • See Parts Location F-3767, F-3854 on page 6	dT2 (F-3767)	DC 0V ±0.1V	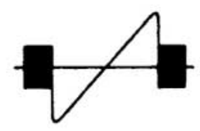
		2	Output 80dB, Genescope	Point Ⓓ (dTC2)	Between Point Ⓔ (dD2) & Earth • See Parts Location F-3767 on page 6	dT3 (F-3767)	Steep linearity of S curve. Make symmetrical S curve.	
	Discriminator Coil Adj. In case of using Dist meter	1	No Input		Between Point Ⓑ & Point Ⓒ (dR41) or Between TP1 & TP2 DC Volt Meter • See Parts Location F-3767, F-3854 on page 6	dT2 (F-3767)	DC 0V ±0.1V	• Repeat procedures as stated in subject 1 & 2. • Since the dT1 has already adjusted, perform only a fine adjustment in this procedure.
		2	98MHz ANT Input 65dBf (59.8dB), 1kHz (100% MOD.), FM SSG	ANT terminal 300Ω	OUTPUT L-CH or R-CH VTVM & SCOPE Dist Meter	dT3, dT1 (F-3767)	Min. THD	
3.	90MHz Dial Calibration		90MHz ANT Input 65dBf (59.8dB), 1kHz (100% MOD.), FM SSG	Same as above	Dial Pointer	Tuning Knob	90MHz	• Repeat procedures as stated in step 3 & 4.
					OUTPUT L-CH or R-CH VTVM & SCOPE	dL3 (F-3854)	Max. Output	
4.	106MHz Dial Calibration		106MHz ANT Input 65dBf (59.8dB) 1kHz (100% MOD.), FM SSG	Same as above	Dial Pointer	Tuning Knob	106MHz	
					OUTPUT L-CH or R-CH VTVM & SCOPE	dTC3 (F-3854)	Max. Output	
5.	90MHz RF Adj.		90MHz ANT Input Minimum value with sine wave 1000Hz (100% MOD.), FM SSG	Same as above	OUTPUT L-CH or R-CH VTVM & SCOPE	dL1, dL2 (F-3854)	Max. Output	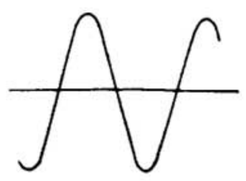
6.	106MHz RF Adj.		106MHz ANT Input Minimum value with sine wave 1000Hz (100% MOD.), FM SSG	Same as above	Same as above	dTC1, dTC2 (F-3854)	Max. Output	

www.hifiengine.com

(2) Automatic Search Stop Adjustment

Note: 1. MUTING/SEARCH Switch . . . . ON
2. Short between the Point I (fD1) and the ground.

STEP	SUBJECT		FEED SIGNAL FROM	FEED SIGNAL TO	MEASURE OUTPUT	ADJUST	ADJUST FOR	REMARKS
1.	FM DC 0V Adj.	1	98MHz ANT Input 65dBf (59.8dB), 1kHz (100% MOD.), FM SSG	ANT terminal 300Ω	Between TP1 & TP2 DC Volt Meter or between Point Ⓑ & Point Ⓒ (dR41)	Tuning Knob	DC 0V (Just Tune)	• See Parts Location F-3767 on Page 6, F-3800 on Page 7.
		2	Same as above	Same as above	Between TP5 & TP6 DC Volt Meter	fVR1	DC 0V	

(3) FM STEREO Adjustment

Note: MUTING/SEARCH Switch . . . . . ON

STEP	SUBJECT	FEED SIGNAL FROM	FEED SIGNAL TO	MEASURE OUTPUT	ADJUST	ADJUST FOR	REMARKS
1.	PLL VCO Adj.	98MHz ANT Input 65dBf (59.8dB), FM SSG, Pilot 19kHz (9% MOD.), R or L MODE 1kHz + Pilot (100% MOD.), STEREO SG	ANT terminal 300Ω	Stereo indicator	dVR2 (F-3767)	Light indicator	Adjust the VR within center of lighting level
	PLL VCO Adj. In case of using Freq. Counter	98MHz ANT Input 65dBf (59.8dB), FM SSG, No MOD.	Same as above	Between Point Ⓕ (Pin 10 of dIC2) or TP3 & Earth Freq. counter • See Parts Location F-3767, F-3854 on page 6	dVR2 (F-3767)	19kHz ±50Hz	
2.	Muting level Adj.	98MHz ANT Input 23dBf (17.8dB), FM SSG Pilot 19kHz (9% MOD.), L or R MODE 1kHz + Pilot (100% MOD.), STEREO SG.	Same as above	Stereo indicator or OUTPUT L-CH or R-CH VTVM & SCOPE	dVR1 (F-3854)	Stereo indicator turns ON or Output Signal comes out	

♦ ADJUSTMENT FOR FM

- There are two kind in indication of FM SG output attenuator
  1. Attenuator with marking of 75Ω open . . open indication type.
  2. Attenuator with marking of 75Ω load or close . . . . . load or close indication type.
- FM SG output level in this FM adjustment are described as open indication type.
- To feed FM signal, a dummy antenna circuit as Fig. 2-1 must be connected between FM SG output and ANT terminal (300Ω) of the unit.

Fig. 2-1

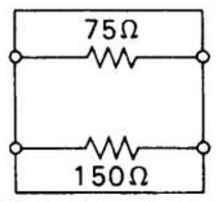

Dummy antenna

- The following table shows relations among FM SG attenuator indication (dB), available power radio (dBf) and antenna terminal voltage (dB/μV) in each indication type.

	FM SG Attenuator Indication	Available Power Ratio	Antenna Terminal Voltage
Open indication type	0 dB 66 dB	−0.8 dBf 65.2 dBf	−6 dB/μV 60 dB/μV
Load or close indication type	0 dB 60 dB	5.2 dBf 65.2 dBf	0 dB/μV 60 dB/μV

•Abbreviations

Equipment
AM FM Generator Oscilloscope . . . . . Genescope
AM Standard Signal Generator . . . . . AM SSG
FM Standard Signal Generator . . . . . FM SSG
FM Stereo Generator . . . . . Stereo SG
Oscilloscope . . . . . Scope
Audio Oscillator . . . . . Audio Osc.
Distortion Meter . . . . . Dist. Meter

Others
Antenna . . . . . ANT.
Modulation . . . . . MOD.
Total Harmonic Distortion . . . . . T.H.D.

www.hiflengine.com

2-2. AM Adjustment (See Top View on Page 8)

Note: 1. SELECTOR . . . . . AM
2. Remove the lead wires from the terminals 56 and 57.

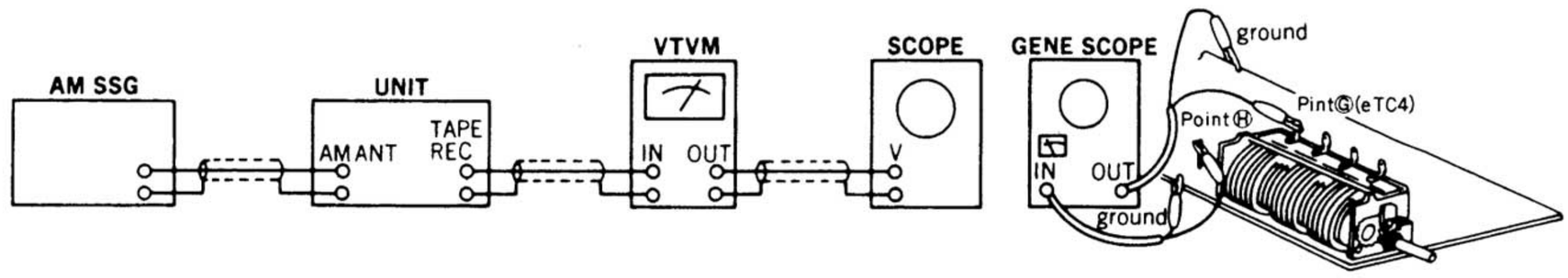

(1) AM IF Adjustment & MW (AM) Dial Calibration

Note: SELECTOR . . . . . MW (T-707L)

STEP	SUBJECT	FEED SIGNAL FROM	FEED SIGNAL TO	MEASURE OUTPUT	ADJUST	ADJUST FOR	REMARKS
1.	IF Coil Adj.	Genescope Output 60dB	Point Ⓖ (eTC4)	Point Ⓗ (eR26) • See Parts Location F-3746 on Page 7	eCF1 eL2 (F-3746)	Max. Waveform	
2.	600kHz Dial Calibration	600kHz ANT Input ANT Input 60dB 400Hz (30% MOD.) AM SSG	ANT terminal	Dial Pointer	Tuning Knob	600kHz	
				OUTPUT L-CH or R-CH VTVM & Scope	eT3 (F-3854)	Max. Output	
3.	1400kHz Dial Calibration	1400kHz ANT Input 60dB 400Hz (30% MOD.) AM SSG	Same as above	Dial Pointer	Tuning Knob	1400kHz	
				OUTPUT L-CH or R-CH VTVM & Scope	eTC4 (F-3854)	Max. Output	
4.	600kHz RF Adj.	600kHz ANT Input 50dB 400Hz (30% MOD.) AM SSG	Same as above	OUTPUT L-CH or R-CH VTVM & Scope	eT1 (F-3854)	Max. Output	
5.	1400kHz RF Adj.	1400kHz ANT Input 50dB 400Hz (30% MOD.) AM SSG	Same as above	OUTPUT L-CH or R-CH VTVM & Scope	eTC3 (F-3854)	Max. Output	

(2) Automatic Search Stop Adjustment

Note: 1. MUTING/SEARCH Switch . . . . . ON
2. Short between the Point I (fD1) and the ground.
3. SELECTOR . . . . . MW (T-707L)

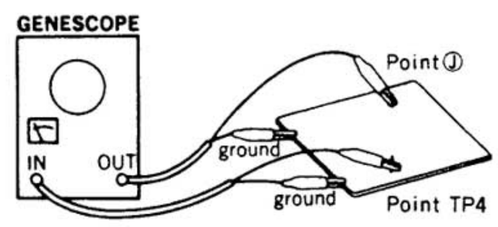

STEP	SUBJECT		FEED SIGNAL FROM	FEED SIGNAL TO	MEASURE OUTPUT	ADJUST	ADJUST FOR	REMARKS
1.	AM DC 0V Adj. Discriminator Coil Adj. In case of using Genescope		Output 60dB Genescope	Point Ⓙ (fR27)	Between TP4 & Earth	fT2 (Blue) fT1 (Pink)	• Steep linearity of S curve. • Make symmetrical S curve. • Max. wave.	
	AM DC 0V Adj. In case of using DC Volt Meter	1	1000kHz, ANT Input 60dB, 400Hz (30% MOD.), AM SSG	ANT terminal	OUTPUT L-CH or R-CH VTVM & Scope	Tuning Knob	Max. Output	
		2	Same as above	Same as above	Between TP4 & Earth DC Volt Meter	fT2	DC 0V	
	Discriminator Coil Adj. In case of using DC Volt Meter	3	Same as above	Same as above	Same as above	Tuning Knob	Max. DC Volt	
		4	Same as above	Same as above	Same as above	fT1	Max. DC Volt	

www.hifiengine.com

(3) LW Dial Calibration (T-707L Only)

Note: SELECTOR . . . . . LW

STEP	SUBJECT	FEED SIGNAL FROM	FEED SIGNAL TO	MEASURE OUTPUT	ADJUST	ADJUST FOR	REMARKS
1.	170kHz Dial Calibration	170kHz ANT Input 60dB 400Hz (30% MOD.) AM SSG	ANT terminal	Dial Pointer	Tuning Knob	170kHz	
				OUTPUT L-CH or R-CH VTVM & Scope	eT4 (F-3854)	Max. Output	
2.	300kHz Dial Calibration	300kHz ANT Input 60dB 400Hz (30% MOD.), AM SSG	Same as above	Dial Pointer	Tuning Knob	300kHz	
				OUTPUT L-CH or R-CH VTVM & Scope	eTC2 (F-3854)	Max. Output	
3.	170kHz RF Adj.	170kHz ANT Input 50dB 400Hz (30% MOD.), AM SSG	Same as above	OUTPUT L-CH or R-CH VTVM & Scope	eT2 (F-3854)	Max. Output	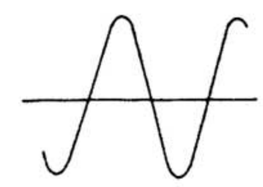
4.	300kHz RF Adj.	300kHz ANT Input 50dB 400Hz (30% MOD.), AM SSG	Same as above	OUTPUT L-CH or R-CH VTVM & Scope	eTC1 (F-3854)	Max. Output	

3. MAIN PARTS REPLACEMENT

A. Side Panel L (R)

1) Remove four screws (Sx) fixing side panel L (R) from rear panel side.
2) Remove bonnet and bottom plate.
3) Shift the position of the side panel L (R) 2 cm in the arrow direction (1) and then pull it the arrow direction (2) to remove the side panel L (R). (See Fig. 3-1)

Fig. 3-1

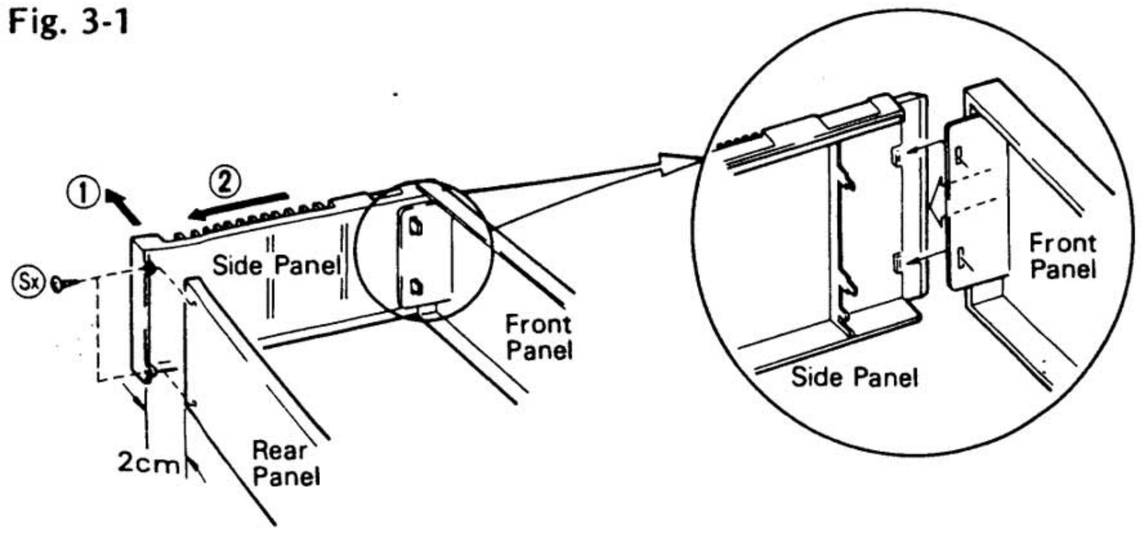

B. Display Stage & Front Panel Ass'y (See Fig. 3-2)

1) Remove four screws (Sx) fixing side panel L (R) from rear panel side. (See Fig. 3-1)
2) Remove bonnet and bottom plate.
3) Remove side panel L and R (See Replacement A)
4) Remove dial pointer clip.
5) Loosen two screws (Sy) fixing motor bracket.
6) Remove circuit board F-3801 and F-3802 from display stage.
7) Loosen a screw (Sz) fixing dial pointer rail.
8) Pull out the dial pointer from dial pointer rail.
9) Remove display holder from front panel ass'y.
10) Take off tuning belt from tuning unit.
11) Remove tuning unit from front panel ass'y.

Fig. 3-2

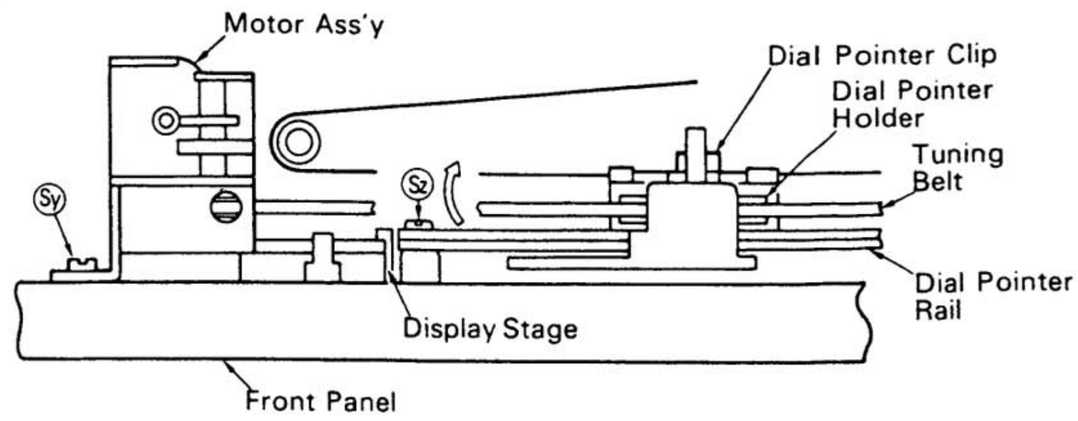

www.hiflengine.com

4. PARTS LOCATION & PARTS LIST

•Since some of capacitors and resistors are omitted from parts lists in this Service Manual, refer to the Common Parts List for capacitors & resistors, which was appended previously to Sansui Manual.

4-1. F-3854 FM/AM RF & RF Ind. Control Circuit Board

(Stock No. 00703501 = T-707/00703505 = T-707L)

Component Side

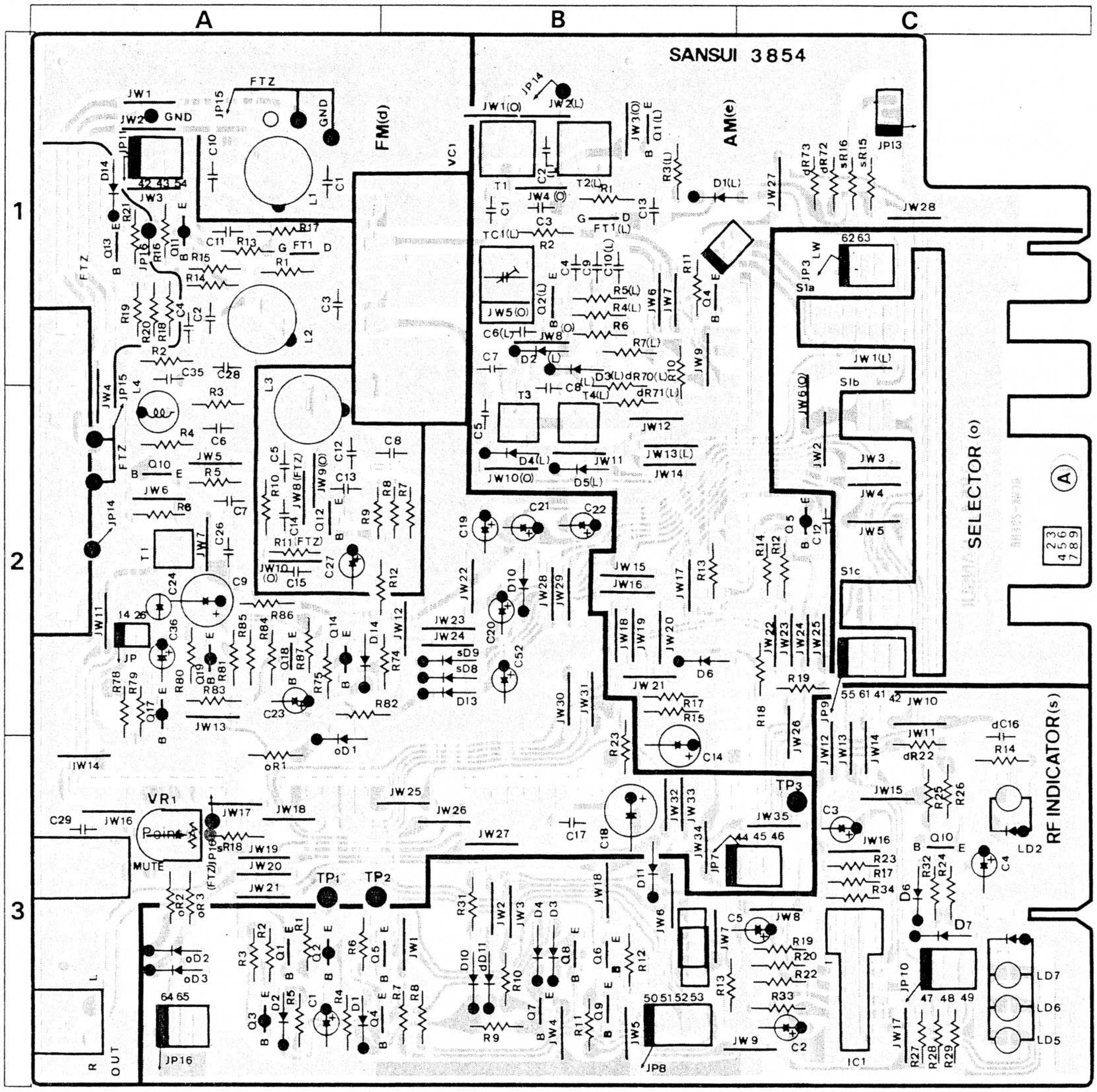

Parts List

Parts No.	Stock No.	Description
•Transistor		
dQ10	46202901	2SC1674
	or 46393201	2SC2786
dQ11	07197001	2SA733A
	or 46392001	2SA1175
	or 07194701	2SA1015
	or 46367201	2SA1048
	or 03012701	2SA999
	or 46367001	2SA1115
dQ12	07273601	2SC1923
	or 46392401	2SC2668
dQ14	46392001	2SA1175
	or 46367001	2SA1115
	or 46367201	2SA1048
dQ15	46391901	2SC2785
	or 46367101	2SC2603
	or 46367301	2SC2458
dQ16	46391901	2SC2785
	or 46367101	2SC2603
	or 46367301	2SC2458

Parts No.	Stock No.	Description
dQ17	46392001	2SA1175
	or 46367001	2SA1115
	or 46367201	2SA1048
dQ18	46391901	2SC2785
	or 46367101	2SC2603
dQ19	46392001	2SA1175
	or 46367001	2SA1115
•FET		
dFT1	46393000	2SK192A-Y
	or 46393001	2SK192A-GR
•Diode		
dD10	03117600	1S2473D
dD11	03117600	1S2473D
dD13	03117600	1S2473D
dD14	03117600	1S2473D
dC24	08451700	1μF 50V E.B.

www.hifiengine.com

Parts List <F-3854>

Parts No.	Stock No.	Description
dVC1	46369700	Variable Capacitor
dL1	42007200	FM RF Coil
dL2	42103400	FM RF Coil
dL3	42204000	FM OSC Coil
dL4	49003000	Inductor 2.2μH
dT1	46369500	FM IF Coil
dVR1	10370700	10kΩ (B) S.V.R., Mute Level Adj.
●Transistor		
eQ1	46118801	2SC2878 <T-707L Only>
eQ2	46118801	2SC2878 <T-707L Only>
eQ4	46391901	2SC2785
	or 46367101	2SC2603
	or 46367301	2SC2458
eQ5	46392001	2SA1175
	or 46367001	2SA1115
	or 46367201	2SA1048
●FET		
eFT1	46393000	2SK192A <T-707L Only>
	or 46393001	2SK192A <T-707L Only>
●Diode		
eD1	03117600	1S2473D <T-707L Only>
eD2	03117600	1S2473D <T-707L Only>
eD3	03117600	1S2473D <T-707L Only>
eD4	03117600	1S2473D <T-707L Only>
eD5	03117600	1S2473D <T-707L Only>
eD6	03117600	1S2473D
eTC1, 2	46370700	Trimmer Capacitor 16pF <T-707L Only>
eT1	46260600	MW RF Coil
eT2	46260700	LW RF Coil <T-707L Only>
eT3	46369300	MW OSC Coil
eT4	46369400	LW OSC Coil <T-707L Only>
●Diode		
oD1	03117600	1S2473D
oD2	03117600	1S2473D
oD3	03117600	1S2473D
oS1	46369000	Push SW., Selector·MUTING <T-707>
	46396600	Push SW., Selector·MUTING <T-707L>

Parts No.	Stock No.	Description
oZ1	46364200	Antenna Terminal Board
oZ2	46363700	2P Output Terminal Board
oZ3	46411800	Mini Jack, COMPU SELECTOR
●Transistor		
sQ1	46391901	2SC2785
sQ2	46392001	2SA1175
sQ3	46392001	2SA1175
sQ4	46367301	2SC2458
	or 46391901	2SC2785
sQ5	46367301	2SC2458
	or 46367101	2SC2603
	or 46391901	2SC2785
sQ6	46367301	2SC2458
	or 46367101	2SC2603
	or 46391901	2SC2785
sQ7	46367301	2SC2458
	or 46367101	2SC2603
	or 46391901	2SC2785
sQ8	46367301	2SC2458
	or 46367101	2SC2603
	or 46391901	2SC2785
sQ9	46367301	2SC2458
	or 46367101	2SC2603
	or 46391901	2SC2785
sQ10	46367301	2SC2458
	or 46367101	2SC2603
	or 46391901	2SC2785
●IC		
sIC1	03611600	LB1416
●Diode		
sD1	03117600	1S2473D
sD2	03117600	1S2473D
sD3	03117600	1S2473D
sD4	03117600	1S2473D
sD6	03117600	1S2473D
sD7	03117600	1S2473D
sD8	03117600	1S2473D
sD9	03117600	1S2473D
sD10	03117600	1S2473D
sD11	03117600	1S2473D
●Light Emitting Diode		
sLD2	46176900	TLS-123 (Red)
sLD5	07250900	TLG-123A (Green)
sLD6	07250900	TLG-123A (Green)
sLD7	07250900	TLG-123A (Green)

4-2. F-3767 FM IF Circuit Board (Stock No. 00700301)

Component Side

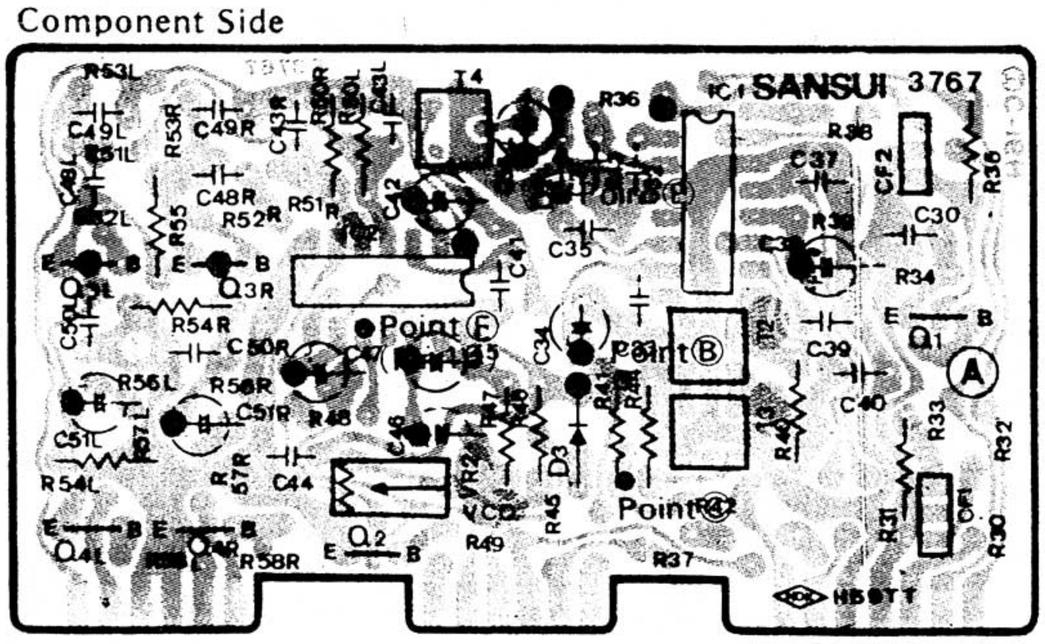

Parts List

Parts No.	Stock No.	Description
●Transistor		
dQ1	46393101	2SC2839
	or 46393201	2SC2786
dQ2	46391901	2SC2785
	or 46367101	2SC2603
	or 46367301	2SC2458
dQ3	46392001	2SA1175
	or 46367001	2SA1115
	or 46367201	2SA1048
dQ4	46391901	2SC2785
	or 46367101	2SC2603
●IC		
dIC1	07191200	LA1231N
dIC2	03603000	HA1156W
●Diode		
dD2	03117600	1S2473D
dD3	03117600	1S2473D
dCF1	09106410	Ceramic Filter 10.7 MHz
dCF2	09106410	Ceramic Filter 10.7 MHz
dT2	46369100	FM Detector Coil
dT3	46369200	FM Detectot Coil
dVR2	07218000	6.8kΩ (B) SV R, VCO adj.

www.hifiengine.com

4-3. F-3746 AM Tuner Circuit Board (Stock No. 00700401)

Component Side

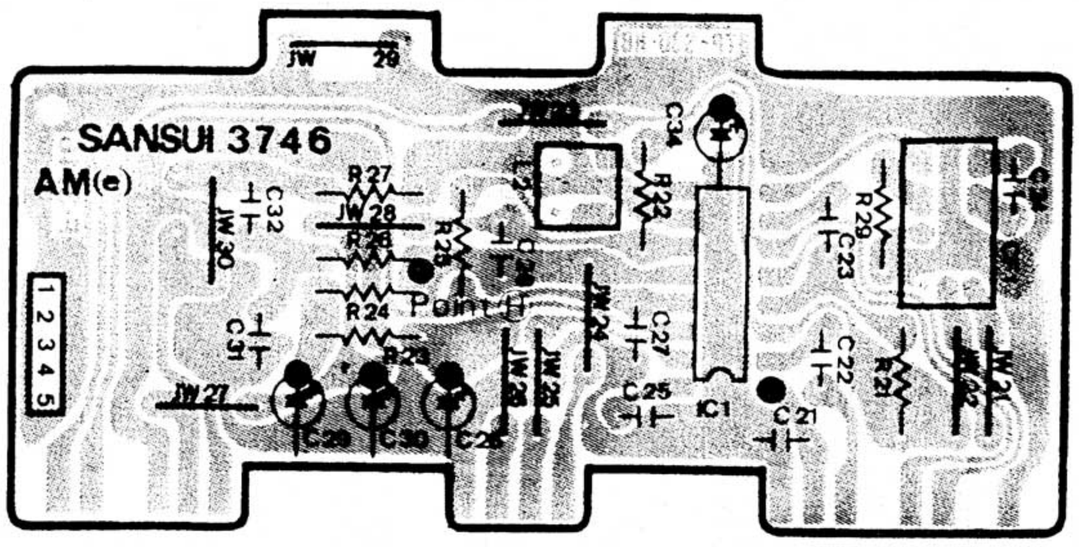

Parts List

Parts No.	Stock No.	Description
•IC		
eIC1	03608000	LA1240
	or 03603900	HA1197
eCF1	07250500	Ceramic Filter 455 kHz
eL2	46369600	AM IF Coil

4-4. F-3800 Automatic Search & Tuning Circuit Board (Stock No. 00703101 = T-707/00703105 = T-707L)

Component Side

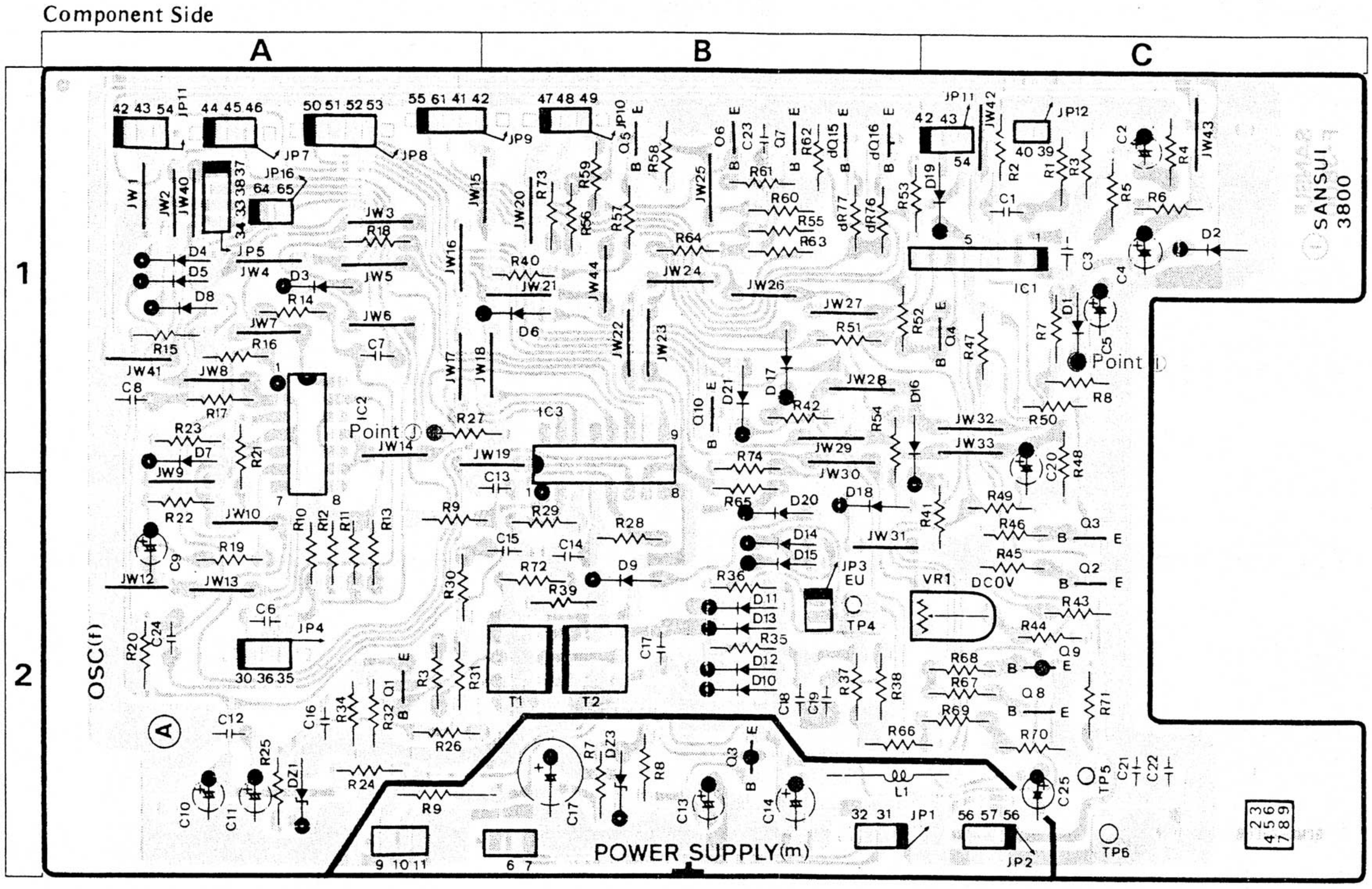

Parts List

Parts No.	Stock No.	Description
•Transistor		
fQ1	46393101	2SC2839
fQ2	46391901	2SC2785
	or 46367101	2SC2603
fQ3	46391901	2SC2785
	or 46367101	2SC2603
fQ4	46391901	2SC2785
	or 46367101	2SC2603
fQ5	46391901	2SC2785
	or 46367101	2SC2603
fQ6	46391901	2SC2785
	or 46367101	2SC2603
fQ7	46391901	2SC2785
	or 46367101	2SC2603
fQ8	46391901	2SC2785
	or 46367101	2SC2603
fQ9	46367001	2SA1115
	or 46392001	2SA1175
•IC		
fIC1	46078900	M5218L
fIC2	03604000	MSM4011RS
	or 03604100	TC4011P
fIC3	03611800	MSM4049RS

Parts No.	Stock No.	Description
•Diode		
fD1	03117600	1S2473D
fD2	03117600	1S2473D
fD3	03117600	1S2473D
fD4	03117600	1S2473D
fD5	03117600	1S2473D
fD6	03117600	1S2473D
fD7	03117600	1S2473D
fD8	03117600	1S2473D
fD9	03117600	1S2473D
fD10	46267200	HP80
fD11	46267200	HP80
•Varistor		
fD14	03401700	MV103 <T-707L Only>
fD15	03401700	MV103 <T-707L Only>
•Diode		
fD16	03117600	1S2473D
fD17	03117600	1S2473D
fD18	03117600	1S2473D
fD19	03117600	1S2473D
fD20	03117600	1S2473D
fD21	03117600	1S2473D

www.hifiengine.com

Parts List <F-3800>

Parts No.	Stock No.	Description
•Zener Diode		
fDZ1	03178200	RD9.1E-B
	or 46112900	05Z9.1-X
	or 46113000	05Z9.1-Y
	or 46113100	05Z9.1-Z
fT1	07250100	AM IF Coil 455 kHz
fT2	07250200	AM IF Coil 455 kHz
fVR1	07241500	50kΩ (B) S.V.R., Auto tune adj.

Parts No.	Stock No.	Description
•Transistor		
mQ3	03034401	2SB527
	or 07260001	2SA935
•Zener Diode		
mDZ3	46114500	05Z15-Y
	or 46114600	05Z15-Z
mR9	00179000	10Ω 1W N.I.R.
mL1	42904600	Peaking Coil

4-5. F-3823 Power Supply Circuit Board (Stock No. 00703401 = T-707/00703405 = T-707L)

Component Side

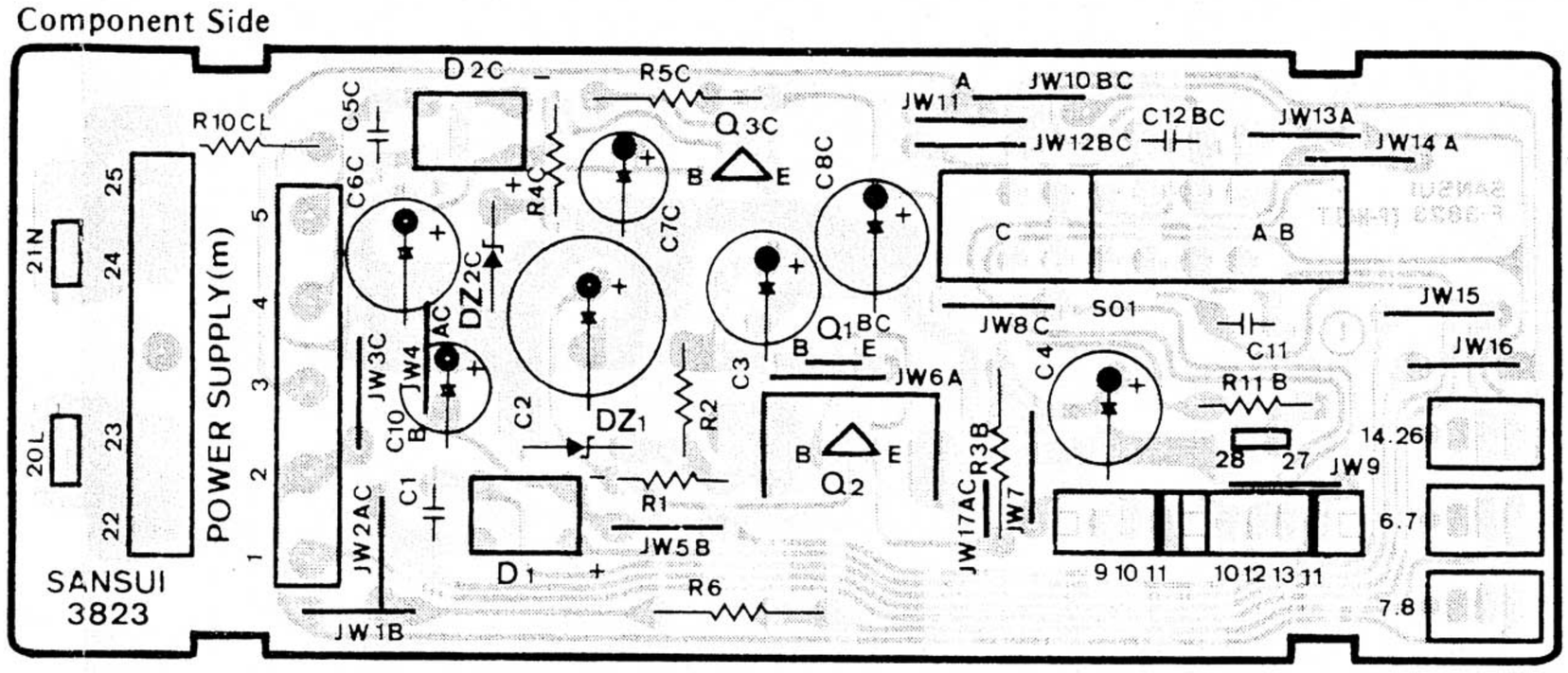

Parts List

Parts No.	Stock No.	Description
•Transistor		
mQ1	03059501	2SC945
	or 03068301	2SC2320
	or 07194801	2SC1815
mQ2	03083901	2SD313
•Diode		
mD1	46273600	DBB10-B
mD2	03117700	10E-2

Parts No.	Stock No.	Description
•Zener Diode		
mDZ1	07180700	RD15E-B
mR6	00190100	47Ω 1W N.I.R.
mR11	46230500	1.8kΩ 1/2W N.I.R.
mS1	46370900	Push SW., Power <T-707L>
	46399900	Push SW., Power <T-707>

• Note: The circuit boards, F-3801, F-3802 & F-3855 are not supplied as the assembled. However, the individual parts on the circuit boards are provided by orders.

4-6. F-3801 Tuning Switch Circuit Board <DOWN>

Component Side

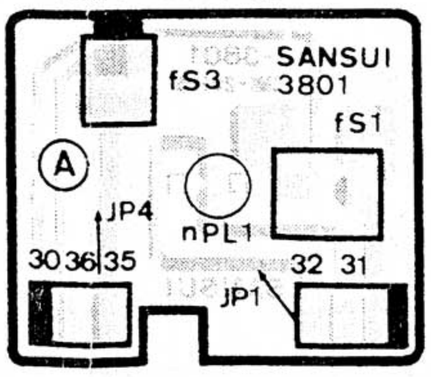

Parts List

Parts No.	Stock No.	Description
fS1	46394200	Push SW.
fS3	46394100	Leaf SW.
sPL1	46315900	Pilot Lamp 12V 150mA

4-7. F-3802 Tuning Switch Circuit Board <UP>

Component Side

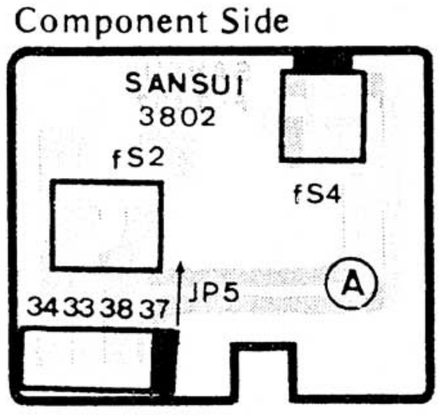

Parts List

Parts No.	Stock No.	Description
fS2	46394200	Push SW.
fS4	46394100	Leaf SW.

www.hifiengine.com

4-8. F-3855 FM/AM Indicator L.E.D. Circuit Board

Component Side

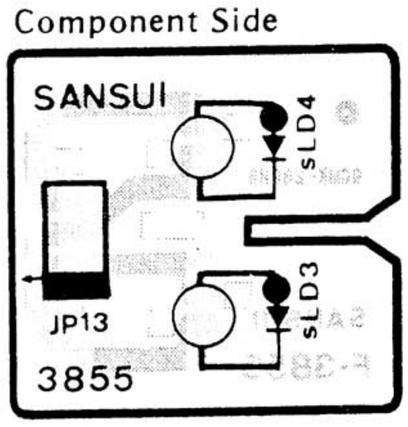

Parts List

Parts No.	Stock No.	Description
●Light Emitting Diode		
sLD1	46321200	L.E.D. Ass'y (Dial Pointer)
sLD3	46176900	TLS-123 (Red)
sLD4	46176900	TLS-123 (Red)

* Concerning Printed Resistor and Printed Silver Pattern

In this model, printed circuit board is used on which carbon resine resistance and silver foil pattern are coated. And it is impossible to replace those parts. Therefore, please keep following procedures when repairing or ordering the parts.

1. When repairing the printed resistor, cut off center portion of the resistor to make complete open circuit. Then solder 1/3 W type carbon resistor to conductor side of the PCB.
2. When repairing the printed silver pattern, solder lead wire to conductor side of the PCB.
3. When ordering the 1/3 W type carbon resistor, read the resistance value from the schematic diagram, and refer to "Common Parts List for Resistors and Capacitors".

●Abbreviations

C.R.	: Carbon Resistor	E.B.	: Bi-Polar Electrolytic Capacitor
S.R.	: Solid Resistor	E.BL.	: Low Leak Bi-Polar Electrolytic Capacitor
Ce.R.	: Cement Resistor	Ta.C.	: Tantalum Capacitor
M.R.	: Metal Film Resistor	F.C.	: Film Capacitor
F.R.	: Fusing Resistor	M.P.	: Metalized Paper Capacitor
N.I.R.	: Non-Inflammable Resistor	P.C.	: Polystyrene Capacitor
C.C.	: Ceramic Capacitor	G.C.	: Gimmic Capacitor
C.T.	: Ceramic Capacitor, Temperature Compensation	V.R.	: Variable Resistor
E.C.	: Electrolytic Capacitor	S.V.R.	: Semi Variable Resistor
E.L.	: Low Leak Electrolytic Capacitor	SW.	: Switch

5. INTERIOR BLOCK DIAGRAM OF IC

● LA1231N (IF & Quadrature Detector)

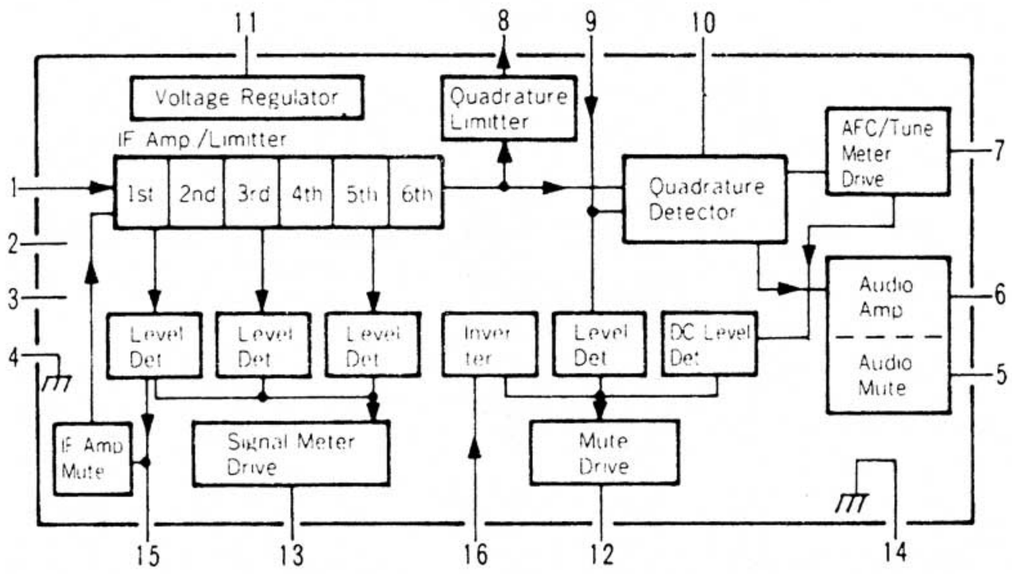

● HA1156 (MPX)

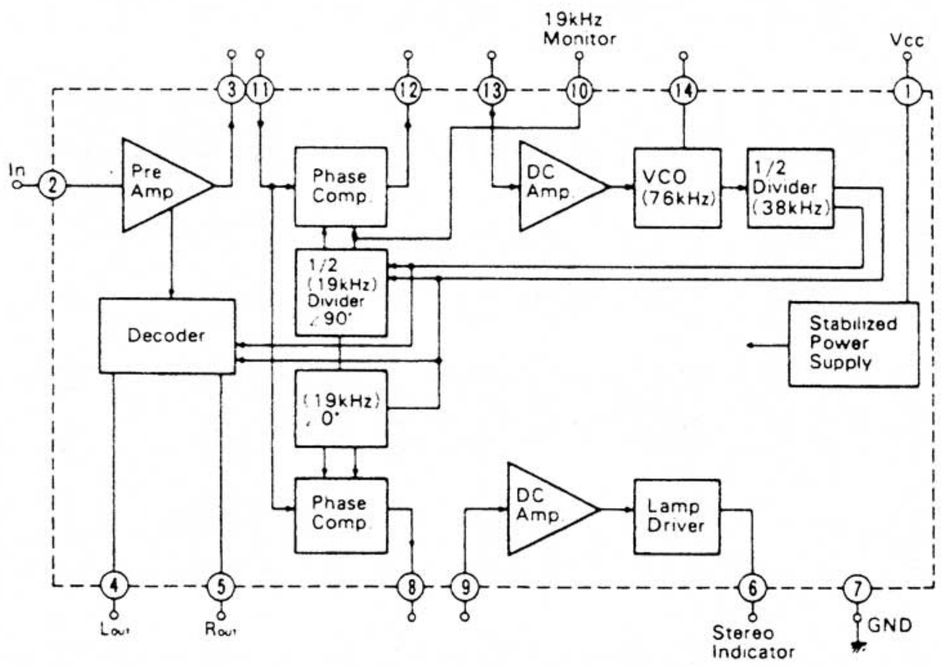

● LA1240 (AM Tuner)

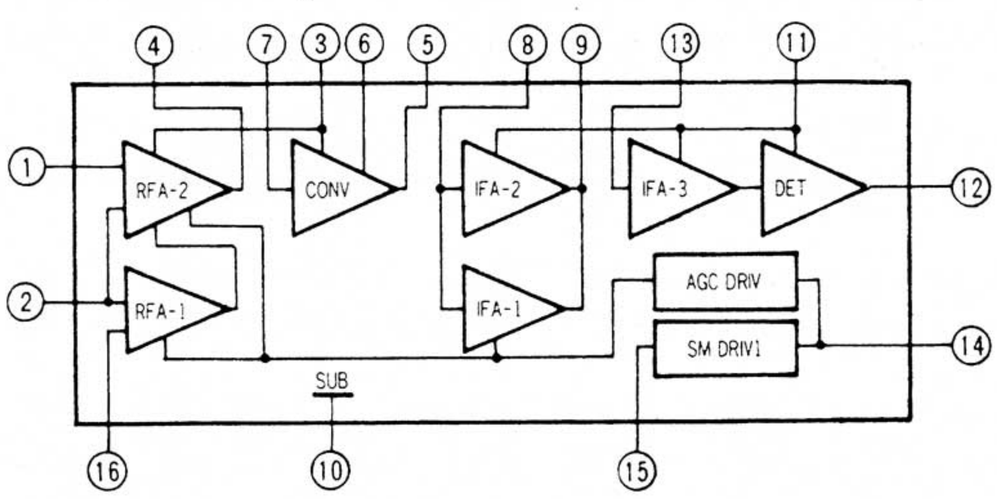

● LB1416 (Signal Indicator Drive)

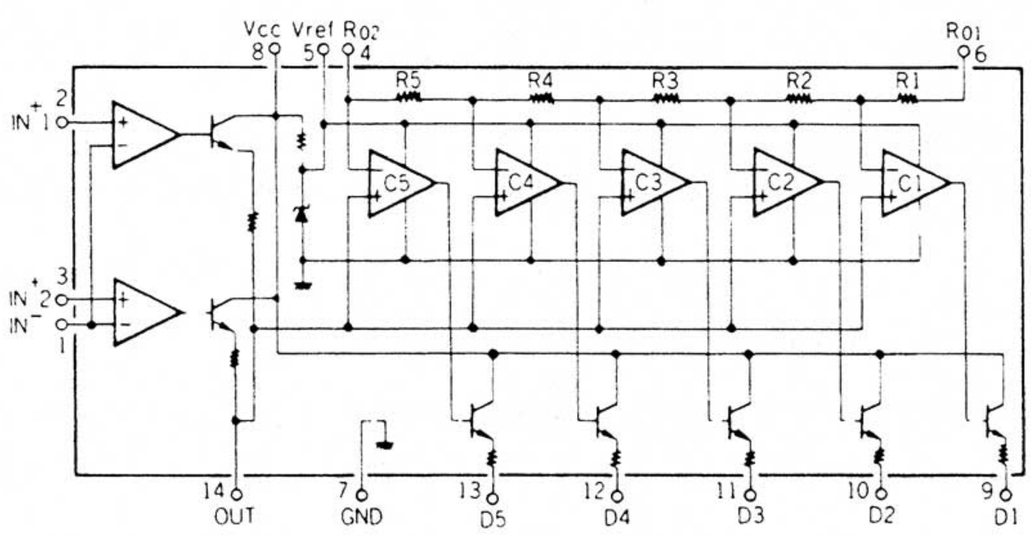

www.hifiengine.com

6. OTHER PARTS

6-1. Front View

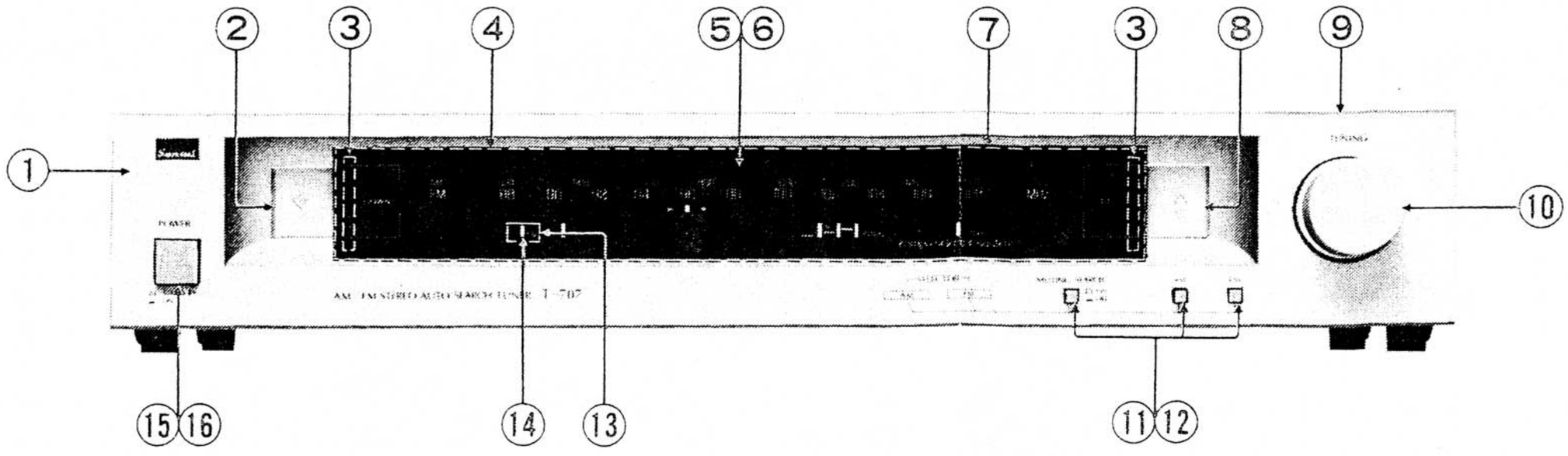

6-2. Top View

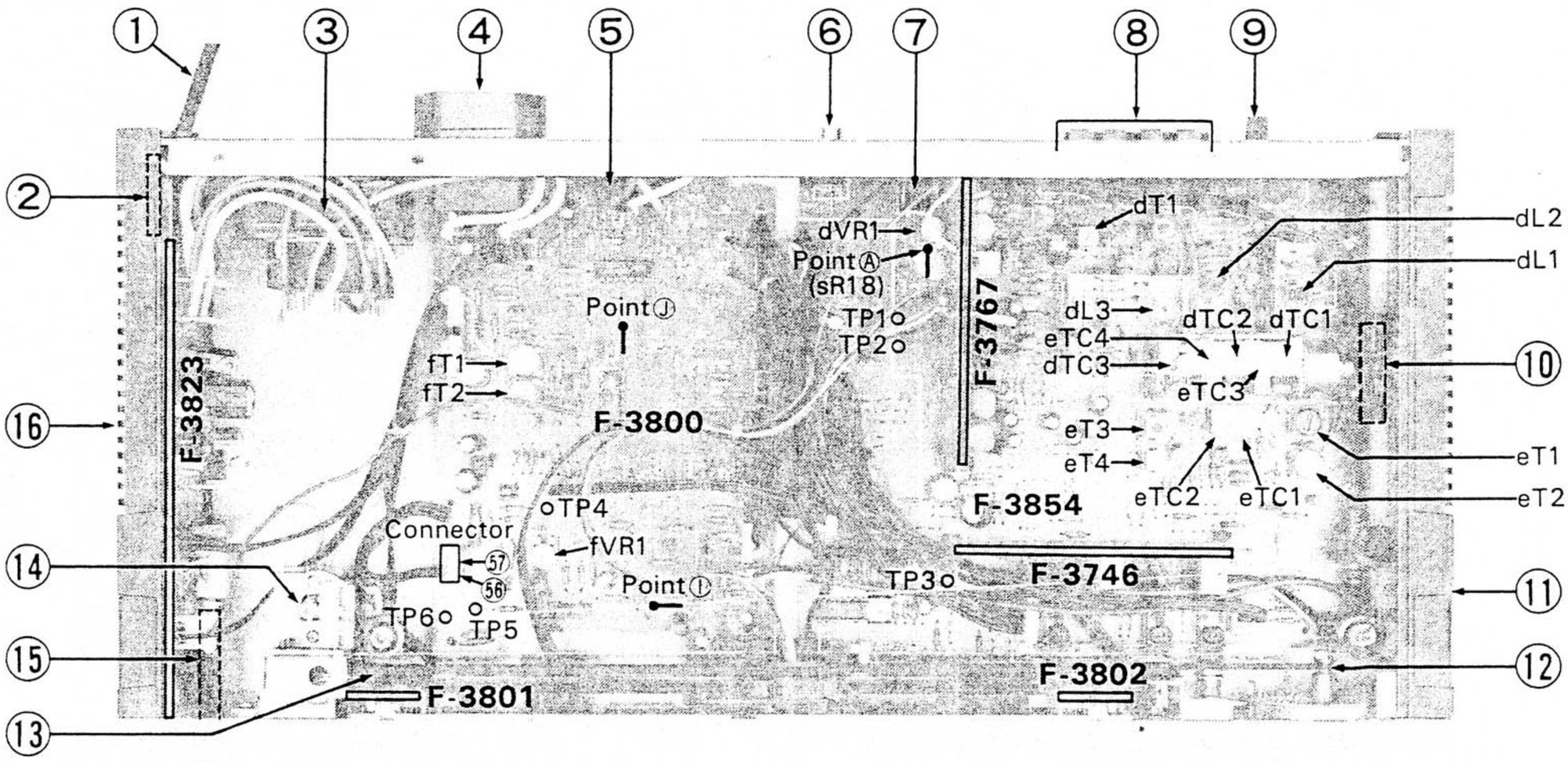

Parts List <Front View>

Parts No.	Stock No.	Description
1	07922300	Front Panel Ass'y <T-707 Silver>
	07922400	Front Panel Ass'y <T-707 Black>
	47012700	Front Panel Ass'y <T-707L Silver>
	47012800	Front Panel Ass'y <T-707L Black>
2	07925400	Push Knob (Auto Search·Down)
3	07962600	Cushion Rubber
4	47011410	Display Holder <Silver Model>
	07919610	Display Holder <Black Model>
5	07943100	Dial Scale <T-707>
	07943400	Dial Scale <T-707L>
6	07953800	Smoked Plate <Silver Model>
	07953700	Smoked Plate <Black Model>
7	47011810	Display Cover
8	07925300	Push Knob (Auto Search·Up)
9	07962200	Bonnet
10	07961600	Tuning Knob <Silver Model>
	07961700	Tuning Knob <Black Model>
11	46369000	Push SW., Selector·MUTING <T-707>
	46396600	Push SW., Selector·MUTING <T-707L>
12	47021000	Push Knob, Selector·MUTING <Silver Model>
	07923200	Push Knob, Selector·MUTING <Black Model>
13	07919410	Dial Pointer Holder
14	46321200	L.E.D. Ass'y (Dial Pointer)
15	46399900	Push SW., Power <T-707>
	46370900	Push SW., Power <T-707L>
16	07971210	Push Knob <Silver Model>
	07911210	Push Knob <Black Model>

Parts List <Top View>

Parts No.	Stock No.	Description
1	38005400	Power Supply Cord <T-707>
	38004500	Power Supply Cord <T-707L>
2	07917700	Power Supply Cord Cover
3	15008801	Power Transformer <T-707>
	15008805	Power Transformer <T-707L>
4	46364900	AC Outlet <T-707>
	46161000	AC Outlet <T-707L>
5	07204700	Slide SW., Voltage Selector (220/240 V T-707L)
6	46363700	2P Output Terminal Board
7	46411800	Mini Jack, COMPU SELECTOR
8	46364200	Antenna Terminal Board
9	22301500	GND Terminal
10	07956300	Pulley
11	07965500	Side Panel (Right)
12	07975300	Tuning Unit
13	46392800	Belt
14	46397100	Motor Unit
15	07963900	Joint Shaft
16	07965400	Side Panel (Left)

www.hifiengine.com

7. SCHEMATIC DIAGRAM 7-1. T-707

* Design and specifications subject to change without notice for improvement.
* La présention et les spécifications sont susceptibles d'étre modifiées sans préavis par suites d'améliorations éventuelles.
* Änderungen, die dem technischen Fortschritt dienen, bleiben vorbehalten.

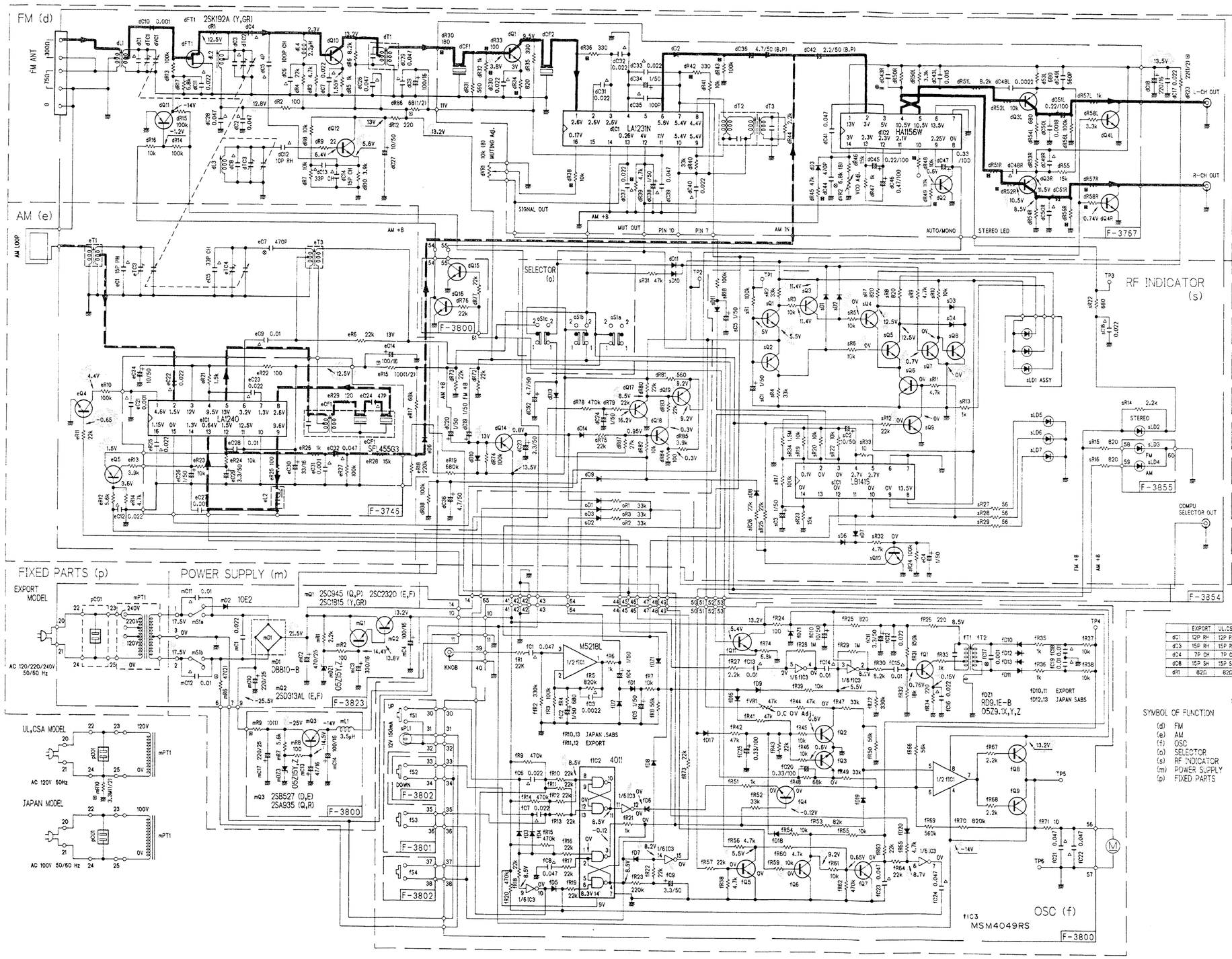

fR10, fR13 Japan Model Only

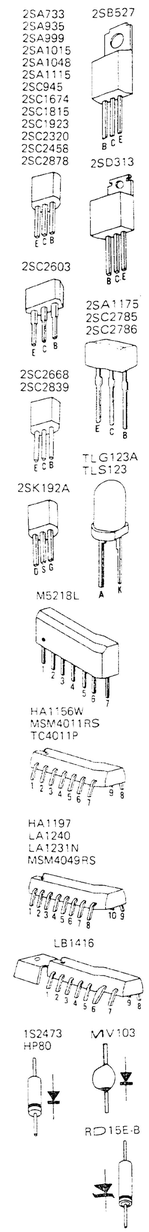

	EXPORT	UL.CSA	EU.BS	SABS	JAPAN
dC1	12P RH	12P RH	12P RH	12P RH	18P RH
dC3	15P RH	15P RH	15P RH	15P RH	22P RH
dC4	7P CH	7P CH	7P CH	7P CH	8P CH
dC8	15P SH	15P SH	15P SH	10P SH	15P UJ
dR1	82Ω	82Ω	82Ω	82Ω	120Ω

FM (d)		
dQ1	2SC2839 (E,F) 2SC674 (L,K)	2SC2786 (L,K)
dQ2,15,16	2SC945 (Q,P) 2SC1815 (Y,GR) 2SC2785 (E,F,J,H) 2SC2458 (Y,GR)	2SC2320 (E,F) 2SC2603 (E,F)
dQ3,11	2SA733A (Q,P)	2SA999 (E,F)
dQ14,17	2SA1015 (Y,GR) 2SA1175 (E,F,J,H) 2SA1048 (Y,GR)	2SA1115 (E,F)
dQ4	2SC945 (Q,P) 2SC2785 (E,F,J,H)	2SC2878 (A,B) 2SC2603 (E,F)
dQ10	2SC2786 (L,K)	2SC1674 (L,K)
dQ12	2SC1923 (O,Y)	2SC2668 (O,Y)
dQ18	2SC945 (Q,P) 2SC2320 (E,F)	2SC2785 (E,F,J,H) 2SC2603 (E,F)
dQ19	2SA733A (Q,P) 2SA999 (E,F)	2SA1175 (E,F,J,H) 2SA1115 (E,F)
dD	ALL 1S2473	
AM (e)		
eQ4	2SC945 (Q,P) 2SC2320 (E,F) 2SC1815 (Y,GR)	2SC2785 (E,F,J,H) 2SC2603 (E,F) 2SC2458 (Y,GR)
eQ5	2SA733A (Q,P) 2SA999 (E,F) 2SA1015 (Y,GR)	2SA1175 (E,F,J,H) 2SA1115 (E,F) 2SA1048 (Y,GR)
eD	ALL 1S2473	
RF INDICATOR (s)		
sQ1	2SC945 (Q,P)	2SC2785 (E,F,J,H)
sQ2,3	2SA733A (Q,P)	2SA1175 (E,F,J,H)
sQ4~9,10	2SC1815 (Y,GR) 2SC2320 (E,F) 2SC945 (Q,P)	2SC2458 (Y,GR) 2SC2603 (E,F) 2SC2785 (E,F,J,H)
sD	ALL 1S2473	
OSC (f)		
fQ1	2SC2839 (E,F)	
fQ2~8,11	2SC945 (Q,P) 2SC2785 (E,F,J,H)	2SC2320 (E,F) 2SC2603 (E,F)
fQ9	2SA999 (E,F) 2SA733 (Q,P)	2SA1115 (E,F) 2SA1175 (E,F,J,H)
fD1~9,fD16~21	1S2473	
fD10~13	HP80	0A90M
SELECTOR (o)		
sD1~3	1S2473	

SWITCHES

oS1a	1 T-707 2 FM
oS1b	1 T-707 2 AM
oS1c	AM,FM MUTE FM AUTO MONO SEARCH 1 T-707 2 ON AUTO 3 OFF MONO

7-2. T-707L

* Design and specifications subject to change without notice for improvement.
* La présention et les spécifications sont susceptibles d'être modifiées sans préavis par suites d'améliorations éventuelles.
* Anderungen, die dem technischen Fortschritt dienen, bleiben vorbehalten.

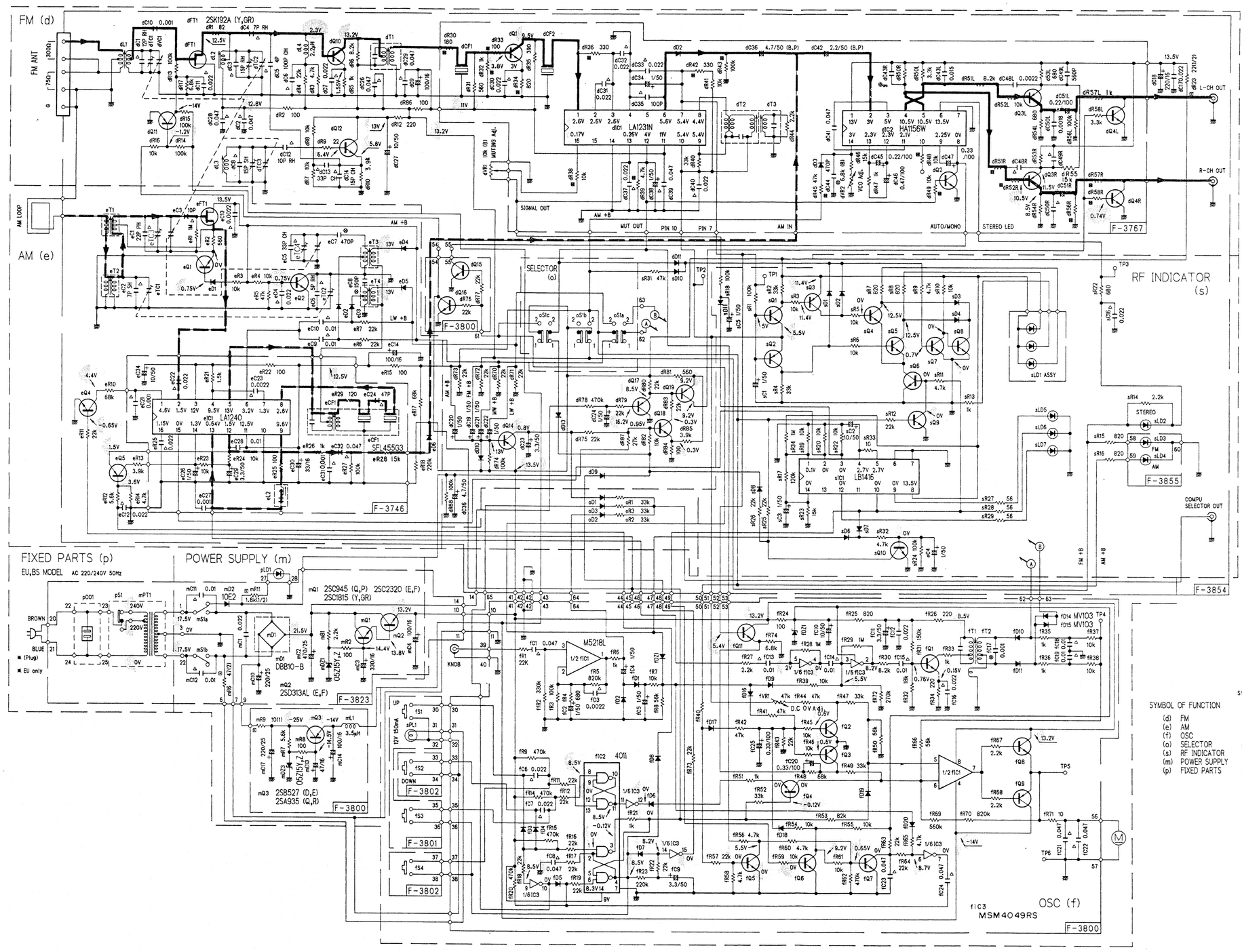

FM (d)		
dQ1,10	2SC2839 (E,F) 2SC1674 (L,K)	2SC2786 (L,K)
dQ2,15,16	2SC945 (Q,P) 2SC1815 (Y,GR) 2SC2785 (E,F,J,H) 2SC2458 (Y,GR)	2SC2320 (E,F) 2SC2603 (E,F)
dQ3,11	2SA733A (Q,P)	2SA999 (E,F)
dQ14,17	2SA1015 (Y,GR) 2SA1175 (E,F,J,H) 2SA1048 (Y,GR)	2SA1115 (E,F)
dQ4	2SC945 (Q,P) 2SC2785 (E,F,J,H)	2SC2878 (A,B) 2SC2603 (E,F)
dQ12	2SC1923 (O,Y)	2SC2668 (O,Y)
dQ18	2SC945 (Q,P) 2SC2320 (E,F)	2SC2785 (E,F,J,H) 2SC2603 (E,F)
dQ19	2SA733A (Q,P) 2SA999 (E,F)	2SA1175 (E,F,J,H) 2SA1115 (E,F)
dD	ALL 1S2473	
AM (e)		
eFT1	2SK192A (Y,GR)	
eQ1,2	2SC2878 (A,B)	
eQ4	2SC945 (Q,P) 2SC2320 (E,F) 2SC1815 (Y,GR)	2SC2785 (E,F,J,H) 2SC2603 (E,F) 2SC2458 (Y,GR)
eQ5	2SA733A (Q,P) 2SA999 (E,F) 2SA1015 (Y,GR)	2SA1175 (E,F,J,H) 2SA1115 (E,F) 2SA1048 (Y,GR)
eD	ALL 1S2473	
RF INDICATOR (s)		
sQ1	2SC945 (Q,P)	2SC2785 (E,F,J,H)
sQ2	2SA733A (Q,P)	2SA1175 (E,F,J,H)
sQ3-10	2SC1815 (Y,GR) 2SC2320 (E,F) 2SC945 (Q,P)	2SC2458 (Y,GR) 2SC2603 (E,F) 2SC2785 (E,F,J,H)
sD	ALL 1S2473	
OSC (f)		
fQ1	2SC2839 (E,F)	
fQ2-8	2SC945 (Q,P) 2SC2785 (E,F,J,H)	2SC2320 (E,F) 2SC2603 (E,F)
fQ9	2SA999 (E,F) 2SA733 (Q,P)	2SA1115 (E,F) 2SA1175 (E,F,J,H)
fD1-9,fD16-21	1S2473	
fD10-11	HP80	
SELECTOR (o)		
oD1-3	1S2473	

SWITCHES

oS1a

	T-707L
1	MW
2	LW

oS1b

	T-707L
1	FM
2	AM

oS1c AM,FM MUTE FM AUTO MOND SEARCH

	T-707L
1	ON AUTO
2	OFF MOND

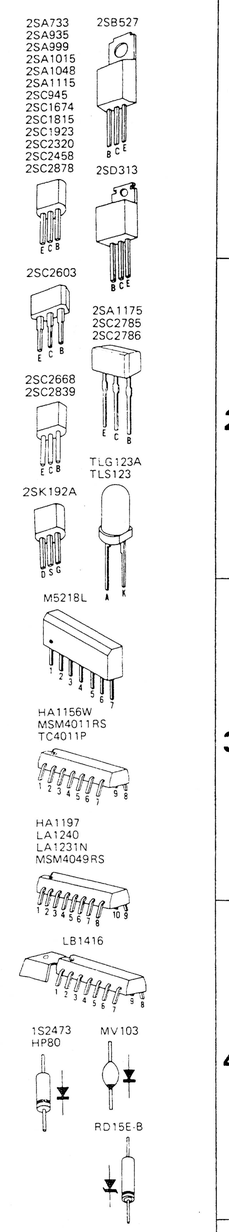

SYMBOL OF FUNCTION

(d) FM
(e) AM
(f) OSC
(o) SELECTOR
(s) RF INDICATOR
(m) POWER SUPPLY
(p) FIXED PARTS

SYMBOL

Ceramic Capacitor
Mylar
Polystyrene
Non-Inflammable Resistor
Printed Resistor

RESISTORS
Are in ohms, 1/4 Watts, ±5% Tolerance
Unless Otherwise Noted. K:KΩ, M:MΩ

CAPACITORS
Are in μF, Unless Otherwise Noted. P:pF

TOLERANCE
J:±5% G:±2% F:±1%

Each D.C Voltage shows the nominal value in volts at no input signal.

Electrolytic Capacitor:Capacitance (μF)/Volt (V)

FM Signal Line

MW · LW Signal Line

8. THREADING OF DIAL CORD

- If a dial cord is cut off slips, replace it by following procedures. As this unit uses 0.5 mmφ cord, please replace it with the same type certainly.

8-1. Threading of Dial Cord

Thread the dial cord in numerical order from ① to ⑩ as Fig. 8-1.

- Close the variable capacitor completely.

* Dial Cord (0.5 mmφ) . . . . . (Stock No. 60360530)

Fig. 8-1

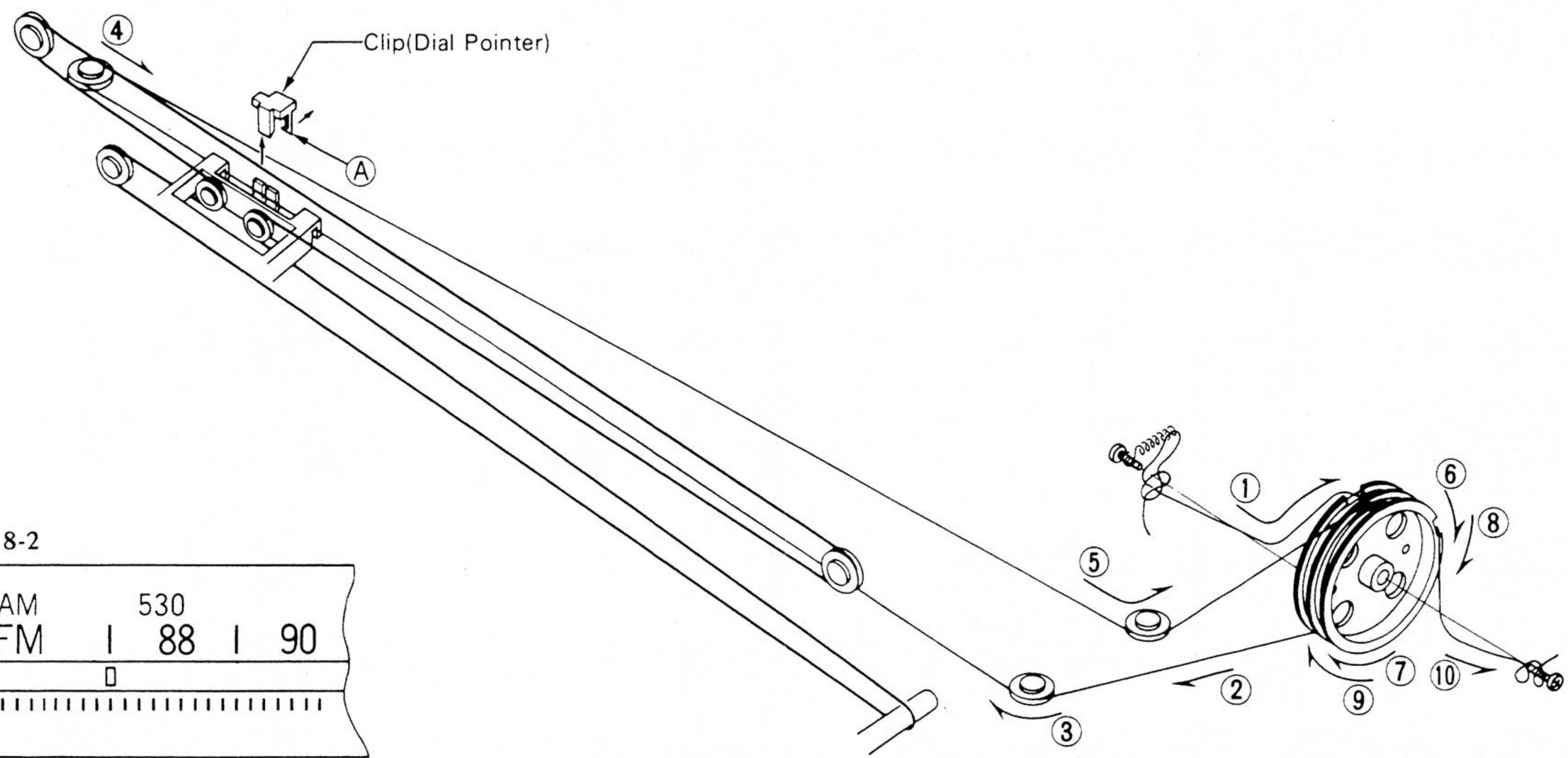

Fig. 8-2

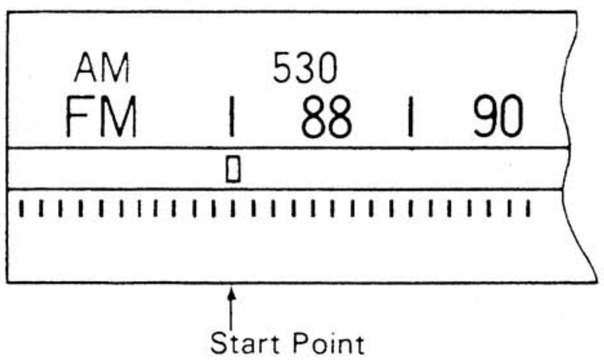

8-2. Attachment of Dial Pointer

1. Close the variable capacitor completely.
2. Set the dial pointer to the start point, the line at the left end of the dial scale. (Fig. 8-2)

* Confirm that the dial pointer runs smoothly on the dial scale by turning the tuning shaft.

Parts List

Parts No.	Stock No.	Description
1	07654700	Wire Holder
2	07654810	Dial Pointer Holder
3	07654600	Clip, dial pointer holder

Fig. 8-3

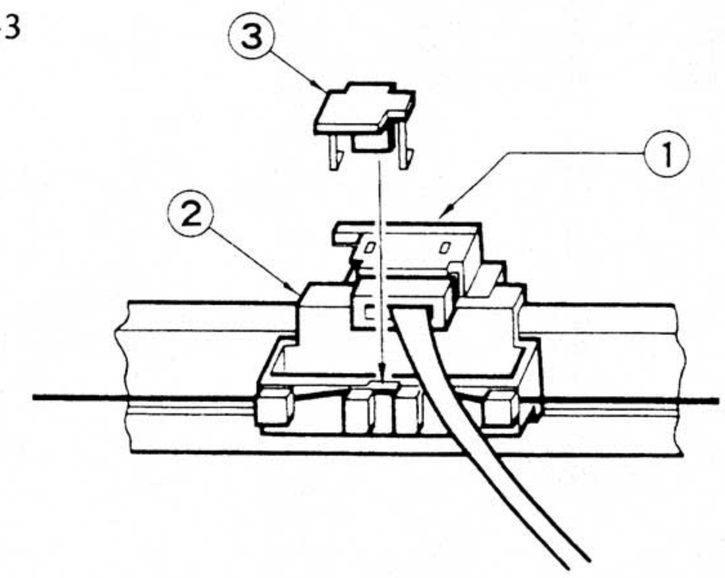

www.hifiengine.com

9. PACKING LIST

Parts No.	Stock No.	Description
1	07599500	Vinyl Cover
2	07965300	Styrofoam Packing
3	07975400	Carton Case <T-707 Silver Model>
	07975500	Carton Case <T-707 Black Model>
	07975700	Carton Case <T-707L Silver Model>
	07975800	Carton Case <T-707L Black Model>

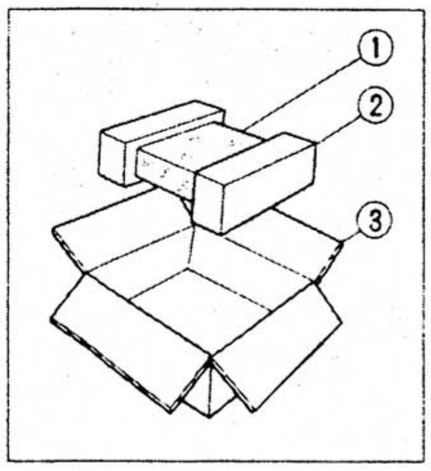

10. ACCESSORY LIST

Stock No.	Description
46355800	Operating Instruction (T-707)
46355900	Operating Instruction (T-707L)
46051700	FM Antenna
46145700	AM Loop Antenna
07563000	Antenna Holder
38103200	PJP Card
46267300	Mini Plug Cord

Sansui

SANSUI ELECTRIC CO., LTD.: 14-1, Izumi 2-chome, Suginami-ku, Tokyo 168 Japan
PHONE: (03) 324-8891/TELEX: 232-2076 (International Division)

SANSUI ELECTRONICS CORPORATION: 1250 Valley Brook Ave. Lyndhurst, N.J. 07071 U.S.A.
333 West Alondra Blvd. Gardena, California 90247 U.S.A.
3036 Koapaka St. Honolulu, Hawaii 96819 U.S.A.

SANSUI ELECTRONICS (U.K.) LTD.: Unit 10A, Lyon Industrial Estate, Rockware Avenue, Greenford, Middx UB6, OAA, England

SANSUI ELECTRONICS G.M.B.H.: Paul Ehrlich Strasse 8, 6074 Rödermark 2, West Germany

(SM1-71) Printed in Japan (O20030M) <Stock No. 36473200>

www.hifiengine.com