SANSUI TR-707E SCHEMATIC DIAGRAM
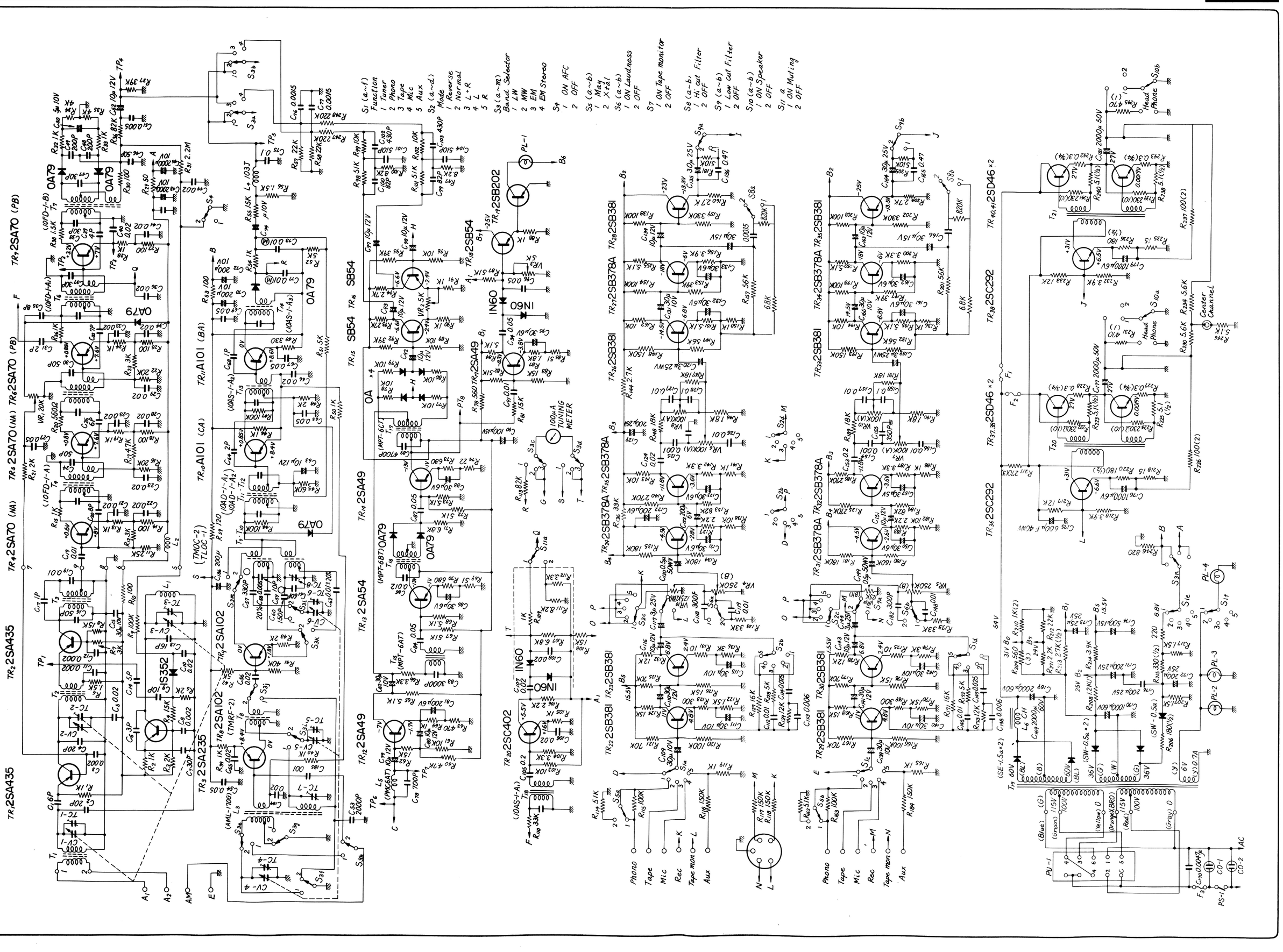
Sansui