# SERVICE MANUAL

## DIGITAL SYNTHESIZER TUNER

# SANSUI TU-D33X
# TU-D33XL

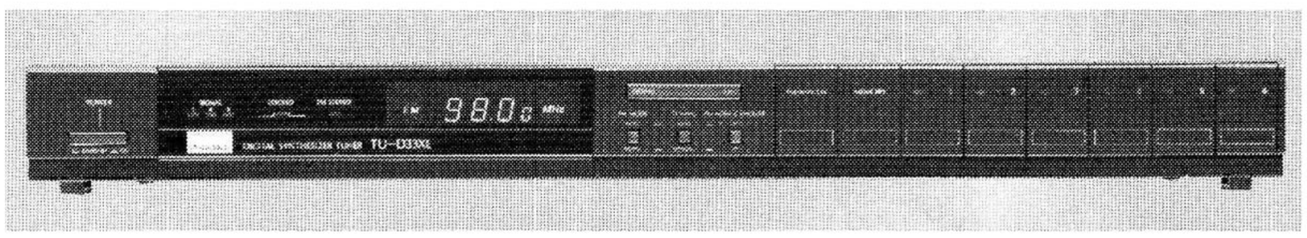

## CAUTION

1. Parts identified by the ⚠ symbol on the schematic diagram and the parts list are critical for safety. Use only replacement parts that have critical characteristics recommended by the manufacturer.
2. Make leakage-current or resistance measurements to determine that exposed parts are acceptably insulated from the supply circuit before returning the appliance to the customer.

Sansui

SANSUI ELECTRIC CO., LTD.



## •SPECIFICATIONS

### TU-D33X

**FM Section**

**Tuning range** ..... 88 to 108 MHz
**Usable sensitivity**
Mono IHF ..... 10.8 dBf (1.9 μV : T100)
DIN ..... 0.95 μV
**50 dB quieting sensitivity**
Mono ..... 16.0 dBf
Stereo ..... 36.0 dBf
**Signal to noise ratio at 65 dBf**
Mono ..... 78 dB
Stereo ..... 72 dB
**Distortion at 65 dBf**
Mono ..... less than 0.08% at 1,000 Hz
Stereo ..... less than 0.12% at 1,000 Hz
**Alternate channel selectivity (at 400 kHz)**
..... 60 dB
**Capture ratio** ..... 1.0 dB
**Image response ratio** ..... 45 dB
**Spurious response ratio** ..... 75 dB
**Stereo separation** ..... 40 dB at 1,000 Hz
**Frequency response**
Stereo ..... 30 to 15,000 Hz, +0.3 dB, —0.8 dB
**Antenna input impedance** ..... 300 ohms balanced
75 ohms unbalanced

**AM Section**

**Tuning range** ..... 530 to 1,600 kHz
**Usable sensitivity** ..... 50 dB/m (316 μV/m)
**Signal to noise ratio** ..... 50 dB
**Image response ratio** ..... 45 dB at 1,000 kHz

**Others**

**Output voltage and impedance**
..... 775 mV/2.2 kohms
**Power requirements** ..... 120/220/240V, 50/60 Hz
For U.S.A. and Canada .... 120V (60 Hz)
**Power consumption** ..... 9 watts
**Dimensions** ..... 430 mm (16-15/16″)W
46 mm (1-13/16″)H
227 mm (8-15/16″)D
**Weight** ..... 2.3 kg (5.1 lbs) net
2.9 kg (6.4 lbs) packed

### TU-D33XL

**FM Section**

**Tuning range** ..... 88 to 108 MHz
**Usable sensitivity**
Mono IHF ..... 10.8 dBf (1.9 μV : T100)
DIN ..... 0.95 μV
**50 dB quieting sensitivity**
Mono ..... 16.0 dBf
Stereo ..... 36.0 dBf
**Signal to noise ratio at 65 dBf**
Mono ..... 78 dB
Stereo ..... 72 dB
**Distortion at 65 dBf**
Mono ..... less than 0.08% at 1,000 Hz
Stereo ..... less than 0.12% at 1,000 Hz
**Alternate channel selectivity (at 400 kHz)**
..... 60 dB
**Capture ratio** ..... 1.0 dB
**Image response ratio** ..... 45 dB
**Spurious response ratio** ..... 75 dB
**Stereo separation** ..... 40 dB at 1,000 Hz
**Frequency response**
Stereo ..... 30 to 15,000 Hz, +0.3 dB, —0.8 dB
**Antenna input impedance** ..... 300 ohms balanced
75 ohms unbalanced

**AM (MW, LW) Section**

**Tuning range** ..... MW: 530 to 1,600 kHz
LW: 153 to 360 kHz
**Usable sensitivity** ..... MW: 50 dB/m (316 μV/m)
LW: 60 dB/m at 250 kHz
**Signal to noise ratio (MW)** .... 50 dB
**Image response ratio (MW)** ... 45 dB at 1,000 kHz

**Others**

**Output voltage and impedance**
..... 775 mV/2.2 kohms
**Power requirements** ..... 220/240V, 50/60 Hz
**Power consumption** ..... 9 watts
**Dimensions** ..... 430 mm (16-15/16″)W
46 mm (1-13/16″)H
227 mm (8-15/16″)D
**Weight** ..... 2.3 kg (5.1 lbs) net
2.9 kg (6.4 lbs) packed

* **Design and specifications subject to changes without notice for improvements.**
* **In order to simplify the explanation illustrations may sometimes differ from the originals.**

www.hifiengine.com

# CAUTION

1. The symbols, UL, CSA, SA, BS, UK, EU, AS and XX on the parts list and the schematic diagram mean followings respectively.

| | |
|---|---|
| UL..... | Manufactured for U.S.A market. (Underwriters Laboratories approved model.) |
| CSA..... | Manufactured for Canadian market. |
| SA..... | Manufactured for South African market. |
| BS, UK ..... | Manufactured for United Kingdom market. |
| EU ..... | Manufactured for European market. |
| AS..... | Manufactured for Australian market. |
| XX..... | Standard Version. |
| NON MARK ..... | Common Parts. |

2. Some printed circuit boards are not supplied as the assembled. To separate these in this service manual, the stock No's are not indicated at the ends of the board names. However, the individual parts on the circuit boards are provided by orders.

3. Since some of capacitors and resistors are omitted from parts lists in this service manual, refer to the Common Parts List for capacitors & resistors, which was issued on February 1983.

4. Abbreviations in this service manual are as follows.

•Abbreviations List

| | | | |
|---|---|---|---|
| C.R. | : Carbon Resistor | E.B.L. | : Low Leak Bi-Polar Electrolytic Capacitor |
| S.R. | : Solid Resistor | Ta.C. | : Tantalum Capacitor |
| Ce.R. | : Cement Resistor | F.C. | : Film Capacitor |
| M.R. | : Metal Film Resistor | M.P. | : Metalized Paper Capacitor |
| F.R. | : Fusing Resistor | P.C. | : Polystyrene Capacitor |
| N.I.R. | : Non-Inflammable Resistor | G.C. | : Gimmic Capacitor |
| A.R. | : Array Resistor | A.C. | : Array Capacitor |
| C.C. | : Ceramic Capacitor | V.R. | : Variable Resistor |
| C.T. | : Ceramic Capacitor, Temperature Compensation | S.V.R. | : Semi Variable Resistor |
| E.C. | : Electrolytic Capacitor | SW. | : Switch |
| E.L. | : Low Leak Electrolytic Capacitor | Chip R. | : Chip Resistor |
| E.B. | : Bi-Polar Electrolytic Capacitor | Chip C. | : Chip Capacitor |



www.hifiengine.com

# 1. BLOCK DIAGRAM

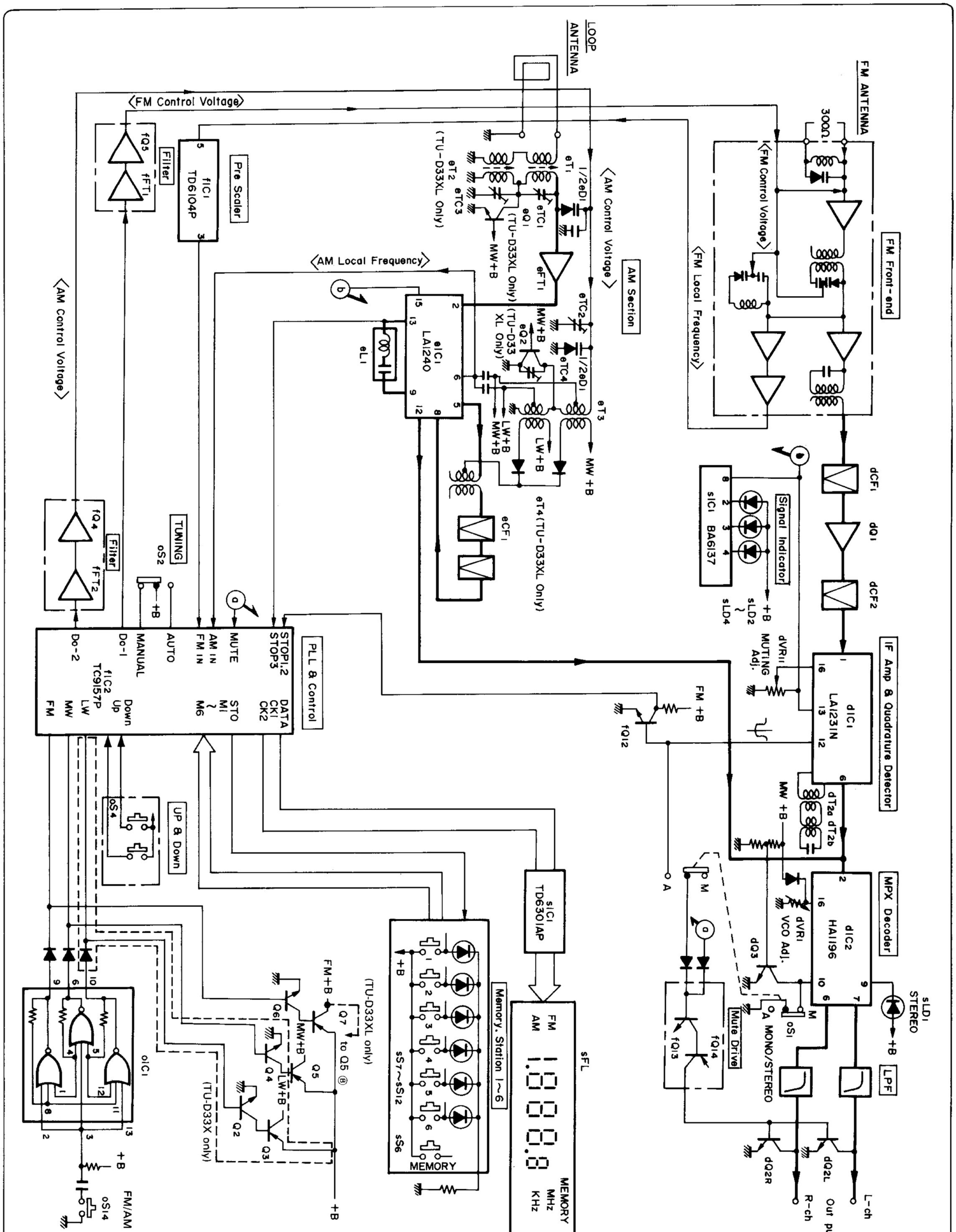




www.hifiengine.com

# 2. ADJUSTMENTS

## 2-1. FM Adjustment (See Top View on Page 11)

### 1) FM IF & Reference Frequency Adjustment (See Parts Location on page 6, 7)

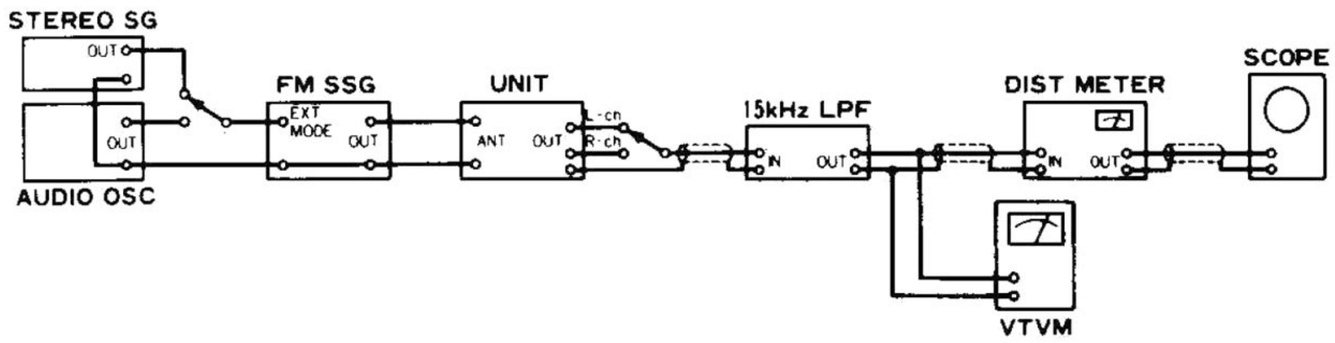


**Note:** 1. SELECTOR..... FM 2. FM MUTING/MODE..... OFF/MONO

| STEP | SUBJECT | | FEED SIGNAL FROM | FEED SIGNAL TO | MEASURE OUTPUT | ADJUST | ADJUST FOR | REMARKS |
|---|---|---|---|---|---|---|---|---|
| 1. | IF Coil Adj. | | 98MHz ANT Input 20dBf (14.8dB), 1kHz (100% MOD.), FM SSG | ANT termianl 300Ω | Between Point Ⓐ (dVR11, F-4600) & Earth DC Volt Meter | IFT Coil (Front-end) | Max. DC Volt | |
| 2. | Discriminator Coil Adj. In case of using Genescope | 1 | No Input | —— | Between Test Point Ⓑ & Point Ⓒ (F-4600) DC Volt Meter | dT1 (F-4658) | DC 0V ± 30mV | •Repeat procedures as stated in subject 1 & 2. |
| | | 2 | Output 60dB, Genescope | Point Ⓓ (JW51) | Between Point Ⓔ (JW13 or 2 & Earth) | dT2 (F-4658) | Steep linearity of S curve. Make symmetrical S curve. | |
| | Discriminator Coil Adj. In case of using Dist meter | 1 | No Input | —— | Between Test Point Ⓑ & Point Ⓒ (F-4600) DC Volt Meter | dT1 (F-4658) | DC 0V ± 30mV | •Repeat procedures as stated in subject 1 & 2. |
| | | 2 | 98MHz ANT Input 65dBf (59.8dB), 1kHz (100% MOD.), FM SSG | ANT terminal 300Ω | •Output Terminal VTVM/SCOPE & Dist Meter | dT2 (F-4658) | Min. THD | |

### •ADJUSTMENT FOR FM

There are two kind in indication of FM SSG output attenuator
1. Attenuator with marking of 75Ω open ..... open indication type.
2. Attenuator with marking of 75Ω load or close ..... load or close indication type.

FM SG output level in this FM adjustment are described as open indication type.
To feed FM signal, a dummy antenna circuit as Fig. 2-1 must be connected between FM SG output and ANT terminal (300Ω) of the unit.

**Fig. 2-1**

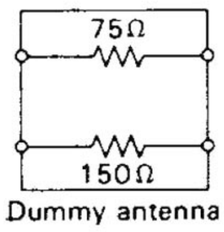

Dummy antenna

- The following table shows relations among FM SG attenuator indication (dB), available power ratio (dBf) and antenna terminal voltage (dB/μV) in each indication type.

| | FM SG Attenuator Indication | Available Power Ratio | Antenna Terminal Voltage |
|---|---|---|---|
| Open indication type | 0 dB<br>66 dB | −0.8 dBf<br>65.2 dBf | −6 dB/μV<br>60 dB/μV |
| Load or close indication type | 0 dB<br>60 dB | 5.2 dBf<br>65.2 dBf | 0 dB/μV<br>60 dB/μV |

### 2) FM STEREO Adjustment

1. SELECTOR..... FM 2. FM MUTING/MODE..... AUTO

| STEP | SUBJECT | FEED SIGNAL FROM | FEED SIGNAL TO | MEASURE OUTPUT | ADJUST | ADJUST FOR | REMARKS |
|---|---|---|---|---|---|---|---|
| 1. | PLL VCO Adj. | 98MHz ANT Input 65dBf (59.8dB), FM SSG, Pilot 19kHz (9% MOD.), R or L MODE 1kHz + Pilot (100% MOD.), STEREO SG | ANT termianl 300Ω | Stereo Indicator | dVR1 (F-4659) | Light indicator | Adjust the dVR1 within center of light level |
| | PLL VCO Adj. In case of using Freq. | 98MHz ANT Input 65dBf (59.8dB), FM SSG, No MOD. | Same as above | Between Point Ⓕ (Pin 9 of dIC2) & Earth Freq. Counter | dVR1 (F-4659) | 19kHz ± 50Hz | |
| 2. | Muting level Adj. | 98MHz ANT Input 22dBf (16.8dB), FM SSG, Pilot 19kHz (9% MOD.), L or R MODE 1kHz + Pilot (100% MOD.) STEREO SG. | Same as above | Stereo indicator OUTPUT L-CH or R-CH, VTVM & SCOPE | dVR11 (F-4600) | Stereo indicator turns ON or Output Signal comes out | |



www.hifiengine.com

## 2-2. AM Adjustment (See Top View on Page 11)

### 1) AM IF Adjustment & MW (AM) Tuning Adjustment

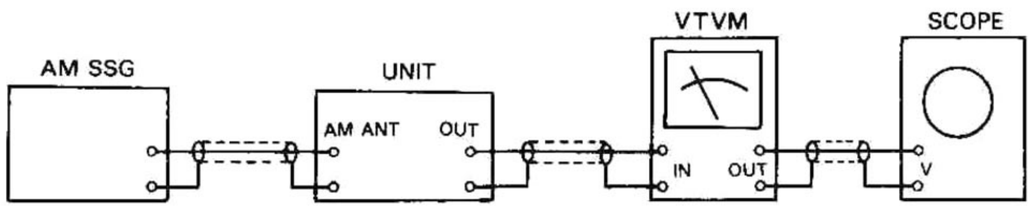


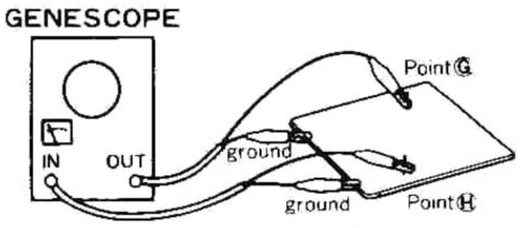


**Note:** 1) SELECTOR..... AM (TU-D33X)/MW (TU-D33XL) 2) Connect AM loop antenna to AM antenna terminal.

| STEP | SUBJECT | FEED SIGNAL | | MEASURE OUTPUT | ADJUST | ADJUST FOR | REMARKS |
|---|---|---|---|---|---|---|---|
| | | FROM | TO | | | | |
| 1. | IF Coil Adj. | Genescope Output 0dB | Point Ⓖ (JW4 or 21) (F-4600) | Between Point Ⓗ (eC26, F-4657) & Earth | eT5, eL1 (F-4657) | Max, Waveform | •Before this adjustment, remove the F-4659 circuit board. Refer to "how to remove it" on page 4. |
| 2. | 522kHz (9kHz step) or 520kHz (10kHz step) Tuning Adj. | No Input | ——— | Between Point Ⓘ (eR2, F-4600) & Earth DC Volt Meter | eT3 (F-4600) | 1V ± 0.1V | •Repeat procedures as stated in subject 2 & 3. |
| 3. | 1610kHz (10kHz step) or 1611kHz (9kHz step) Tuning Adj. | No Input | ——— | Same as above | eTC2 (F-4600) | 8V ± 0.1V | |
| 4. | 603kHz (9kHz step) or 600kHz (10kHz step) RF Adj. | 603kHz (or 600kHz) ANT Input 30dB 400Hz (30% MOD.), AM SSG | ANT terminal | Output Terminal L-CH or R-CH VTVM & SCOPE | eT1 (F-4600) | Max. Output | 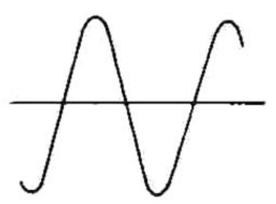 |
| 5. | 1404kHz (9kHz step) or 1400kHz (10kHz step) RF Adj. | 1404kHz (or 1400kHz) ANT Input 30dB 400Hz (30% MOD.), AM SSG | Same as above | Same as above | eTC1 (F-4600) | Max. Output | |

### 2) LW Tuning Adjustment (TU-D33XL only)

**Note:** SELECTOR..... LW

| STEP | SUBJECT | FEED SIGNAL | | MEASURE OUTPUT | ADJUST | ADJUST FOR | REMARKS |
|---|---|---|---|---|---|---|---|
| | | FROM | TO | | | | |
| 1. | 153kHz Tuning Adj. | No Input | ——— | Between Point Ⓘ (eR2, F-4600) & Earth DC Volt Meter | eT4 (F-4600) | 1V ± 0.1V | •Repeat procedures as stated in subject 1 & 2. |
| 2. | 360kHz Tuning Adj. | No Input | ——— | Same as above | eTC4 (F-4600) | 8V ± 0.1V | |
| 3. | 170kHz RF Adj. | 170kHz ANT Input 30dB 400Hz (30% MOD.), AM SSG | ANT terminal | Output Terminal L-CH or R-CH VTVM & SCOPE | eT2 (F-4600) | Max. Output | 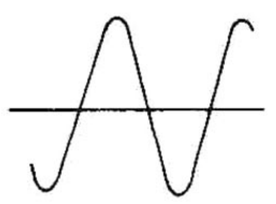 |
| 4. | 300kHz RF Adj. | 300kHz ANT Input 30dB 400Hz (30% MOD.), AM SSG | Same as above | Same as above | eTC3 (F-4600) | Max. Output | |

# 3. HOW TO REMOVE F-4659 CIRCUIT BOARD

1) Remove bonnet and bottom plate.
2) Remove tension wire.
3) Unsolder the F-4659 circuit board connection points.
4) Pull the F-4659 circuit board holder into the arrow direction ①.
5) Pull the circuit board into the arrow direction ②.
6) Pull out the circuit board into the arrow direction ③.

**Fig. 3-1**

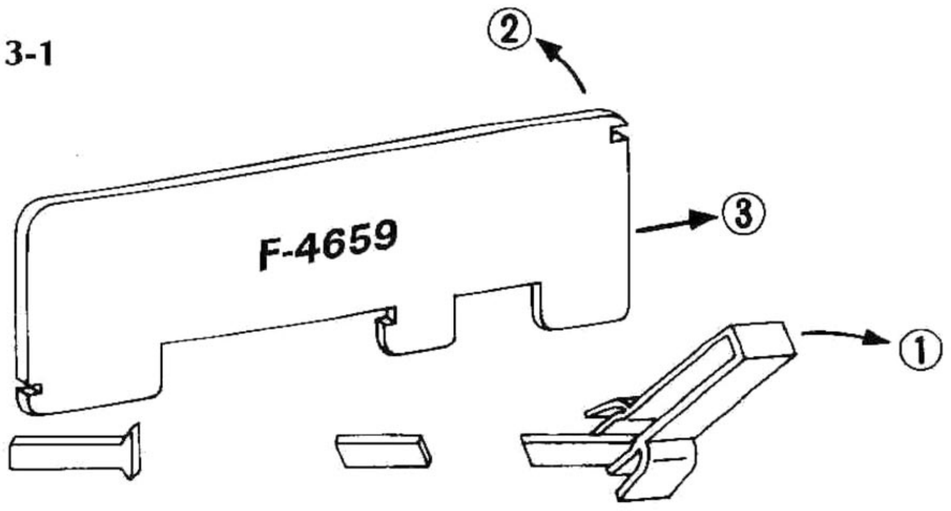


www.hifiengine.com

# 4. PARTS LOCATION & PARTS LIST

## 4-1. F-4601 Preset Memory Circuit Board

**Component Side**

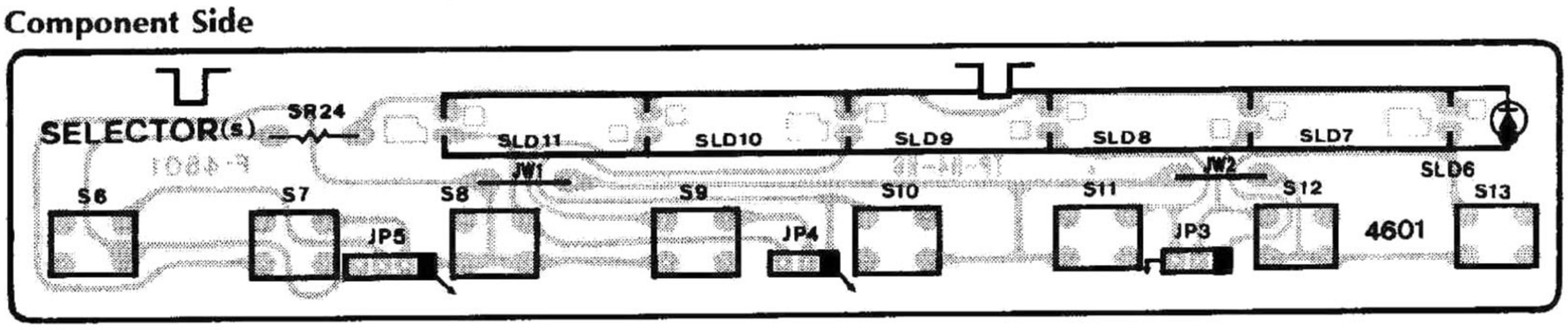


**Parts List**

| Parts No. | Stock No. | Description |
|---|---|---|
| oS6 | 46708100 | Push SW., MEMORY |
| oS7 | 46708100 | Push SW., 1 |
| oS8 | 46708100 | Push SW., 2 |
| oS9 | 46708100 | Push SW., 3 |
| oS10 | 46708100 | Push SW., 4 |
| oS11 | 46708100 | Push SW., 5 |
| oS12 | 46708100 | Push SW., 6 |
| oS13 | 46708100 | Push SW., FM/AM |

## 4-2. F-4602 SIGNAL, LOCKED & STEREO Indicator Board

**Component Side**

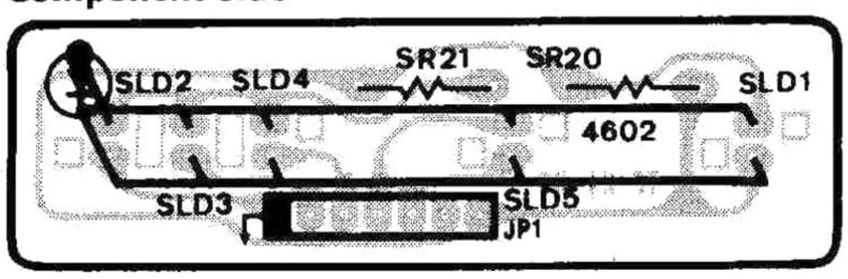


**Parts List**

| Parts No. | Stock No. | Description |
|---|---|---|
| •LED | | |
| sLD1 | 46176900 | TLS-123 |
| | or 46470200 | SEL2210S |
| sLD2 | 46470300 | SEL2410E |
| sLD3 | 46470300 | SEL2410E |
| sLD4 | 46470300 | SEL2410E |
| sLD5 | 07251000 | TLY-123 |

## 4-3. F-4603 UP, DOWN SW. Board

**Component Side**

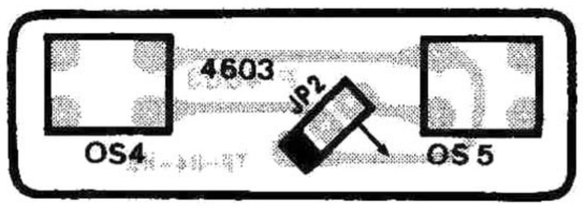


**Parts List**

| Parts No. | Stock No. | Description |
|---|---|---|
| oS4 | 46708100 | Push SW., DOWN |
| oS5 | 46708100 | Push SW., UP |

## 4-4. F-4604 Power Supply Circuit Board

**Component Side**

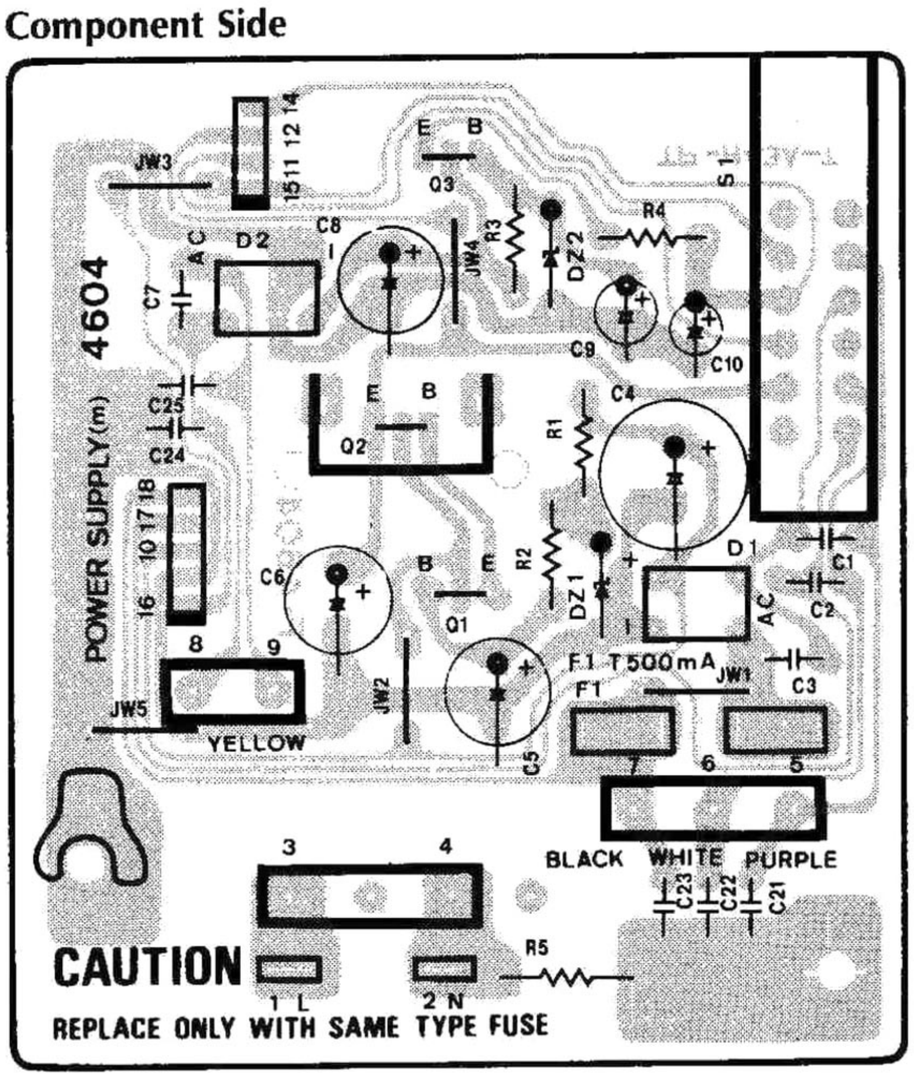


**Parts List**

| Parts No. | Stock No. | Description |
|---|---|---|
| •Transistor | | |
| ⚠ mQ1 | 46367101 | 2SC2603 |
| | or 46367301 | 2SC2458 |
| ⚠ mQ2 | 03083901 | 2SD313AL |
| ⚠ | or 46546701 | 2SD880 |
| ⚠ mQ3 | 03083901 | 2SD313AL |
| ⚠ | or 46546701 | 2SD880 |
| •Diode | | |
| ⚠ mD1 | 46273600 | DBB10-B |
| ⚠ mD2 | 46273600 | DBB10-B |
| •Zener Diode | | |
| mDZ1 | 46114300 | 05Z13-Z |
| | or 46114400 | 05Z15-X |
| mDZ2 | 46111500 | 05Z5.6-Y |
| | or 46111600 | 05Z5.6-Z |
| ⚠ mC1 | 08603600 | 0.022μF 50V C.C. |
| ⚠ mC3 | 08603600 | 0.022μF 50V C.C. |
| ⚠ mPF1 | 07184400 | Fuse 0.5A 250V (TU-D33XL) |
| ⚠ mS1 | 46412500 | Push SW., POWER (TU-D33X-XX,UL,CSA) |
| ⚠ | 46412400 | Push SW., POWER (TU-D33X-SA,EU,AS, TU-D33XL) |



www.hifiengine.com

## 4-5. F-4600 Main Circuit Board (Stock No. TU-D33X = 00814701) (Stock No. 00815705 = TU-D33XL)

Component Side

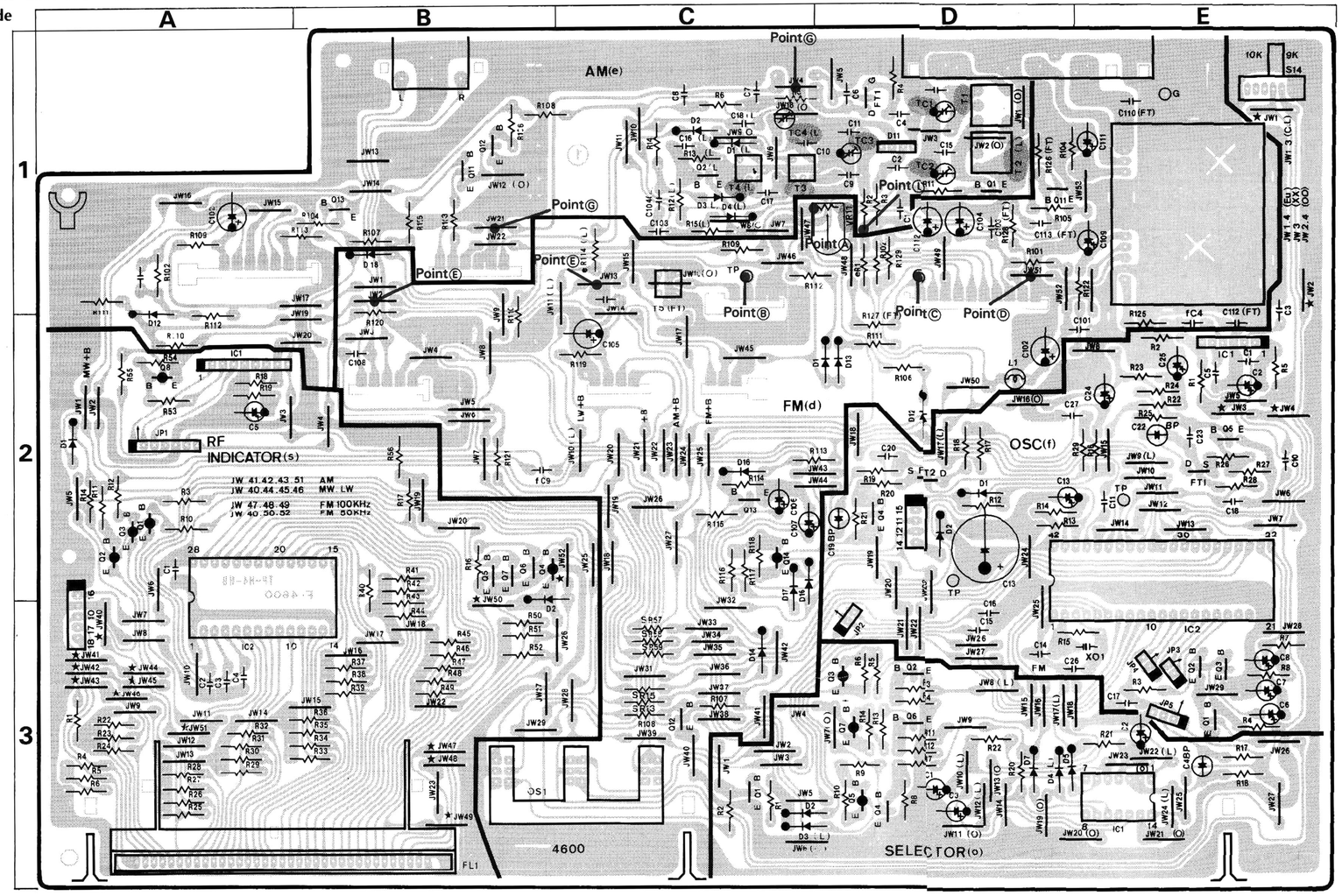


### Parts List

| Parts No. | Stock No. | Description |
|---|---|---|
| dZ1 | 48120800 | FM Frontend Pack |
| •Transistor | | |
| dQ11 | 46367101 | 2SC2603 |
| | or 46367301 | 2SC2458 |
| | or 46391901 | 2SC2785 |
| dQ12 | 46367101 | 2SC2603 |
| | or 46367301 | 2SC2458 |
| | or 46391901 | 2SC2785 |
| dQ13 | 46367101 | 2SC2603 |
| | or 46367301 | 2SC2458 |
| | or 46391901 | 2SC2785 |
| dQ14 | 46367001 | 2SA1115 |
| | or 46367201 | 2SA1048 |
| | or 46392001 | 2SA1175 |
| •Diode | | |
| dD12 | 03117600 | 1S2473T77 |
| | or 46086000 | 1S1588TP-3 |
| dD13 | 03117600 | 1S2473T77 |
| | or 46086000 | 1S1588TP-3 |
| dD14 | 03117600 | 1S2473T77 |
| | or 46086000 | 1S1588TP-3 |

| Parts No. | Stock No. | Description |
|---|---|---|
| dD15 | 03117600 | 1S2473T77 |
| | or 46086000 | 1S1588TP-3 |
| dD16 | 03117600 | 1S2473T77 |
| | or 46086000 | 1S1588TP-3 |
| dD17 | 03117600 | 1S2473T77 |
| | or 46086000 | 1S1588TP-3 |
| dD18 | 03117600 | 1S2473T77 |
| | or 46086000 | 1S1588TP-3 |
| dC108 | 46695700 | 0.016μF 50V F.C. |
| dL1 | 46204200 | Inductor 3.3μH |
| dVR11 | 07241300 | 10kΩ(B) S.V.R., Muting adj. |
| •Transistor | | |
| eQ1 | 46540801 | 2SC2878 (TU-D33XL) |
| eQ2 | 46540801 | 2SC2878 (TU-D33XL) |
| eQ11 | 46367101 | 2SC2603 |
| | or 46367301 | 2SC2458 |
| | or 46391901 | 2SC2785 |
| eQ12 | 46367101 | 2SC2603 (TU-D33XL) |
| | or 46367301 | 2SC2458 (TU-D33XL) |
| | or 46391901 | 2SC2785 (TU-D33XL) |

| Parts No. | Stock No. | Description |
|---|---|---|
| eQ13 | 46367101 | 2SC2603 |
| | or 46367301 | 2SC2458 |
| | or 46391901 | 2SC2785 |
| ⚠ dR101 | 08922100 | 22Ω 1/2W N.I.R. |
| ⚠ dR119 | 00117800 | 18Ω 1/4W F.R. |
| ⚠ dR129 | 08922100 | 22Ω 1/2W N.I.R. |
| •FET | | |
| eFT1 | 46393000 | 2SK192A-Y |
| | or 46393001 | 2SK192A-GR |
| •Diode | | |
| eD1 | 03117600 | 1S2473T77 (TU-D33XL) |
| | or 46086000 | 1S1588TP-3 (TU-D33XL) |
| eD2 | 03117600 | 1S2473T77 (TU-D33XL) |
| | or 46086000 | 1S1588TP-3 (TU-D33XL) |
| eD3 | 03117600 | 1S2473T77 (TU-D33XL) |
| | or 46086000 | 1S1588TP-3 (TU-D33XL) |
| eD4 | 03117600 | 1S2473T77 (TU-D33XL) |
| | or 46086000 | 1S1588TP-3 (TU-D33XL) |
| eD11 | 46146300 | Voltage V.C. Diode KV1236Z2 |

| Parts No. | Stock No. | Description |
|---|---|---|
| •Diode | | |
| eD12 | 03117600 | 1S2473T77 |
| | or 46086000 | 1S1588TP-3 |
| △ eR109 | 08922900 | 100Ω 1/2W N.I.R. |
| eTC1 | 46162800 | 20pF Trimmer Capacitor |
| | or 46437400 | 20pF Trimmer Capacitor |
| eTC2 | 46162800 | 20pF Trimmer Capacitor |
| | or 46437400 | 20pF Trimmer Capacitor |
| eTC3 | 46162800 | 20pF Trimmer Capacitor (TU-D33XL) |
| | or 46437400 | 20pF Trimmer Capacitor (TU-D33XL) |
| eTC4 | 46162800 | 20pF Trimmer Capacitor (TU-D33XL) |
| | or 46437400 | 20pF Trimmer Capacitor (TU-D33XL) |
| eT1 | 46394600 | AM ANT Coil |
| eT2 | 46397900 | AM RF Coil (TU-D33XL) |
| eT3 | 48074300 | AM RF Coil |
| eT4 | 48074400 | LW OSC Coil (TU-D33XL) |
| •Transistor | | |
| fQ1 | 46367101 | 2SC2603 |
| | or 46367301 | 2SC2458 |
| | or 46391901 | 2SC2785 |
| fQ2 | 46367101 | 2SC2603 |
| | or 46367301 | 2SC2458 |
| | or 46391901 | 2SC2785 |
| fQ3 | 46367101 | 2SC2603 |
| | or 46367301 | 2SC2458 |
| | or 46391901 | 2SC2785 |
| fQ4 | 46367101 | 2SC2603 (TU-D33XL) |
| | or 46367301 | 2SC2458 (TU-D33XL) |
| | or 46391901 | 2SC2785 (TU-D33XL) |
| fQ5 | 46367101 | 2SC2603 |
| | or 46367301 | 2SC2458 |
| | or 46391901 | 2SC2785 |
| •FET | | |
| fFT1 | 46643501 | 2SK163-K2 |
| | or 46643502 | 2SK163-L1 |
| | or 46643601 | 2SK117-Y |
| | or 46643602 | 2SK117-GR |
| fFT2 | 46643501 | 2SK163-K2 (TU-D33XL) |
| | or 46643502 | 2SK163-L1 (TU-D33XL) |
| | or 46643601 | 2SK117-Y (TU-D33XL) |
| | or 46643602 | 2SK117-GR (TU-D33XL) |
| •IC | | |
| fIC1 | 07225000 | TD6104P |
| fIC2 | 46397400 | TC9157P |
| | or 48127900 | TC9147BP (TU-D33X-EU, TU-D33XL) |
| | or 48128000 | TC9157AP (TU-D33X-XX,UL,CSA,SA,AS) |
| fXO1 | 07237700 | Quartz Element NC-18C |
| •Diode | | |
| fD1 | 03117600 | 1S2473T77 |
| | or 46086000 | 1S1588TP-3 |
| fD2 | 03117600 | 1S2473T77 |
| | or 46086000 | 1S1588TP-3 |
| fC12 | 46579700 | 4700μF 6.3V E.L. |
| fC19 | 08451900 | 3.3μF 50V E.B. (TU-D33XL) |
| fC22 | 08451700 | 1μF 50V E.B. |
| •Transistor | | |
| oQ1 | 46367101 | 2SC2603 |
| | or 46367301 | 2SC2458 |
| | or 46391901 | 2SC2785 |
| oQ2 | 46367101 | 2SC2603 (TU-D33XL) |
| | or 46367301 | 2SC2458 (TU-D33XL) |
| | or 46391901 | 2SC2785 (TU-D33XL) |
| oQ3 | 46367001 | 2SA1115 (TU-D33XL) |
| | or 46367201 | 2SA1048 (TU-D33XL) |
| | or 46392001 | 2SA1175 (TU-D33XL) |

| Parts No. | Stock No. | Description |
|---|---|---|
| oQ4 | 46367101 | 2SC2603 (TU-D33XL) |
| | or 46367301 | 2SC2458 (TU-D33XL) |
| | or 46391901 | 2SC2785 (TU-D33XL) |
| oQ5 | 46367001 | 2SA1115 |
| | or 46367201 | 2SA1048 |
| | or 46392001 | 2SA1175 |
| oQ6 | 46367101 | 2SC2603 |
| | or 46367301 | 2SC2458 |
| | or 46391901 | 2SC2785 |
| oQ7 | 46367001 | 2SA1115 |
| | or 46367201 | 2SA1048 |
| | or 46392001 | 2SA1175 |
| •IC | | |
| oIC1 | 46426900 | μPD4025BC |
| | or 48055000 | MSM4025BRS |
| | or 48122900 | HD14025BP |
| | or 48123000 | TC4025BP |
| •Diode | | |
| oD2 | 03117600 | 1S2473T77 (TU-D33XL) |
| | or 46086000 | 1S1588TP-3 (TU-D33XL) |
| oD3 | 03117600 | 1S2473T77 (TU-D33XL) |
| | or 46086000 | 1S1588TP-3 (TU-D33XL) |
| oD4 | 03117600 | 1S2473T77 (TU-D33XL) |
| | or 46086000 | 1S1588TP-3 (TU-D33XL) |
| oD5 | 03117600 | 1S2473T77 |
| | or 46086000 | 1S1588TP-3 |
| oD7 | 03117600 | 1S2473T77 |
| | or 46086000 | 1S1588TP-3 |
| oC4 | 08450800 | 3.3μF 16V E.B. |
| oS1 | 48069500 | Push SW., FM MODE, TUNING, FM NOISE CANCELLER |
| oS14 | 46177200 | Slide SW., AM STEP (TU-D33X-XX) |
| oZ1 | 46547300 | 4P Terminal Board, Antenna |
| oZ2 | 48148500 | 2P Terminal Board, OUTPUT |
| •Transistor | | |
| sQ1 | 46367001 | 2SA1115 |
| | or 46367201 | 2SA1048 |
| | or 46392001 | 2SA1175 |
| sQ2 | 46367001 | 2SA1115 (TU-D33XL) |
| | or 46367201 | 2SA1048 (TU-D33XL) |
| | or 46392001 | 2SA1175 (TU-D33XL) |
| sQ3 | 46367001 | 2SA1115 (TU-D33XL) |
| | or 46367201 | 2SA1048 (TU-D33XL) |
| | or 46392001 | 2SA1175 (TU-D33XL) |

| Parts No. | Stock No. | Description |
|---|---|---|
| sQ4 | 46367001 | 2SA1115 |
| | or 46367201 | 2SA1048 |
| | or 46392001 | 2SA1175 |
| sQ5 | 46367101 | 2SC2603 (TU-D33XL, TU-D33X-SA,EU,AS) |
| | or 46367301 | 2SC2458 (TU-D33XL, TU-D33X-SA,EU,AS) |
| | or 46391901 | 2SC2785 (TU-D33XL, TU-D33X-SA,EU,AS) |
| sQ6 | 46367101 | 2SC2603 (TU-D33XL, TU-D33X-SA,EU,AS) |
| | or 46367301 | 2SC2458 (TU-D33XL, TU-D33X-SA,EU,AS) |
| | or 46391901 | 2SC2785 (TU-D33XL, TU-D33X-SA,EU,AS) |
| sQ7 | 46367101 | 2SC2603 (TU-D33XL, TU-D33X-SA,EU,AS) |
| | or 46367301 | 2SC2458 (TU-D33XL, TU-D33X-SA,EU,AS) |
| | or 46391901 | 2SC2785 (TU-D33XL, TU-D33X-SA,EU,AS) |
| sQ8 | 46367001 | 2SA1115 |
| | or 46367201 | 2SA1048 |
| | or 46392001 | 2SA1175 |
| •IC | | |
| sIC1 | 46197200 | BA6137 |
| sIC2 | 46410100 | TD6301AP |
| •Diode | | |
| sD1 | 03117600 | 1S2473T77 (TU-D33XL) |
| | or 46086000 | 1S1588TP-3 (TU-D33XL) |
| sD2 | 03117600 | 1S2473T77 (TU-D33XL, TU-D33X-SA,EU,AS) |
| | or 46086000 | 1S1588TP-3 (TU-D33XL, TU-D33X-SA,EU,AS) |
| sFL1 | 48056000 | FL. Display Tube FG78L8GR |
| •LED | | |
| sLD6 | 46176900 | TLS-123 |
| | or 46470200 | SEL2210S |
| sLD7 | 46176900 | TLS-123 |
| | or 46470200 | SEL2210S |
| sLD8 | 46176900 | TLS-123 |
| | or 46470200 | SEL2210S |
| sLD9 | 46176900 | TLS-123 |
| | or 46470200 | SEL2210S |
| sLD10 | 46176900 | TLS-123 |
| | or 46470200 | SEL2210S |
| sLD11 | 46176900 | TLS-123 |
| | or 46470200 | SEL2210S |

## 4-6. F-4657 AM IF Circuit Board (Stock No. TU-D33X = 00814201) (Stock No. 00815205 = TU-D33XL)

**Component Side**

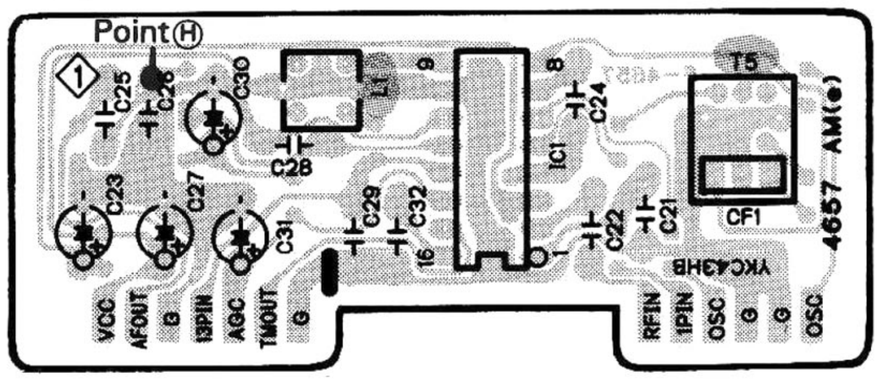


**Pattern Side <Chip Parts>**

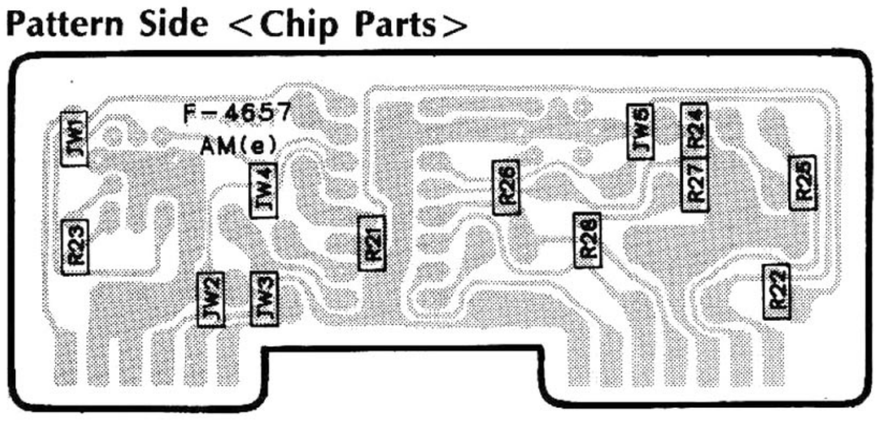


**Parts List**

| Parts No. | Stock No. | Description |
|---|---|---|
| •IC | | |
| eIC1 | 03608000 | LA1240 |
| eJW1 | 46741100 | Cross Conductor (Chip) |
| eR21 | 46747600 | 1kΩ 1/8W Chip R. |
| eR22 | 46745200 | 100Ω 1/8W Chip R. |
| eR23 | 46744400 | 47Ω 1/8W Chip R. |
| eR24 | 46747600 | 1kΩ 1/8W Chip R. |
| eR25 | 46752400 | 100kΩ 1/8W Chip R. |
| eR26 | 46745200 | 100Ω 1/8W Chip R. |
| eR27 | 46750000 | 10kΩ 1/8W Chip R. |
| eR28 | 46750000 | 10kΩ 1/8W Chip R. |
| eCF1 | 48069900 | Ceramic Filter (TU-D33XL) |
| eT5 | 48069800 | Ceramic Filter CFLZ450 (TU-D33X) |
| | 48072000 | AM IF Coil (TU-D33XL) |
| eL1 | 46369600 | AM IF Coil |



www.hifiengine.com

# 4-7. F-4658 FM IF Amp. Circuit Board

(Stock No. 00814301)

**Component Side**

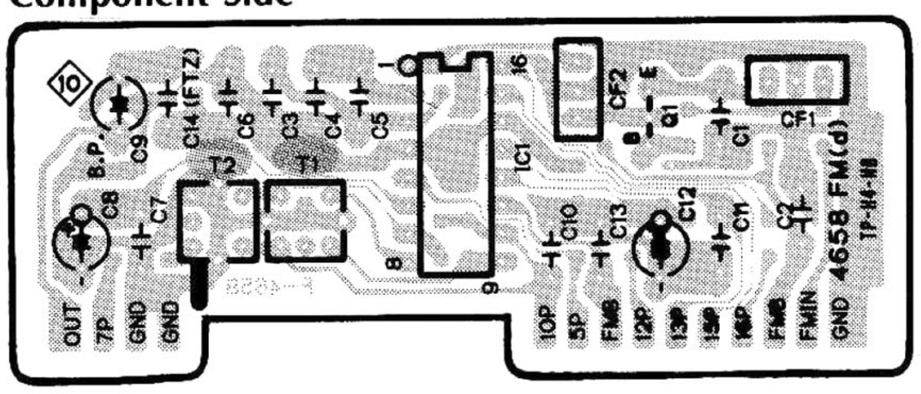


**Pattern Side <Chip Parts>**

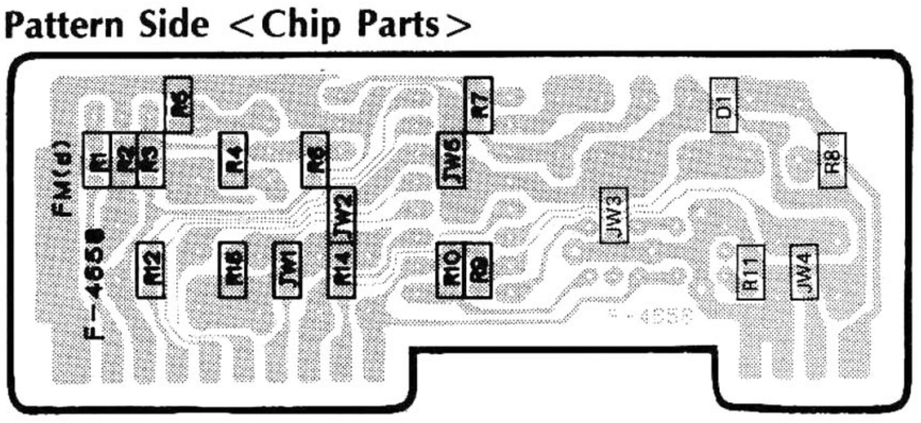


**Parts List**

| Parts No. | Stock No. | Description |
|---|---|---|
| •Transistor | | |
| dQ1 | 46393201 | 2SC2786 |
| •IC | | |
| dIC1 | 07191200 | LA1231N |
| •Diode | | |
| dD1 | 46852000 | RLS-73 |
| dJW1 | 46741100 | Cross Conductor (Chip) |
| dR1 | 46745800 | 180Ω 1/8W Chip R. |
| dR2 | 46747000 | 560Ω 1/8W Chip R. |
| dR3 | 46747600 | 1kΩ 1/8W Chip R. |
| dR4 | 46745200 | 100Ω 1/8W Chip R. |
| dR5 | 46747400 | 820Ω 1/8W Chip R. |
| dR6 | 46746600 | 390Ω 1/8W Chip R. |
| dR7 | 46746400 | 330Ω 1/8W Chip R. |
| dR8 | 46752400 | 100kΩ 1/8W Chip R. |
| dR9 | 46750800 | 22kΩ 1/8W Chip R. |
| dR10 | 46750400 | 15kΩ 1/8W Chip R. |
| dR11 | 46748800 | 3.3kΩ 1/8W Chip R. |
| dR12 | 46750000 | 10kΩ 1/8W Chip R. |
| dR14 | 46750000 | 10kΩ 1/8W Chip R. |
| dR15 | 46749600 | 6.8kΩ 1/8W Chip R. |
| dC9 | 08450900 | 4.7μF 16V E.B. |
| dCF1 | 46202500 | Ceramic Filter SFE10.7MS2 (RED) |
| dCF2 | 46202500 | Ceramic Filter SFE10.7MS2 (RED) |
| dT1 | 48072100 | FM IF Coil |
| dT2 | 48072200 | FM IF Coil |

# 4-8. F-4659 FM MPX Circuit Board

(Stock No. 00814401)

**Component Side**

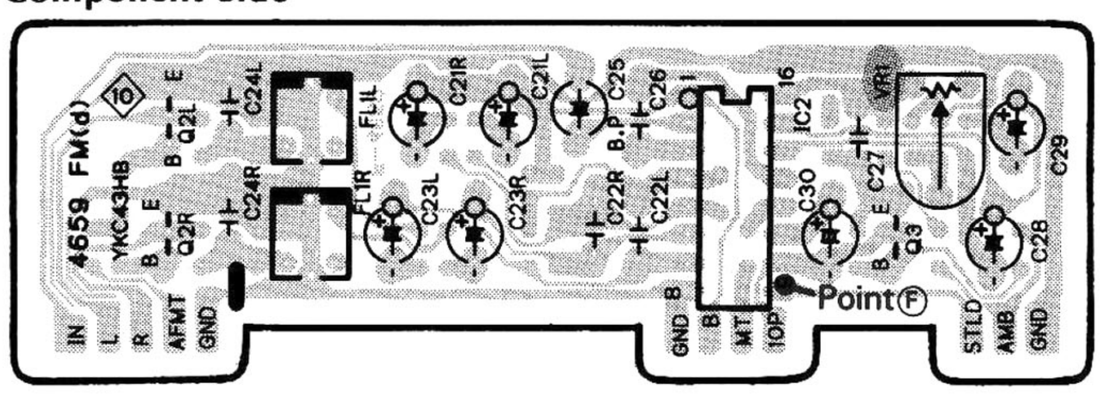


**Pattern Side <Chip Parts>**

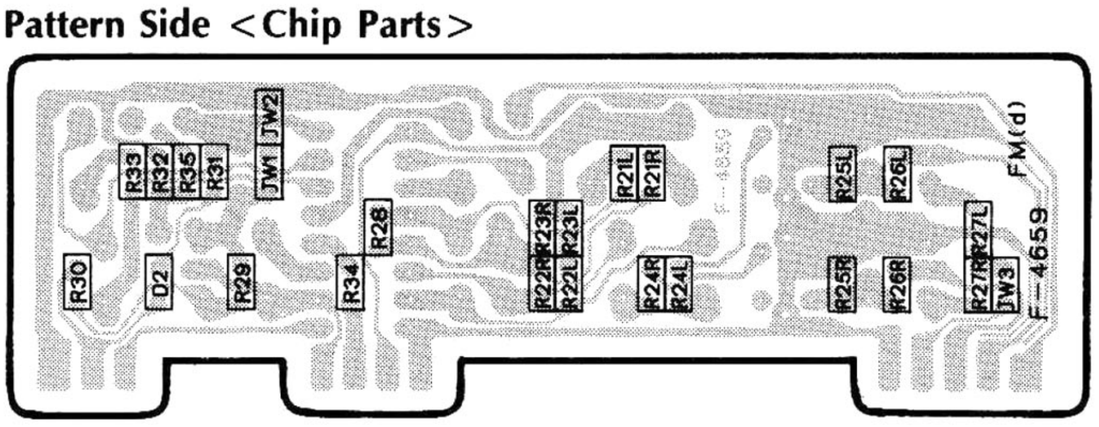


**Parts List**

| Parts No. | Stock No. | Description |
|---|---|---|
| •Transistor | | |
| dQ2 | 46391901 | 2SC2785 |
| dQ3 | 46391901 | 2SC2785 |
| •IC | | |
| dIC2 | 03603200 | HA1196 |
| •Diode | | |
| dD2 | 46852000 | RLS-73 |
| dJW1 | 46741100 | Cross Conductor (Chip) |
| dR21 | 46750200 | 12kΩ 1/8W Chip R. |
| dR22 | 46751600 | 47kΩ 1/8W Chip R. |
| dR23 | 46751000 | 27kΩ 1/8W Chip R. |
| dR24 | 46748400 | 2.2kΩ 1/8W Chip R. |
| dR25 | 46749400 | 5.6kΩ 1/8W Chip R. |
| dR26 | 46747600 | 1kΩ 1/8W Chip R. |
| dR27 | 46748800 | 3.3kΩ 1/8W Chip R. |
| dR28 | 46753000 | 180kΩ 1/8W Chip R. |
| dR29 | 46749200 | 4.7kΩ 1/8W Chip R. |
| dR30 | 46750800 | 22kΩ 1/8W Chip R. |
| dR31 | 46750800 | 22kΩ 1/8W Chip R. |
| dR32 | 46750800 | 22kΩ 1/8W Chip R. |
| dR33 | 46747600 | 1kΩ 1/8W Chip R. |
| dR34 | 46750800 | 22kΩ 1/8W Chip R. |
| dR35 | 46753200 | 220kΩ 1/8W Chip R. |
| dC22 | 46282000 | 1500pF 50V F.C. |
| dC24 | 46531300 | 5600pF 50V F.C. |
| dC25 | 08451200 | 2.2μF 25V E.B. |
| dFI 1 | 48072300 | Low Pass Filter |
| dVR1 | 07241300 | 10kΩ(B) S.V.R., VCO adj. |



www.hifiengine.com

# 5. INTERIOR BLOCK DIAGRAM OF IC & TERMINAL FUNCTION OF TC9157P

## •LA1231N (FM IF AMP & Quadrature Detector IC)

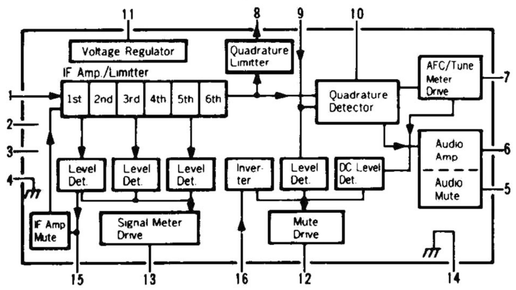


## •LA1240/HA1197 (AM Tuner IC)

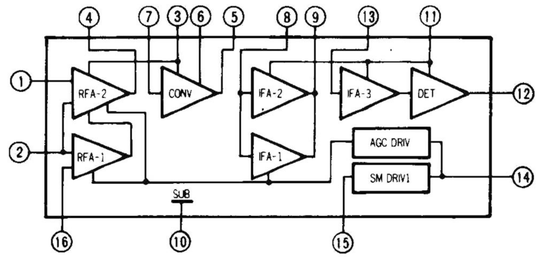


## •TD6104P (Prescaler IC)

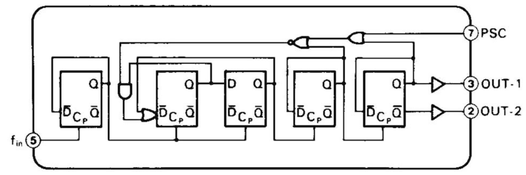


## •TD6301P (7 Segment Decoder IC)

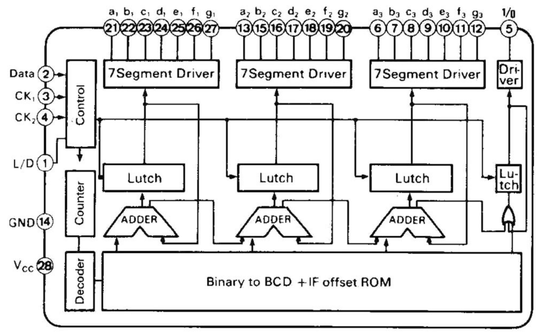


## •TC4025BP/μPD4025BP/MSM4025BRS/HD14025BP (Triple NOR IC)

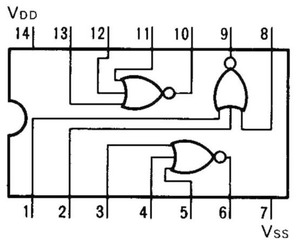


## •TC9157P (PLL & Control IC)

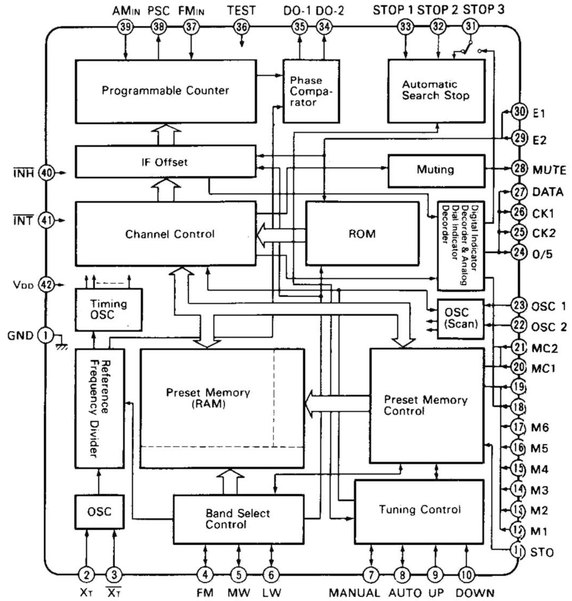


## •BA6137 (L.E.D. Drive IC)

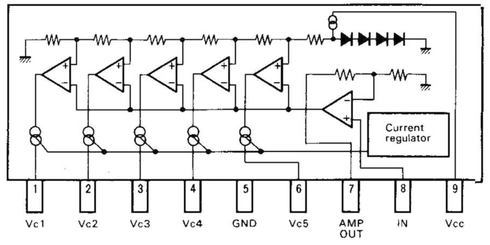


## •HA1196 (MPX IC)

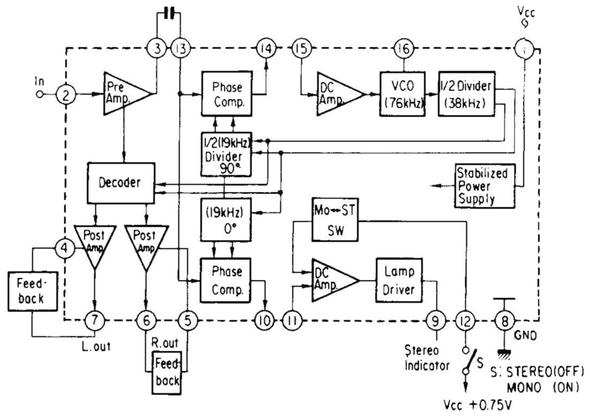


## •Terminal Function of LSI-TC9157P

| Pin No. | Pin Name | Functions |
|---|---|---|
| 2,3 | XT $\overline{XT}$ | Terminals to connect a quartz oscillator for generating a reference frequency. |
| 4<br>5<br>6 | FM<br>MW<br>LW | Terminals to input a signal for switching FM/MW/LW band. |
| 7<br>8 | MANUAL<br>AUTO | Terminal to input a signal for switching the manual operation to automatic search operation or vice versa in the UP/DOWN tuning mode.<br>"H": Automatic, "L": Manual |
| 9<br>10 | UP<br>DOWN | Terminals to input a signal from the tuning key.<br>* In manual operation: When the key is kept depressed for 0.3 sec or more in one-step/one-push step feeding, the operation changes to fast forwarding; when the key is released, the operation stops at the next stop. In this case, even if there is a station on the way, the station is neglected.<br>* In automatic search operation: When the key is depressed once, the automatic search operation starts and stops automatically after having selected the desired station. |
| 11 | STO | Terminal to input a signal for storing data in the preset memory unit. Input/output terminal in which a LED driver is provided.<br>* When depressing the STO key, the STO lamp comes on. Next, when any desired memory No. key is depressed, the data on receiving frequency is written into the memory unit and the STO lamp goes off.<br>* When the STO key is depressed and the memory No. key is not depressed, the frequency data is released automatically. |
| 12<br>.<br>17 | M1<br>M6 | Terminals to input a signal for designating memory address.<br>Input/output terminals in which a LED driver is provided.<br>* Terminals $M_1$ to $M_6$ designate the addresses of FM memory unit in FM receiving and the addresses of AM memory unit in AM receiving.<br>* When depressing the STO key and any desired station key of $M_1$ to $M_6$, the data is written into the memory unit.<br>* When depressing any desired station key of $M_1$ to $M_6$, the data is read out. |
| 22<br><br>23 | OSC 2<br><br>OSC 1 | Terminal to connect a condenser and resistor for the oscillator for determinating the speed of AM automatic search operation.<br>Terminal to connect a condenser and resistor for the oscillator for determinating the speed of FM automatic search operation. |
| 24<br>25<br>26<br>27 | 0/5<br>CK2<br>CK1<br>DATA | Terminals to output the data for displaying the received frequency digitally and a timing signal. The data fed to the driver TD6301P for displaying a static frequency and the timing signal are outputted once only when the frequency is updated in such case as when the power supply is tuned on, the UP/DOWN key is depressed, the automatic scanning operation is made, the data are read out of the memory unit, or FM/AM is switched. In the ordinary receiving state, this terminal is fixed to a "L" level.<br>* 0/5: For displaying 50 kHz during FM receiving in Europe.<br>* Data: Binary coded frequency data and receiving band.<br>* CK-1, CK-2: Initialize and transfer clock signals. |
| 28 | MUTE | Terminal to output the muting signal. The terminal is kept in "L" level in ordinary state, and in "H" level in muting. |
| 29<br>30 | E2<br>E1 | Terminals to input a signal for selecting destinations of Japan, USA, and Europe.<br>* Inputs of terminals $E_1$ and $E_2$ are read and latched in INH = L state and in FM/AM switching. |

| $E_1$ | $E_2$ | Mode |
|---|---|---|
| 0 | 0 | Japan |
| 1 | 0 | Europe |
| 0 | 1 | USA (MW 9kHz) |
| 1 | 1 | USA (MW 10kHz) |

| Pin No. | Pin Name | Functions |
|---|---|---|
| 31 | STOP 3 | When a IF450 kHz signal is applied to this terminal during automatic search operation, the scanning operation stops. |
| 32 | STOP 2 | Terminal to input a signal for performing the automatic search stop.<br>When a "H" level signal is applied to STOP 1 and this terminal during automatic search operation, the scanning operation stops. |
| 33 | STOP 1 | Terminal to input a signal for slowing the speed of scanning operation.<br>When a "H" level signal is applied to this terminal during automatic search operation, the speed of scanning operation halves. |
| 34<br>35 | $D_0$-2<br>$D_0$-1 | Terminals to output a signal from a phase comparator. These terminals can be used for FM and AM, separately, since the same signal is outputted from the terminals $D_0$-1 and $D_0$-2 at the same time. |
| 36 | TEST | Terminal to input a signal of test mode. Test mode in "H" level. |
| 37 | FMIN | Terminal to input a signal from the FM programmable counter.<br>An amplifier is provided in the input. |
| 38 | PSC | Terminal to output a signal for controlling the Prescaler IC of TD6104P. |
| 39 | AMIN | Terminal to input a signal from the AM programmable counter.<br>An amplifier is provided in the input. |
| 40 | INH | Terminal to input a signal of inhibit. Ordinary operation in "H" level; inhibit operation in "L" level. |
| 41 | INT | Terminal to input an initialize signal. This terminal changes to H level in the ordinary operation and to L level in the initialize operation. |
| 42<br>1 | VDD<br>GND | Power supply terminals. 5V ± 0.5V. |



www.hifiengine.com

# 6. SCHEMATIC DIAGRAM 6-1. TU-D33X

* Design and specifications subject to change without notice for improvement.
* La présention et les spécifications sont susceptibles d'être modifiées sans préavis par suites d'améliorations éventuelles.
* Änderungen, die dem technischen Fortschritt dienen, bleiben vorbehalten.

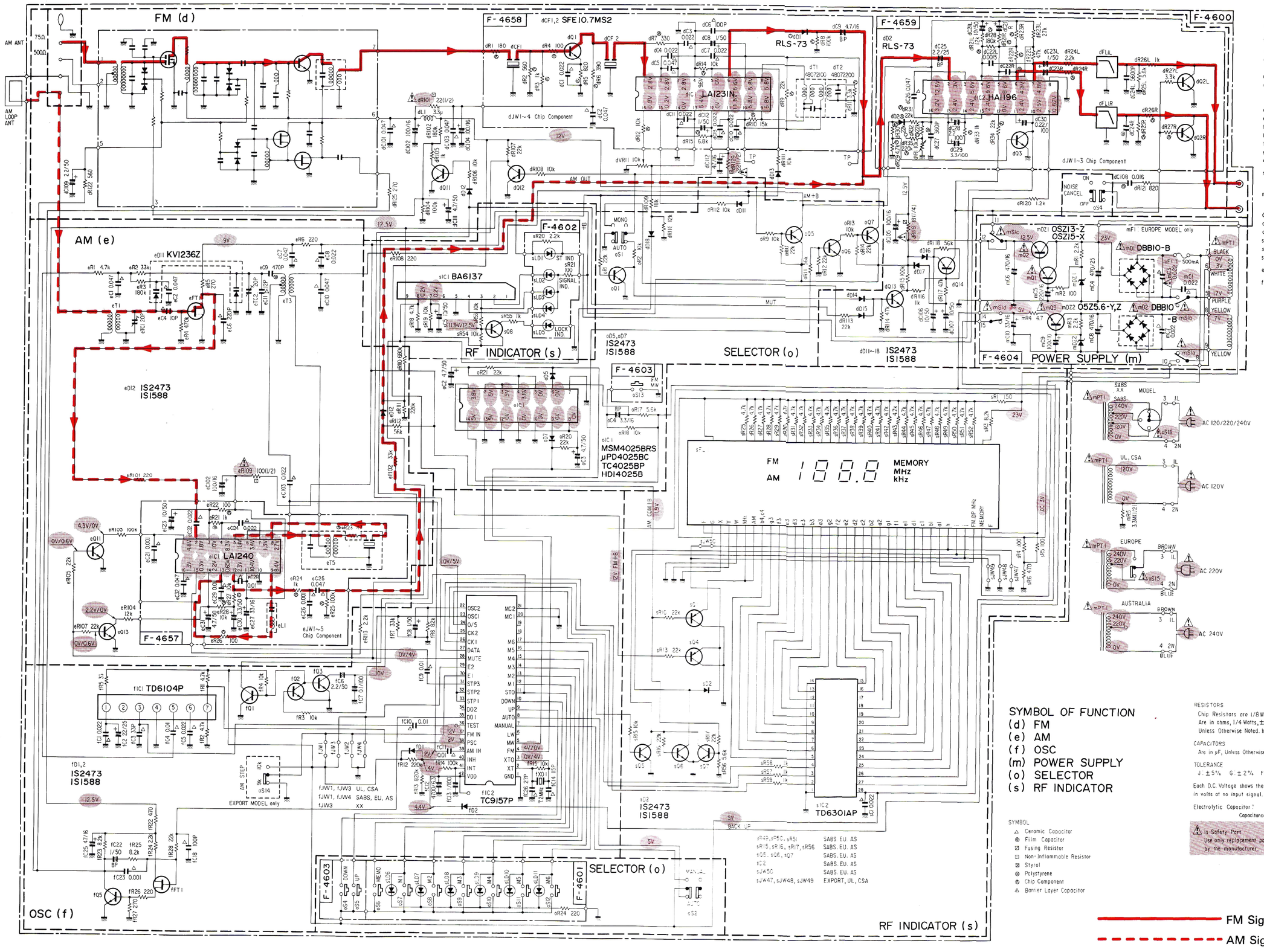


| | |
|---|---|
| dQ1 | 2SC2786(L,K) |
| dQ2,3 | 2SC2785(J,H,F,E) |
| dQ11,12 | 2SC2458(Y,GR) |
| dQ13 | 2SC2603(E,F) |
| | 2SC2785(J,H,F,E) |
| oQ1 | |
| oQ6 | |
| eQ11 | |
| eQ13 | |
| fQ1,2 | |
| fQ3 | |
| fQ5 | |
| sQ5,6 | |
| sQ7 | |
| mQ1 | 2SC2458(Y,GR) |
| | 2SC2603(E,F) |
| mQ2,3 | 2SD313AL(D,E,F) |
| | 2SD880(Y,GR) |
| dQ14 | 2SA1115(E,F) |
| oQ5 | 2SA1048(Y,GR) |
| oQ7 | 2SA1175(J,H,E,F) |
| sQ1 | |
| sQ4 | |
| sQ8 | |
| eFT1 | 2SK192A(Y,GR) |
| fFT1 | 2SK117(Y,GR) |
| | 2SK163(K2,L1) |

2SC2878 2SD313 2SD880
2SA1048 2SA1115 2SC2458 2SC2603
2SA1175 2SC2785 2SC2786
2SK192A
2SK117 2SK163
BA6137
TD6104P
µPD4025BC HA1196 LA1231N LA1240 MSM4025BRS TC4025BP TC9147BP TC9157P TD6301AP
Dot or Slit or Line
DBB10-B
1S1588TP-3 1S2473T77 05Z5.6Y 05Z5.6Z 05Z13X 05Z13Z
SEL2210S SEL2410E TLS-123 TLY-123

SYMBOL
△ Ceramic Capacitor
◎ Film Capacitor
⊠ Fusing Resistor
⊡ Non-Inflammable Resistor
⊠ Styrol
⊗ Polystyrene
Ⓒ Chip Component
△ Barrier Layer Capacitor

| | |
|---|---|
| sR49,sR50,sR51 | SABS EU. AS |
| sR15,sR16,sR17,sR56 | SABS EU. AS |
| sQ5,sQ6,sQ7 | SABS EU. AS |
| sC2 | SABS EU. AS |
| sJW50 | SABS EU. AS |
| sJW47,sJW48,sJW49 | EXPORT,UL,CSA |

RESISTORS
Chip Resistors are 1/8 Watts
Are in ohms, 1/4 Watts, ± 5% Tolerance
Unless Otherwise Noted. K: kΩ, M: MΩ

CAPACITORS
Are in µF, Unless Otherwise Noted. P: pF

TOLERANCE
J: ± 5% G: ± 2% F: ± 1%

Each D.C Voltage shows the nominal value in volts at no input signal.

Electrolytic Capacitor :
Capacitance (µF)/Volt (V)

⚠ is Safety Part
Use only replacement parts recommended by the manufacturer.

# 6-2. TU-D33XL

* Design and specifications subject to change without notice for improvement.
* La présention et les spécifications sont susceptibles d'être modifiées sans préavis par suites d'améliorations éventuelles.
* Änderungen, die dem technischen Fortschritt dienen, bleiben vorbehalten.

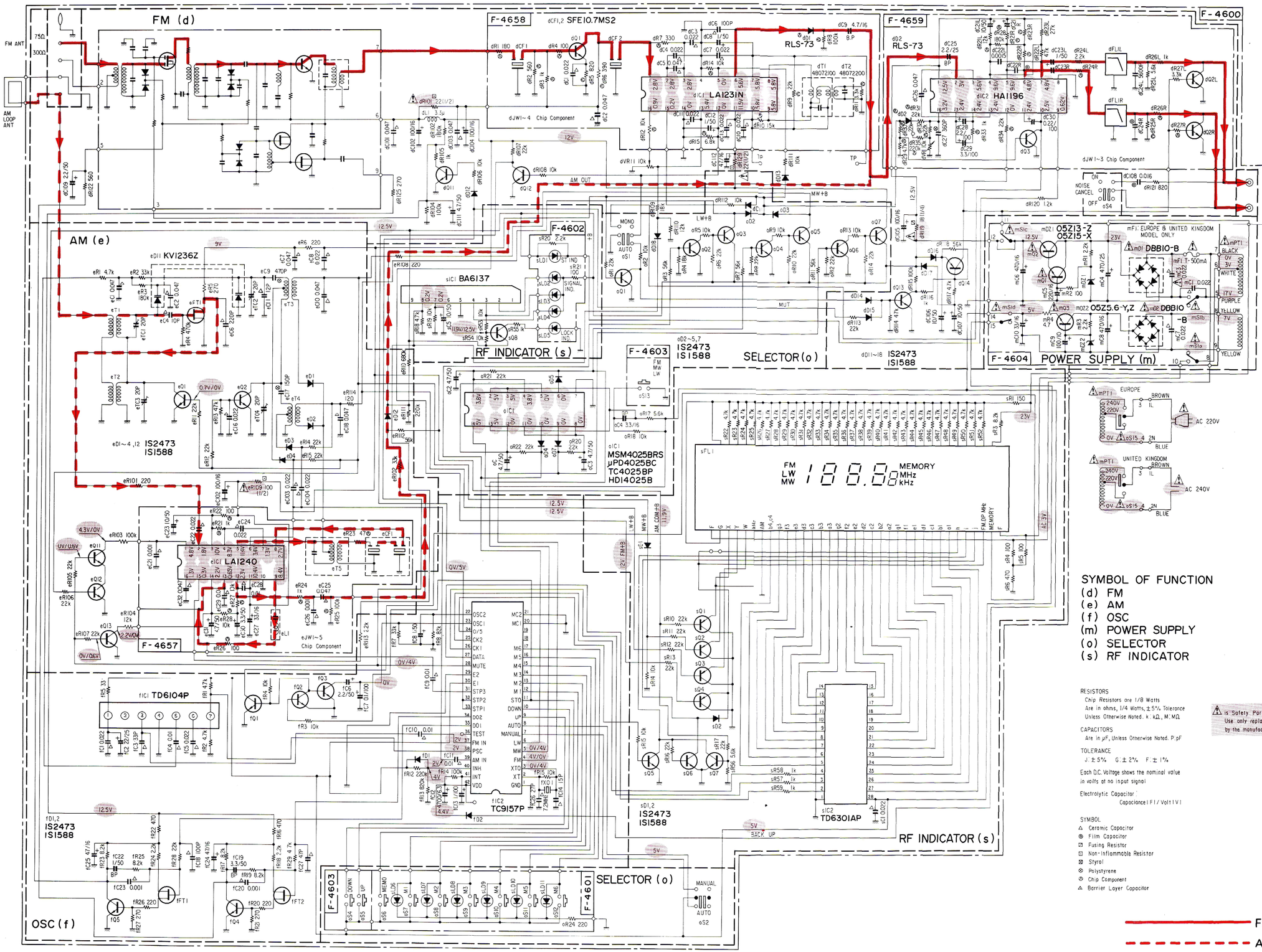


| | |
|---|---|
| dQ1 | 2SC2786(L,K) |
| dQ2,3 | 2SC2785(J,H,F,E) |
| dQ11,12 | 2SC2458(Y,GR) |
| dQ13 | 2SC2603(E,F) |
| | 2SC2785(J,H,F,E) |
| eQ1,2 | |
| eQ4,6 | |
| eQ11,12 | |
| eQ13 | |
| fQ1,2 | |
| fQ3,4 | |
| fQ5 | |
| sQ5,6 | |
| sQ7 | |
| mQ1 | 2SC2458(Y,GR) |
| | 2SC2603(E,F) |
| mQ2,3 | 2SD313AL(D,E,F) |
| | 2SD880(Y,GR) |
| dQ14 | 2SA1115(E,F) |
| eQ3,5 | 2SA1048(Y,GR) |
| nQ7 | 2SA1175(J,H,F,E) |
| sQ1,2 | |
| sQ3,4 | |
| sQ8 | |
| eQ1,2 | 2SC2878(A,B) |
| eFT1 | 2SK192A(Y,GR) |
| fFT1,2 | 2SK117(Y,GR) |
| | 2SK163(K2,L1) |

## SYMBOL OF FUNCTION

(d) FM
(e) AM
(f) OSC
(m) POWER SUPPLY
(o) SELECTOR
(s) RF INDICATOR

RESISTORS
Chip Resistors are 1/8 Watts
Are in ohms, 1/4 Watts, ±5% Tolerance
Unless Otherwise Noted. k: kΩ, M: MΩ

CAPACITORS
Are in µF, Unless Otherwise Noted. P:pF

TOLERANCE
J: ± 5% G: ± 2% F: ± 1%

Each D.C. Voltage shows the nominal value in volts at no input signal

Electrolytic Capacitor :
Capacitance ( F ) / Volt ( V )

SYMBOL
△ Ceramic Capacitor
◎ Film Capacitor
⊠ Fusing Resistor
⊡ Non-Inflammable Resistor
⊠ Styrol
⊗ Polystyrene
⊘ Chip Component
△ Barrier Layer Capacitor

⚠ is Safety Part
Use only replacement parts recommended by the manufacturer

FM Signal Line
AM Signal Line

# 7. OTHER PARTS

## 7-1. Front View

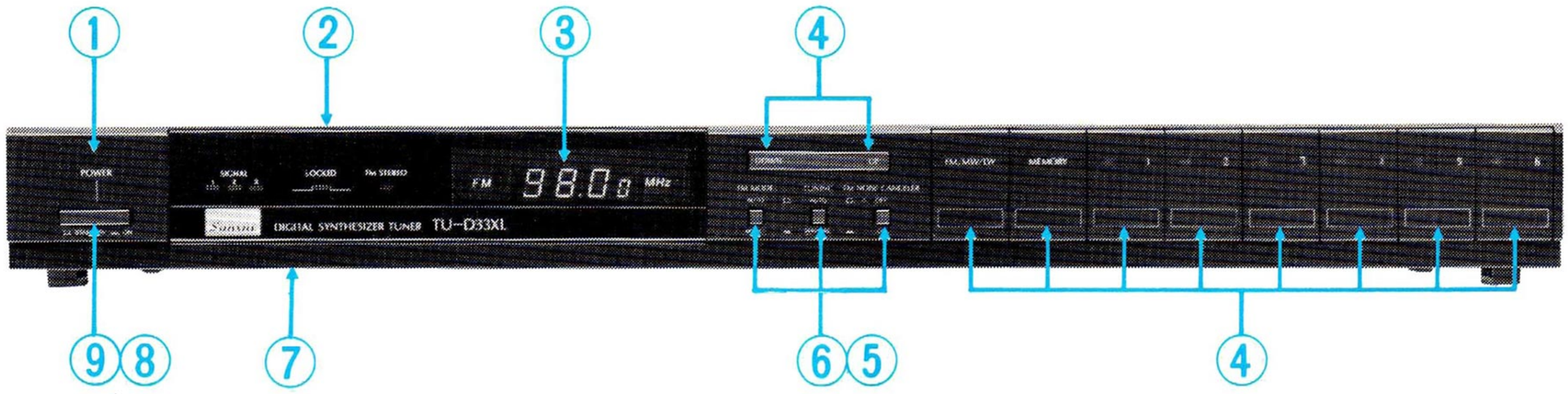


## 7-2. Top View

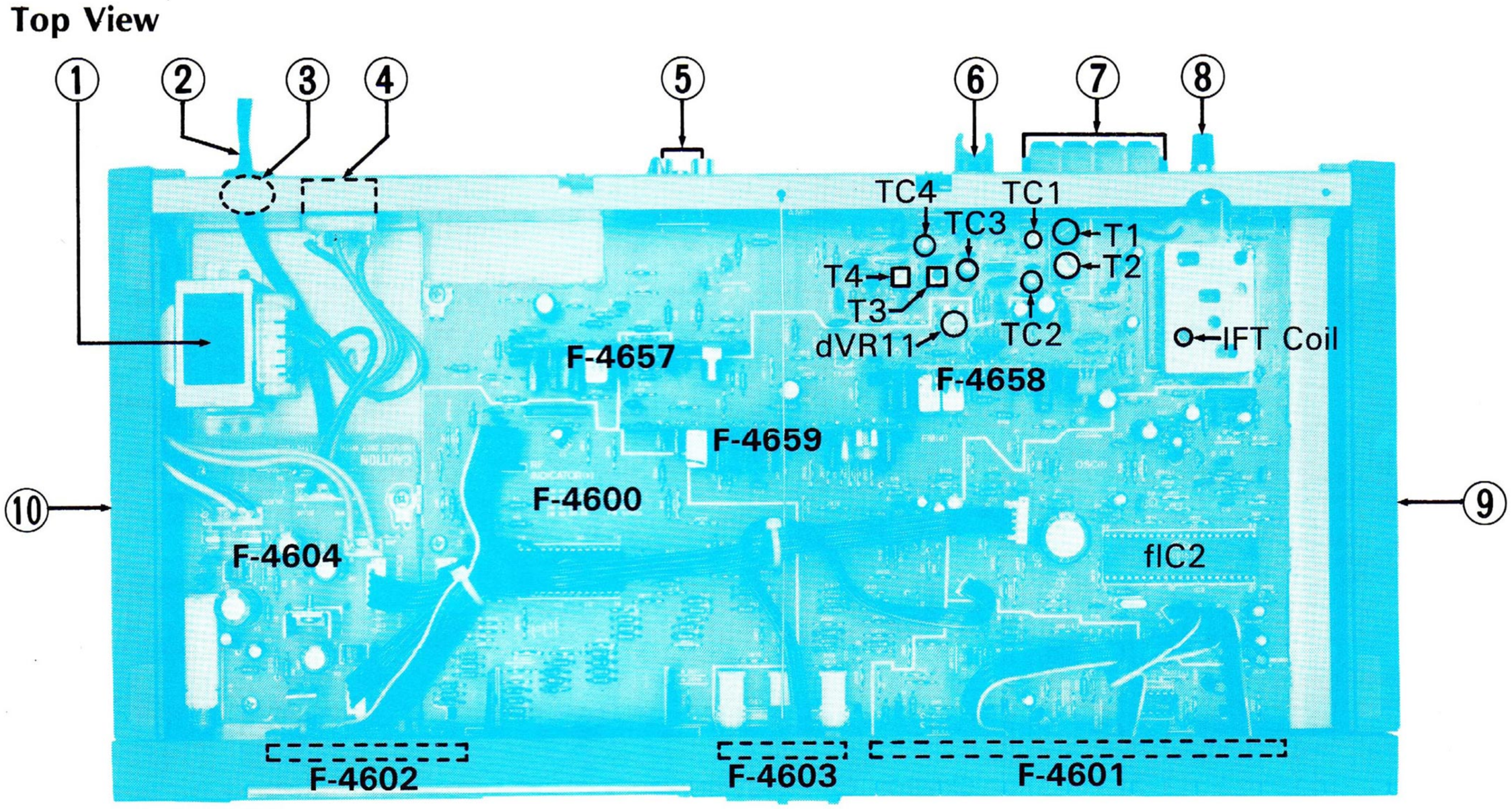


**Parts List <Front View>**

| Parts No. | Stock No. | Description |
|---|---|---|
| 1 | 47606100 | Front Panel Ass'y (TU-D33X) |
| | 47606300 | Front Panel Ass'y (TU-D33XL) |
| 2 | 47602100 | Bonnet |
| 3 | 48056000 | FL. Display Tube, FG78L8GR |
| 4 | 46708100 | Push SW., UP, DOWN, FM/AM, MEMORY, 1, 2, 3, 4, 5, 6, |
| 5 | 07917300 | Knob, FM MODE, TUNING, FM NOISE CANCELLER |
| 6 | 48069500 | Push SW., FM MODE, TUNING, FM NOISE CANCELLER |
| ⚠ 7 | 48069600 | Voltage Selector (TU-D33X-XX,SA) |
| 8 | 47601400 | Knob, POWER |
| ⚠ 9 | 46412500 | Push SW., POWER (TU-D33X-XX,UL,CSA) |
| ⚠ | 46412400 | Push SW., POWER (TU-D33X-SA,EU,AS, TU-D33XL) |

**Parts List <Top View>**

| Parts No. | Stock No. | Description |
|---|---|---|
| ⚠ 1 | 15017801 | Power Transformer (TU-D33X-XX,SA) |
| ⚠ | 15017802 | Power Transformer (TU-D33X-UL,CSA) |
| ⚠ | 15017805 | Power Transformer (TU-D33X-EU,AS, TU-D33XL) |
| ⚠ 2 | 38004700 | Power Supply Cord (TU-D33X-XX,UL,CSA,SA) |
| ⚠ | 38004500 | Power Supply Cord (TU-D33X-EU, TU-D33XL-EU) |
| ⚠ | 38004300 | Power Supply Cord (TU-D33XL-BS) |
| ⚠ | 07204200 | Power Supply Cord (TU-D33X-AS) |
| 3 | 39106000 | Strain Relief (TU-D33X-XX,UL,CSA,SA) |
| | 39104900 | Strain Relief (TU-D33X-EU,AS, TU-D33XL) |
| ⚠ 4 | 07204700 | Slide SW., voltage selector (TU-D33X-EU,AS, TU-D33XL) |
| 5 | 48148500 | 2P-Terminal, OUTPUT |
| 6 | 07193200 | Antenna Holder |
| 7 | 46547300 | Antenna Terminal |
| 8 | 22301510 | GND Terminal |
| 9 | 47538000 | Side Panel (Right) |
| 10 | 47537900 | Side Panel (Left) |



www.hifiengine.com

# 8. PACKING LIST

| Parts No. | Stock No. | Description |
|---|---|---|
| 1 | 07599500 | Vinyl Cover |
| 2 | 47178200 | Styrofoam Packing |
| 3 | 47601000 | Carton Case (TU-D33X) |
| | 47601800 | Carton Case (TU-D33XL) |

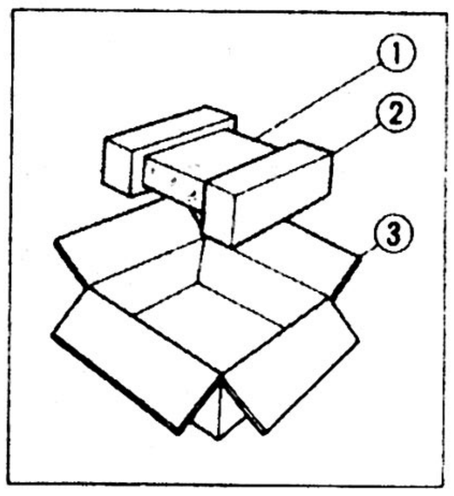


# 9. ACCESSORY LIST

| | Stock No. | Description |
|---|---|---|
| | 38103200 | Pin Plug Cord |
| | 46051700 | FM Antenna |
| | 48069700 | AM Loop Antenna |
| | 46958100 | Operating Instruction (TU-D33X) |
| | 46958200 | Operating Instruction (TU-D33XL) |

# 10. NOTES

When the user moves to different channel step area on FM or AM, the following arrangements must be performed.

| | Sets Applicable to | Channel Step Frequency | | fIC1 Input Port Level | | Cross Conductor (F-4600) | | | | 9k/10k Switch oS14 |
|---|---|---|---|---|---|---|---|---|---|---|
| | | AM | FM | $E_1$ | $E_2$ | jw1 | jw3 | jw4 | jw2 | |
| I | South Africa | 9 kHz | 50 kHz | L | L | — | — | ○ | ○ | None |
| | Europe | 9 kHz | 50 kHz | H | L | ○ | — | ○ | — | None |
| | America | 9 kHz | 100 kHz | L | H | — | ○ | — | ○ | None |
| | America | 10 kHz | 100 kHz | H | H | ○ | ○ | — | — | None |
| II | Sets which 9k/10k Switch is installed | 9 kHz | 100 kHz | L | H | — | ○ | — | — | 9 kHz |
| | | 10 kHz | 100 kHz | H | H | | | | | 10 kHz |

•**Note:** 1) L = Low Level, H = High Level, ○ = Connect, — = Remove
2) oS14 = AM 9k/10k Switch on F-4600
3) Remove the 9k/10 kHz switch only when a user operates the set (II) in 50 kHz channel step (I)

Sansui

SANSUI ELECTRIC CO., LTD.: 14-1, Izumi 2-chome, Suginami-ku, Tokyo 168 Japan
PHONE: (03) 324-8891/TELEX: 232-2076 (International Division)
SANSUI ELECTRONICS CORPORATION: 1250 Valley Brook Ave. Lyndhurst, N.J. 07071 U.S.A.
17150 South Margay Ave. Carson, California 90746 U.S.A.
3036 Koapaka Street. Honolulu, Hawaii 96819 U.S.A.
SANSUI ELECTRONICS (U.K.) LTD.: Unit 10A, Lyon Industrial Estate, Rockware Avenue, Geenford, Middx UB6, OAA, England
SANSUI ELECTRONICS G.M.B.H.: Pau Ehrich Strasse 8, 6074 Rödermark 2, West Germany

**(SM1-186)** Printed in Japan (740420M) <Stock No. 36499600>

www.hifiengine.com