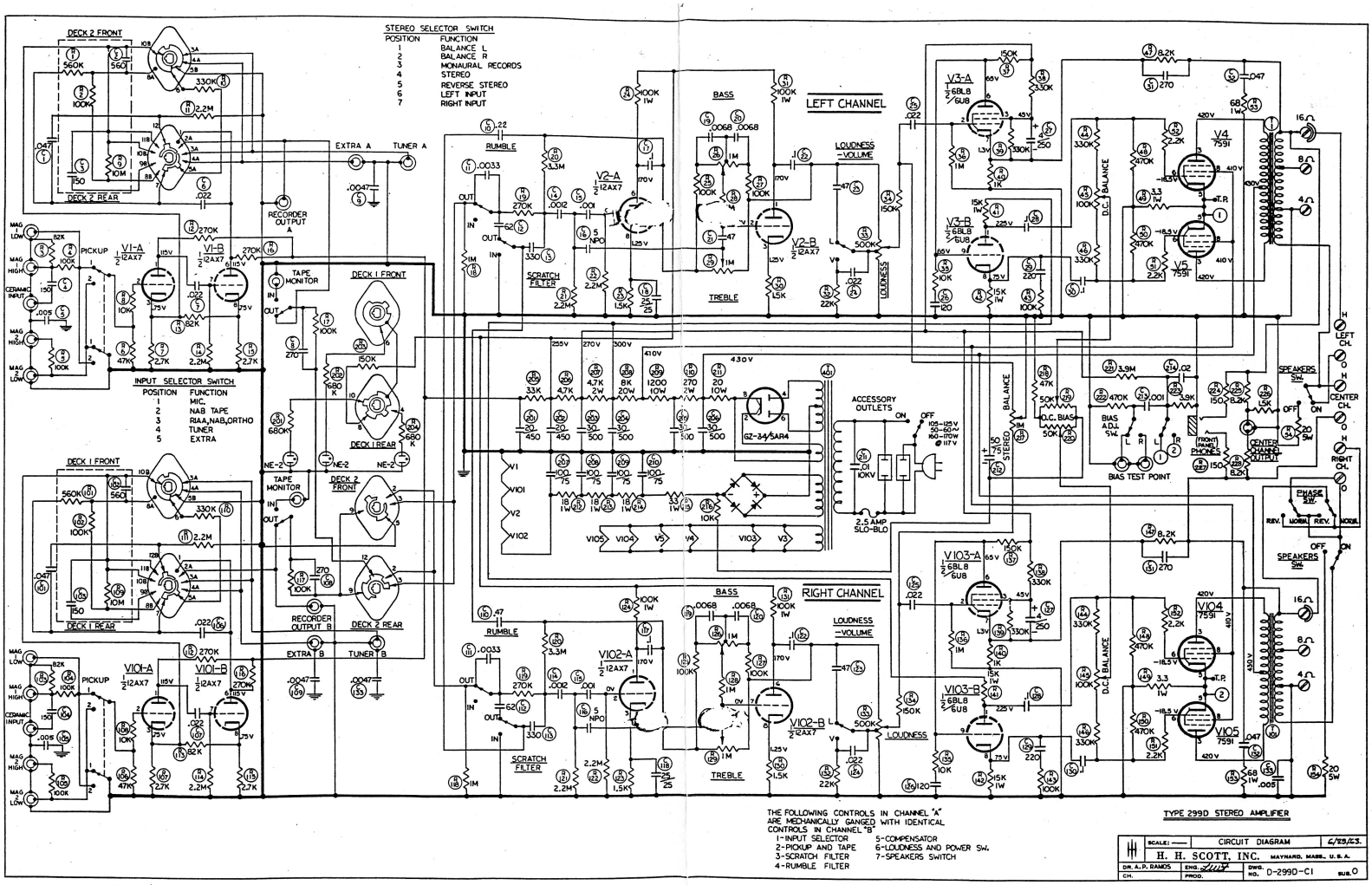
STEREO SELECTOR SWITCH
POSITION FUNCTION
1 BALANCE L
2 BALANCE R
3 MONAURAL RECORDS
4 STEREO
5 REVERSE STEREO
6 LEFT INPUT
7 RIGHT INPUT
INPUT SELECTOR SWITCH
POSITION FUNCTION
1 MIC.
2 NAB TAPE
3 RIAA,NAB,ORTHO
4 TUNER
5 EXTRA
LEFT CHANNEL
RIGHT CHANNEL
DECK 2 FRONT
DECK 2 REAR
DECK 1 FRONT
DECK 1 REAR
EXTRA A
TUNER A
EXTRA B
TUNER B
RECORDER OUTPUT A
RECORDER OUTPUT B
TAPE MONITOR
PICKUP
RUMBLE
SCRATCH FILTER
BASS
TREBLE
LOUDNESS
VOLUME
BALANCE
D.C. BALANCE
D.C. BIAS
BIAS ADJ. SW.
BIAS TEST POINT
ACCESSORY OUTLETS
2.5 AMP SLO-BLO
GZ-34/5AR4
STEREO
SPEAKERS SW.
CENTER CH.
LEFT CH.
RIGHT CH.
PHASE SW.
REV.
NORM.
OFF
ON
THE FOLLOWING CONTROLS IN CHANNEL "A" ARE MECHANICALLY GANGED WITH IDENTICAL CONTROLS IN CHANNEL "B"
1-INPUT SELECTOR
2-PICKUP AND TAPE
3-SCRATCH FILTER
4-RUMBLE FILTER
5-COMPENSATOR
6-LOUDNESS AND POWER SW.
7-SPEAKERS SWITCH
TYPE 299D STEREO AMPLIFIER
CIRCUIT DIAGRAM
H. H. SCOTT, INC.
MAYNARD, MASS., U.S.A.
DR. A.P. RAMOS
D-2990-C1