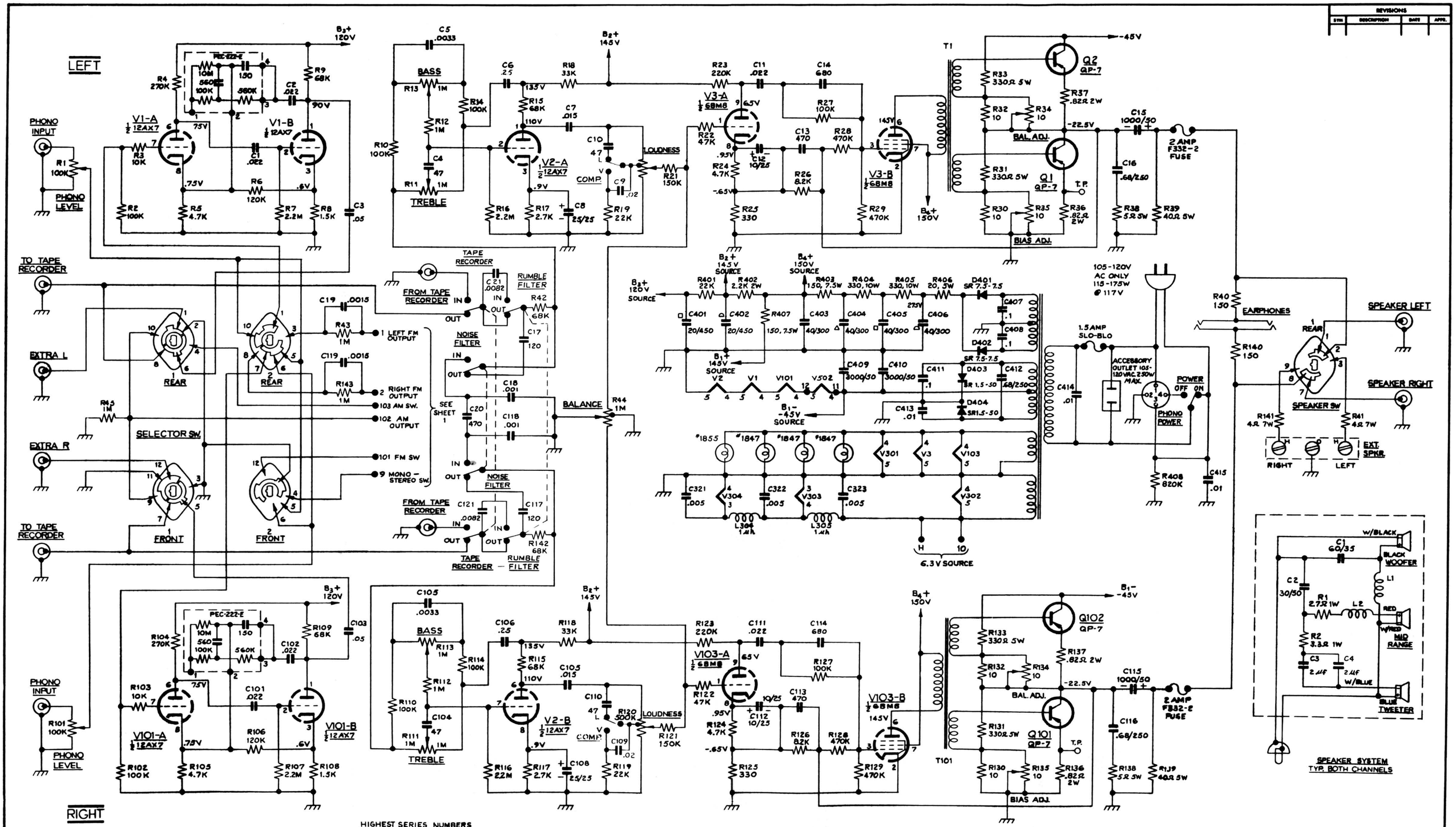

HIGHEST SERIES NUMBERS

C20	C119	C415	C321-C323
R45	R143	R408	L304-L305
T1	T101	D404	

C8, C108, C401, + C402 IN A SINGLE ENVELOPE.
C403, C404, C405, + C406 IN A SINGLE ENVELOPE.

NOT USED C120

EXETER PREAMP
AMPLIFIER, SPEAKERS

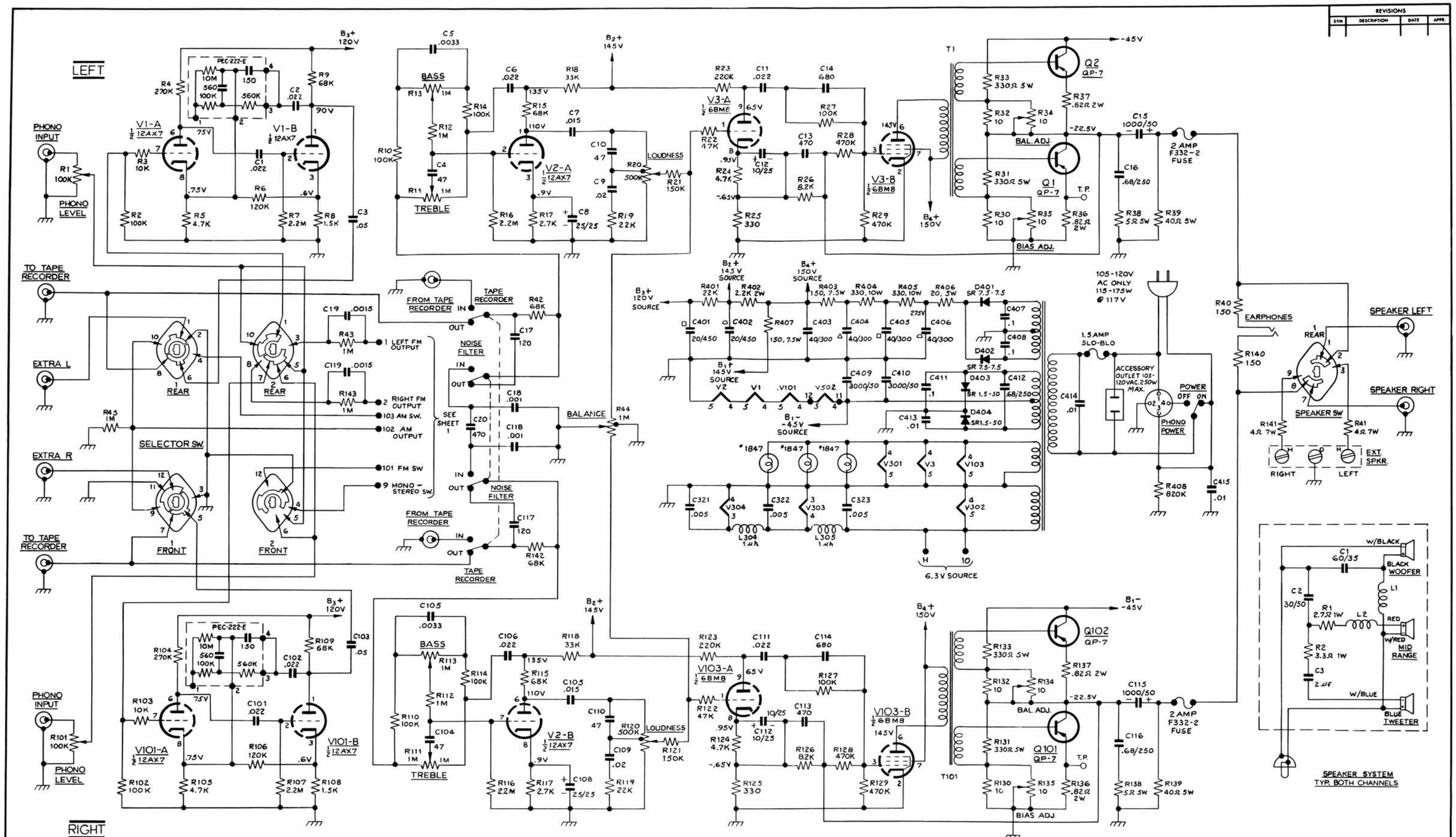

REVISIONS			
SYM	DESCRIPTION	DATE	APPR.

HIGHEST SERIES NUMBERS

C20	C119	C415	C321-C323
R45	R143	R408	L304-L305
T1	T101	D404	

C8, C108, C401, + C402 IN A SINGLE ENVELOPE.
C403, C404, C405, + C406 IN A SINGLE ENVELOPE.

BERKLEY PREAMP
AMPLIFIER, SPEAKERS

REVISIONS			
SYM	DESCRIPTION	DATE	APPR

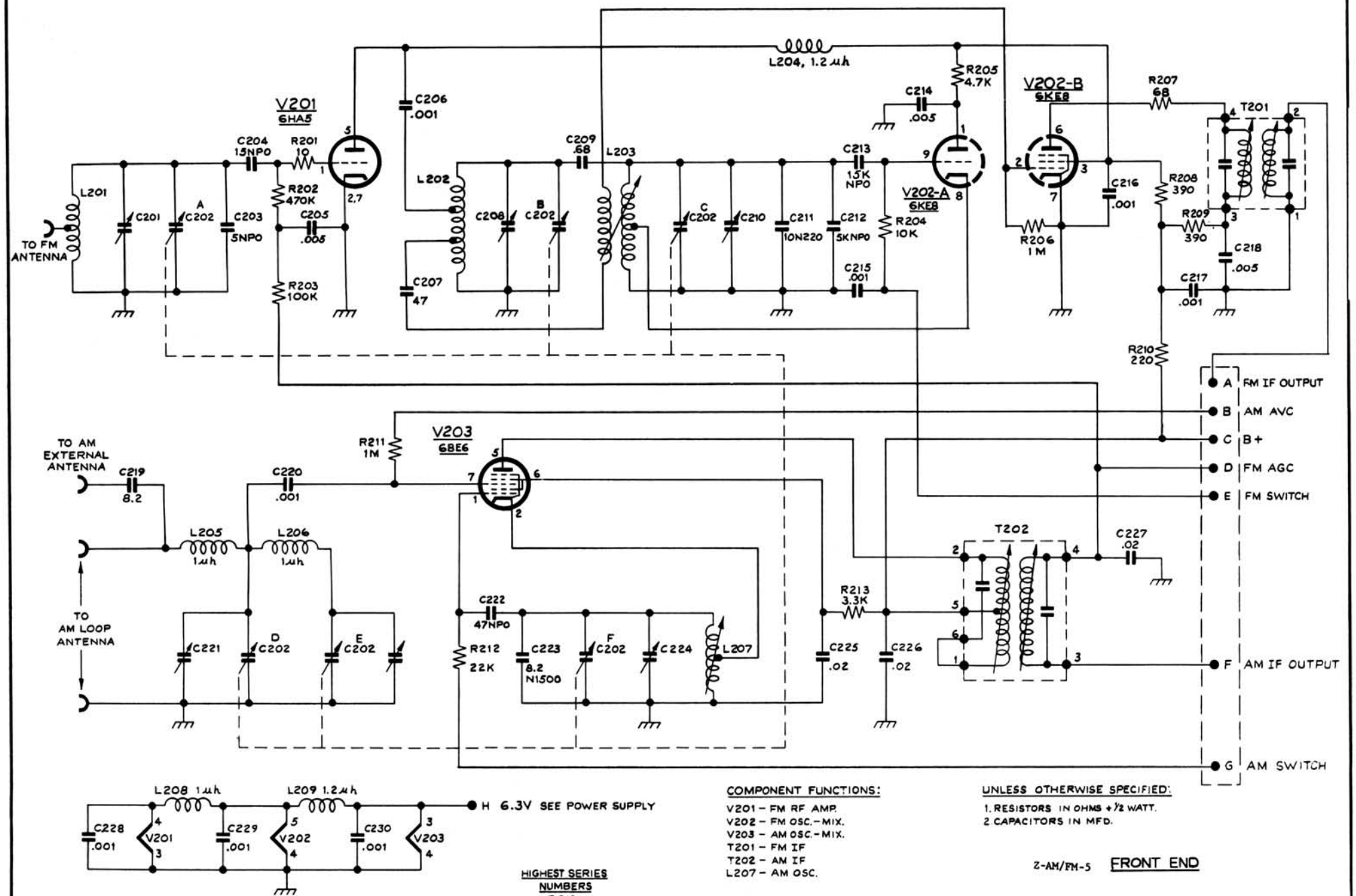

COMPONENT FUNCTIONS:

V201 – FM RF AMP.
V202 – FM OSC.-MIX.
V203 – AM OSC.-MIX.
T201 – FM IF
T202 – AM IF
L207 – AM OSC.

UNLESS OTHERWISE SPECIFIED:

1. RESISTORS IN OHMS + 1/2 WATT.
2. CAPACITORS IN MFD.

HIGHEST SERIES NUMBERS

R 213
C 230
T 201
L 209

Z-AM/FM-5 **FRONT END**

REVISIONS			
SYM	DESCRIPTION	DATE	APPR.

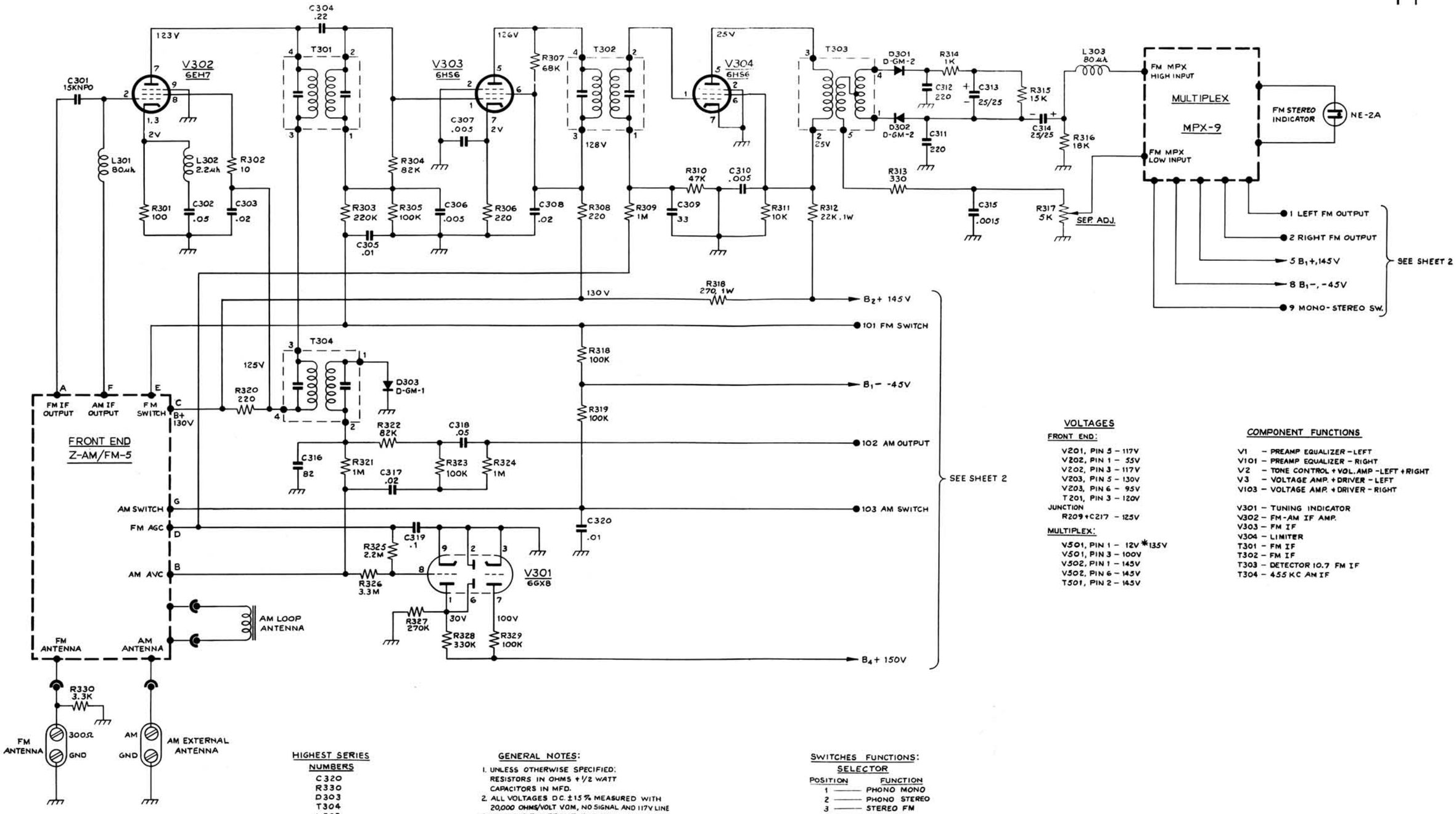

HIGHEST SERIES NUMBERS

C320
R330
D303
T304
L303

GENERAL NOTES:

1. UNLESS OTHERWISE SPECIFIED: RESISTORS IN OHMS +1/2 WATT CAPACITORS IN MFD.
2. ALL VOLTAGES D.C. ±15% MEASURED WITH 20,000 OHMS/VOLT VOM, NO SIGNAL AND 117V LINE
3. VOLTAGES FOR FRONT END MEASURED WITH SELECTOR SWITCH IN RESPECTIVE POSITION. (FM STEREO, AM)
4. * VOLTAGE WITH STEREO SIGNAL
5. THE FOLLOWING CONTROLS IN THE LEFT CHANNEL ARE MECHANICALLY GANGED WITH IDENTICAL CONTROLS IN THE RIGHT CHANNEL:
   1. SPEAKERS
   2. NOISE FILTER
   3. TAPE RECORDER
   4. LOUDNESS

SWITCHES FUNCTIONS:

SELECTOR

POSITION	FUNCTION
1	PHONO MONO
2	PHONO STEREO
3	STEREO FM
4	MONO FM
5	AM
6	EXTRA

SPEAKERS

1	INTERNAL
2	INT.-EXT.
3	EXTERNAL
4	OFF

VOLTAGES

FRONT END:

V201, PIN 5 – 117V
V202, PIN 1 – 55V
V202, PIN 3 – 117V
V203, PIN 5 – 130V
V203, PIN 6 – 95V
T201, PIN 3 – 120V

JUNCTION
R209+C217 – 125V

MULTIPLEX:

V501, PIN 1 – 12V *135V
V501, PIN 3 – 100V
V502, PIN 1 – 145V
V502, PIN 6 – 145V
T501, PIN 2 – 145V

COMPONENT FUNCTIONS

V1 – PREAMP EQUALIZER – LEFT
V101 – PREAMP EQUALIZER – RIGHT
V2 – TONE CONTROL + VOL. AMP – LEFT + RIGHT
V3 – VOLTAGE AMP. + DRIVER – LEFT
V103 – VOLTAGE AMP. + DRIVER – RIGHT

V301 – TUNING INDICATOR
V302 – FM-AM IF AMP.
V303 – FM IF
V304 – LIMITER
T301 – FM IF
T302 – FM IF
T303 – DETECTOR 10.7 FM IF
T304 – 455 KC AM IF

BERKLEY/EXETER TUNER

REVISIONS			
SYM	DESCRIPTION	DATE	APPR

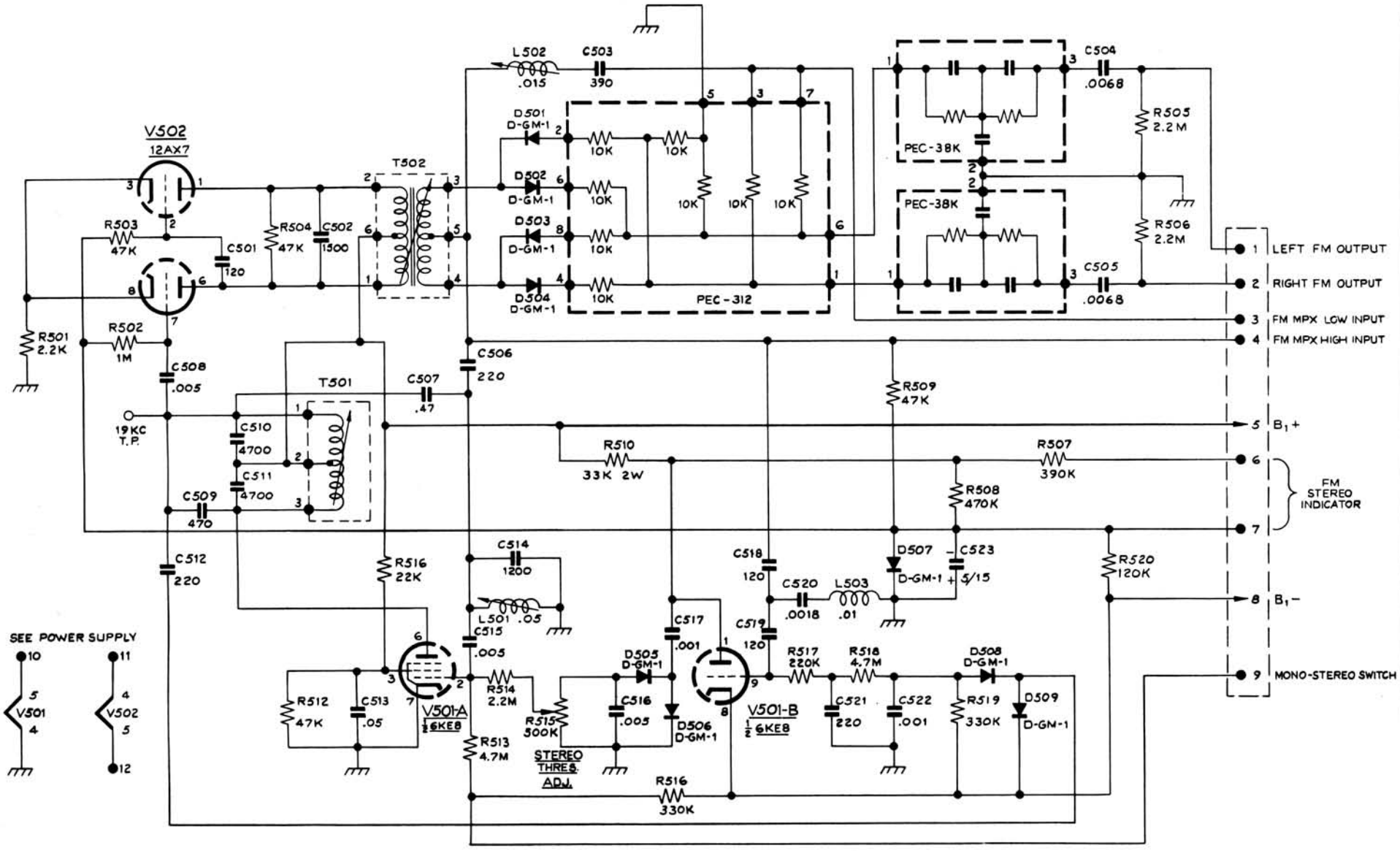

HIGHEST SERIES NUMBERS

R520
C522
D509
L503
T502

UNLESS OTHERWISE SPECIFIED:

1. RESISTORS IN OHMS + ½ WATT.
2. CAPACITORS IN MFD.

COMPONENT FUNCTIONS:

V501 – COMP. SYNC. AMP.
V502 – OSCILLATOR
T501 – 19KC FILTER
T502 – 38KC OSC.
L501 – 19KC TRAP
L502 – SCA TRAP

Z-MX-9 **MULTIPLEX**