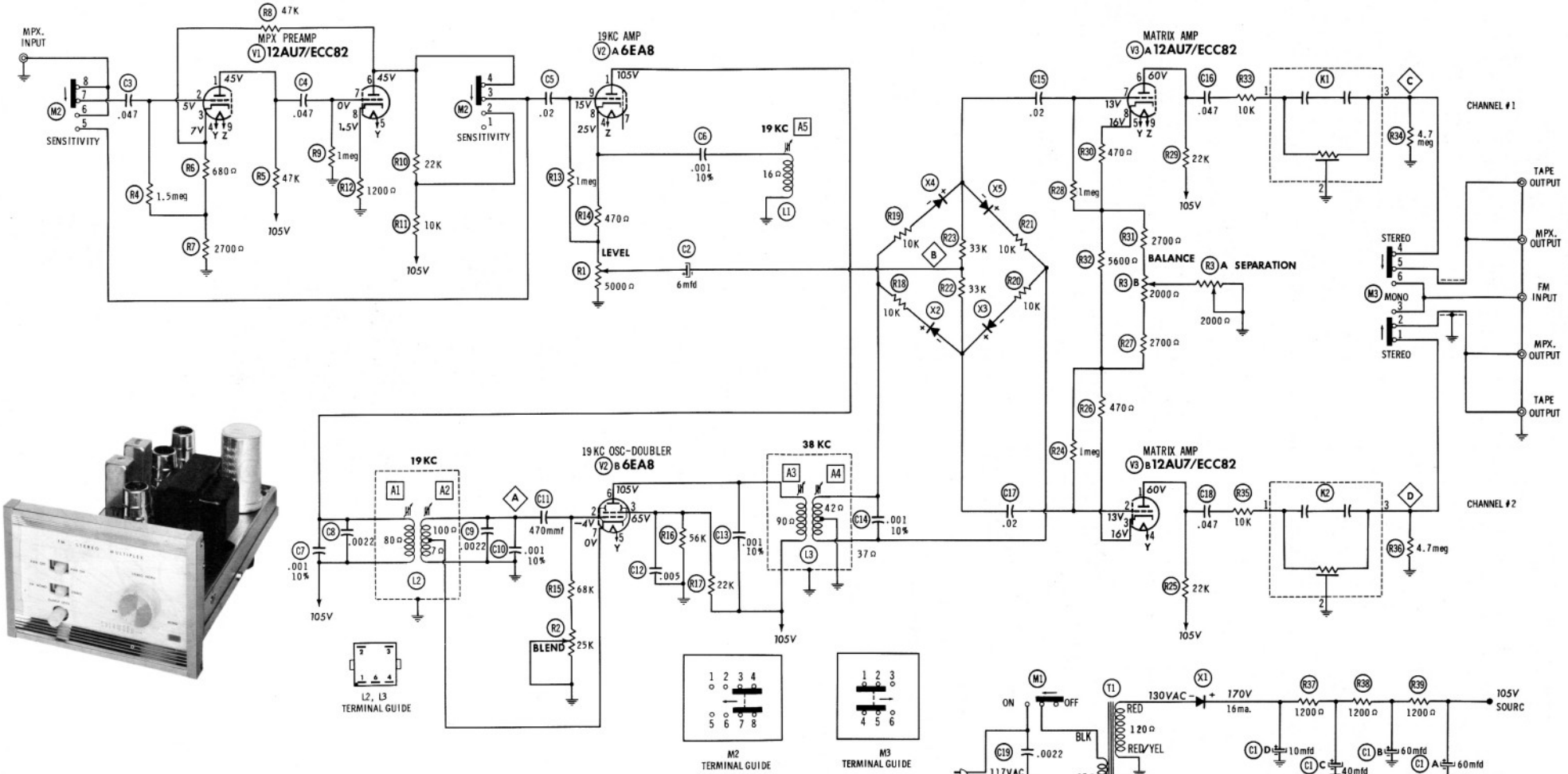

MULTIPLEX ALIGNMENT USING FM STEREO GENERATOR

	SIGNAL GENERATOR	CONNECT SCOPE	ADJUST	REMARKS
1.	19KC into Multiplex input jack, low side to chassis.	Vert. amp. to point (A), low side to chassis.	A1, A2	Adjust for maximum deflection. Set scope to lock in 2-cycle waveform.
2.	"	Vert. amp. to point (B), low side to chassis.	A3, A4	Adjust for maximum deflection of 4-cycle waveform.
3.	"	"	A5	Adjust for MINIMUM deflection.
4.	"	Vert. amp. to point (C), Horiz. to point (D), low sides to chassis.	R3	Adjust maximum clockwise & counterclockwise to produce diagonal responses shown in Fig. 1. Set at point producing round portion of pattern.

FIG. 1

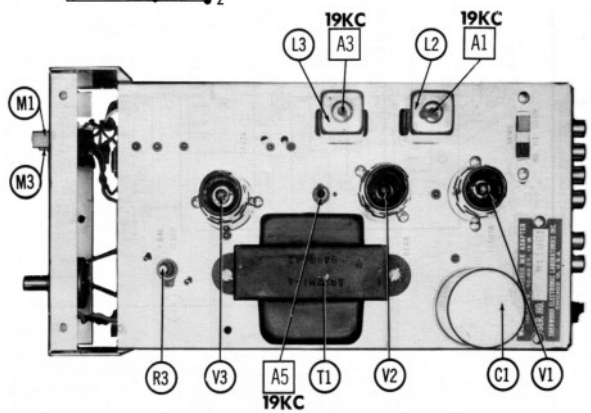

SHERWOOD S3MX