SERVICE MANUAL

STEREO

MOSFET Power Amplifier S6040CP

CONTENTS

SPECIFICATIONS.....2
BLOCK DIAGRAM.....2
ELECTRICAL ADJUSTMENT PROCEDURE.....3, 4
TOP VIEW OF P. C. BOARDS.....5
PARTS LIST.....6
EXPLODED VIEW OF CABINET AND CHASSIS.....7, 8
PARTS LIST ACCORDING TO EXPLODED VIEW.....8
POINT TO POINT WIRING DIAGRAM.....9, 10
SCHEMATIC DIAGRAM.....11, 12
NOTES.....13

SPECIFICATIONS

POWER OUTPUT, Continuous RMS with no more than 0.03% THD	
at 4 ohms, 1 KHz	160 W
at 8 ohms, 1 KHz	120 W
at 8 ohms, 20-20,000 Hz	100 W
INTERMODULATION DISTORTION, 60 Hz: 7 KHz = 4:1 SMPTE	
100 W output into 8 ohms	0.03%
DAMPING FACTOR at 1 KHz, 8 ohms	90
INPUT SENSITIVITY for 100 W output, 8 ohms at 1 KHz	1 V
FREQUENCY RESPONSE' –3 dB, with built-in LPF	DC–40 KHz
without LPF	DC–200 KHz
SIGNAL TO NOISE RATIO, Unweighted	95 dB
IHF "A" weighted	110 dB
CHANNEL SEPARATION, at 1 KHz, input shorted	55 dB
POWER CONSUMPTION	55– 650 Watts
UNIT DIMENSIONS (W x H x D)	440(W) x 110(H) x 350(D)mm 17 3/16(W) x 4 1/4(H) x 10(D) inches
UNIT WEIGHT	14 Kg/31 Lbs.

NOTE : Design and specifications subject to change without notice for improvements.

BLOCK DIAGRAM

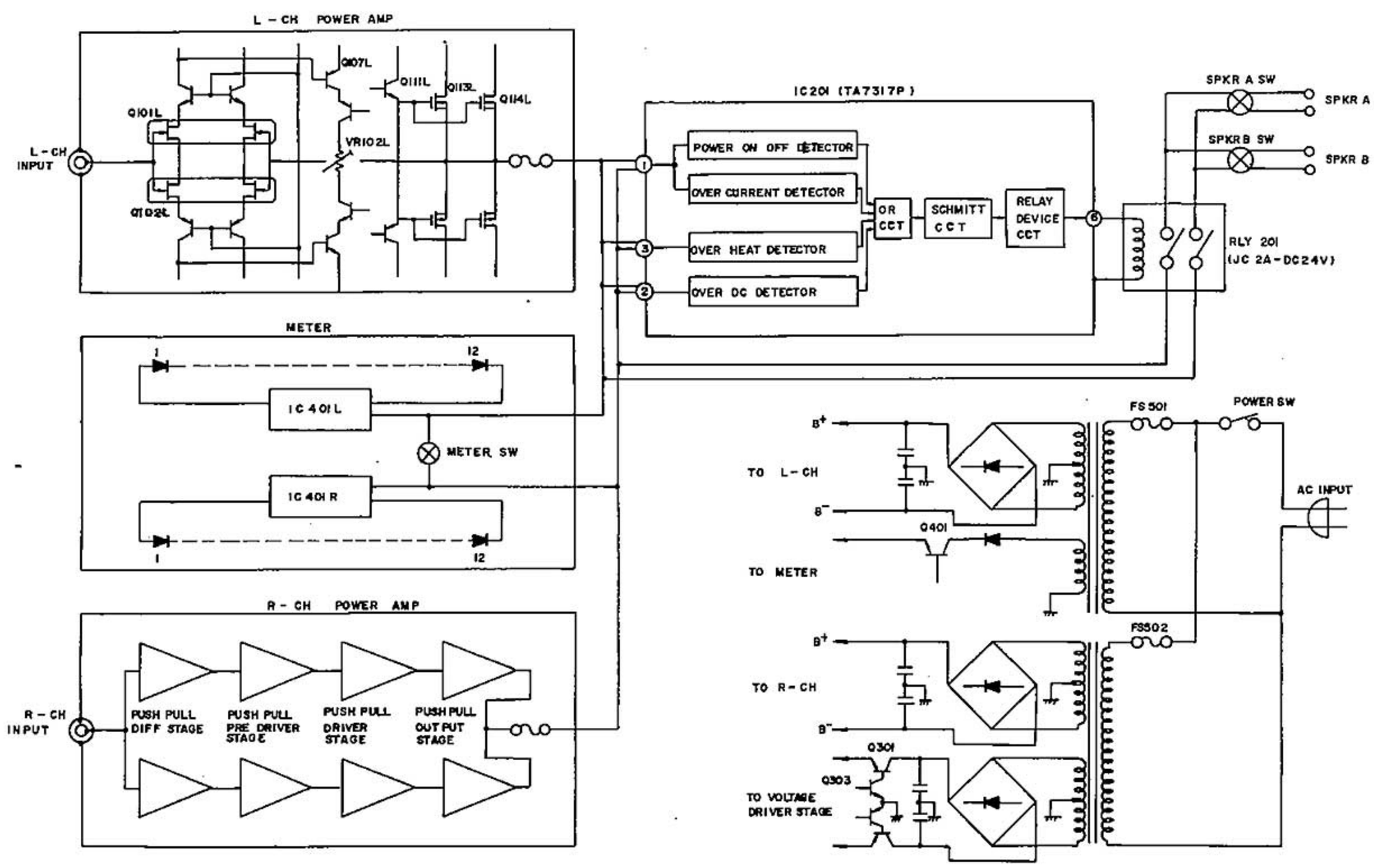

ELECTRICAL ADJUSTMENT PROCEDURE

HOW TO CHECK POWER MOS FETS WITH A CIRCUIT TESTER

The quick methods to check POWER MOS FET with a circuit tester are described here.

Gate to Source

Check the nonconductivity between Gate and Source in both polarity by using the resistance range of a tester.

Drain to Source (The following procedure is based N channel devices)

(1) Set a tester to a resistance range. (x 1Ω)

(2) As shown in Fig.1, connect the plus wire (The color is red. The minus voltage from built-in cell is on the wire.) to Source, and connect the minus wire to Gate. (The color is black.) Therefore, gate is charged by plus (forward bias).

(3) Then, moving the minus wire and connect it Drain. The tester should show conductivity.

(4) Next step. As shown in Fig.2, connect the minus wire to Source and the plus wire to Gate. Therefore, Gate is charged by minus (reverse bias).

(5) Then, connect the minus wire to Drain and the plus wire to Source. This time, the tester should indicate nonconductivity. With the procedure mentioned above, it is checked that the device is normal.
By connecting the plus wire to Drain, and the minus wire to Source, the tester should indicate conductivity. If the connection is in reverse, the tester should indicate nonconductivity, since the connection of Drain and Source is in reverse, there is the equivalent Diode between Drain and Source.
Therefore, the phenomena is quite normal.
For P-channel device, the same procedure can be run with the reverse connection of plus and minus wires of tester.

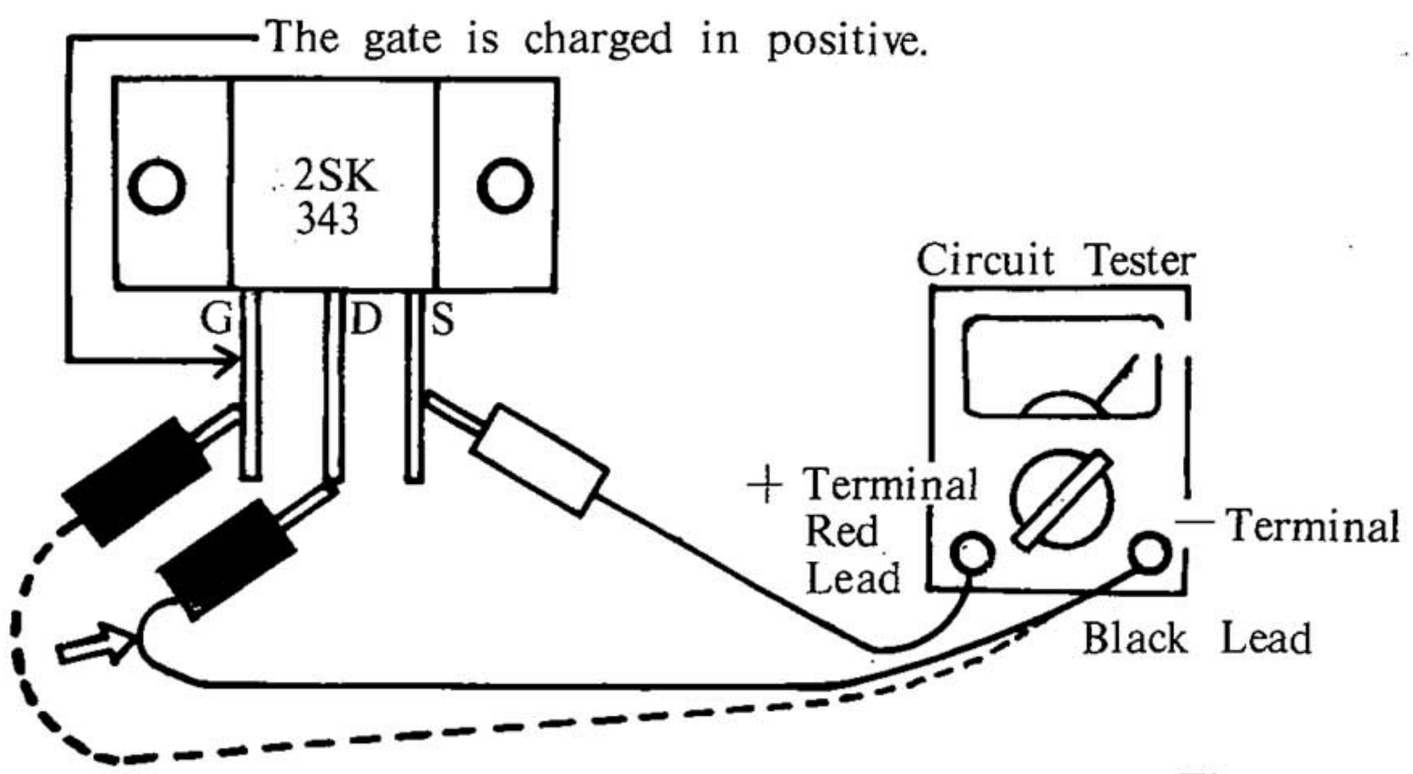

Fig. 1.

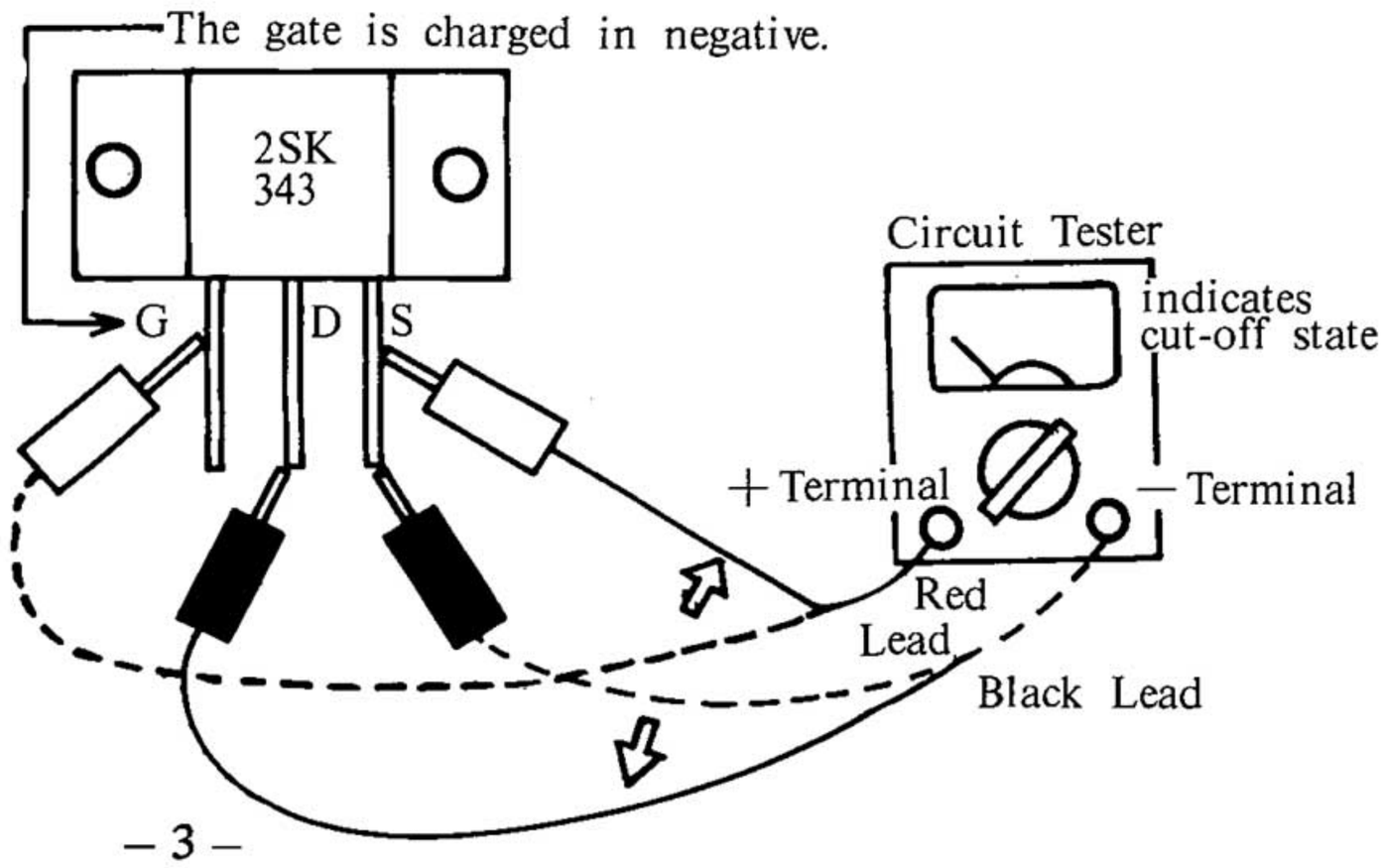

Fig. 2.

ELECTRICAL ADJUSTMENT PROCEDURE

DC OFFSET VOLTAGE AND IDLE CURRENT ALIGNMENT

Set the SPEAKERS selector to the A position and connect an 8Ω load. Keep input jacks free, turn the power on and wait about 10 minutes.

A. DC neutral voltage adjustment —Fig. 1

a. Connect DC Voltmeter to No. 6 speaker terminal of power amplifier assembly and ground it to chassis.

b. Adjust potentiometer VR101L 470Ω until voltmeter indicates 0V±70mV.

* Similary, adjust VR101R 470Ω so that the voltage between ground and No. 8 terminal may become same value as above.

B. Idle current adjustment —Fig. 2

a. Connect DC Voltmeter between the source of transistor Q114L (or Q113L) and the source of transistor Q116L (or Q115L).

b. Adjust potentiometer VR102L 470Ω so that voltmeter may read the value ranged from 15mV to 20mV.

* Similary, adjust VR102R 470Ω so that the voltage between the source of transistor Q114R (Q113R) and the source of transistor Q116R (or Q115R) may become same value as above.

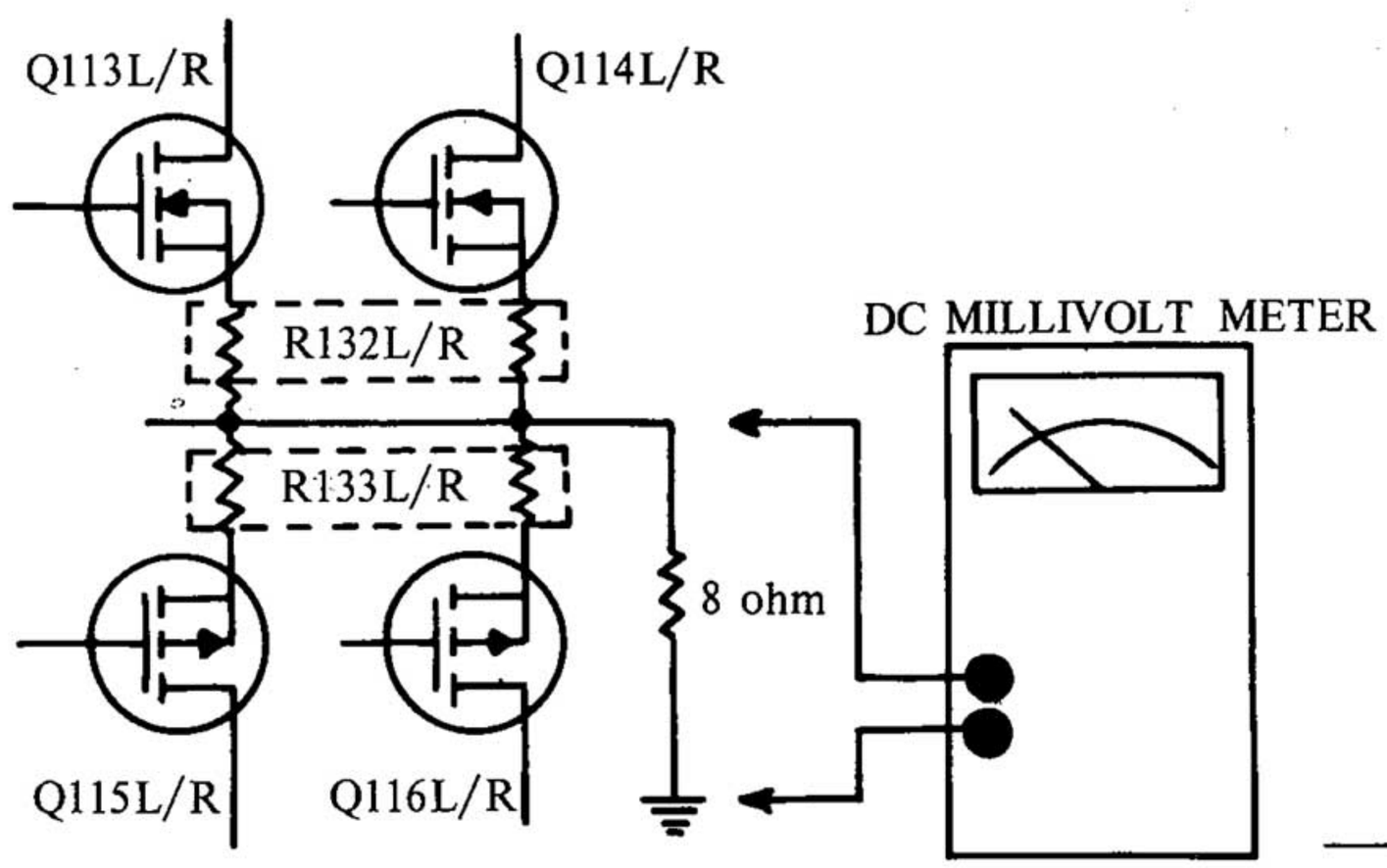

Fig. 1

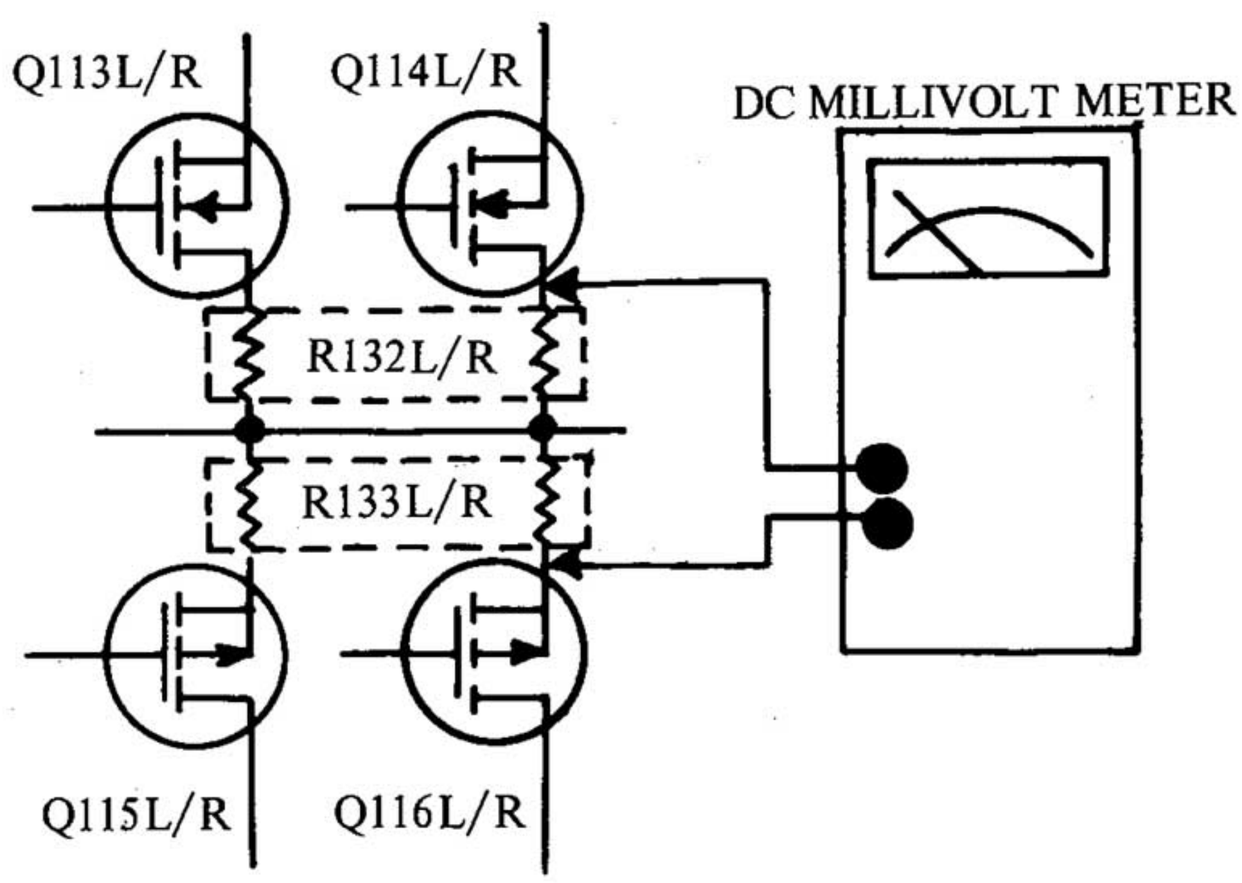

Fig. 2

TOP VIEW OF P.C. BOARDS

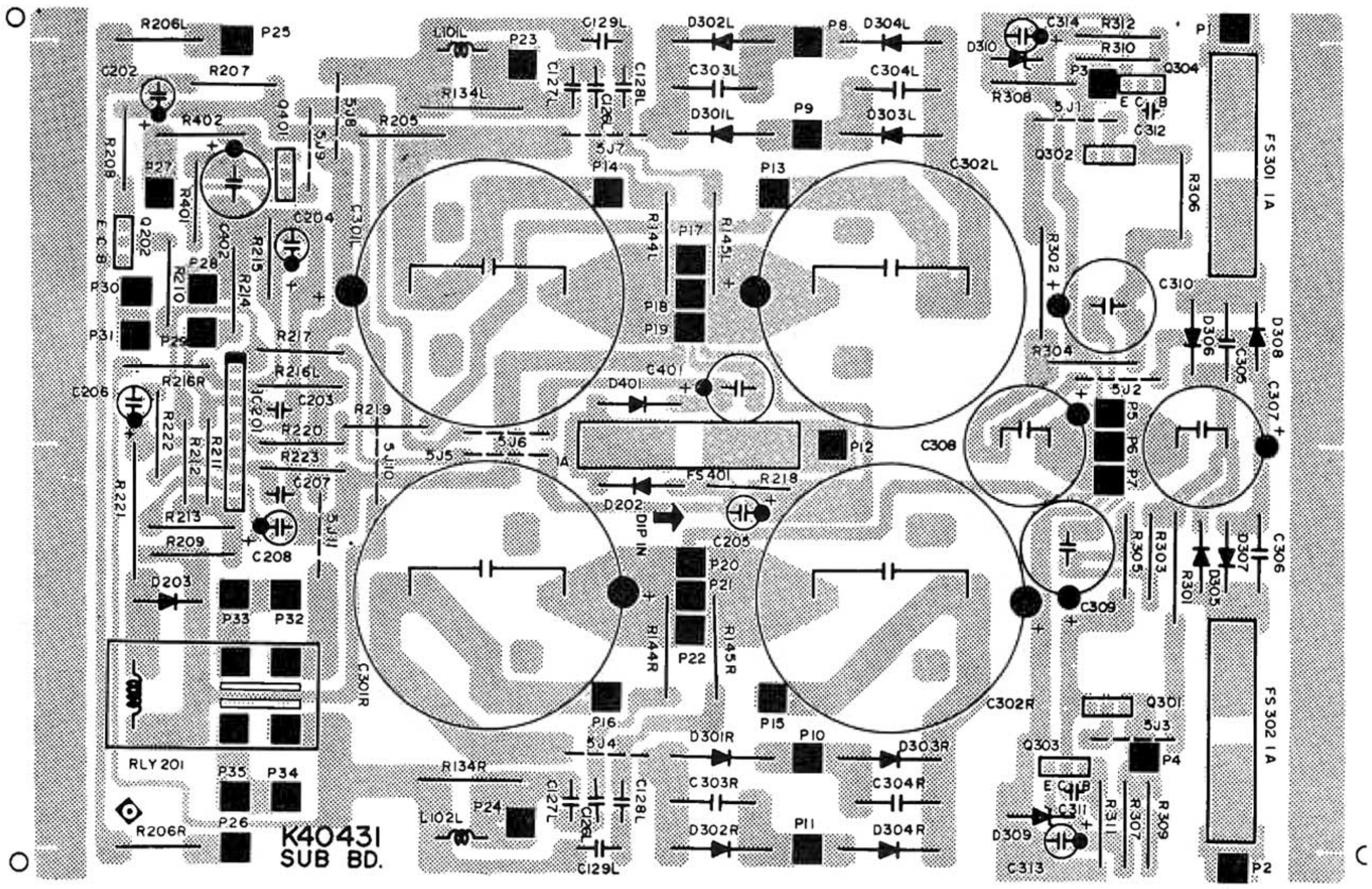

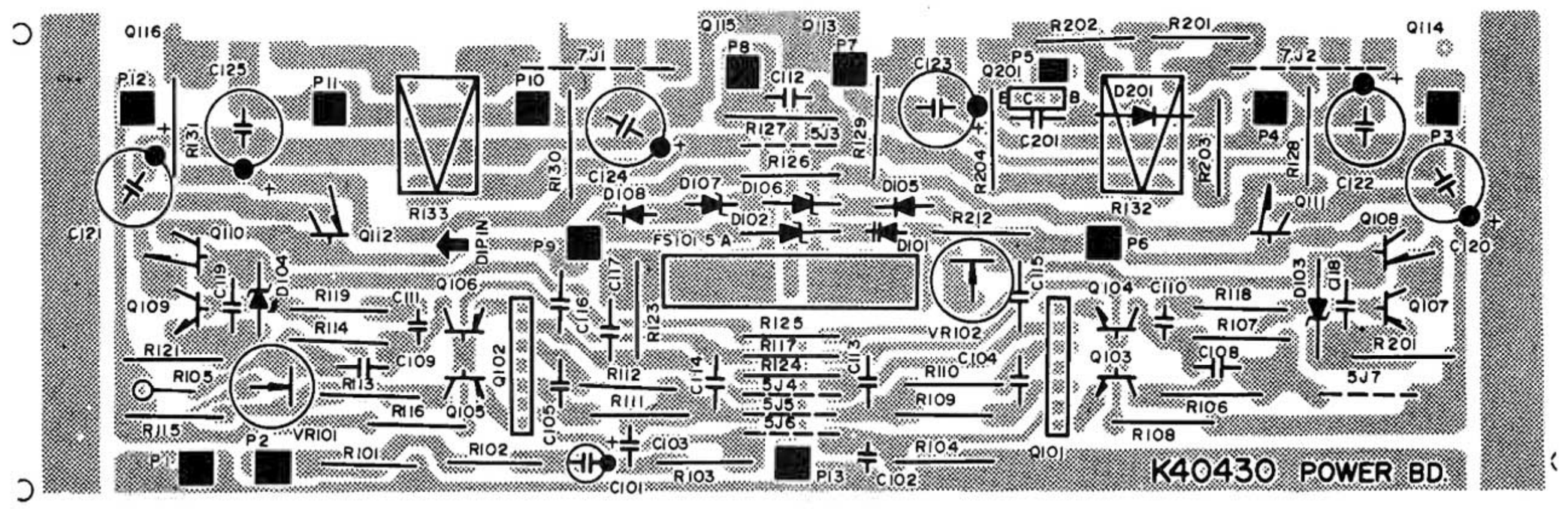

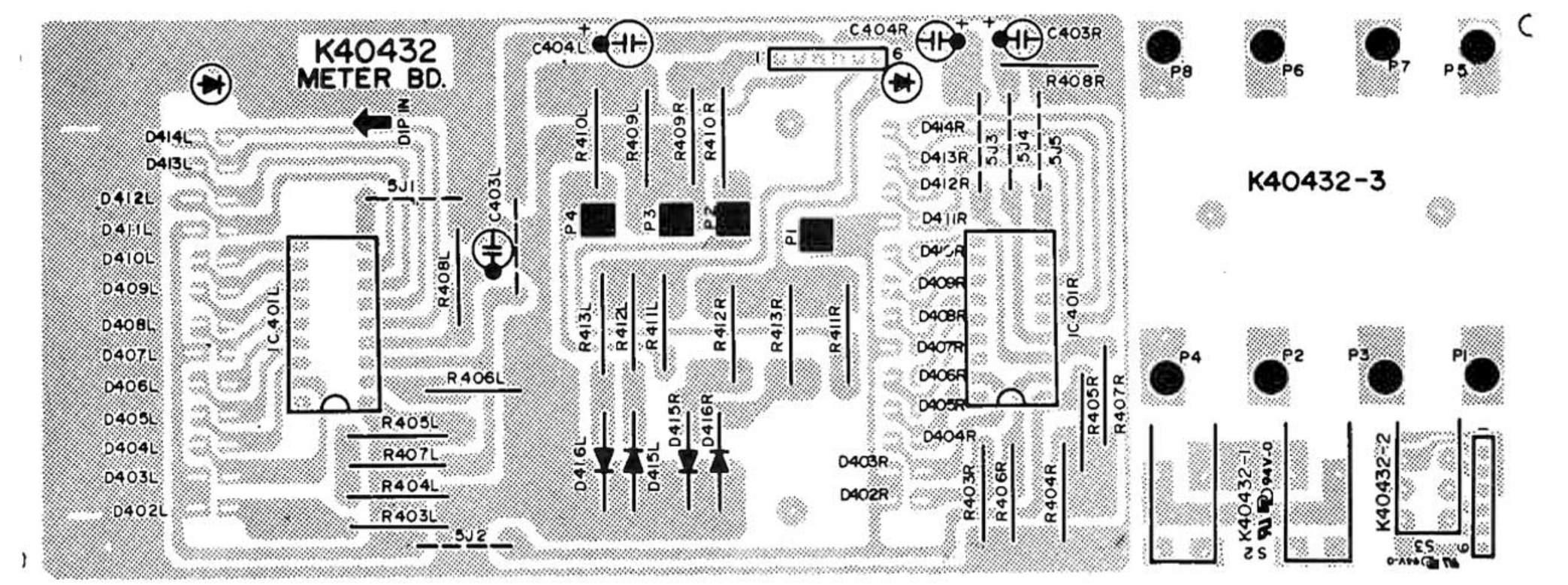

PARTS LIST

Ref. No.	Parts No.	Description	Q'ty
K40430 POWER BOARD			
Q101L/R		FET 2SK270A-BL(N-Channel)	2
Q102L/R		FET 2SJ 90A-BL(P-Channel)	2
Q103L/R		Transistor 2SC2240 BL	8
Q104L/R			
Q109L/R			
Q201L/R			
Q105L/R		Transistor 2SA970 BL	6
Q106L/R			
Q107L/R			
Q108L/R		Transistor 2SA968Y	4
Q112L/R			
Q110L/R		Transistor 2SC2238Y	4
Q111L/R			
Q113L/R		FET 2SK343(N-Channel)	4
Q114L/R			
Q115L/R		FET 2SJ99(P-Channel)	4
Q116L/R			
D101L/R		Diode STV-3H-G	2
D102L/R		Diode Zener WZ061	2
D103L/R		Diode Zener WZ032	4
D104L/R			
D105L/R		Diode CDG24 or MA150	6
D108L/R			
D201L/R			
D106L/R		Diode Zener WZ090	4
D107L/R			
VR101L/R	PE-16008	Semifixed Resistor 470(B)	4
VR102L/R			
R127L/R	60M222-2J	Resistor Metal Oxide 2.2Kohm 2W(J)	2
R132L/R	ERF-50GEKR27N	Resistor Cement 0.27 ohm 5W(K)	4
R133L/R			
C120L/R	50AL470-100E	Capacitor Elect 47μF/100WV	12
C121L/R			
C122L/R			
C123L/R			
C124L/R			
C125L/R			
FS101L/R	36BST5-250	Speaker Fuse Fast Blow F5A/250V (20mm) For EU, SAA	2
	36AST6-250	Speaker Fuse STD 6A/250V (31.8mm) For UL, CSA	2
K40431 SUB BOARD			
Q202, Q304		Transistor 2SA970BL	2
Q301		Transistor 2SD880Y	1
Q302		Transistor 2SA490Y	1
Q303		Transistor 2SC 2240BL	1
Q401		Transistor MPS9418A-S	1
D202, D203		Diode Rect. 1N4002(1A100V)	3
D401			
D301L/R		Diode Rect. P300D(3A200V)	8
D302L/R			
D303L/R			
D304L/R			

Ref. No.	Parts No.	Description
D305, D306		Diode Rect. 1N4003(1A200V)
D307, D308		
D309, D310		Diode Zener WZ240
IC201		IC TA7317P(Protection)
L101L/R	PE-30152	Coil Inductor 0.5μH
R134L/R	60M100-1J	Resistor Metal Oxide 10ohm 1W(J
R301, R302		
R144L/R	60M100-2J	Resistor Metal Oxide 10ohm 2W(J
R145L/R		
R221	60M681-3J	Resistor Metal Oxide 680ohm 3W(
C301L/R	50AL103-63E	Capacitor Elect. 10,000μF/63WV
C302L/R		
C303L/R	50MY334-150J	Capacitor Mylar 0.33μF/150WV
C304L/R		
C305, C306	50CE103-500J	Capacitor Ceramic 0.01μF/500WV
C307, C308	50AL471-100E	Capacitor Elect. 470μF/100WV
C309, C310	50AL101-100E	Capacitor Elect. 100μF/100WV
RLY201	JC2A-DC24V	Relay
FS301, FS302	36BSB0.5-250	Secondary Fuse Time Lag T500m/
FS401		250V(20mm) For EU, SAA
	36AST1-250	Secondary Fuse STD 1A/250V (31.8mm) For UL, CSA
K40432 METER BOARD		
D402L/R		Diode LED KLR-205E(RED)
D403L/R		
D404L/R		
D405L/R		
D406L/R		
D407L/R		
D408L/R		
D409L/R		
D410L/R		
D411L/R		
D412L/R		
D413L/R		
D414L/R		
D415L/R		Diode 1N60(Pair)
D416L/R		
IC401L/R		IC BA681A(Meter)
CHASSIS MTG		
	PD-35209	Power Transformer
	PD-35210	Power Transformer
P201, P202		Posistor PTH487 A01 BE222TS
R501L/R	60M470-1J	Resistor Metal Oxide 47ohm 1W(J
C501	DE7150F472MVA1	Capacitor Ceramic 0.0047μF/400V/
FS501L/R	36BSB2-250	Primary Fuse Time Lag T2A/250V (20mm) For EU, SAA
	36AST3.5-250	Primary Fuse STD 3.5A/250V (31.8mm) For UL, CSA
	PD-35216	Power Transformer
	PD-35217	Power Transformer For CSA Model Only

EPLODED VIEW OF CABINET AND CHASSIS

PARTS LIST ACCORDING TO EXPLODED VIEW

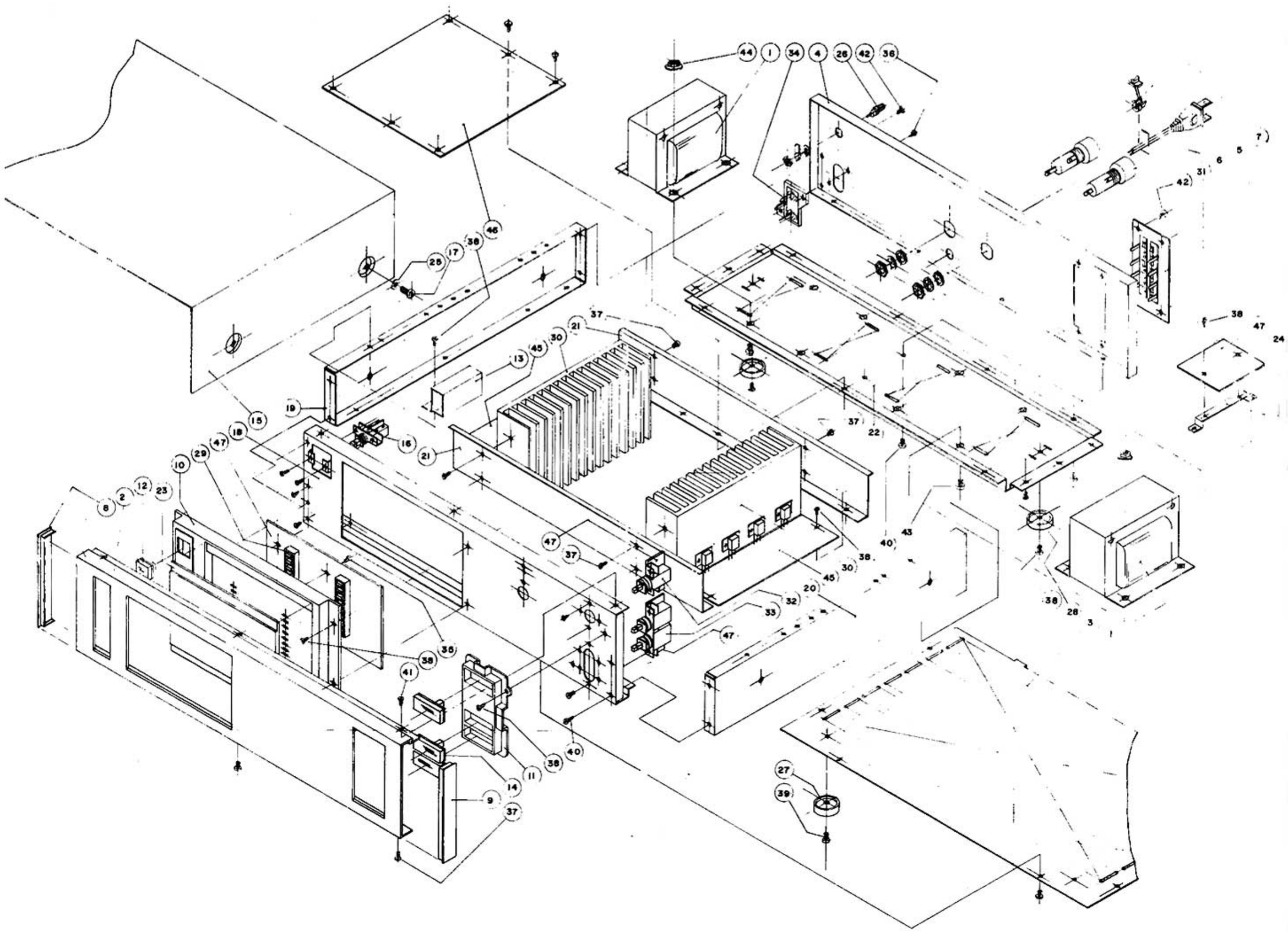

NO.	PARTS NO.	DESCRIPTION.	Q'TY
1	PD-35209	POWER TRANSFORMER	1
2	PC-61133-01	FRONT PANEL	1
3	PC-62497A-02	BOTTOM COVER For CSA	1
	PC-62497-01	BOTTOM COVER For UL, EU, SAA	1
4	PC-62498C-02	BACK CH. For UL, CSA, EU	1
	PC-62498C-03	BACK CH. For SAA	1
5	PD-67045-02	POWER CORD For UL, CSA	1
	PE-67098	POWER CORD For EU	1
	PE-67054	POWER CORD For SAA	1
6	PE-69099	FUSE HOLDER FOR UL, CSA	2
	PE-69082	FUSE HOLDER For EU, SAA	2
7	PE-71008A	CORD STOPPER For UL, CSA, EU	1
	PE-71050	CORD STOPPER For SAA	1
8	PE-71308-01	END CAP(L)	1
9	PE-71308-02	END CAP(R)	1
10	PC-71309-01	LED METER BODY	1
11	PD-71310	PUSH BEZEL	1
12	AE-72329-1/2	POWER KNOB ASS'Y	1
13	PE-71347A	POWER SW COVER	1
14	AE-72343-1/2	PUSH KNOB ASS'Y	3
15	PC-74378A-01	STEEL CABINET	1
16	PE-90336	POWER SW For UL, CSA	1
	PE-90303	POWER SW For EU, SAA	1
17		SCREW WPM4×10B	4
18	PC-62493	FRONT CH.	1
19	PC-62494-03	MAIN FRAME(L)	1

NO.	PARTS NO.	DESCRIPTION	Q'TY
20	PC-62494-04	MAIN FRAME(R)	1
21	PC-62494A	POWER B'D FRAME	2
22	PC-62496	TRANSFORMER CH.	1
23	PE-63173	METER WINDOW	1
24	PE-68810	TERMINAL B'D BKT	1
25	PE-70046	VINYL WASHER	4
26	AD-70052	SYSTEM GND	1
27	PE-71175	FOOT	2
28	PE-71227	FOOT	2
29	PD-71311	METER LED SPACER	2
30	PD-73088A	HEATSINK POWER	2
31	PE-76006	SP TERMINAL	1
32	PE-90325	PUSH SW(1 KEY)	1
33	PE-90337	PUSH SW(2 KEY)	1
34	PE-95047	RCA JACK(2P)	1
35		SCREW #1 RT 2.6×8	4
36		SCREW #1 PT3×8B	2
37		SCREW #2 BTC 3×8	30
38		SCREW #2 WPTC 3×8	19
39		SCREW #2 BTC 3×12	2
40		SCREW #3 BTC 3×6	26
41		SCREW #3 FTC 3×8	3
42		SCREW #3 PTC 3×8B	10
43		SCREW BM4 ×10	8
44		NUT FLANGE M4	8

POINT TO POINT WIRING DIAGRAM

※ AC Power Supply Connections around Transformer according to Safety Regulation

UL MODEL Only

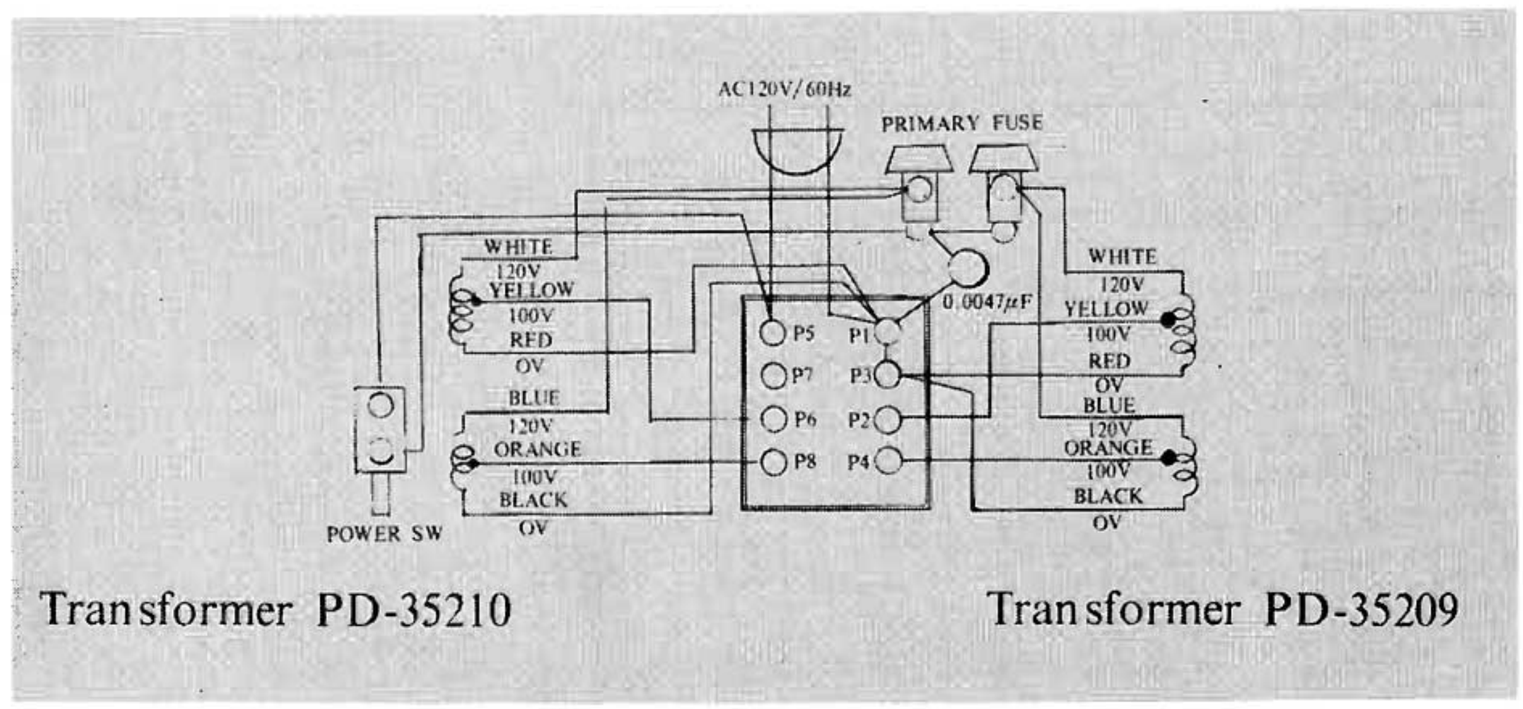

EU MODEL Only

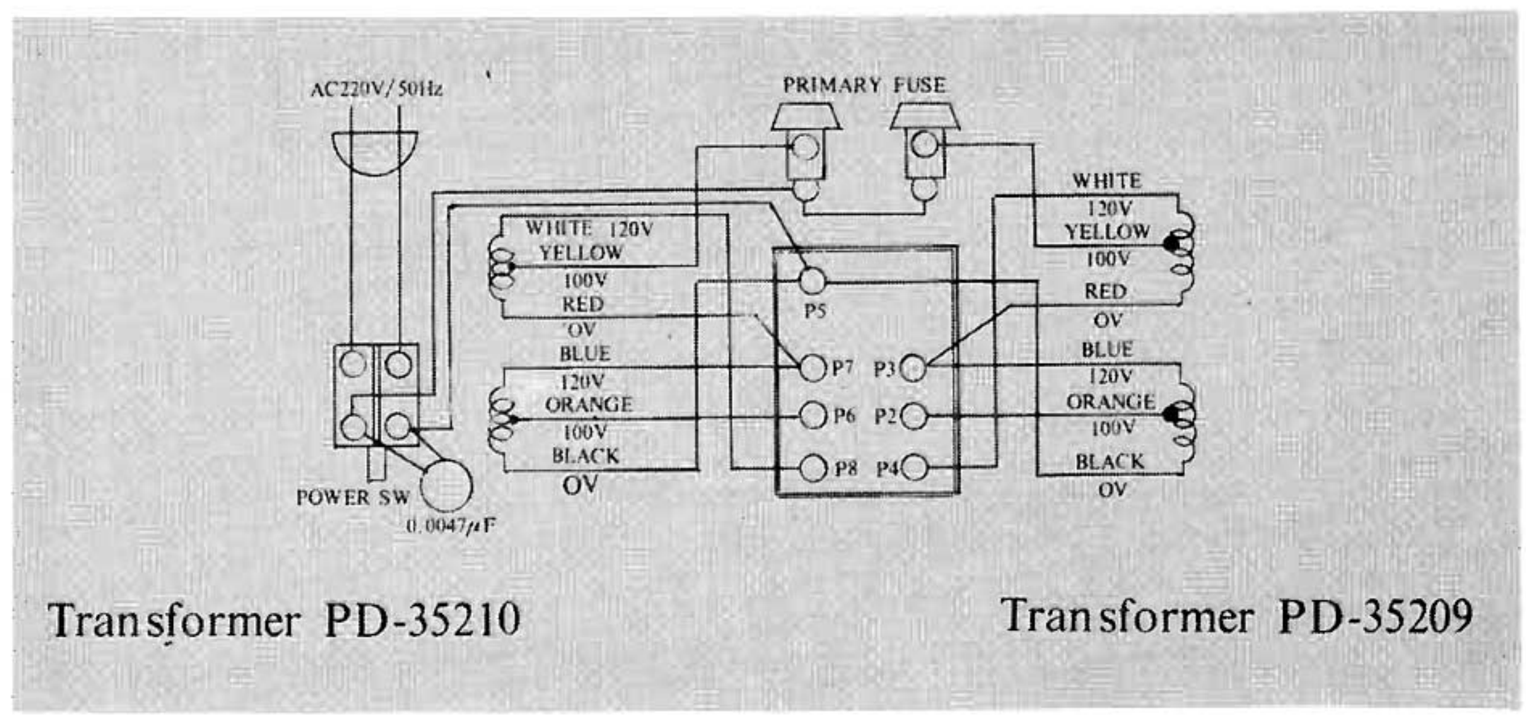

BS. SAA MODEL Only

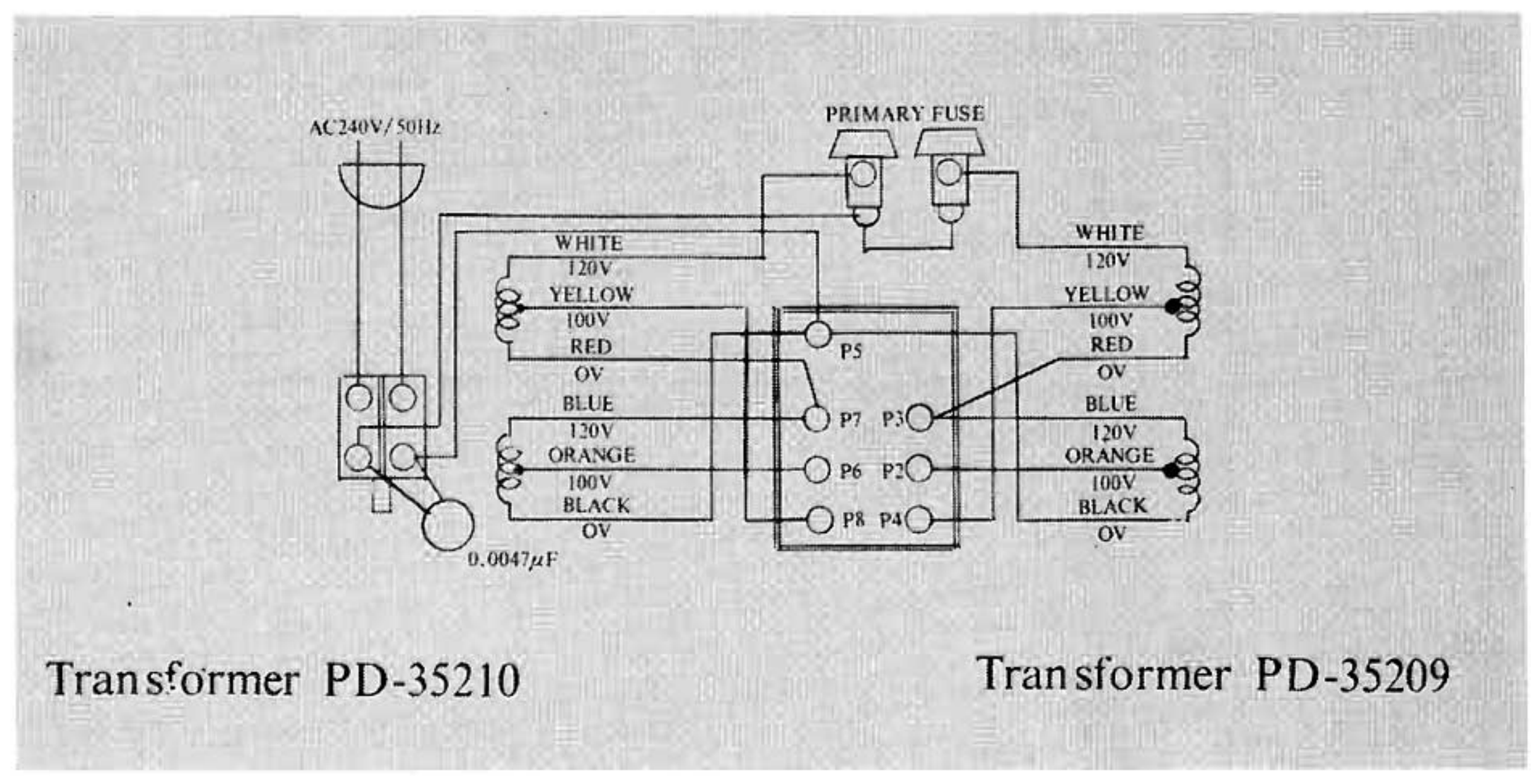

NOTE:

AS to U. L., C. S. A., B. S., S. A. A and EU marked in the parts lists, note the followings;

U. L., C. S. A.....Approved parts used in the unit which is applicable to U. S. A. and Canada under safety requirement.(AC 120V 50/60Hz)

B. S., S. A. A.....Approved parts used in the unit which is applicable to British and Australia under safety requirement.(AC 240V/50Hz)

E. U.....Approved parts used in the unit which is applicable to West Germany, France, Italy, Sweden, Denmark, Norway, Switzerland, etc. under safety requirement. (AC 220V/50Hz)

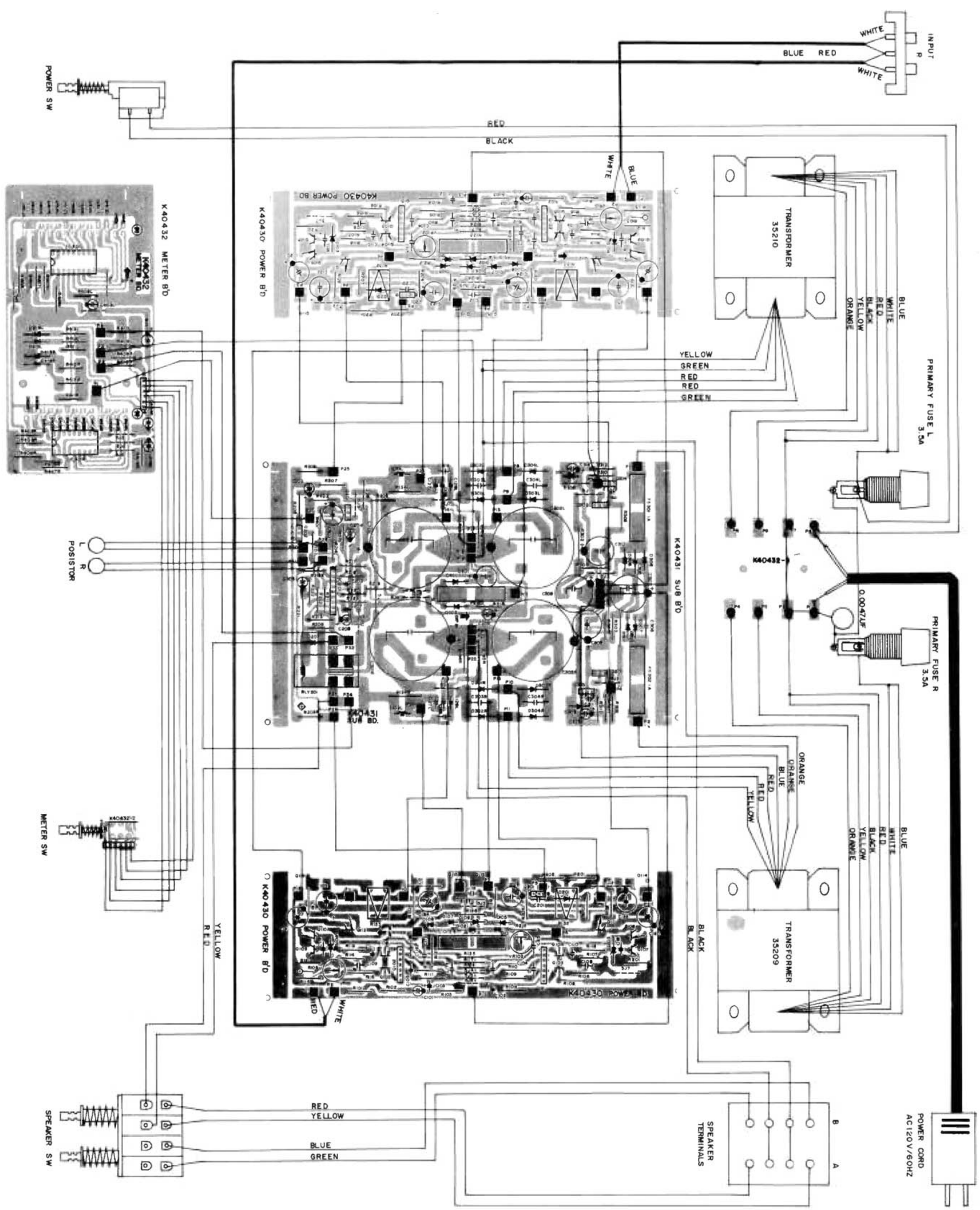

NOTE:

This wiring diagram is drawn for AC 120V/60Hz model only. All the inside connections are the same as this diagram, except for the connections of AC power supply section.
Please refer to the "AC Power Supply Connections around Transformer according to Safety Regulation" for the others.

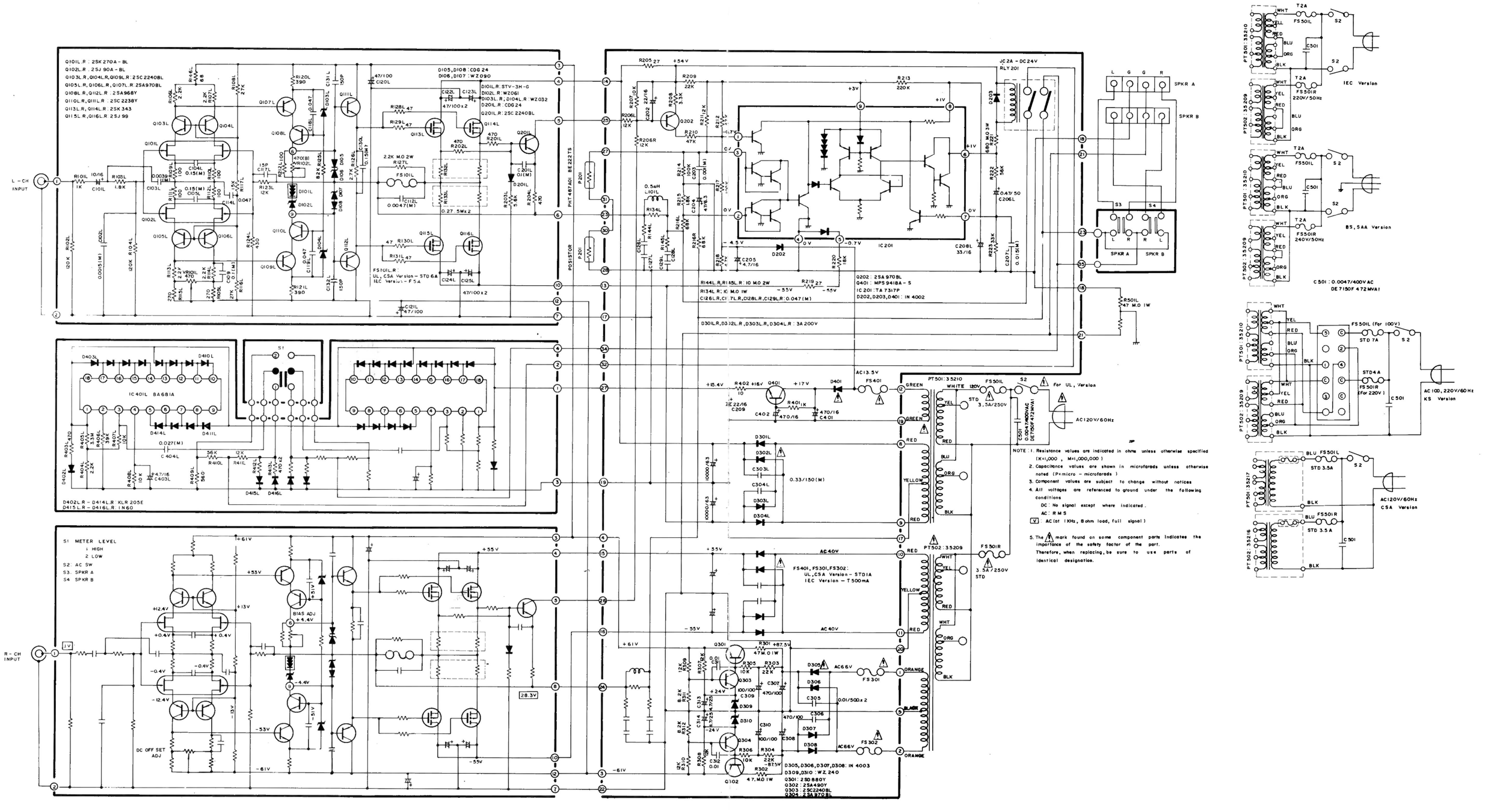
Q101L,R : 2SK 270A - BL
Q102L,R : 2SJ 90A - BL
Q103L,R,Q104L,R,Q109L,R : 2SC 2240BL
Q105L,R,Q106L,R,Q107L,R : 2SA970BL
Q108L,R,Q112L,R : 2SA968Y
Q110L,R,Q111L,R : 2SC 2238Y
Q113L,R,Q114L,R : 2SK 343
Q115L,R,Q116L,R : 2SJ 99
D105,D108 : CDG 24
D106,D107 : WZ090
D101L,R : STV-3H-G
D102L,R : WZ061
D103L,R,D104L,R : WZ032
D201L,R : CDG 24
Q201L,R : 2SC 2240BL
FS101L,R :
UL, CSA Version - STD 6A
IEC Version - F5A
L - CH INPUT
R - CH INPUT
PHT 497A01 BE222TS
POSISTOR
P201
IC401L BA6181A
S1 METER LEVEL
1 HIGH
2 LOW
S2 AC SW
S3 SPKR A
S4 SPKR B
BIAS ADJ
DC OFF SET ADJ
D402L,R - D414L,R : KLR 205E
D415L,R - D416L,R : IN60
JC2A - DC24V
RLY201
SPKR A
SPKR B
IC201 : TA7317P
Q202 : 2SA970BL
Q401 : MPS9418A - S
D202,D203,D401 : IN 4002
R144L,R,R145L,R : 10 M0.2W
R134L,R : K M0.1W
C126L,R,C127L,R,C128L,R,C129L,R : 0.047(M)
D301L,R,D312L,R,D303L,R,D304L,R : 3A200V
FS401,FS301,FS302 :
UL,CSA Version - STD1A
IEC Version - T500mA
D305,D306,D307,D308 : IN 4003
D309,D310 : WZ 240
Q301 : 2SD880Y
Q302 : 2SA490Y
Q303 : 2SC2240BL
Q304 : 2SA970BL
Q102
PT501 : 35210
PT502 : 35209
PT502 : 35217
PT502 : 35216
IEC Version
BS, SAA Version
C501 : 0.0047/400V AC
DE7150F 472MVA1
AC100, 220V/60Hz
KS Version
AC120V/60Hz
CSA Version
For UL, Version
AC120V/60Hz
NOTE : 1. Resistance values are indicated in ohms unless otherwise specified (K=1,000 , M=1,000,000)
2. Capacitance values are shown in microfarads unless otherwise noted (P=micro - microfarads)
3. Component values are subject to change without notices
4. All voltages are referenced to ground under the following conditions
DC : No signal except where indicated.
AC : R M S
V : AC(at 1KHz, 8ohm load, full signal)
5. The ⚠ mark found on some component parts indicates the importance of the safety factor of the part. Therefore, when replacing, be sure to use parts of identical designation.