SHERWOOD

S-702CP

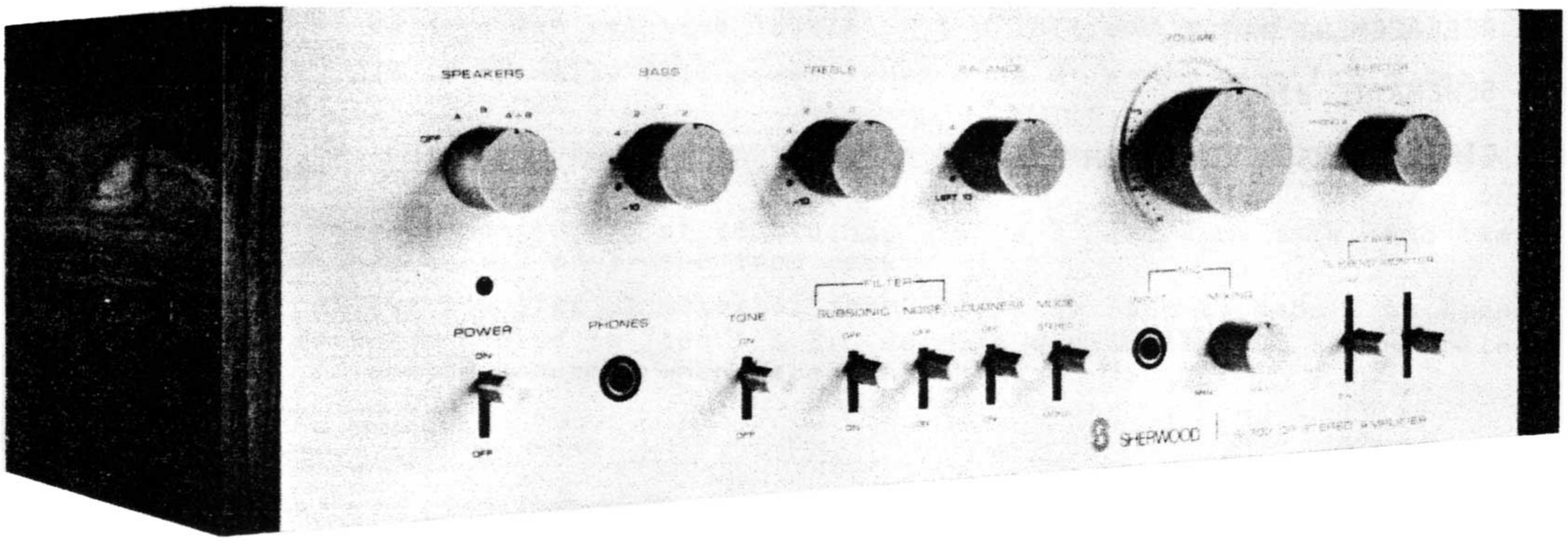

SERVICE MANUAL

www.hifiengine.com

Contents

FRONT PANEL FEATURES 1

BLOCK DIAGRAM 2

SERVICE AND ADJUSTMENT PROCEDURE

- AMPLIFIER SERVICE AND ADJUSTMENT 3
- USE OF A VARIAC 3
- LINE FUSE AND INITIAL CIRCUIT CHECKS 3
- AMPLIFIER FAULT ANALYSIS 3
- DISTORTION IN THE AMPLIFIER OUTPUT 3
- OUTPUT TRANSISTOR BIAS ADJUSTMENT 3
- BIAS ADJUSTMENT USING AN INTERMODULATION DISTORTION ANALYZER 4
- BIAS ADJUSTMENT USING A HARMONIC DISTORTION ANALYZER 5
- BIAS ADJUSTMENT USING A MILLIVOLTMETER OR MILLIAMMETER 5
- BIAS ADJUSTMENT USING A LINE WATTMETER 6
- POWER SUPPLY SERVICING AND FAULT ANALYSIS 6
- LOUDSPEAKER DC VOLTAGE PROTECTION CIRCUIT 6
- POWER TURN ON DELAY AND INSTANT OFF CIRCUIT 6
- AMPLIFIER ELECTRONIC PROTECTION 6

SPECIFICATIONS 7

REPLACEMENT PARTS 8

SCHEMATIC DIAGRAM (See Inserts)

CIRCUIT BOARD COMPONENT LAYOUT (See Inserts)

www.hifiengine.com

Front Panel Features

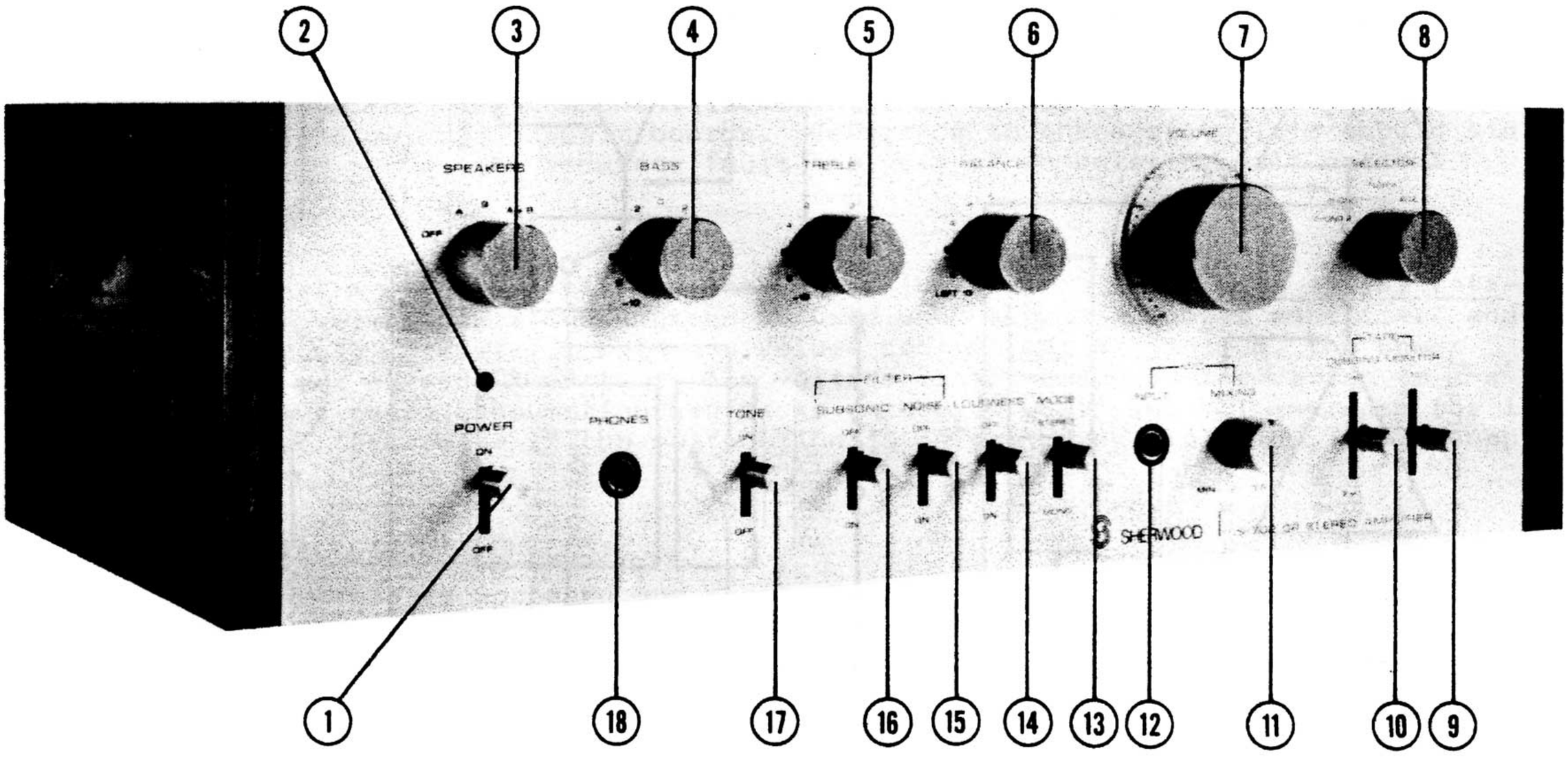

1. POWER ON-OFF SWITCH
2. LED PILOT LAMP
3. SPEAKER SELECTOR SWITCH: Connects speaker "A", "B", "A & B" to the amplifier or shuts all speakers off in the "OFF" position.
4. BASS CONTROL: Varies low frequencies by as much as ±14dB.
5. TREBLE CONTROL: Varies high frequencies by as much as ±12dB.
6. BALANCE CONTROL: Adjusts the relative levels of the left and right speakers.
7. VOLUME CONTROL: 0dB is normally full power. Has 10dB of extra gain for quiet recordings.
8. INPUT SELECTOR SWITCH: Selects the input source to be amplified; PHONO 1 or 2, TUNER, AUX 1 or 2.
9. TAPE MONITOR: Permits monitoring of recordings with a 3 head tape deck, and tape playback with either 2 or 3 head tape deck.
10. TAPE DUBBING: Allows transfer of material from Tape 1 to Tape 2, Tape 2 to Tape 1, or Input Selector Source to Tape 1 & 2. Permits duplication of tapes while listening to another source, when Tape Monitor is on "SOURCE".
11. MICROPHONE LEVEL CONTROL
12. MICROPHONE INPUT JACK
13. MODE: Combines left and right channels for MONO operation.
14. LOUDNESS: Adds frequency compensation for listening below 0dB on the Volume control.
15. NOISE FILTER: Removes "scratch" from records or background "hiss" from noisy FM or tapes.
16. SUBSONIC FILTER: Removes unwanted "sub-bass" such as record warps and microphone howls. Allows all of the amplifier's power to be used on musical material instead of being used on moving speaker cones at inaudible frequencies.
17. TONE: Disables tone controls and establishes a flat frequency response reference.
18. STEREO HEADPHONE JACK: Connected regardless of speaker selection.

www.hifiengine.com

Block Diagram

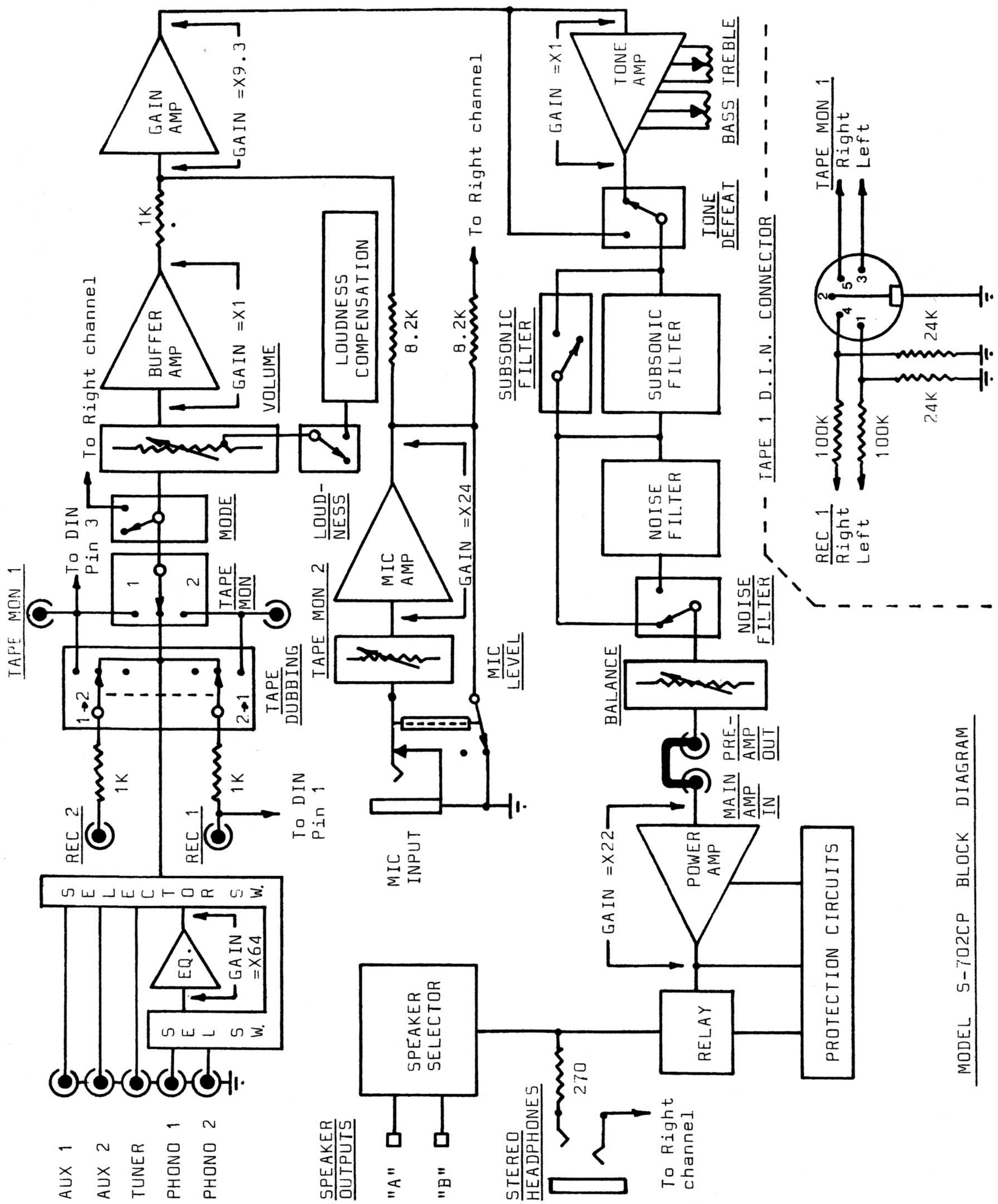

www.hifiengine.com

Service and Adjustment Procedure

AMPLIFIER SERVICE AND ADJUSTMENT:

NOTES:

1. For simplicity only the left channel and its related circuitry are described. The right channel is identical except for schematic reference symbol numbers.
2. As a convenience for fast component location, this manual contains detailed pictorials of all the printed circuit boards. Reference to these pictorials should aid considerably in the quick, accurate fault analysis of an existing malfunction.

USE OF A VARIAC:

It is imperative that a variable voltage line source (Variac) equipped with a line wattmeter to identify abnormal power consumption be used when servicing power amplifiers and associated power supply circuitry. With the Volume control set at minimum, the power consumption should not exceed 25 watts as the voltage is increased by the Variac to the rated 120VAC. If the power consumption begins to exceed 25 watts, do NOT increase the line voltage any further. Determine if the malfunction is in the power amplifier, power supply, or preamplifier.

LINE FUSE AND INITIAL CIRCUIT CHECKS:

Verify that the line fuse is unopened and check quiescent power consumption. The main cause for abnormal power consumption, in order of decreasing occurance, are:

1. Open or shorted amplifier output, driver or pre-driver transistors.
2. Open or shorted power supply diodes.
3. Shorted power transformer.

AMPLIFIER FAULT ANALYSIS:

If an amplifier channel is in question, check related circuit boards for burned parts and replace. Check all the transistors with an ohmmeter* for opens or shorts and replace if defective. [* WARNING: Some ohmmeters may damage sensitive solid-state devices. Whenever possible, use a high resistance range of at least Rx10.]

IMPORTANT: For the following tests, an 8 ohm load resistor must be connected to each of the two power amplifier [speaker] output terminals.

Use the centerpoint voltage (measured from the plus [+] speaker terminal to ground) as a guide. The centerpoint voltage should always be Zero ±30mV. Any larger deviation suggests shorted or open devices.

If channel operation is still faulty, verify that there are no shorted capacitors, open resistors, etc., on the board.

Inspect the underside of the board for shorted pads, broken connections, etc.

When the board is restored, readjust the Output Bias (see the next page).

DISTORTION IN THE AMPLIFIER OUTPUT:

Distortion which exceeds the amplifier ratings (see Specification section) may be due to the following:

1. Incorrect adjustment of output transistor bias.
2. Parasitic high frequency oscillation (1MHz) due to transistor aging, indicated by IMD.
3. Mismatched or defective output transistors.
4. Defective (low-beta) driver or predriver transistors.

OUTPUT TRANSISTOR BIAS ADJUSTMENT:

Proper output transistor operation and output bias adjustment are most important to assure cool, low-distortion operation of the amplifier. Bias adjustment is necessary if the output transistors are replaced* or if any of the transistors in the driver circuitry of the amplifier exhibits one or more of the following symptoms:

www.hifiengine.com

1. Overheating of the output transistors under normal operating conditions. [Normal output transistor case temperatures are 25-35°C (77-95°F), quiescent operation, at 25°C (77°F) ambient.]
2. Excessive low level Intermodulation Distortion (IMD) or Total Harmonic Distortion (THD) - more than 0.08% at 7.0 volts across 8 ohms.

   * It is extremely important that the insulated washers used to separate the output transistors from their heat sink be unbroken and installed with silicon grease liberally applied to all surfaces in contact with each other. Make certain that the emitter and base pins of the output transistors do not touch any part of the heat sink assembly.

NOTE: For the following tests, an 8 ohm load resistor must be connected to each of the two power amplifier (speaker) output terminals.

SUGGESTED AMPLIFIER TEST BENCH SET-UP

Input and output grounds must be separate for accurate readings.

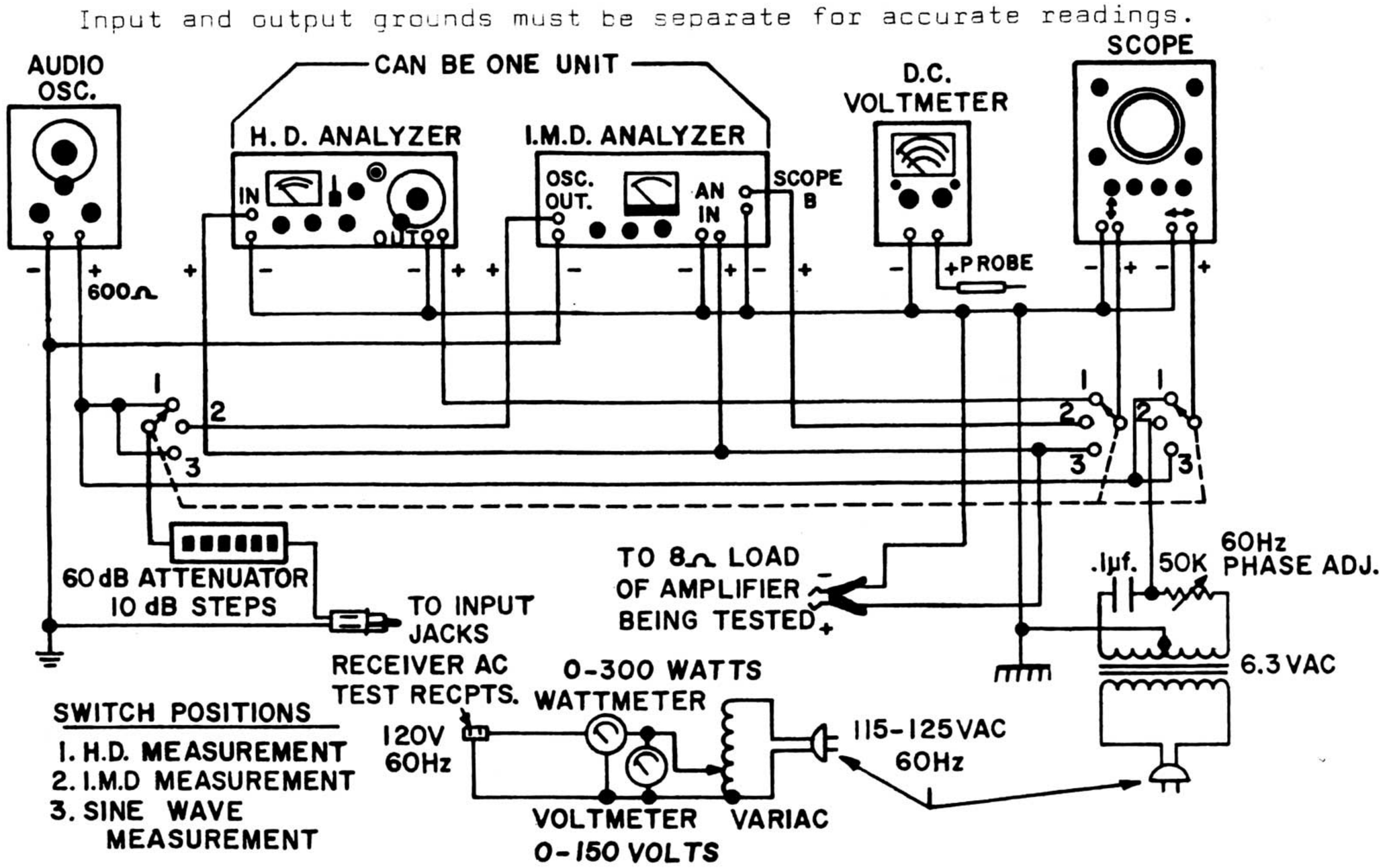

BIAS ADJUSTMENT USING AN INTERMODULATION DISTORTION (IMD) ANALYZER: [Prefered method]

1. Connect the power amplifier for testing. The input and output ground must not be connected outside of the amplifier, as this would cause a ground loop and inaccurate readings.
2. Connect an Intermodulation Distortion Analyzer with 60Hz and 7000Hz mixed 4:1, to the amplifier AUX 1 input and set the SELECTOR switch to AUX 1.
3. Set the VOLUME control to maximum and adjust the generator level for an amplifier output of 7.0 volts across the 8 ohm load of the amplifier.

4a. While observing the resultant distortion waveform, adjust the left channel bias pot VR402a so that the crossover distortion is at the point of being eliminated (Class "AB"). NOTE: Class "A" operation (Continued rotation) causes the output transistors to draw excessive current and consequently overheat. Refer to Figure 1 on the next page. The line wattmeter reading should not increase by more than one watt during bias adjustment.

4b. Use of the 60Hz Phase Adjustment can improve the visibility of proper bias adjustment. Refer to Figure 1 on the next page.

www.hifiengine.com

5. Repeat Step 4a for the right channel, and adjust VR402b.

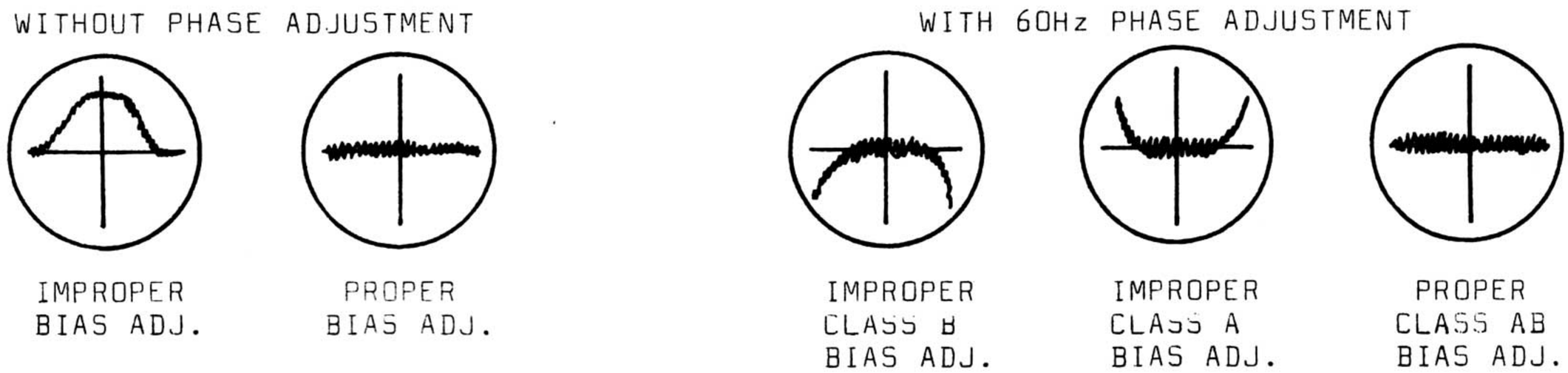

Figure 1

The following performance indicates a properly operating amplifier with both channels driven into 8 ohm loads:

1. Less than 0.03% Intermodulation Distortion (IMD) at 7.0 V (typically 0.01%).
2. 60 watts of power per channel at no greater than 0.2% IMD.

BIAS ADJUSTMENT USING A HARMONIC DISTORTION ANALYZER:

1. Connect the amplifier for testing.
2. Connect an oscillator with less than 0.01% distortion at 1KHz to the amplifier Left AUX 1 input and set the SELECTOR switch to AUX 1.
3. Set the VOLUME control to maximum and adjust the oscillator for an amplifier output of 3.0 volts across the 8 ohm load of the amplifier channel under test.
4. Using the Harmonic Distortion Analyzer, looking at the distortion of the amplifier properly nulled, make the adjustment as follows: Adjust bias for class "AB" operation by turning the bias potentiometer VR402a so that the crossover is at the point of being eliminated. NOTE: Class "A" operation (continued rotation) causes the output transistors to draw excessive current and overheat. Refer to Figure 2 below.
5. Repeat Steps 3 and 4 for the Right channel.

Improper Bias Adjustment

Proper Bias Adjustment

Figure 2

The following performance indicates a properly operating amplifier with both channels driven into 8 ohm loads:

1. Less than 0.08% THD at 3.0 volts (typically 0.02%).
2. 65 watts per channel at no more than 0.2% THD (1KHz).
3. 60 watts per channel at no greater than 0.2% THD (20-20,000Hz).

BIAS ADJUSTMENT USING A MILLIVOLTMETER OR MILLIAMMETER:

If an accurate digital or analog multimeter is available, the bias pots VR402a Left and VR402b Right channel, can be adjusted to indicate 11mA through an output transistor's emitter resistor.

To adjust the bias using a milliammeter, proceed as follows:

1. Remove all amplifier input signals.
2. Rotate the VOLUME control to minimum (-60dB).
3. Connect the ammeter in series with R416a or R417a (emitter resistors of the left channel power output transistors TR408a and TR409a).

www.hifiengine.com

4. Adjust bias potentiometer VR402a, located on the driver board for 11mA DC.
5. Repeat Steps 3 and 4 for the Right channel.

To adjust using a millivoltmeter, proceed as follows:

1. Remove all amplifier input signals.
2. Rotate the VOLUME control to minimum (-60dB).
3. Connect the voltmeter across R416a or R417a.
4. If R416 is 0.47 ohms, then adjust bias potentiometer VR402a for 5.2mV DC.
   If R416 is 0.27 ohms, then adjust bias potentiometer VR402a for 3.0mV DC.
5. Repeat Steps 3 and 4 for the Right channel.

BIAS ADJUSTMENT USING A LINE WATTMETER:

When test equipment required for previous bias adjustment procedures is not readily available and adjustment is absolutely necessary, the following procedure may be used which requires only an accurate line wattmeter:

1. Turn the VOLUME control to minimum (-60dB).
2. Adjust the bias potentiometers VR402a and VR402b one at a time to the point at which the amplifier begins to cause a very slight increase in line wattage consumption. Typical proper operation would develop a line wattage consumption of 15 watts.

POWER SUPPLY SERVICING AND FAULT ANALYSIS:

Power supply malfunctions are usually due to shorted or open power diodes, shorted or open zener diodes or transistors located on the Power Supply PC borad, or a defective power transformer.

These devices may be easily checked using an ohmmeter. The transformer's operation may be checked by measuring secondary voltages with the associated circuit legs disconnected. This is easily accomplished by removing secondary fuses F601, F602 and F603 and then disconnecting the two red leads from the board. Shorted windings can cause abnormal power consumption in a unit that otherwise functions well.

LOUDSPEAKER DC VOLTAGE PROTECTION CIRCUIT (Positive and Negative):

The loudspeakers are relay protected from DC at the amplifier output terminals. The output from the Left and Right channels is combined by R601 and R602 and presented to TR602 on the Relay PC board; while DC is blocked by C601 and C602, the AC signal is also presented to TR601. TR601 and TR602 form a differential amplifier which ignores the AC signal, and amplifies any DC at the speaker outputs to turn on TR603 (through D602 on the positive DC, and through D603 on the negative DC). This forward biases TR604 which then turns off TR605, de-energizing the speaker relay.

POWER TURN ON DELAY AND INSTANT OFF CIRCUIT:

The S702CP includes a circuit which eliminates speaker pops and noise when POWER is switched ON or OFF. As POWER is applied C604 must be charged up through R616 before TR605 can be forward biased and energize the speaker output relay. When the amplifier is turned OFF, C603 quickly discharges from its normal operating negative potential. This allows a voltage divider, consisting of R614 and R615, to activate TR604 which immediately turns off TR605 and de-energizes the speaker relay.

AMPLIFIER ELECTRONIC PROTECTION:

The complementary output transistors are load line limited, with the maximum current limited to 6.2 Amp peak (equivalent to 75 watts @ 4 ohms). Signal voltages developed across the output transistor's emitter resistor R416a and R417a are voltage divided by R424/426 and R425/427 to forward-bias transistors TR411a and TR412a. When more than 0.45V is put on the limiting transistor's base, the output transistor's drive current is shunted through the limiting transistor. This is a continually sampling circuit which limits output current only when necessary, after which the circuit resumes normal operation.

www.hifiengine.com

Specifications

Preamplifier

OUTPUT LEVEL (to drive power amp.): 1.0V

OUTPUT CAPABILITY FROM 20-20,000Hz WITH LESS THAN 0.08% THD: 2.0V

OUTPUT CAPABILITY WITH LESS THAN 0.08% IM DISTORTION: 2.0V
(STMPE Intermodulation, 60/7000Hz, 4:1 out.)

INPUT SENSITIVITY (and Impedance) FOR RATED OUTPUT @ 1000Hz:
Phono 1 & 2: 2.5mV (47K Ohm/220pF)
Aux 1 & 2: 160mV (50K Ohm)
Tape Monitor 1 & 2: 160mV (50K Ohm)
Mic: 6.0mV (50K Ohm)

PHONO INPUT CAPABILITY° FOR 0.2% THD @ 12.75V

RECORD OUTPUT:	(1000Hz)	(10,000Hz)
Phono 1 & 2:	200mV	975mV

INPUT CAPABILITY FOR 0.08% THD, 1000Hz:
Aux 1 & 2: Greater than 10V
Tape Monitor 1 & 2: Greater than 10V
Mic: Greater than 5V

SIGNAL TO NOISE: (IHF "A" Wtg.) (Unweighted)
Reference to 10mV at Phono Input:

Phono 1 & 2:	92dB	78dB

Reference to Input Sensitivity:

Phono 1 & 2:	80dB	66dB
Aux 1 & 2:	95dB	85dB
Mic:	80dB	75dB
Volume Minimum:	100dB	90dB

PHONO GAIN: 36dB

MIC GAIN: 44.4dB

AUX GAIN: 15.9dB

RECORD OUTPUT IMPEDANCE: 1K Ohm

DIN RECORD OUTPUT IMPEDANCE: 18K

FREQUENCY RESPONSE:
Phono 1 & 2: ±0.5dB RIAA Standard;
Subsonic Response: -3dB @ 10Hz, -10dB @ 4Hz
Aux 1 & 2 & Tape Monitor 1 & 2: 20-20,000Hz ±0.5dB [Tone flat or defeated].
Bass Control: ±14dB @ 50Hz (Detented)
Treble Control: ±12dB @ 15KHz (Detented)
Subsonic Filter°°: -3dB @ 20Hz, -36dB @ 4Hz, 18dB/Octave
Noise Filter: -3dB @ 7000Hz, -20dB @ 20KHz, 12dB/Octave
Loudness Compensation @ -30dB setting: +8dB @ 100Hz, +2dB @ 10,000Hz

SEPARATION: Better than 40dB from 20Hz-20KHz

Power Amplifier

POWER OUTPUT: 60 watts per channel (17.78dBW) minimum RMS, at 8 Ohms from 20Hz-20KHz with no more than 0.2% Total Harmonic Distortion. [72 watts RMS, at 4 Ohms, at 1000Hz.]

INTERMODULATION DISTORTION: [60 & 7000Hz, 4:1] Less than 0.2% at 8 Ohm rated output.

POWER AMPLIFIER GAIN: 26.8dB

IHF CLIPPING HEADROOM: 0.8dB

IHF DYNAMIC HEADROOM: 1.5dB

INPUT SENSITIVITY (and Impedance) FOR RATED OUTPUT, at 1000Hz: 1.0V (50K Ohm)

SIGNAL TO NOISE: Unweighted: 95dB
IHF "A" Weighted: 105dB

FREQUENCY RESPONSE: 5-110,000Hz ±1dB

SEPARATION: Better than 50dB from 20Hz-20KHz

DAMPING FACTOR: 30:1 @ 8 Ohm

HEADPHONE OUTPUT: 4 Ohms or greater

General

POWER REQUIREMENTS:
Domestic Units: 115-125VAC, 50/60Hz
Export Units: 230-240VAC, 50/60Hz

RATED POWER CONSUMPTION: 15-250 watts

FUSES: Power Line: Domestic: 5.0 Amp 3AG
Export: 2.5 Amp 3AG
B+/B- Supply: 1.0 Amp 3AG

AC OUTLETS: 1 Switched 100 watts Max.
1 Unswitched 150 watts Max.

SEMICONDUCTORS: 51 transistors, 9 power diodes, 2 zener diodes, 15 signal diodes, 1 LED.

All specifications with 120VAC; specifications and design subject to possible modification without notice.

°Since the RIAA Standard has a boost of 4.87 at 10,000Hz, there is as much freedom from overload at 10,000 as at 1000Hz.

°°The response of the subsonic filter adapts the audible phono response to follow the IEC specification.

www.hifiengine.com

Replacement Parts

TRANSISTORS	REFERENCE NUMBERS	PART NO.	LIST PRICE
2SA561	TR603(P)		$1.81
2SA815 [PNP Driver]	TR407a,b		1.76
2SA841	TR101a,b; 102a,b; 303a,b; 305a,b; 401a,b; 402a,b		1.24
2SB557 [PNP Output]	TR409a,b		8.01
2SC734	TR601(P), 602, 602(P), 604		.87
2SC1000BL	TR103a,b		1.28
2SC1166	TR605(P)		1.11
2SC1625 [NPN Driver]	TR406a,b		1.70
2SC1681	TR410a,b		1.18
2SC234	TR601		1.72
2SD427 [NPN Output]	TR408a,b		6.48
CS9012	TR412a,b		.87
CS9013	TR405a,b		.87
MPS-A55	TR104a,b		1.18
MPS-L01	TR403a,b; 404a,b		1.18
MPS-9630	TR411a,b		.86
MPS-9633	TR201, 202, 301a,b; 302a,b; 304a,b		1.03

DIODES, SIGNAL, POWER, ZENER AND LED			
1N970B/WZ240 24V Zener 400mW	D101(Pre-Amp)		.71
1N4002 1 Amp, 100PIV	D601		.61
1N4003 1 Amp, 200PIV	D605, 606, 607, 608		.68
1N5402/P300 3 Amp, 200PIV	D601, 602, 603, 604		1.32
MA150/CDG24 (Si Signal)	D101a,b; 102a,b; 103a,b; 104a,b; 105a,b; 601(P), 601(P), 602(P), 603(P), 604(P), 605(P)		.59
MZ314/WZ140 14V Zener, 500mW	D609		1.24
FLV-117 LED	D501		1.03

ELECTROLYTIC CAPACITORS (Capacitance in microfarads. PC mounting unless otherwise specified)			
0.22/16WV (Solid Alum.)	C411a,b		.59
0.47/16WV (Solid Alum.)	C201, 303a,b		.59
1.0/16WV (Solid Alum.)	C206, 306a,b; 314a,b; 319a,b; 320a,b; 401a,b		.59
470/10WV	C601(P), 602(P), 614		1.30
2.2/16WV	C321a,b		.60
10/16WV	C101a,b; 307		.63
22/16WV	C105a,b		.72
47/16WV	C113, 406a,b; 412		.81
100/16WV	C205		.86
2.2/25WV	C603(P)		.60
4.7/25WV	C110a,b; 310a,b; 316a,b		.63
100/25WV	C207		1.11
220/25WV	C111		1.13
1000/25WV	C112		1.61
47/35WV	C304, 317, 318		1.00
1/50WV	C416a,b; 417a,b		.60
100/50WV	C405a,b. 613		1.08
220/50WV	C608, 609, 610		1.38
1000/50WV	C606, 607		1.76
10,000/50WV [Cans]	C506, 507		15.33

ELECTRICAL COMPONENTS			
COIL, 2.7uH	L401a,b	30045	.84
COIL, 39mH	L301a,b	30126	1.24
FUSE, 0.5 AMP, 3AG	FS603 [Lights]	312.500	.30
FUSE, 1.0 Amp, 3AG	FS601, 602 [+ & - Supply]	312001	.30
FUSE, 5.0 Amp, 3AG	FS501 [AC Line]	312005	.30

www.hifiengine.com

ELECTRICAL COMP. (Cont.)	REFERENCE NUMBERS	PART NO.	LIST PRICE
LAMP, 8V, 60mA	Volume Level Illumination	64027A-06	$1.18
POTENTIOMETER, 50K	VR201 [Mic Level]	15060	1.58
POTENTIOMETER, DUAL 100K	VR301a,b [Volume]	15048-02	5.80
POTENTIOMETER, DUAL 100K	VR302a,b; 303a,b [Tone]	15053	4.50
POTENTIOMETER, 100K	VR304 [Balance]	15058-03	1.47
RELAY, DPST, 24VDC	RY601	37001	14.98
SWITCH, ROTARY, 5 POS.	S1 [Selector]	90073	6.26
SWITCH, ROTARY, 4 POS.	S10 [Speaker Selector]	90112-02	8.72
SWITCH, LEVER	S9 [AC Power]	90114-01	7.52
SWITCH, LEVER, DPTT	S3 [Monitor]	90130A	3.16
SWITCH, LEVER, 4PTT	S2 [Dubbing]	90131A	3.52
SWITCH, LEVER, DPDT	S4, 5, 6, 8 [Mode, Loudness, Tone and Noise Filter]	90132A	2.00
SWITCH, LEVER, 4PDT	S7 [Subsonic Filter]	90140	3.16
TRANSFORMER, POWER	T1 120VAC, 50/60Hz	35067	60.23
TRIMMER RESISTOR, 4.7K	VR401a,b	16000	.84
TRIMMER RESISTOR, 2.2K	VR402a,b	16004	.84

MECHANICAL COMPONENTS		
DIN CONNECTOR, 5 PIN	90066	1.32
ESCUTCHEON ASSEMBLY	61053-04	22.17
FUSE HOLDER [Rear Panel Mounting]	69020-03	1.74
JACK, W/DPDT SW., INSULATED [Mic]	95024	1.64
JACK, STEREO HEADPHONE, OPEN CKT., INSULATED	95035	1.44
KNOB, CONTROL	72135	1.87
KNOB, LEVER SWITCH	72087-02	1.36
KNOB, MIC LEVEL	72148-02	2.06
KNOB, VOLUME [w/Acrylic background]	72144&72095	11.16
PHONO JACK CONNECTING LINK	95017A	.63
RECEPTACLE BOARD, 8 PHONO JACKS	95023	1.93
RECEPTACLE BOARD, 14 PHONO JACKS	95041	2.63
TERMINAL, SPEAKER, 4 SPRING POSTS	76003	1.93
WOOD SIDE PANEL, LEFT SIDE	74165	5.82
WOOD SIDE PANEL, RIGHT SIDE	74166	5.82
CABINET TOP COVER	74164A	8.31

Note: Due to duplication of part numbers on several boards (P) following a reference number indicates part is on the Protection Board and (Pre-Amp) indicates a diode on the Pre-Amplifier section of Pre-Amplifier/Power Supply Board.

---------- ALL PRICES ARE SUBJECT TO CHANGE WITHOUT NOTICE ----------

ORDERING REPLACEMENT PARTS

When ordering replacement parts, always include part number, description and model no.

When defective parts are returned for replacement under warranty (Authorized Service Stations only) include a list by part number and description, of the returned parts. Request either credit or replacement parts.

The return of entire circuit boards for replacement is not covered by the warranty except where component failure has resulted in physical damage to the board itself.

If a set or board cannot be repaired, return the complete amplifier to the Sherwood Factory Service Laboratory, 4300 N. California Ave., Chicago, IL 60618 (312)478-7300. Include a complete description of the malfunction.

SHERWOOD ELECTRONIC LABORATORIES, INC., 4300 N. CALIFORNIA AVE., CHICAGO, IL 60618 USA

Litho in USA 5/79

www.hifiengine.com

SCHEMATIC DIAGRAM

SHERWOOD
MODEL S-702CP
STEREO AMPLIFIE

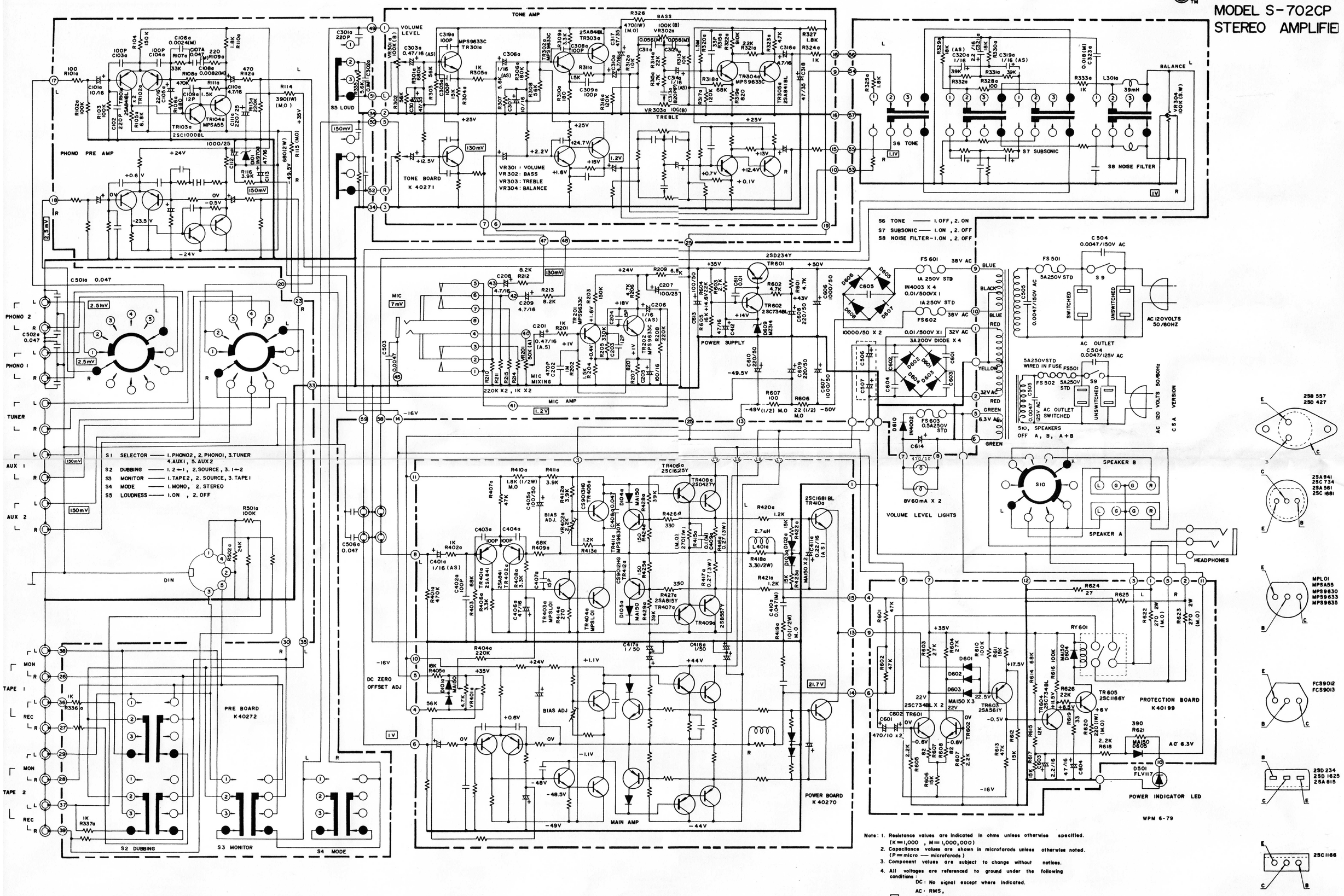

Note: 1. Resistance values are indicated in ohms unless otherwise specified. (K = 1,000, M = 1,000,000)
2. Capacitance values are shown in microfarads unless otherwise noted. (P = micro — microfarads)
3. Component values are subject to change without notices.
4. All voltages are referenced to ground under the following conditions:
DC: No signal except where indicated.
AC: RMS,
V ····· AC (at 1KHz, 8ohm load, full signal)
△ ····· Factory selected value