SCHEMATIC DIAGRAM

SHERWOOD
MODEL S-7650CP
AM/FM STEREO RECEIVER

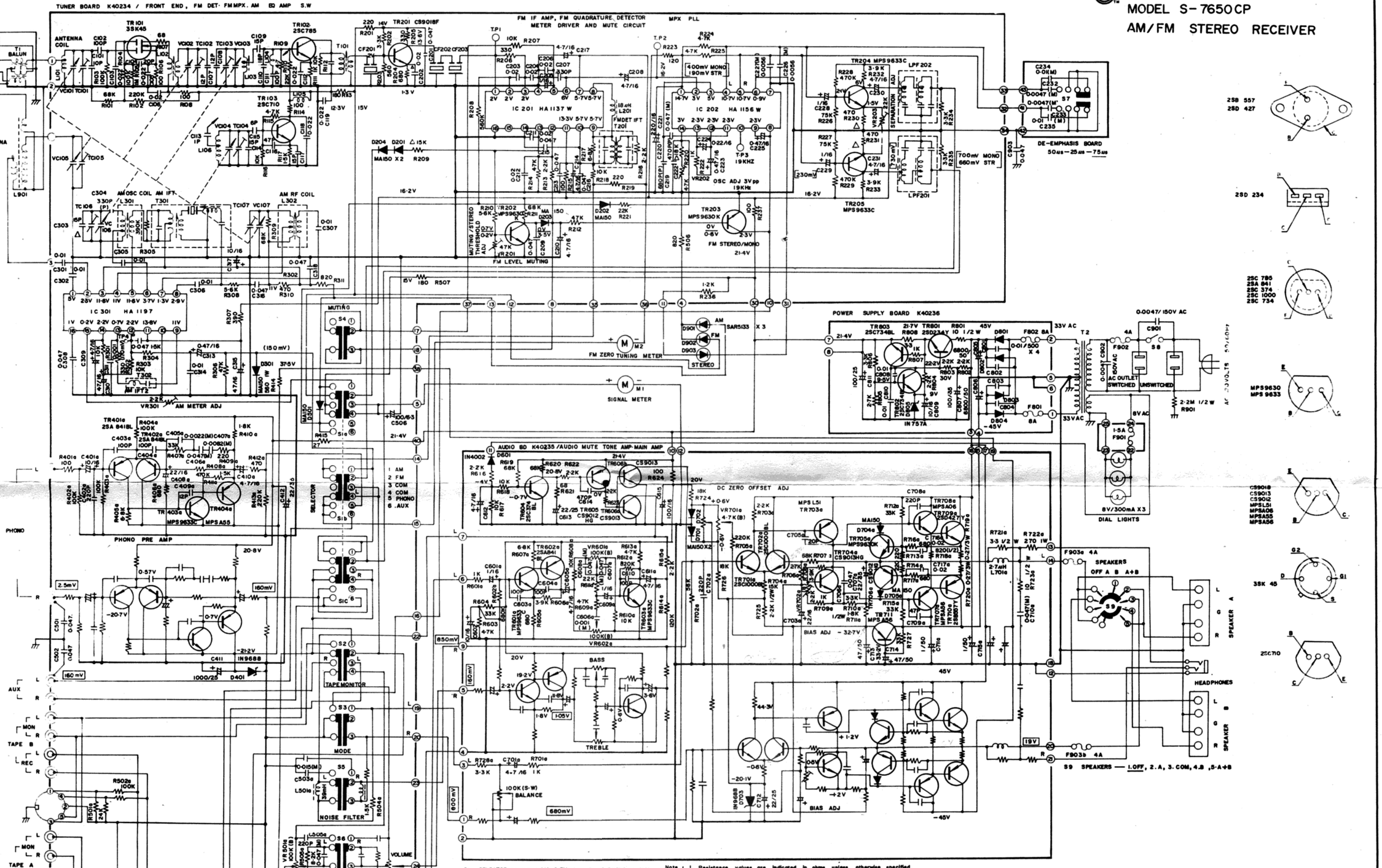

S1 SELECTOR —— 1.AM 2.FM 3.4.COM 5.PHONO 6.AUX
S2 TAPE MONI —— 1.B 2.SOURCE 3.A 4.COM
S3 MODE —— 1.MONO 2.STEREO 3.COM
S4 MUTING —— 1.OFF 2.ON 3.COM
S5 NOISE FILTER — 1.ON 2.OFF 3.COM
S6 LOUDNESS —— 1.ON 2.OFF 3.COM

Note : 1. Resistance values are indicated in ohms unless otherwise specified. (K = 1,000, M = 1,000,000)
2. Capacitance values are shown in microfarads unless otherwise noted. (P = micro —— microfarads)
3 Component values are subject to change without notice.
4. All voltages are referenced to ground under the following conditions :
DC : No signal except where indicated.
AC : RMS,
[V] .... AC (at 1KHz, 8 ohm load, full signal).
[ ] .... 100uV FM signal input, STEREO or MONO except where indicated.
MONO —— L = R 100% modulation at 400Hz
STEREO —— Pilot 10%, L or R 90% modulation at 400Hz.
( ).... 5000 uV AM signal input, 30% modulation at 400Hz.
△ .... Factory selected value.