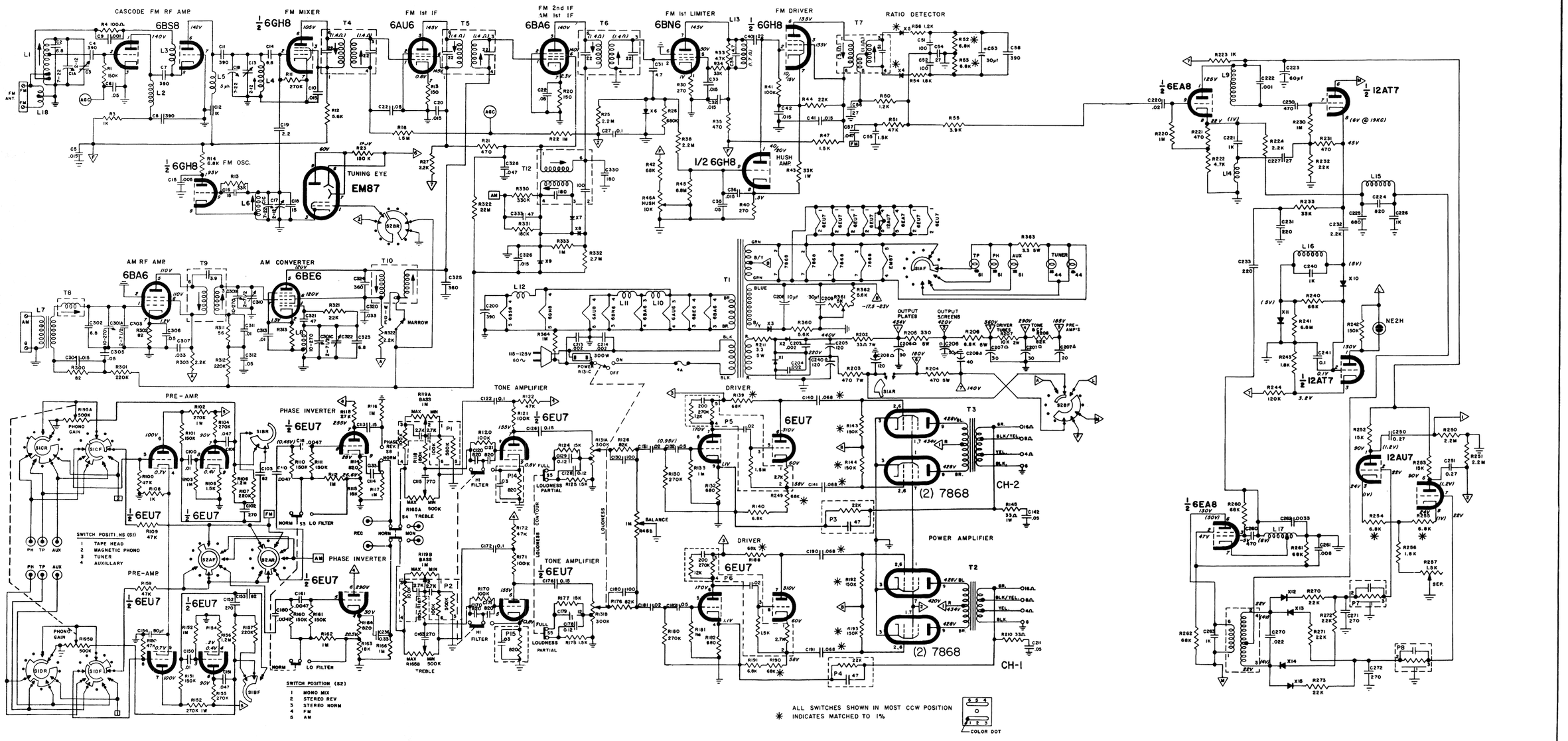

COURTESY OF SHERWOOD ELECTRONIC LABORATORIES, INC.

SHERWOOD MODEL S-7700 (SERIAL #73300 & UP)

www.hifiengine.com