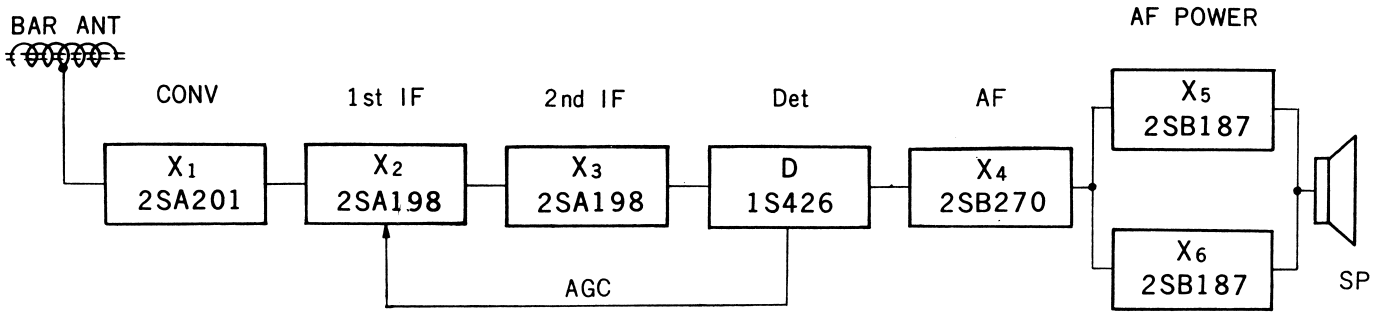

Block Diagram

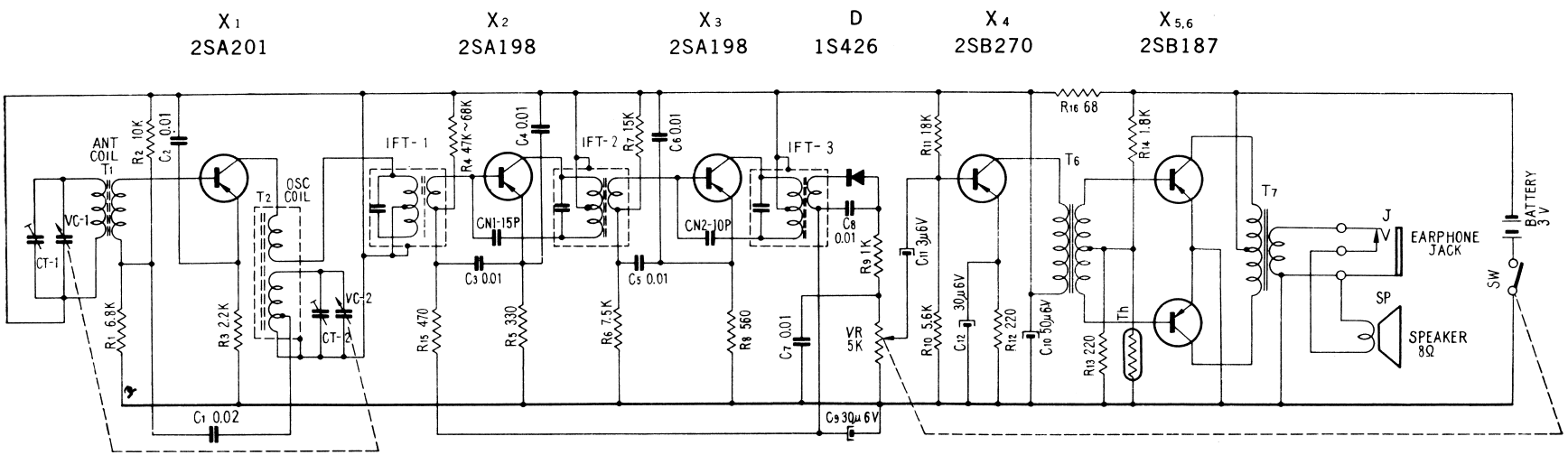

—Conductor Side—

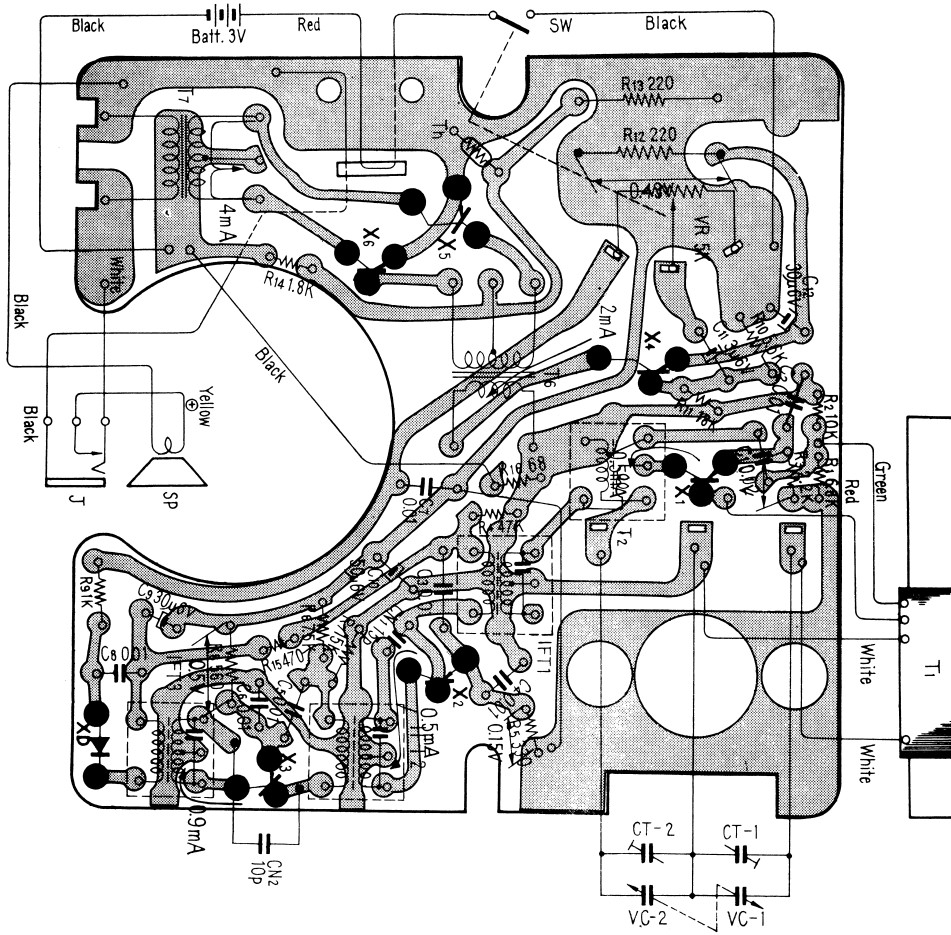

Frequency Coverage and Tracking Adjustment

Adj. Item	SSG (Standard Signal Generator) Coupling	SSG Freq.	Receiver Dial Setting	Connect VTVM	Adjust	Remarks
Frequency Coverage	Loop Antenna	520 Kc (1,000 c/s 30% AM)	Fully Counter-Clockwise	Across 8Ω Load Resistor	OSC Coil (T_2)	Adjust for maximum meter reading. Volume : max. Power Supply : DC 3V
		1,680 Kc (〃)	Fully Clockwise		OSC Trimmer (CT-2)	
Tracking	— ditto —	620 Kc (〃)	Tune to 620 Kc Signal	— ditto —	ANT Coil (T_1)	— ditto —
		1,400 Kc (〃)	Tune to 1,400 Kc Signal		ANT Trimmer (CT-1)	