PS-FL5/FL5C PS-FL5/FL5C

4-1. MOUNTING DIAGRAM

SECTION 4
DIAGRAMS

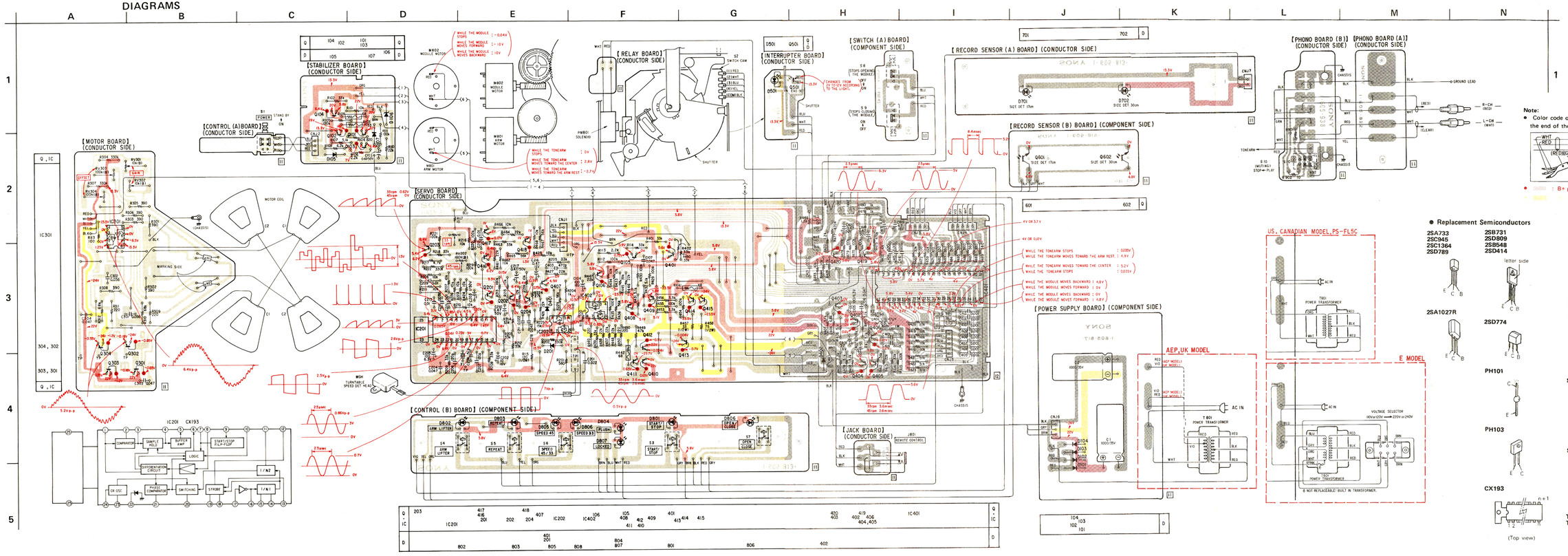

● Replacement Semiconductors

2SA733
2SC945
2SC1364
2SD789

2SB731
2SD809
2SB548
2SD414

μPC4558C
LM6402A024

2SA1027R

2SD774

PH101

PH103

CX193

1S1555
10E2
EQA01-06
EQA01-06RV

SLP131B

SR110

TLG123
TLR123

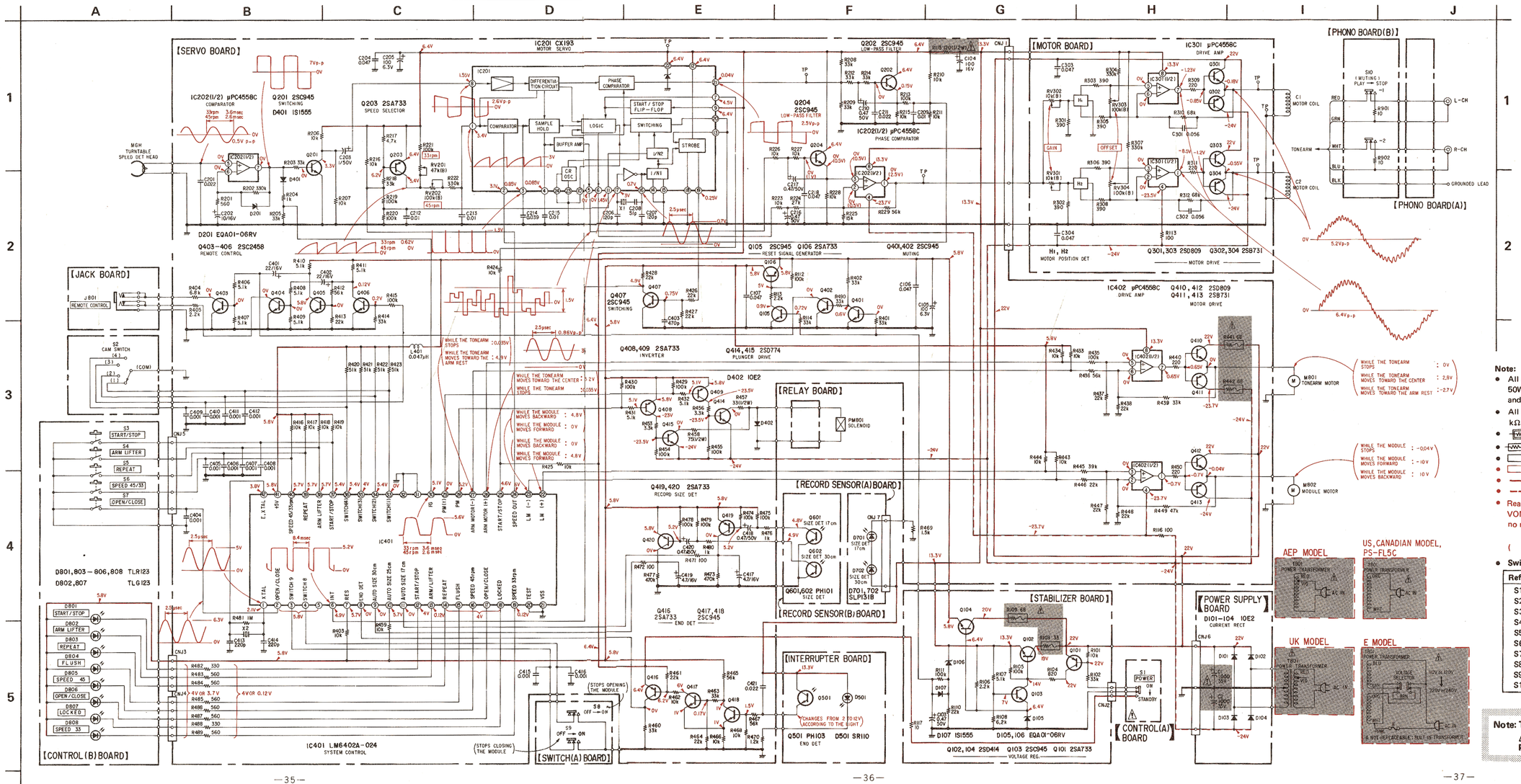

Note:

- All capacitors are in μF unless otherwise noted. pF : μμF 50WV or less are not indicated except for electrolytics and tantalums.
- All resistors are in ohms, ¼W unless otherwise noted. kΩ : 1000Ω, MΩ : 1000kΩ
- : nonflammable resistor.
- : fusible resistor.
- : panel designation.
- : adjustment for repair.
- : B+ bus.
- : B− bus.
- Readings are taken under no-signal conditions with a VOM (20 kΩ/V).
  no mark: When power switch (S1) turns on with tonearm set on arm rest.
  ( ): at 33 rpm with tonearm set on arm rest.
- **Switches**

Ref. No.	Switch	Position
S1	POWER	ON
S2	Cam-switch arm position detection	(1)
S3	START/STOP	—
S4	ARM LIFTER	—
S5	REPEAT	—
S6	SPEED 45/33	—
S7	OPEN/CLOSE	—
S8	to stop opening the module	OFF
S9	to stop closing the module	OFF
S10	MUTING	PLAY

Note: The components identified by shading and mark ⚠ are critical for safety. Replace only with part number specified.