STR-AV560/AV760

SERVICE MANUAL

US Model

STR-AV560:

STR-AV760:

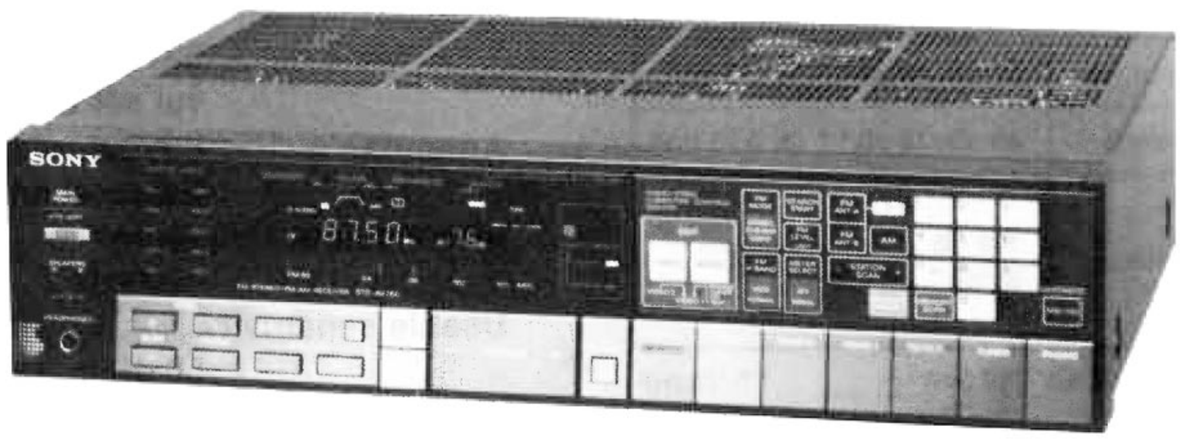

AUDIO POWER SPECIFICATIONS

POWER OUTPUT AND TOTAL HARMONIC DISTORTION:

STR-AV760
With 8-ohm load, both channels driven, from 20 - 20,000 Hz, rated 80 watts per channel minimum RMS power, with no more than 0.006% total harmonic distortion from 250 milliwatts to rated output.

STR-AV560
With 8-ohm load, both channels driven, from 20 – 20,000 Hz, rated 60 watts per channel minimum RMS power, with no more than 0.008 % total harmonic distortion from 250 milliwatts to rated output.

SAFETY-RELATED COMPONENT WARNING!!

COMPONENTS IDENTIFIED BY SHADING AND MARK ⚠ ON THE SCHEMATIC DIAGRAMS AND IN THE PARTS LIST ARE CRITICAL TO SAFE OPERATION. REPLACE THESE COMPONENTS WITH SONY PARTS WHOSE PART NUMBERS APPEAR AS SHOWN IN THIS MANUAL OR IN SUPPLEMENTS PUBLISHED BY SONY.

MICROFILM

OTHER SPECIFICATIONS

Amplifier section

Continuous RMS power output

STR-AV760 : 85 W + 85 W *1
80 W + 80 W *2
STR-AV560 : 65 W + 65 W *1
60 W + 60 W *3

*1 4 or 8 ohms, at 40 - 20,000 Hz less than 0.02 % total harmonic distortion
*2 4 ohms, at 20 - 20,000 Hz less than 0.009 % total harmonic distortion
*3 4 ohms, at 20 - 20,000 Hz less than 0.002 % total harmonic distortion

Dynamic headroom

STR-AV760 : 1.4 dB ('78 IHF)
STR-AV560 : 1.5 dB ('78 IHF)

Harmonic distortion

STR-AV760 : Less than 0.006 %
STR-AV560 : Less than 0.008%
(8 ohms, at rated output)

— Continued on page 2 —

FM STEREO/ FM-AM RECEIVER

SONY®

AUD

www.hifiengine.com

Intermodulation (IM) distortion
(60 Hz : 7 kHz = 4 : 1) STR-AV760 : Less than 0.006 %
STR-AV560 : Less than 0.008%
(8 ohms, at rated output)

Frequency response
PHONO : RIAA equalization curve ±0.5 dB
CD/AUX, VIDEO 1, 2 (audio), TAPE 1, 2 } 5 Hz – 100 kHz $^{+0}_{-1}$ dB

Residual noise Less than 70 μV (8 ohms, network A)

Damping factor STR-AV760 : 45
STR-AV560 : 40
(8 ohms, 1 kHz)

Inputs

		Sensitivity	Impedance	S/N (weighting network, input level)
PHONO	MM	2.5 mV	50 kilohms	87 dB, 79 dB** (A, 2.5 mV)
	MC*	0.25 mV	100 ohms	69 dB, 78 dB** (A, 0.25 mV)
CD/AUX VIDEO 1,2 (audio) TAPE 1,2		150 mV	50 kilohms	105 dB 86 dB* (A, 150 mV)

*STR-AV760 only ** '78 IHF

Outputs
REC OUT 1, 2
Voltage 150 mV
Impedance 10 kilohms
SPEAKER A, B
Accepts speakers of 4 – 16 ohms.
HEADPHONES
Accepts low and high impedance headphones.

Video inputs/outputs
VIDEO IN 1, 2 : 1 $V_{p\text{-}p}$, 75 ohms, unbalanced
VIDEO OUT 1, MONITOR VIDEO OUT } 1 $V_{p\text{-}p}$, 75 ohms, unbalanced

Tone controls BASS
±8 dB at 100 Hz
TREBLE
±8 dB at 10 kHz

Subsonic filter 6 dB/octave attenuation below 15 Hz

FM tuner section

Tuning range 87.5 MHz - 108 MHz

Antenna terminals
75 ohms, unbalanced (2)

Intermediate frequency
10.7 MHz

Sensitivity at 50 dB quieting
16.1 dBf, 3.5 μV (mono)
38.3 dBf, 45 μV (stereo)

Usable sensitivity
10.3 dBf, 1.8 μV (IHF)

Signal-to-noise ratio
82 dB (mono), 76 dB (stereo)

Harmonic distortion
0.05% (mono), 0.1% (stereo) at 1 kHz, WIDE

IM distortion 0.05% (mono), 0.1% (stereo), WIDE

Separation 50 dB at 1 kHz, WIDE

Frequency response
30 Hz - 15 kHz $^{+0.5}_{-1.5}$ dB

Selectivity 65 dB at 400 kHz, NORMAL
30 dB at 400 kHz, WIDE

Capture ratio 1.2 dB

AM suppression ratio
54 dB

Image response ratio
80 dB

IF response ratio
90 dB

Spurious response ratio
100 dB

RF intermodulation
65 dB

Searching threshold
LOW 30 dBf, MID 40 dBf, HIGH 50 dBf

AM tuner section

Tuning range 530 — 1,610 kHz (with the AM tuning interval set at 10 kHz)
531 — 1,602 kHz (with the AM tuning interval set at 9 kHz)

Antenna Layout-free antenna
External antenna terminal

Intermediate frequency
450 kHz

Usable sensitivity
50 dB/m, layout-free antenna (at 1,000 kHz)
100 μV, external antenna (at 1,000 kHz)

Signal-to-noise ratio
54 dB (at 50 mV/m)

Harmonic distortion
0.3% (at 50 mV/m, 400 Hz)

Selectivity 40 dB (10 kHz)
35 dB (9 kHz)

Searching threshold
55 dB/m

General

System Tuner section : PLL quartz-locked digital synthesizer system
Amplifier section : low-noise NF type equalizer amp, pure complementary SEPP

Power requirements
120 V ac, 60 Hz

Memory back-up power : Lithium battery, 3 V dc

Power consumption
STR-AV760 : 170 W
STR-AV560 : 150 W
In standby condition : 5 W

AC outlets Two switched (total 100 watts)

Dimensions Approx. 430 x 105 x 345 mm (w/h/d) (17 × 4¼ × 13⅝ inches) including projecting parts and controls

Weight
STR-AV760 :
Approx. 8.6 kg (19 lb) net
Approx. 10.1 kg (22 lb 5 oz) in shipping carton
STR-AV560 :
Approx. 8 kg (17 lb 11 oz) net
Approx. 9.5 kg (21 lb) in shipping carton

www.hifiengine.com

FEATURES

The STR-AV560/AV760 is a combined receiver and audio/video control center, which makes it possible to connect to your audio system one hi-fi video cassette recorder for both playback and recording and another for playback.

- The ASP (Audio Signal Processor) IC developed by Sony can digitally control the tone and volume settings, and permits electronic program source selection with a single touch of a key. The ASP IC also offers great flexibility — an acoustic memory function, an ability to store and recall three sets of tonal adjustments and a volume fade-in function, an ability to set the volume to the minimum level when the power is turned on and automatically increase it to a previously set level.
- A quartz-locked digital synthesizer system with a sophisticated Phase-Locked Loop (PLL) circuit allows extremely precise tuning of FM and AM stations with an electronic digital readout on the frequency display. A total of 10 stations can be preset; all receivable stations can be located and scanned.
- Video tapes can be edited from the hi-fi video cassette recorder connected to the VIDEO 2 jacks to the hi-fi video cassette recorder connected to the VIDEO 1 jacks. While video tapes are being edited, other program sources can be enjoyed. Audio dubbing is also possible.
- The computerized logic tuning system automatically selects the appropriate FM mode and FM IF band according to the signal strength of the station received.
- The station spectrum display allows you to identify at a glance the frequencies of all preset stations or stations which are receivable with station scan tuning.
- A CATV cable can be connected directly to the receiver, facilitating FM simulcast program reception.
- The optional RM-S760 remote commander allows you to control from a distance all components connected to the receiver.

SAFETY CHECK-OUT (US Model)

After correcting the original service problem, perform the following safety check before releasing the set to the customer:
Check the antenna terminals, metal trim, "metallized" knobs, screws, and all other exposed metal parts for AC leakage. Check leakage as described below.

LEAKAGE TEST

The AC leakage from any exposed metal part to earth ground and from all exposed metal parts to any exposed metal part having a return to chassis, must not exceed 0.5 mA (500 microampers). Leakage current can be measured by any one of three methods.

1. A commercial leakage tester, such as the Simpson 229 or RCA WT-540A. Follow the manufacturers' instructions to use these instruments.
2. A battery-operated AC milliammeter. The Data Precision 245 digital multimeter is suitable for this job.
3. Measuring the voltage drop across a resistor by means of a VOM or battery-operated AC voltmeter. The "limit" indication is 0.75 V, so analog meters must have an accurate low-voltage scale. The Simpson 250 and Sanwa SH-63Trd are examples of a passive VOM that is suitable. Nearly all battery operated digital multimeters that have a 2 V AC range are suitable. (See Fig. A)

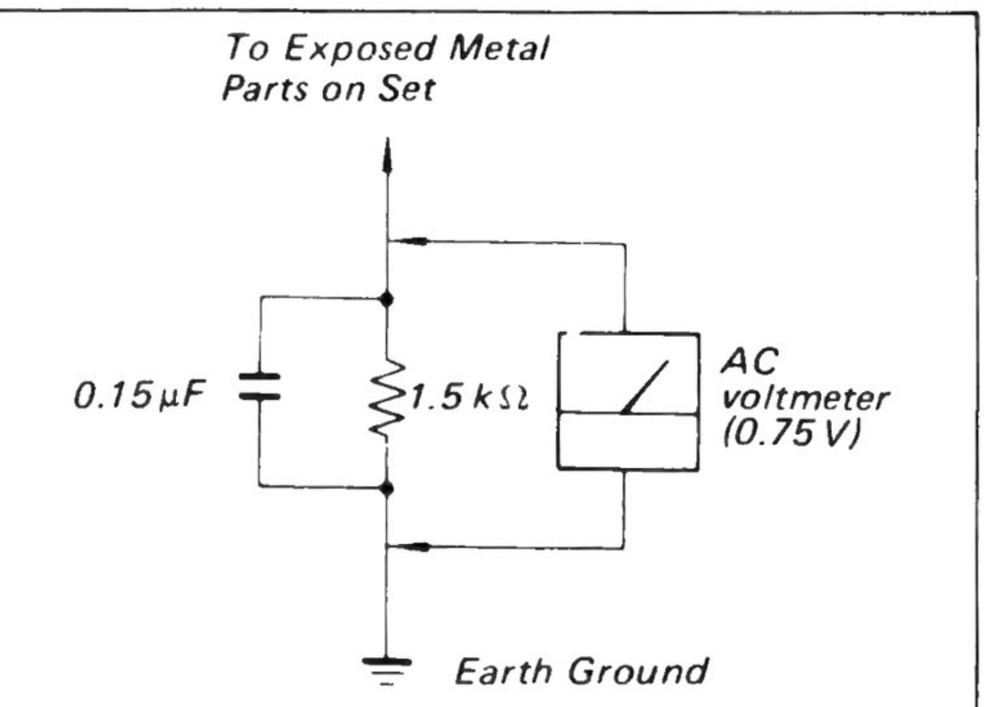

Fig. A. Using an AC voltmeter to check AC leakage.

www.hifiengine.com

FUNCTION

LOCATION AND FUNCTION OF CONTROLS

Amplifier section

Photo: STR-AV760

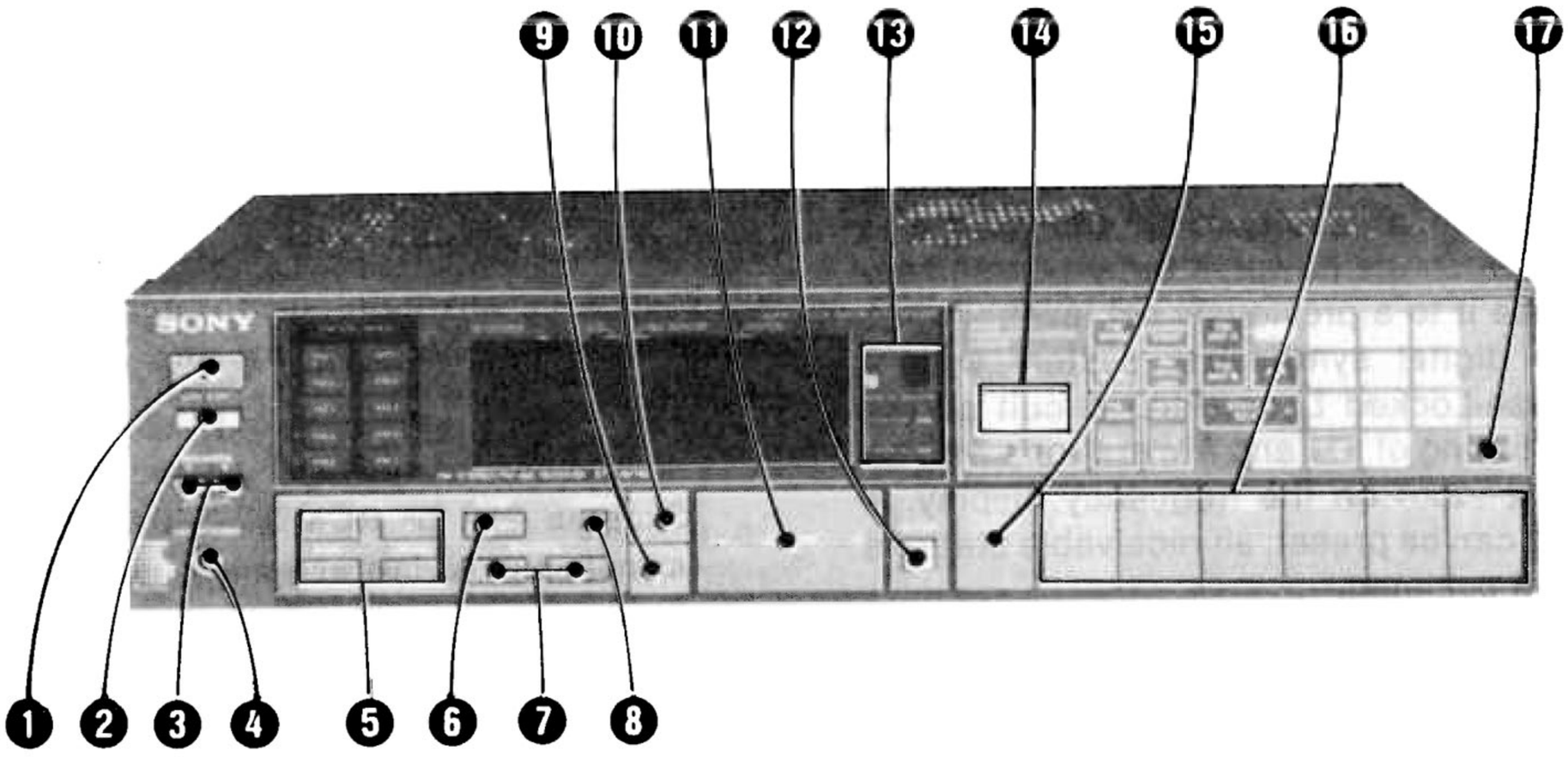

❶ MAIN POWER switch
Depress this switch (⏏ON) to turn on the mains power. The STANDBY indicator will light up. Press it again (⏏OFF) to turn it off.
If the MAIN POWER switch has not been turned on, you cannot turn on the receiver and connected components by pressing the SYSTEM POWER switch, or operate them with the optional remote commander.

❷ SYSTEM POWER switch
Press this switch to turn the receiver and connected components on and off.
When this switch is pressed, the function selected last or the last station to be received will be displayed.
You can operate the switch from a distance with the remote commander.

❸ SPEAKERS selector
Select speaker system A or B, or both.

❹ HEADPHONES jack
Accepts any low or high impedance stereo headphones. For headphone monitoring only, keep both SPEAKERS switches OFF.

❺ BASS and TREBLE TONE control keys
Control the prominence of bass and treble response.

❻ SUBSONIC FILTER key
Press this key to reduce unwanted subsonic noise component created by warped records, etc. The SUBSONIC indicator will appear in the display window and the filter will cut off any input signals below 15 Hz at a 6 dB-per-octave rate. Press the key again to disengage it.

❼ BALANCE control keys
Governs the amount of sound coming from each paired speaker to get optimum stereo effect.
Pressing the R key will decrease the left channel volume, and pressing the L key will decrease the right channel volume.

❽ MEMORY key
When this key is pressed, the number of the acoustic memory key will flash and the three acoustic settings can be stored.

❾ FLAT key
Press this key to disengage the acoustic setting for a flat frequency response.

❿ ACOUSTIC key
After pressing the MEMORY key, press this key to store the tone settings. Once they have been set, you can recall these acoustic settings instantly.

www.hifiengine.com

⓫ VOLUME control key
Regulates the overall sound level. Pressing its right-side (+) will increase the sound level, and pressing its left-side (–) will decrease it.

⓬ MUTING key
Press this key to attenuate the sound level by ∞. The MUTING indicator will appear in the display window. Press again to disengage the key and you can restore the same listening level as before. You will find this function useful when lowering the tonearm onto a record or when you answer the telephone.

⓭ Indicators for remote control
REMOTE SENSOR: Receives the infrared ray command of the remote commander.
STANDBY indicator: Lights when the mains power is turned on. The receiver is in the standby mode for remote control operation.
RECEIVED indicator: Blinks when a key on the remote commander is pressed.

⓮ EDIT keys
AUDIO: For recording an audio program source selected by the function select key on a video tape or adding that source to a video tape while editing from VCR 2 to VCR 1. The indicator will light up.
VIDEO: For editing a video tape from VCR 2 to VCR 1. The indicator will light up.

⓯ TAPE 2 (MONITOR) key
Press this key to listen to a tape deck connected to the TAPE 2 inputs on the rear panel. The MONITOR indicator will light up. When listening to program sources other than a taped program of a tape deck connected to the TAPE 2 inputs, press this key again to disengage it. The indicator goes out.

⓰ Function select keys
Press one of these keys to select a desired program source other than a taped program of a tape deck connected to TAPE 2 inputs.
The associated indication of the pressed key will appear in the display window.
PHONO: For record programs (connected to PHONO inputs).
TUNER: For broadcasting programs.
When pressing this key, the frequency of the last station received will appear.
CD/AUX: For compact disc or auxiliary programs (connected to CD/AUX inputs).
VIDEO 1: For video programs of VCR 1 (connected to VIDEO 1 inputs).
VIDEO 2: For video program of VCR 2 (connected to VIDEO 2 inputs).
TAPE 1 (TAPE 1 → 2): For taped programs of tape deck 1 (connected to TAPE 1 inputs).

⓱ CARTRIDGE select key (STR-AV760 only)
For moving-coil type cartridges, press this key so that the MC indicator is displayed. For moving-magnet type cartridges, press this key again so that the MM indicator is displayed.

To change the AM tuning interval
The AM tuning interval is preset at the factory to 10 kHz to match the frequency allocation system of your country.
If you use the receiver where the frequency allocation system is based on a 9 kHz interval, change the interval as follows.
1 Press the MAIN POWER and SYSTEM POWER switches to turn on the unit.
2 Tune in any AM station.
3 Press the MAIN POWER switch to turn it off.
4 While pressing the STATION SCAN + key, press the MAIN POWER switch to turn it on.
The AM tuning interval has been set to 9 kHz. To reset the interval to 10 kHz, follow the same procedure.

Note
When the interval is changed, all preset stations which you have memorized to the number keys and all located stations will be erased in addition to the acoustic memory previously set. After changing the interval, be sure to preset or search the stations and set the acoustic memory again.

www.hifiengine.com

Tuner section

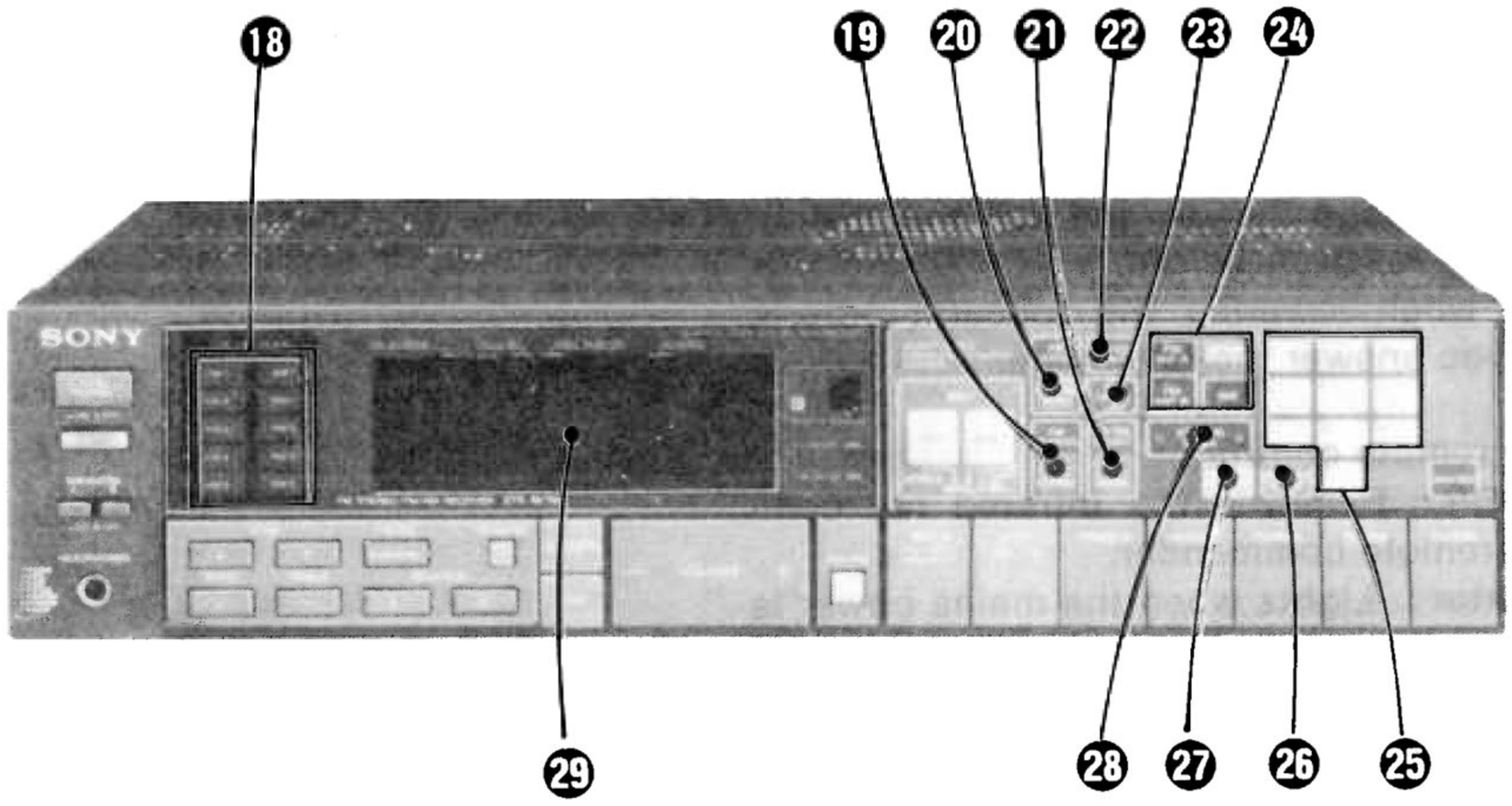

⑱ STATION INDEX (station identification) windows
Station labels (supplied) identifying stations to the number keys memorized can be placed in these windows.

⑲ FM IF BAND key
When an FM station is first tuned in (except by preset tuning), the receiver determines if there is likely to be interference from an adjacent station. If there is not, the IF band is automatically changed from normal (⎍⎾⎿) to wide (⎾⎾⎿).
Press this key to change the band manually. The IF band selected will be indicated in the display window.

⑳ FM MODE key
When an FM station is tuned in, the receiver determines the signal strength of the station and is automatically set to the appropriate FM mode : STEREO for a strong station, HI-BLEND for a slightly weak station.
Press this key when you wanto to change the FM mode manually so that the desired mode indicator is displayed.
HIGH-BLEND : When receiving a slightly weak station. Stereo effects at higher frequencies will be slightly reduced but noise will be reduced.
MONO : When receiving very weak FM station. There is no stereo effect but the reception will be more stable and noise will be reduced.

㉑ METER SELECT key
Press this key to change the ATT (volume attenuation) indicator to the SIGNAL (signal strength) indicator, or vice versa.

㉒ SEARCH START key
Press this key to start searching receivable stations.

㉓ FM LEVEL select key
Press this key to select the level of FM stations to be searched. For searching both strong and weak stations, press this key so that the LOW indicator is displayed. For searching strong and mid-level stations, press it so the MID indicator is displayed. For strong stations only, press it so the HIGH indicator is displayed.

㉔ Band/antenna select keys
Press the AM key to receive AM broadcasting.
Press the FM ANT-A key to receive FM broadcasting using the FM antenna connected to the CATV ANT-A connector or to receive cable TV programs when the CATV cable is connected.
Press the FM ANT-B key to receive FM broadcasting, using the FM antenna connected to the FM ANT-B connector.

㉕ DIRECT ACCESS TUNING/PRESET TUNING keys (number keys)
For direct access tuning (the number keys serve as DIRECT ACCESS TUNING keys) : After pressing the FM ANT-A, FM ANT-B or AM key, input the frequency of the desired station by pressing these keys.
For preset tuning (the number keys serve as PRESET TUNING keys) : After pressing the MEMORY PRESET key, press to preset the station being received. Also press to call up a station which has been memorized in this way.

www.hifiengine.com

㉖ MEMORY SCAN key
Press to scan automatically the stations memorized on the number keys.

㉗ MEMORY PRESET key
To memorize the frequency of a station, when the station is received, press this key, then press the number key.

㉘ STATION SCAN key
Press to scan the receivable stations located.

㉙ Display window

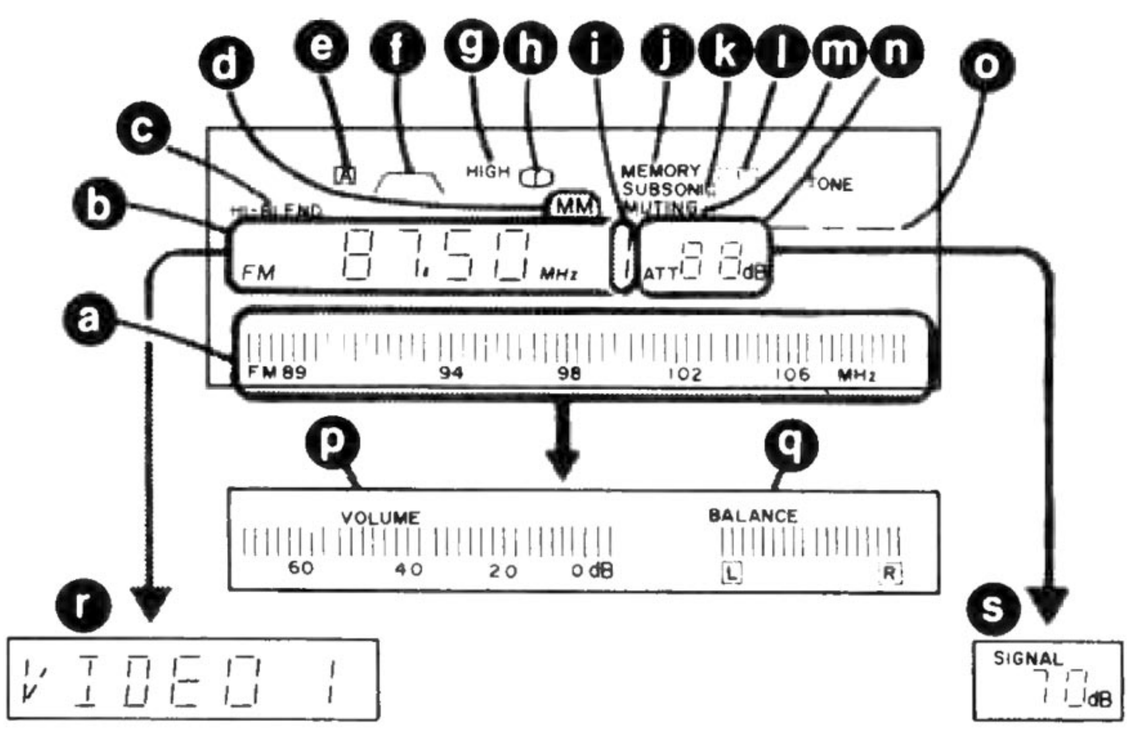

ⓐ Station spectrum display
In TUNER mode, this display will appear instead of the VOLUME and BALANCE indicators. The frequencies of the receivable stations located or the stations memorized to the number keys are shown by the vertical bars. When a station is tuned in, the corresponding bar flashes.

ⓑ Band/frequency display
The band and frequency being received are displayed here.

ⓒ FM MODE indicator
The indicaton of the selected FM mode, HIGH-BLEND or MONO, will appear. STEREO indication will appear when a stereo program is tuned in.

ⓓ Cartridge type indicator
The type of cartridge selected by the CARTRIDGE select key is displayed.

ⓔ FM ANTENNA indicator
When you press the FM ANT-A key, [A] indication will appear. When you press the FM ANT-B key, [B] indication will appear.

ⓕ FM IF BAND indicator
The selected FM IF band is graphically indicated. /‾\ indication shows the IF band is wide or _/‾_ indication shows the IF band is normal.

ⓖ FM LEVEL indicator
The FM station level selected by the FM LEVEL select key is displayed here.

ⓗ VIDEO MONITOR indicator
The indication of a selected video function key [1] or [2] appears.

ⓘ Preset number key indicator
When a number key is pressed, its number appears here. When the MEMORY SCAN key is pressed, the numbers of the number key change in sequence and the corresponding bar flashes.

ⓙ MEMORY indicator
Appears when you press the MEMORY PRESET key.

ⓚ SUBSONIC indicator
Appears when you press the SUBSONIC FILTER key.

ⓛ ACOUSTIC indicator
With each press of the ACOUSTIC key to call up the acoustic setting memory, the number of the memorized key appears.

ⓜ MUTING indicator
Appears when you press the MUTING key.

ⓝ Volume attenuation level indicator
The volume is indicated by the attenuated level. 0 dB is the maximum volume and □□ dB is the minimum volume.

ⓞ TONE indicator
The bars move up and down, depending on the tone control settings, graphically showing the tone control characteristics.
A straight bar graph indicates a flat frequency response.

ⓟ VOLUME indicator
The volume level is indicated by the number of vertical bars. In TUNER mode, when you press the VOLUME control key, the station spectrum display disappears and the VOLUME indicator appears. A few seconds later, the display automatically changes back to the station spectrum display.

ⓠ BALANCE indicator
The bar move between L and R on the indicator to indicate the relative strength of the volume at the left and right channels. In TUNER mode, when you press the L or R BALANCE control key, the station spectrum display disappears and the BALANCE indicator appears. A few seconds later, the display automatically changes back to the station spectrum display.

ⓡ Function indicator
When any of the function select keys other than TUNER and TAPE 2 (MONITOR) is pressed, the corresponding indication appears instead of the band/frequency display.

ⓢ SIGNAL indicator
When you press the METER SELECT key, the volume attenuation level indicator disappears and the SIGNAL indicator appears. The received signal strength is indicated in decibels (dB).

www.hifiengine.com

Rear panel

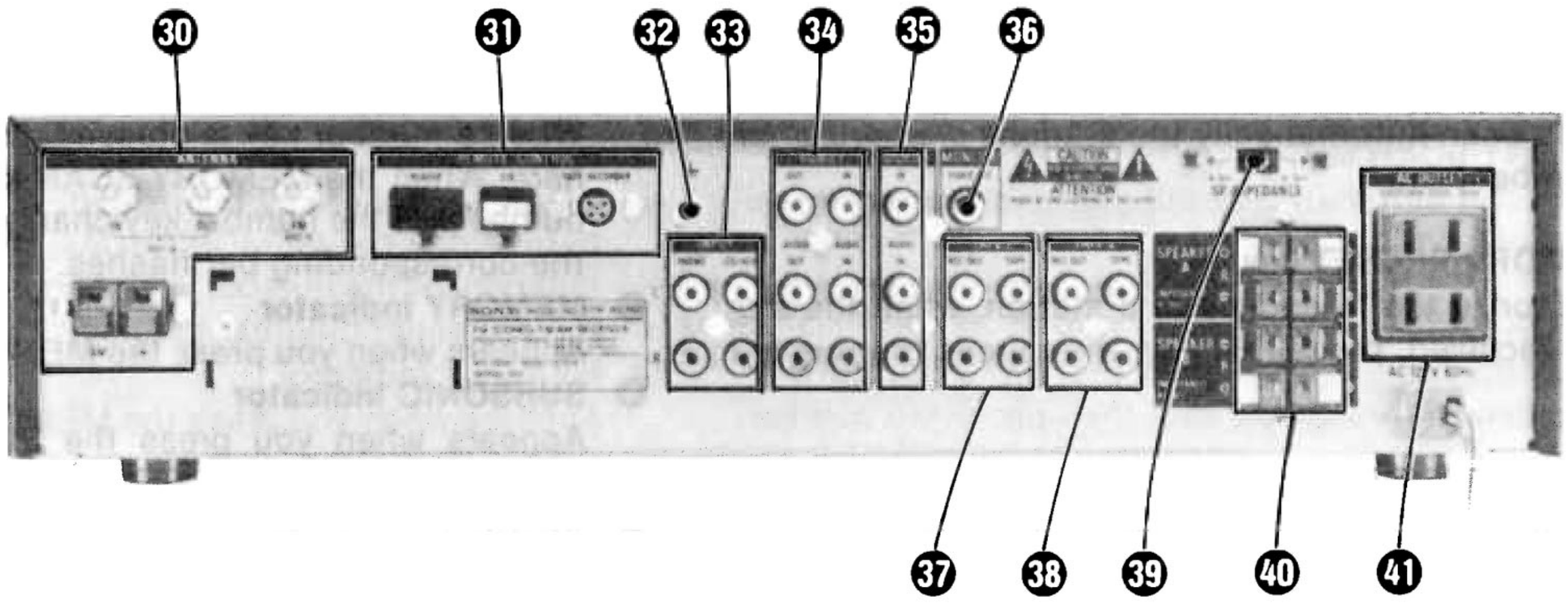

㉚ ANTENNA terminals

AM and ⏚ (antenna ground) terminals : Connect the supplied layout-free AM external ferrite bar antenna.

CATV ANT-A IN connector (F type) : Connect an FM external antenna or a CATV cable.

CATV ANT-A OUT connector (F type) : When a CATV cable is connected to the IN connector, connect to the VHF IN of the VCR or of the TV tuner. When an FM external antenna is connected to the IN connector, this connector can feed signals to another FM tuner.

FM ANT-B connector (F type) : For FM reception connect an FM external antenna here.

㉛ REMOTE CONTROL connectors

By connecting the remote control cords supplied with the optional RM-S760 remote commander, you can remotely control some functions of the receiver and the connected equipment.

PLAYER connector (6 pin) : Connect to the remote control jack of a turntable system.

Control S connector (4 pin) : Connect to the remote control connector of a CD player or other audio component equipped with 4-pin control S connector.

TAPE RECORDER (5 pin) : Connect to the remote control connector of a tape deck.

㉜ ⏚ (phono ground) connector

Connect the ground wire of a turntable system.

Note

In some particular MM cartridges, the ground for signal is connected to the ground for cartridge body. If this type of cartridge should be installed to a metal cartridge shell, current will flow through the tonearm ground in a loop and will cause hum noise. In this case, disconnect the turntable ground wire from the ⏚ terminal, or disconnect the ground for cartridge body from the ground for signal.

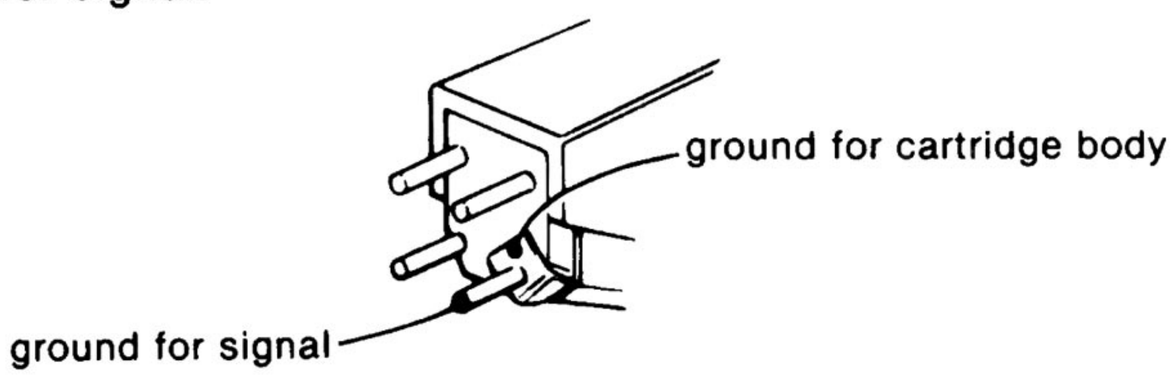

㉝ INPUT jacks (phono jack)

PHONO inputs : Accept the outputs of a turntable system.

CD/AUX (compact disc/auxiliary) inputs : Accept the outputs of a compact disc player or input sources such as a tape deck for playback only.

㉞ VIDEO 1 jacks (phono jack)

OUT jack : Accepts the video input of a VCR.

IN jack : Accepts the video output of a VCR.

AUDIO OUT jacks : Accept the audio inputs of a VCR for recording the audio program source onto the video tape.

AUDIO IN jacks : Accept the audio outputs of a VCR for listening to the recorded video tape.

㉟ VIDEO 2 jacks (phono jack)

IN jack : Accepts the video output of a TV tuner or a playback VCR.

AUDIO IN jacks : Accept the audio outputs of a TV tuner or a playback VCR.

㊱ MONITOR output (phono jack)

Accepts the video input of a component TV.

㊲ TAPE 1 jacks (phono jack)

REC OUT jacks : Accept the line inputs of tape deck 1 for tape recording.

TAPE inputs : Accept the line outputs of tape deck 1 for playing back a tape.

㊳ TAPE 2 jacks (phono jacks)

REC OUT jacks : Accept the line inputs of tape deck 2 for tape recording.

TAPE inputs : Accept the line outputs of tape deck 2 for playing back a tape.

㊴ SP IMPEDANCE (speaker impedance) selector

When connecting one pair of speaker systems with an impedance of 4 - 6 ohms, set to 4 - 6 ohm position or with an impedance of 8 - 16 ohms, set to 8 - 16 ohm position. When connecting two pairs of speaker systems, set to the lower impedance position.

㊵ SPEAKER A, B connectors

For connecting a speaker system or two pairs of speaker systems. System A and system B can be selected by means of the front panel SPEAKERS selectors.

㊶ AC OUTLETs (SWITCHED TOTAL 100W)

These are used to power other audio components whose total power consumption is less than 100W .

www.hifiengine.com

VIDEO SYSTEM CONNECTION

Before making connections, refer to the instruction manual of the VCR.

Hi-fi VCR + **Component TV** + **TV tuner**

Connect a hi-fi VCR to VIDEO 1 outputs/inputs for recording and playback.
A TV tuner has plural video inputs and outputs used for enhanced system connection of video equipment so that you can enjoy various video programs.

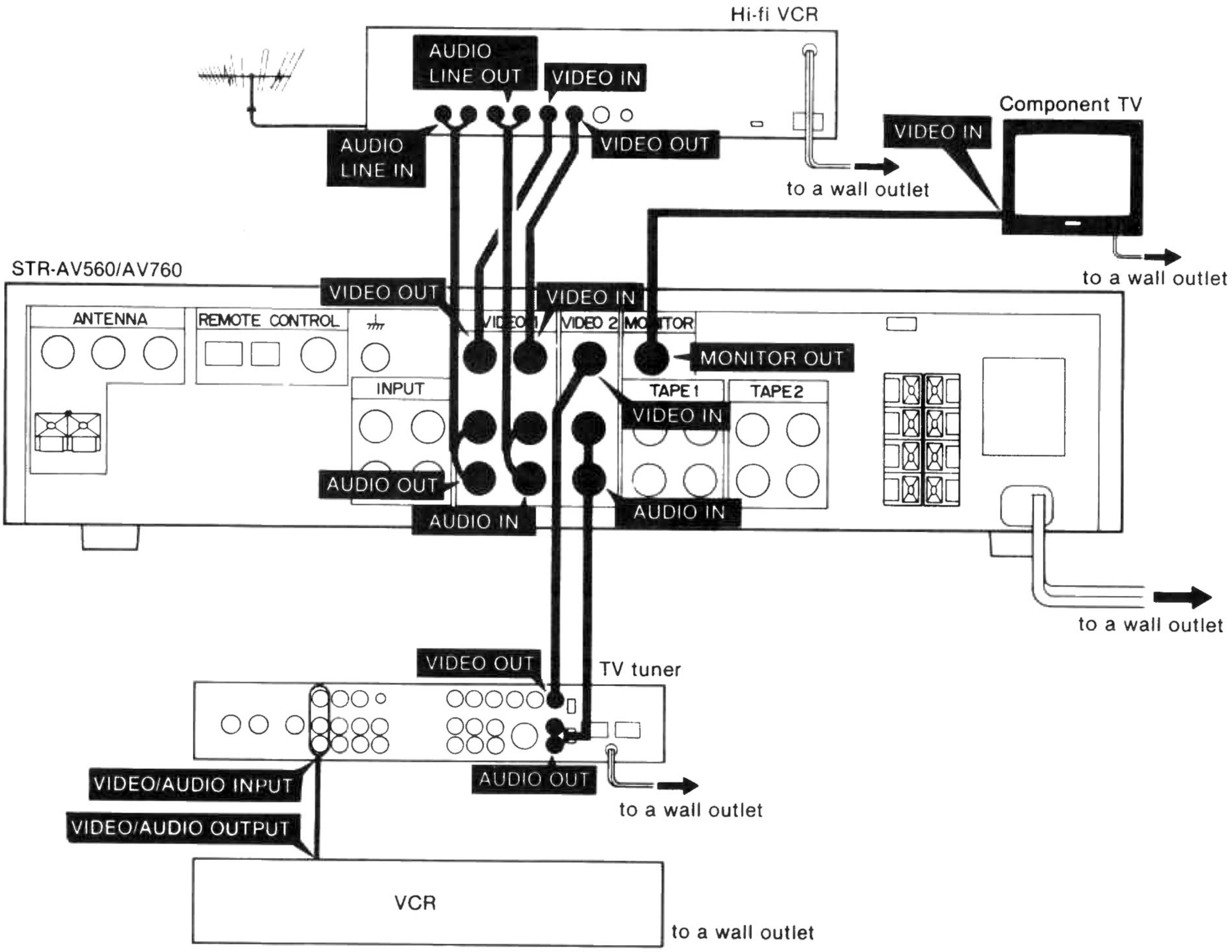

Note
When connecting a second VCR without a TV tuner, connect it to the VIDEO 2 jacks.

www.hifiengine.com

CATV SYSTEM CONNECTION

Hi-fi VCR + **Component TV** + **TV tuner**

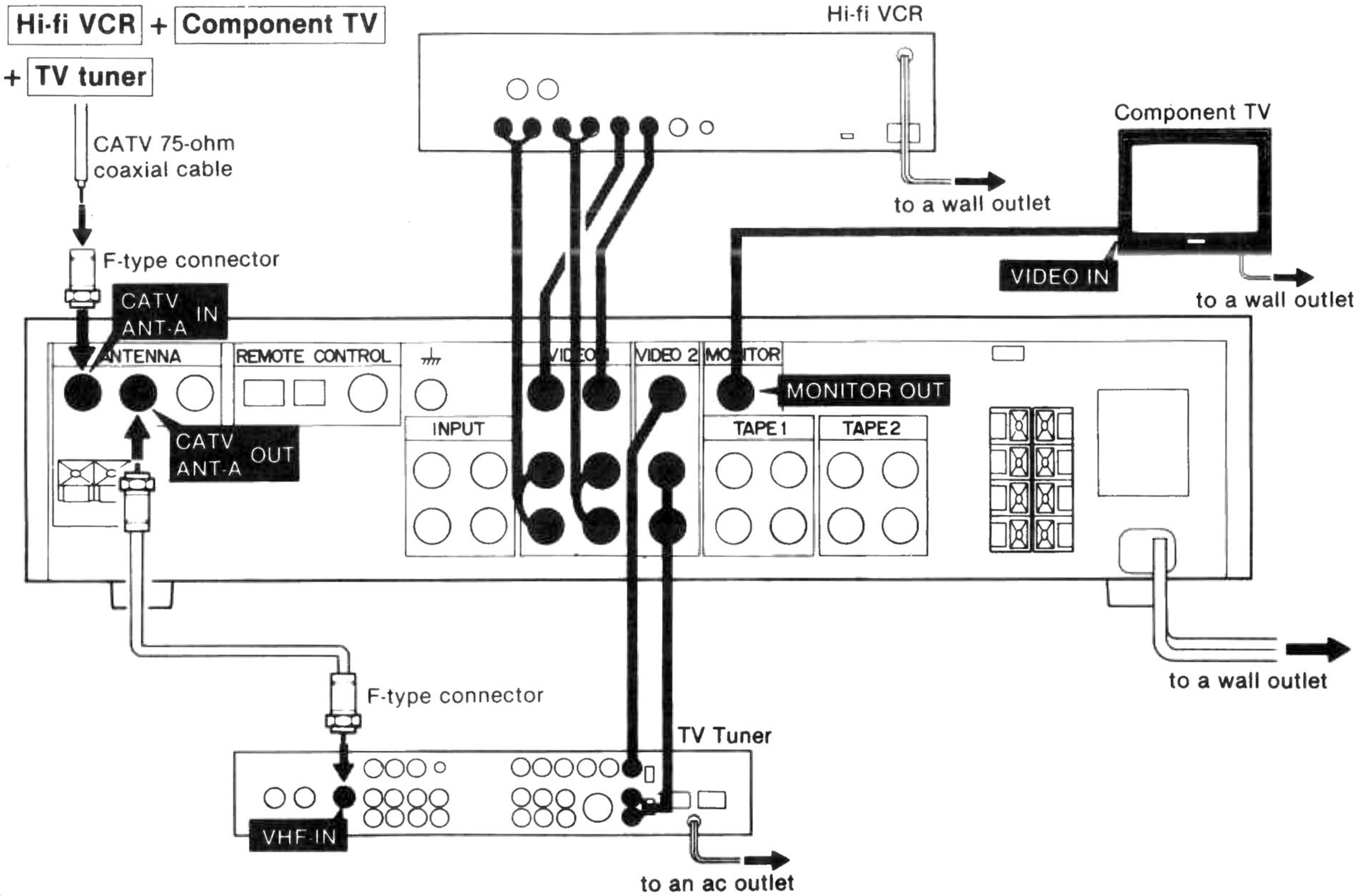

Hi-fi VCR + **Conventional TV**

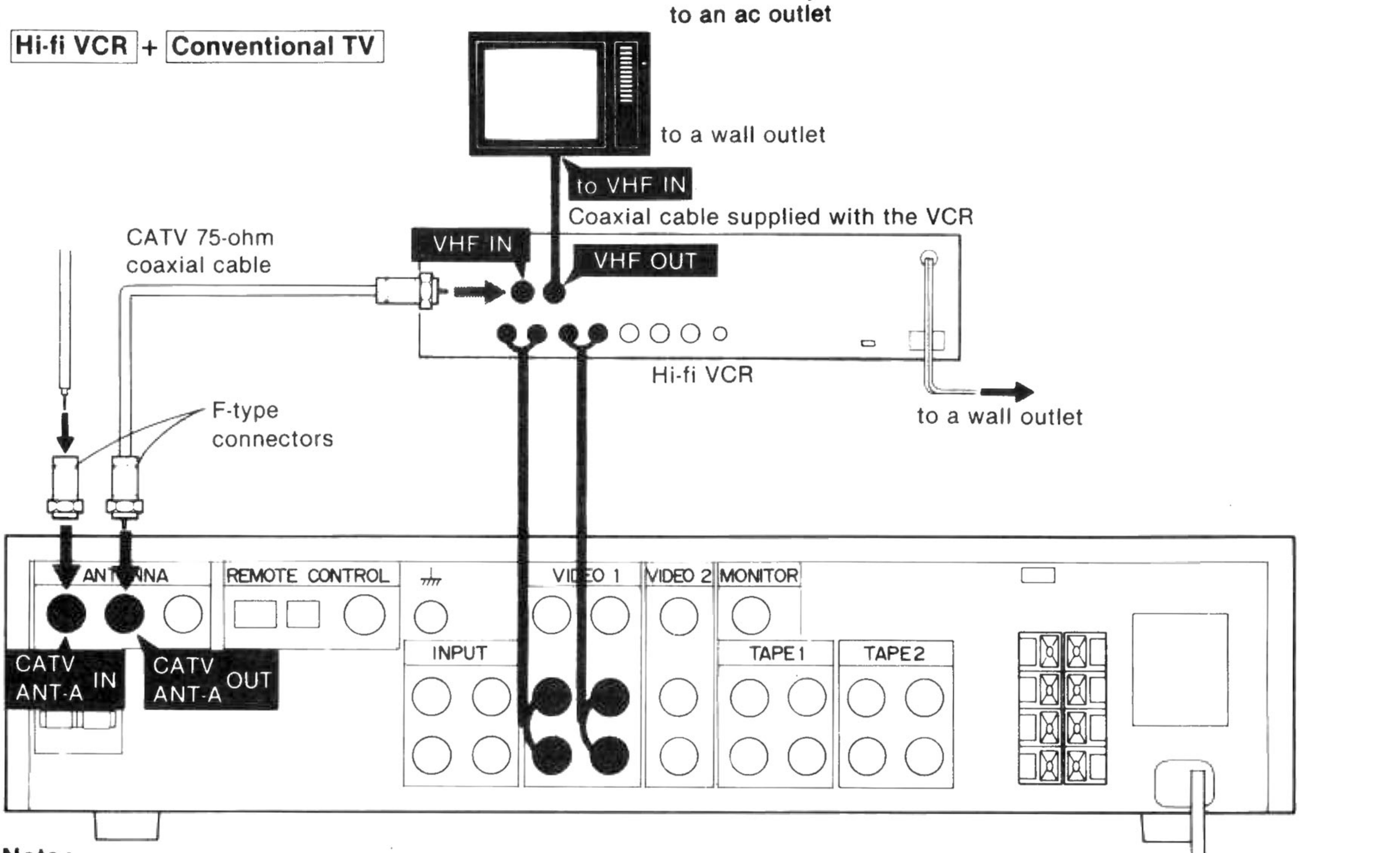

Note :
When noise appears in the TV display because of poor reception, use an antenna booster for better reception.

www.hifiengine.com

TO RECEIVE FM/AM BROADCAST

DIRECT ACCESS TUNING

When you know the frequency of the station to be received, input it with the number keys.

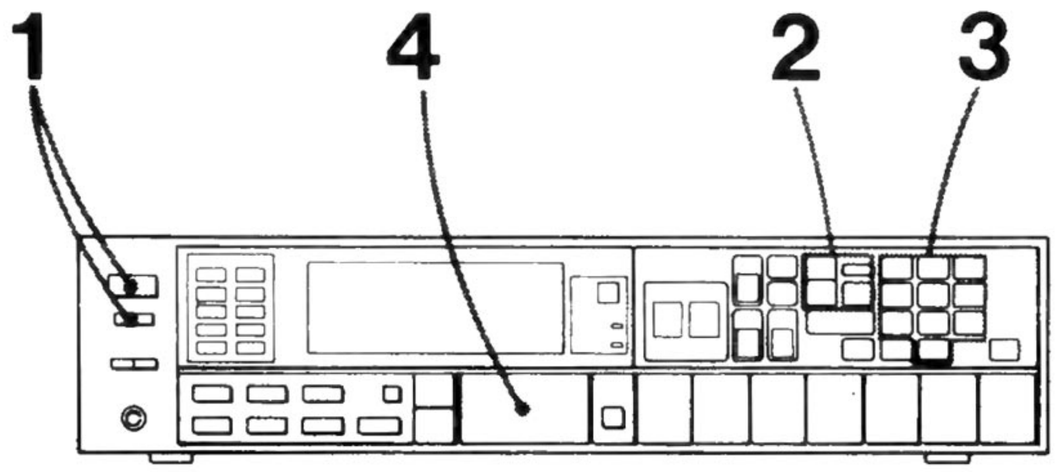

1 Depress the MAIN POWER switch and press the SYSTEM POWER switch.
2 Press the FM ANT-A, FM ANT-B or AM key. (The "0" indication will flash.)
3 Input the frequency using the number keys.

Example 1: FM 108.00 MHz

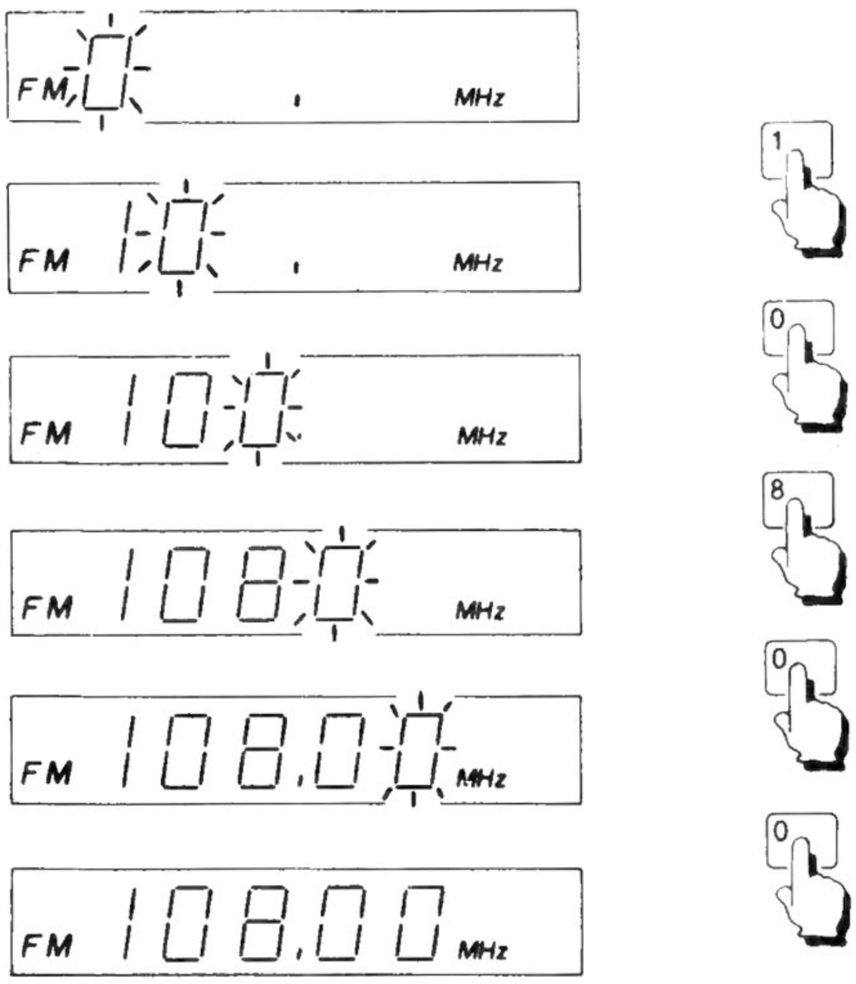

Example 2: AM 1350 kHz

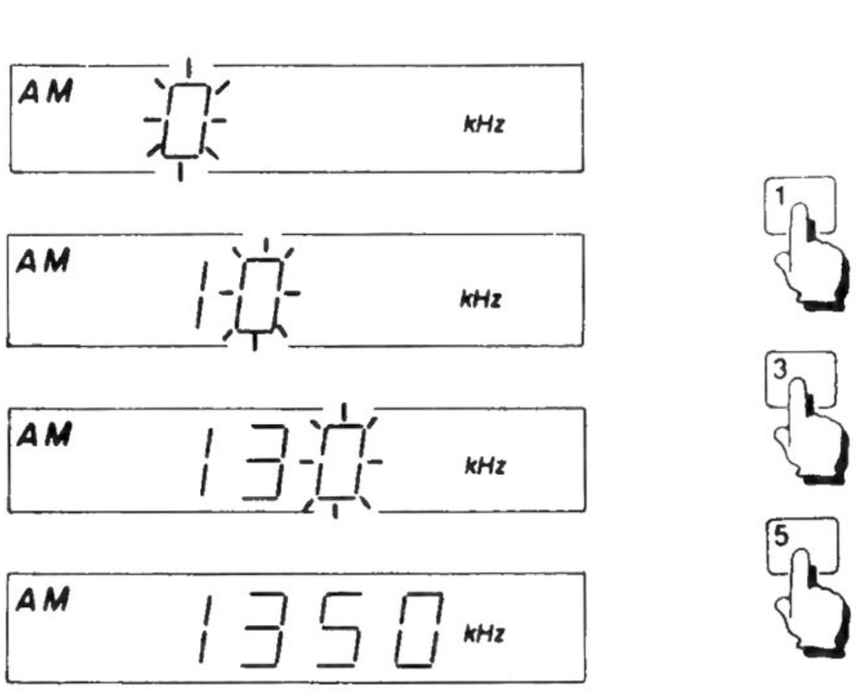

4 Adjust the VOLUME control key to your preference.

Notes on AM direct access tuning

- As the AM tuning interval is preset at the factory to 10 kHz, you need not input the last digit "0" of the frequency when the first two or three digits are input.
- If you change the 10 kHz AM tuning interval to 9 kHz, input the frequency to the last digit. See "How to change the AM tuning interval" on page 5.

If you input a wrong frequency

- Press the appropriate band/antenna select key again and input the correct frequency.
- If you input a frequency outside the receiver's frequency range (FM 87.5 to 108 MHz; AM 530 to 1,610 kHz), the figures will flash in the display window. In this case, press the appropriate band/antenna select key and input the correct frequency.

STATION SEARCHING

Before station scan tuning, you can find out receivable frequencies of stations.

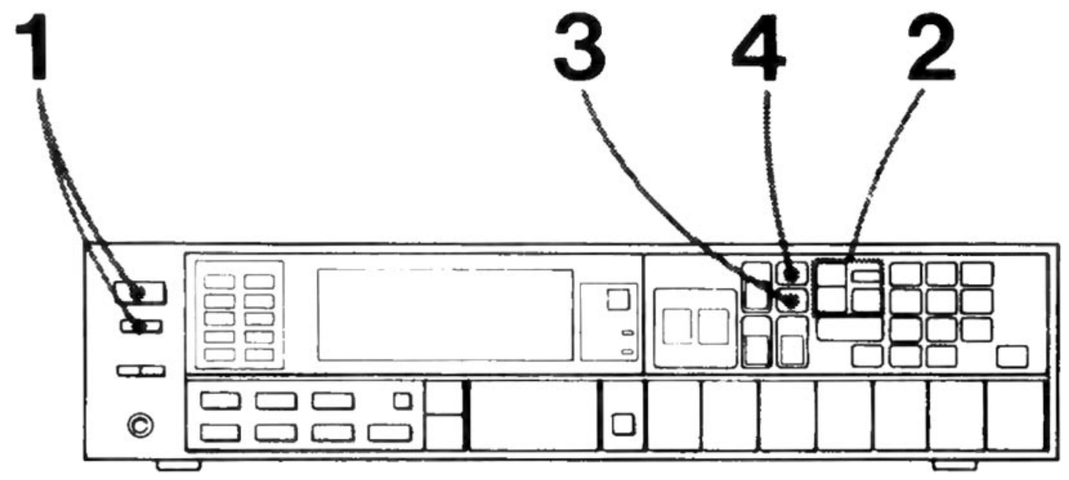

1 Depress the MAIN POWER switch and press the SYSTEM POWER switch.
2 Press the FM ANT-A, FM ANT-B or AM key. The "0" indication will flash.
3 For FM stations, select the level of the stations to be searched with the FM LEVEL select key:
HIGH for strong stations only, MID for strong and mid-level stations or LOW for all strong and weak stations.
4 Press the SEARCH START key.
The receiver searches receivable stations in the band from the lowest frequency to the highest and the stations located are indicated by the vertical bars on the station spectrum display.
Searching will stop automatically at the lowest-frequency station located.

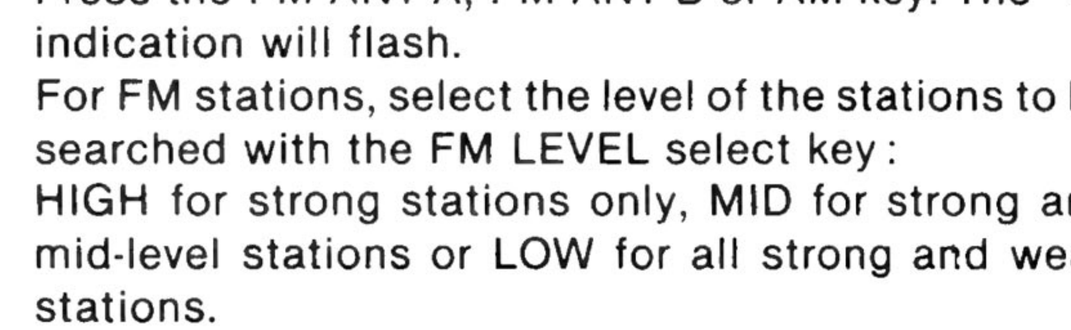

www.hifiengine.com

When only a few stations or none located, change the level of the stations to be searched for with the FM LEVEL select key and press the SEARCH START key again.

Repeat these steps for each band (FM and AM).
Once the stations are located, they are retained in memory.

Note
If you change the AM tuning interval, the searched station memory will be erased. Search the stations again.

STATION SCAN TUNING

If you do not know the frequency of the station you want to listen to and you want to know all receivable stations in your area, use the scan tuning station.
Once the stations are located, you can hear quickly what kind of programs are being broadcast by the searched stations.

1 Press the FM ANT-A, FM ANT-B or AM key.
2 Press the STATION SCAN key.
Press the "+" side for higher frequencies or the "–" side for lower frequencies.
The searched stations are automatically tuned in for several seconds each and the corresponding bar flashes.
3 To stop scanning, press the MEMORY PRESET key.
The station will be tuned in continuously.

Note ;
For AM reception, we recommend seaching stations before station scanning.

To quickly tune in a roughly known frequency
You can quickly tune in an FM or AM station whose frequency is roughly known by using direct access tuning together with sweep tuning or manual tuning. Input the approximate frequency with the direct access tuning, then press either the "+" or "–" key. For example, if you believe your station is between AM 700 and AM 800 kHz, press AM, input 7 and press the "+" side, or press AM, input 8 and press the "–" side.

MEMORY PRESETTING

Once the frequencies of the stations you want to tune in are memorized, all you have to do is to press a number key.
A total of 10 stations can be memorized, one to each number key, in any desired sequence.

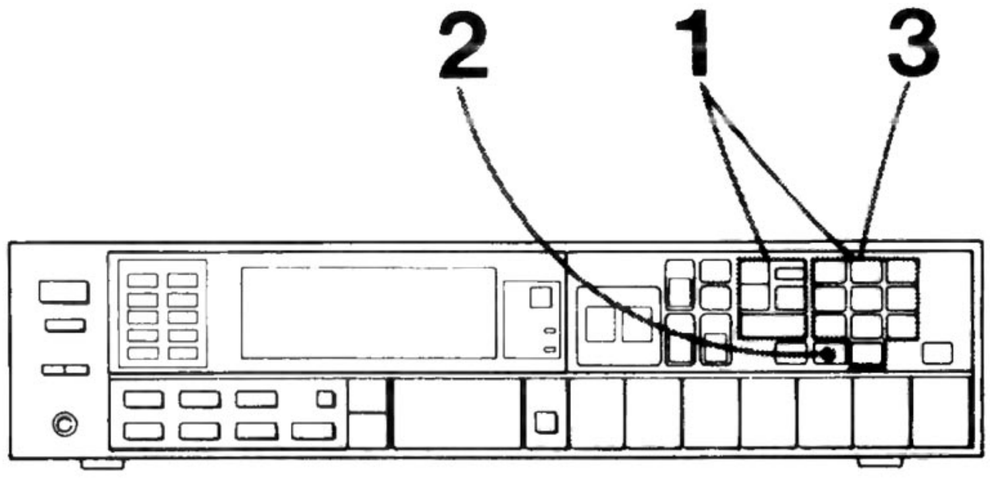

1 Tune in the desired station following the procedure described in "DIRECT ACCESS TUNING" or "STATION SCAN TUNING".
For an FM station, make sure that the IF band and FM mode settings are appropriate. If necessary, change the settings manually by pressing the FM IF BAND key and the FM MODE key.
These settings will be also memorized.
2 Press the MEMORY PRESET key. The MEMORY indication will appear for a few seconds.

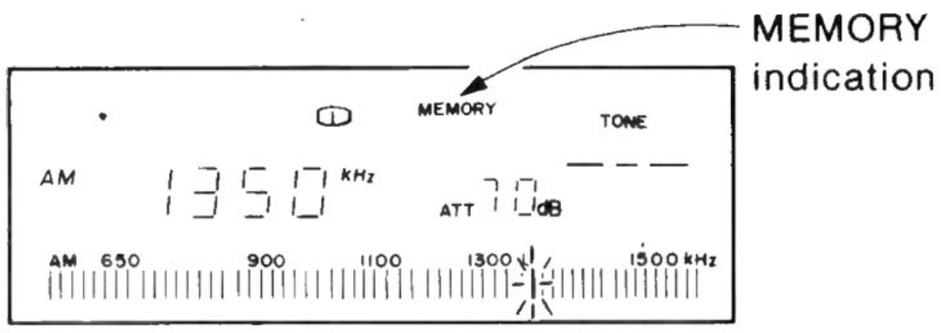

3 While the MEMORY indication is displayed, press the desired number key. The MEMORY indication will disappear and the number of the pressed key will appear.

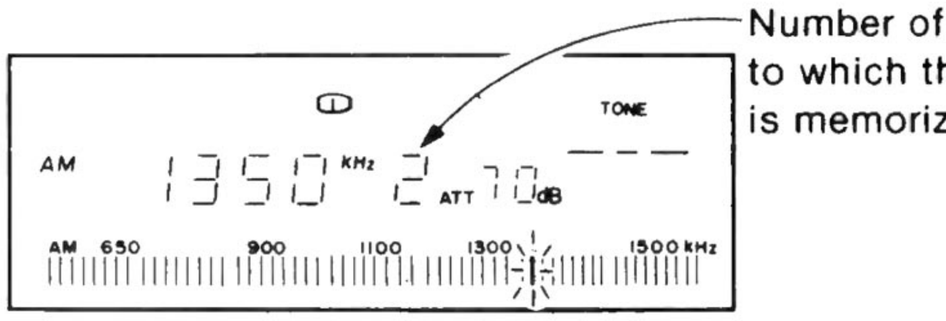

Repeat these steps for each number key.

Notes
- If the MEMORY indication has gone off, the station cannot be preset. Press the MEMORY PRESET key again and proceed to step 3.
- If you preset another station to a key on which you have already preset a station, the first station will be erased. You cannot erase a station without presetting another station.
- If you change the AM tuning interval, the preset station memory will be erased. Memorize stations again.
- The memorized FM IF band; and FM mode settings will be recalled when you tune in the station with station scan tuning.

www.hifiengine.com

PRESET TUNING

You can receive a station only by pressing one of the number keys to which the station has been memorized.

Memory of the last station received
This receiver includes a memory circuit to remember the station being received just before the power was turned off. The station will be automatically tuned in when the power is turned on again.

MEMORY SCANNING

This tuning allows you to quickly hear what kind of programs are being broadcast by the preset stations. When you press the MEMORY SCAN key, the number of the preset station will flash and the preset stations are automatically tuned in for several seconds each.

To stop scanning, press the appropriate number key while the station number is flashing and press the MEMORY SCAN key.

STATION LABEL INSERTION

Station labels are supplied to identify the preset stations.
Affix the labels as follows:

1 Pull out the station identification plate.
2 Affix a label to the plate as shown in the appropriate order.

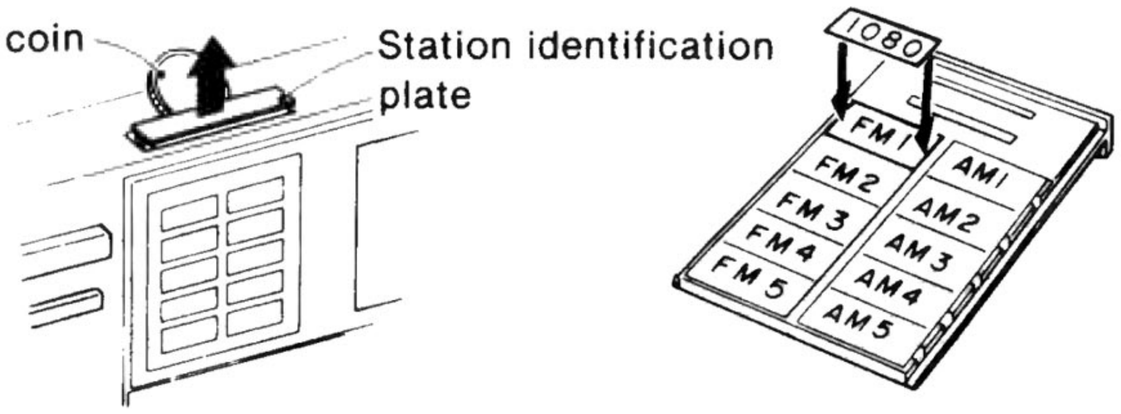

3 Replace the plate.

TO LISTEN TO PROGRAM SOURCES OTHER THAN BROADCASTS

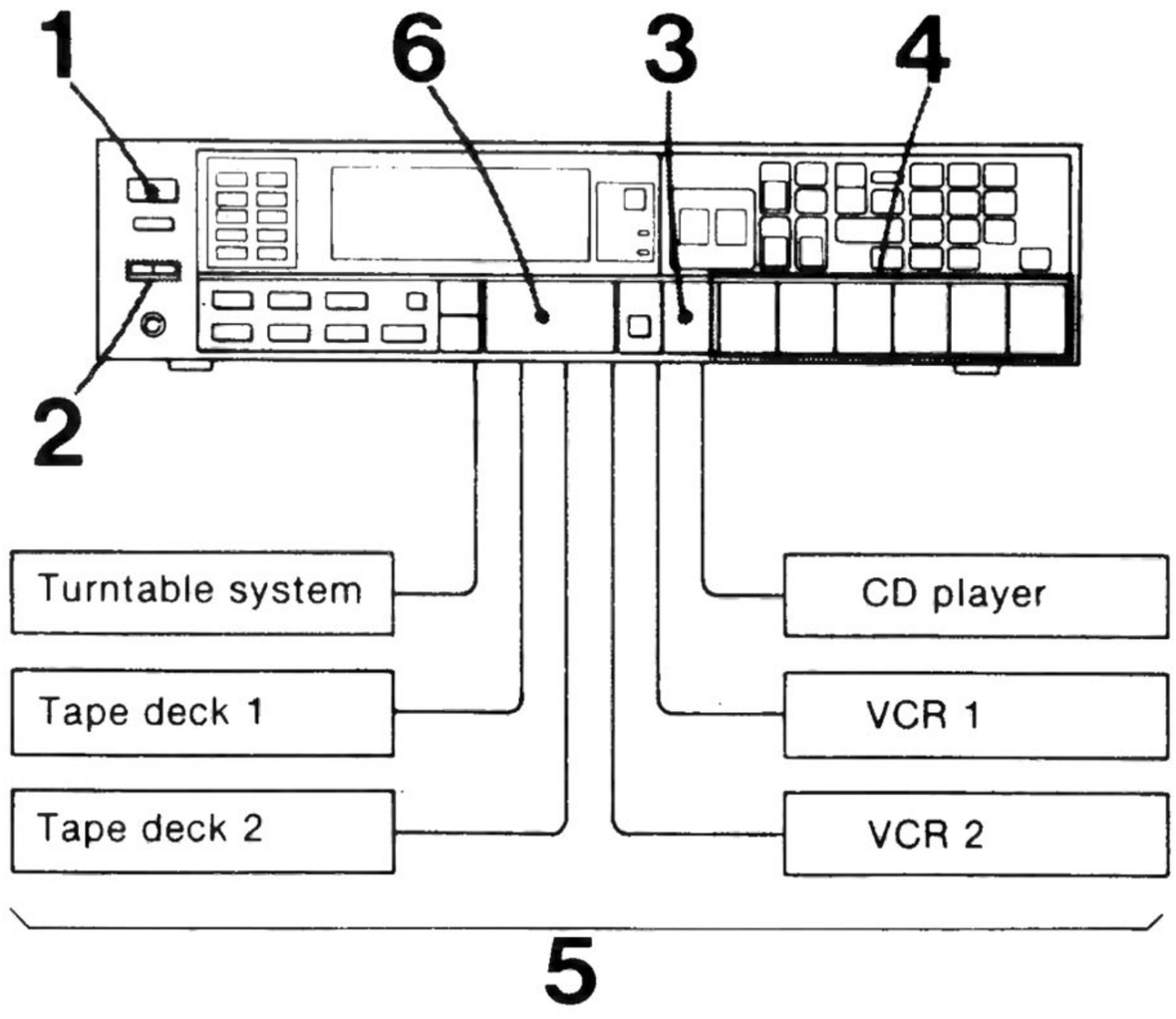

1 Turn on the receiver and connected source equipment.
2 Select the speaker system used with the SPEAKERS selector.
To drive speaker system A: depress A button.
To drive speaker system B: depress B button.
To drive both speaker systems: depress A and B buttons.
For headphone listening only: keep both buttons released.
3 If the indicator on the TAPE 2 (MONITOR) key lights up, press the key to disengage it.
4 Press the appropriate function select key.
The indication of the pressed key will appear.
PHONO: For a record
For the STR-AV760 only, press the CARTRIDGE select key so that the MC (moving-coil type cartridge) or MM (moving-magnet type cartridge) appears in the display window.
CD/AUX: For a CD program or a program from equipment connected to the CD/AUX inputs
VIDEO 1: For a TV program or a program from the VCR connected to the VIDEO 1 inputs
VIDEO 2: For a TV program or a program from the VCR connected to the VIDEO 2 inputs
TAPE 1: For the taped program of a tape deck connected to the TAPE 1 inputs
For the taped program of a tape deck connected to the TAPE 2 inputs, press TAPE 2 (MONITOR) key.
5 Start the program.
6 Adjust the VOLUME control key to your preference.

www.hifiengine.com

RECEIVING FM SIMULCAST TV PROGRAMS

By connecting a component TV, and a VCR or TV tuner, you can receive FM simulcast TV programs (stereo TV sound transmitted from an FM radio station) while viewing the TV program.

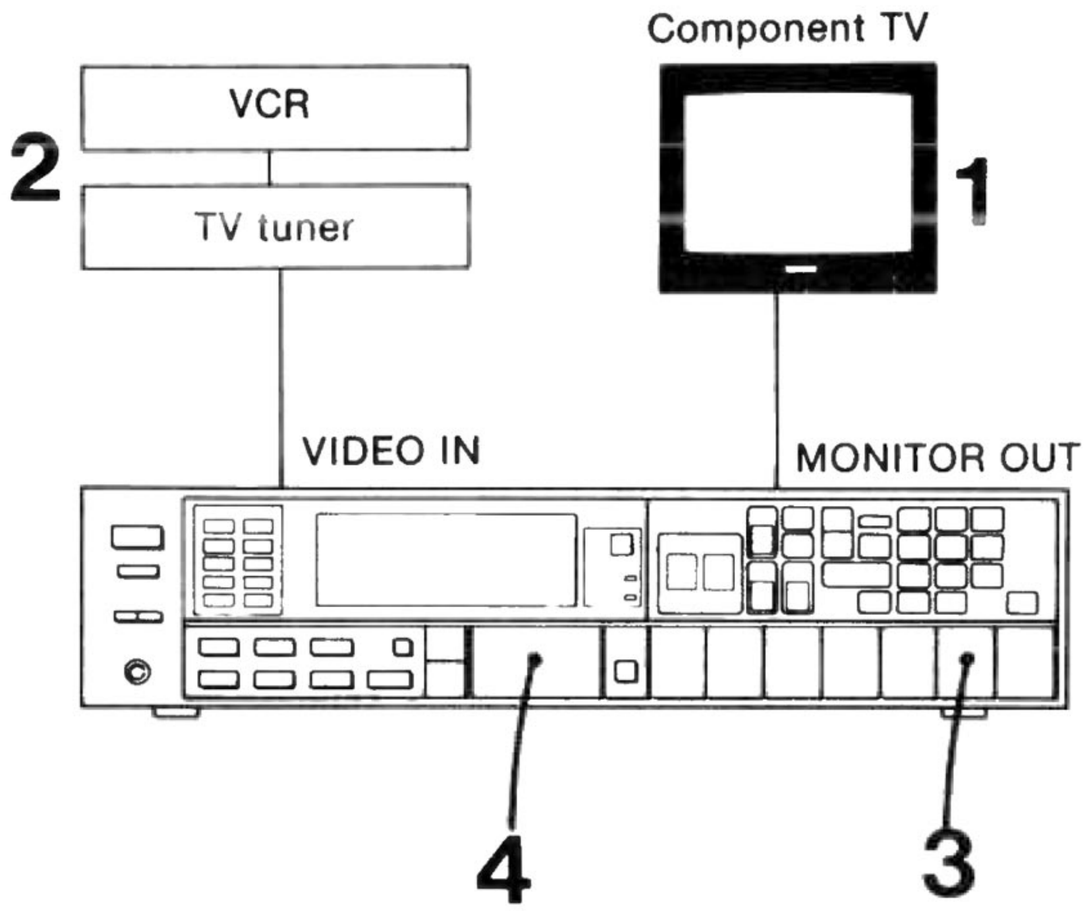

1 Turn on the component TV on.
2 Select the desired TV program with the VCR or the TV tuner.
3 Press the TUNER key of the receiver and tune in the FM simulcast TV program.
4 Adjust the VOLUME control key to your preference.

RECEIVING FM SIMULCAST CABLE TV PROGRAMS

By connecting the CATV cable to this receiver, you can receive FM simulcast cable TV programs without using a signal splitter.
For connection, see "CATV system connection" on Page 10.

1 Turn on the TV and select the desired CATV program with the VCR or TV tuner.
2 Press the FM ANT-A key of the receiver. The CATV indicatior will light up.
3 Tune in the FM simulcast cable TV program on the receiver.
4 Adjust the VOLUME control key to your preference.

TO SET THE ACOUSTIC SETTINGS

This receiver can store and recall three different tone control settings to easily set the tone controls to match three different types of music.

1 Press the ACOUSTIC key to select the acoustic memory number [1], [2] or [3]. With each press of the key, the number displayed in the window increases.
2 Adjust the tonal quality to your preference. The acoustic memory number will disappear.
3 Press the MEMORY key. While the selected acoustic memory number flashes, press the ACOUSTIC key. Now one of the three acoustic settings is committed to memory.

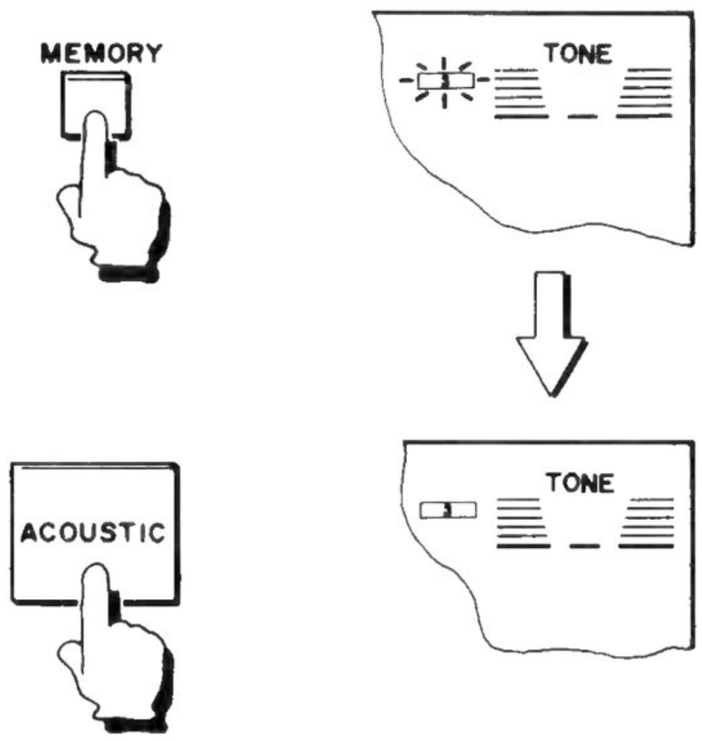

This receiver retains the contents of the memory even when the power is off, and recall them whenever you want.

To check the acoustic setting
Once the setting is set, press the FLAT key. All the acoustic settings are disengaged and a flat frequency response results. Then press the ACOUSTIC key to call up the memorized number, so that the original settings will be recalled. Now compare the effect of the settings with the flat frequency response.

To change temporarily a part of the acoustic settings
Simply change the part of the acoustic setting you want. You can recall the original settings later by pressing the ACOUSTIC key.

To change all the acoustic settings
Simply set the new acoustic settings as you like and memorize them as described before.

www.hifiengine.com

TO RECORD ON AN AUDIO TAPE

RECORDING

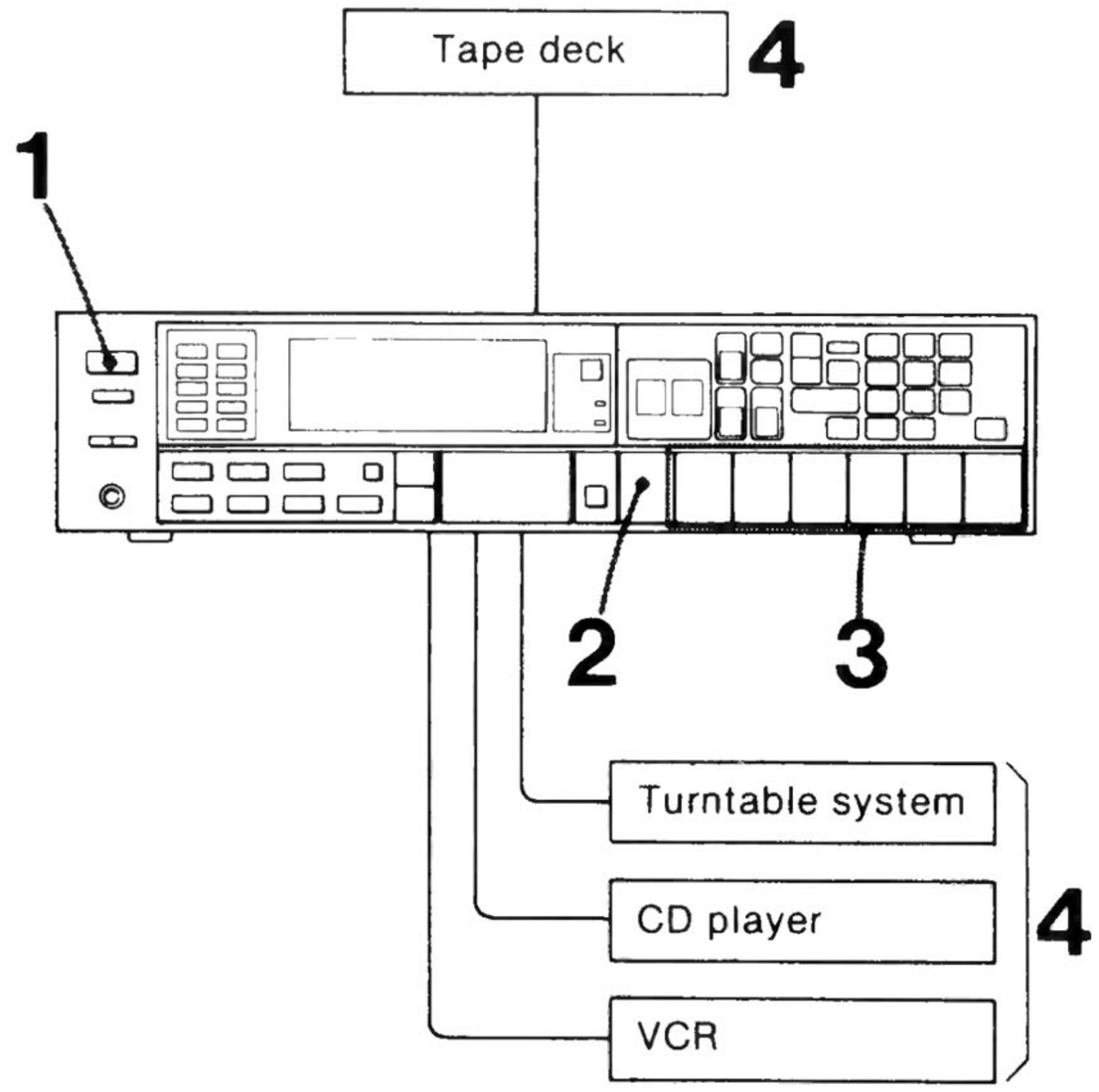

1 Turn on the receiver and connected source equipment.
2 If the indicator on the TAPE 2 (MONITOR) key lights, press this key to disengage it.
3 Select the desired program source with the function select key.
To select the tuner program, press the desired number key if you have already memorized the stations. If not, tune in the desired station.
4 Start the program source and set the tape deck in the recording mode.

The VOLUME, BASS and TREBLE TONE control keys' setting does not have any affect on the recording.

AUDIO TAPE DUBBING

To dub a tape, you need a tape deck in addition to the deck for recording.
Connect the line outputs of the tape deck for playback to the TAPE 1 TAPE inputs and the line inputs of another deck for recording to the TAPE 2 REC OUT jacks.

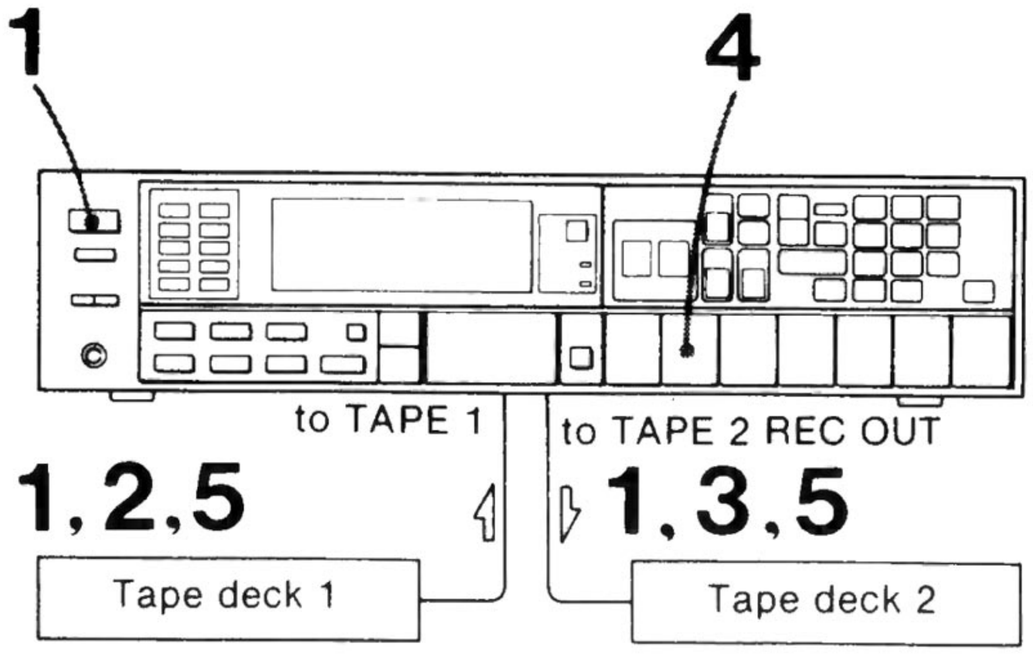

1 Turn on the receiver and the connected tape decks.
2 Insert the recorded tape into tape deck 1 and a blank tape into tape deck 2.
3 Adjust the recording level of tape deck 2.
4 Press the TAPE 1 (TAPE 1 → 2) key.
5 Start playback of tape deck 1 and set the tape deck 2 in the recording mode. Dubbing will begin.

Note: You cannot dub a tape from tape deck 2 to tape deck 1.

Monitoring of a 3-head tape deck
If you have connected a tape deck having separate record and playback heads to the TAPE 2 TAPE inputs, you can monitor the recording results while recording or dubbing. Press the TAPE 2 (MONITOR) key. The MONITOR indicator will light up and the recorded program will be heard. Press the TAPE 2 (MONITOR) key again to listen to the source sound.

HI-FI VIDEO RECORDING

For connection, see the connection diagram on pages 9 and 10. For operation of the hi-fi VCR, refer to its instruction manual.

RECORDING SOUND ON A VIDEO TAPE

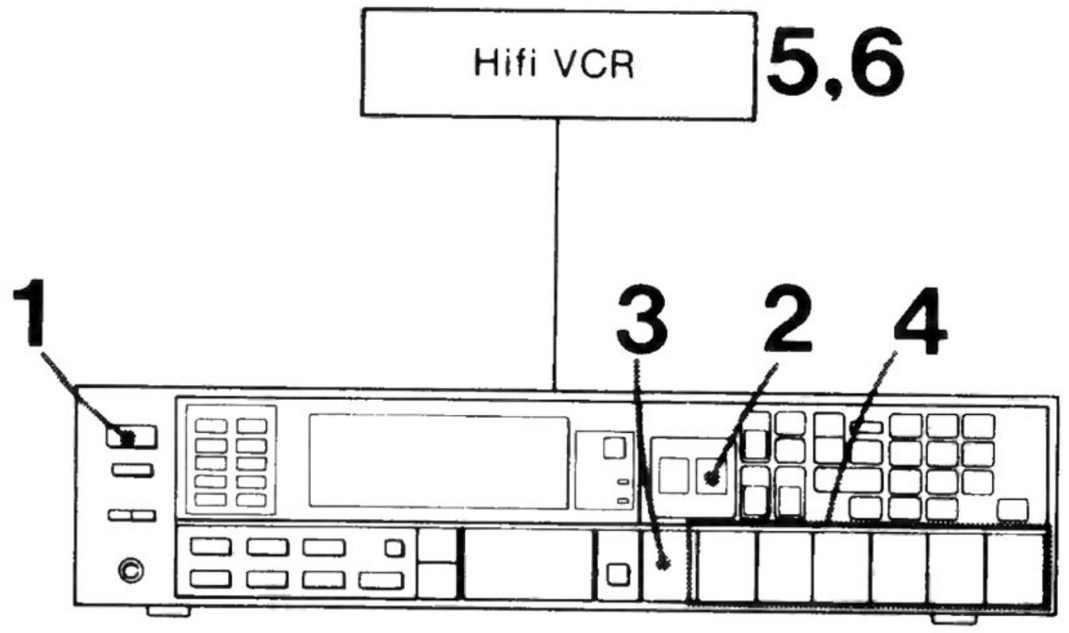

1 Turn on the receiver and the hi-fi VCR.
2 Press the AUDIO key of the receiver. The indication on this key will light up.
3 Be sure that the TAPE 2 (MONITOR) key is disengaged.
4 Select the desired program source with the function select key.
To choose the tuner program source, press the desired number key if you have already memorized the stations. If not, tune in the desired station.
5 Insert a video cassette into the hi-fi VCR and adjust the recording level.
Set the filter switch of the VCR, if it has one, to ON.
6 Start the program and set the VCR in the recording mode.

www.hifiengine.com

The VOLUME, BASS and TREBLE TONE control keys' setting does not have any affect on the recording.

Note: you cannot record on a VCR connected to VIDEO 2 jacks.

VIDEO TAPE EDITING

To edit a video tape, you need to connect another VCR for playback to the VIDEO 2 inputs.

Operation

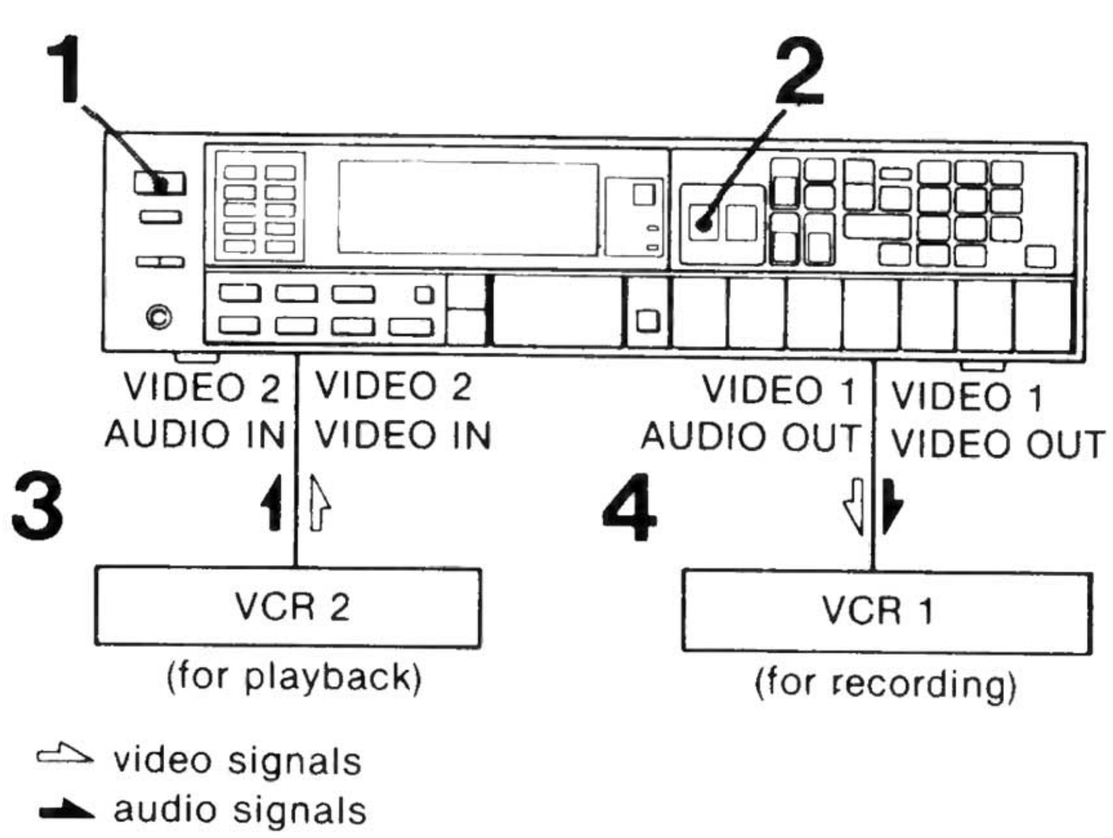

1 Turn on the receiver and the connected equipment.
2 Press the VIDEO key of the receiver. The indicator on this key will light up.
3 Set the VCR 2 in playback mode.
4 Set the VCR 1 in recording mode. Editing will begin.

You can listen to an audio program source while editing a video tape, by pressing any function select key.

Note: You cannot edit a video tape from VCR 1 to VCR 2.

ADDING SOUND ON A VIDEO TAPE WHILE EDITING

During video tape editing, you can add an audio program source, thus making your own personalized video tape. The new sound will be recorded and the previous sound will be erased.

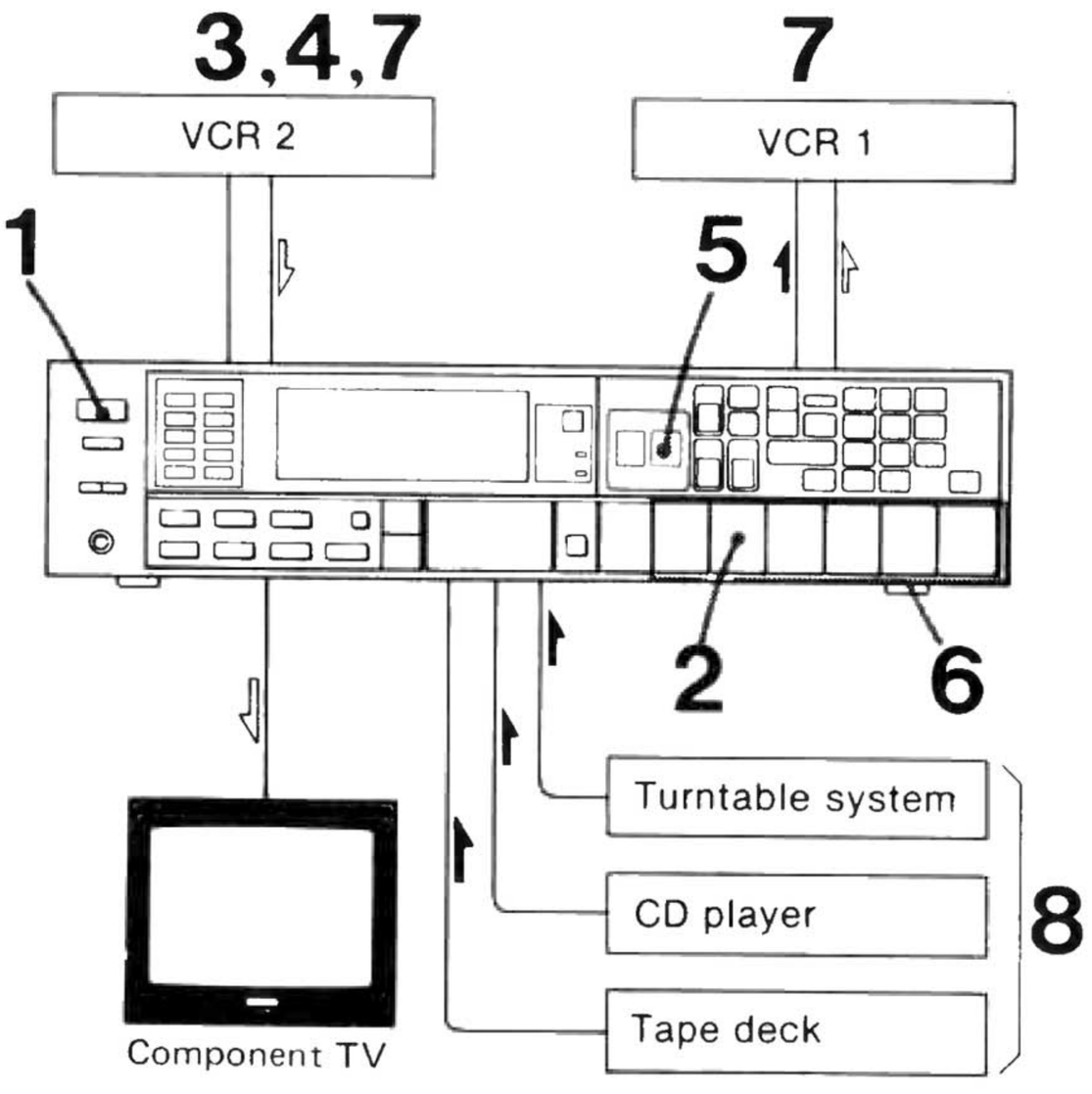

1 Turn on the receiver and the connected equipment.
2 Press the VIDEO 2 key.
3 Insert a recorded video tape into the VCR 2 and set it in playback mode.
4 At the point where audio dubbing is to start, press the ▮▮ PAUSE button on the VCR 2.
5 Press AUDIO key on the receiver. The indication on this key will light up.
6 Press the desired function select key.
7 Release the pause mode of the VCR 2 and set the VCR 1 in recording mode.
8 Start playing the selected program source.

www.hifiengine.com

SECTION 1
BLOCK DIAGRAM

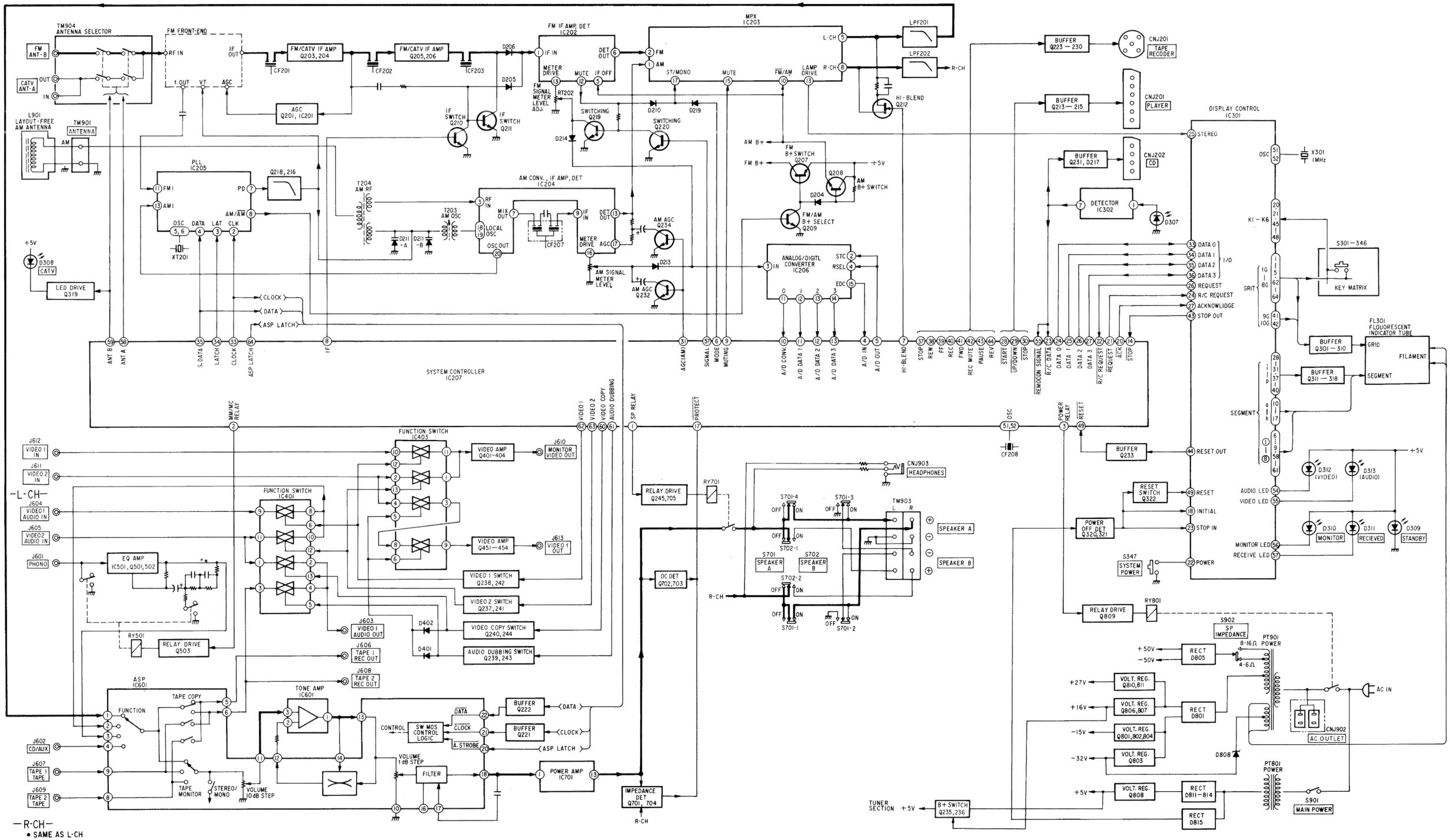

SECTION 2
DISASSEMBLY

Note: Follow the disassembly procedure in the numerical order given.

CASE

Remove the four screws.

FRONT PANEL

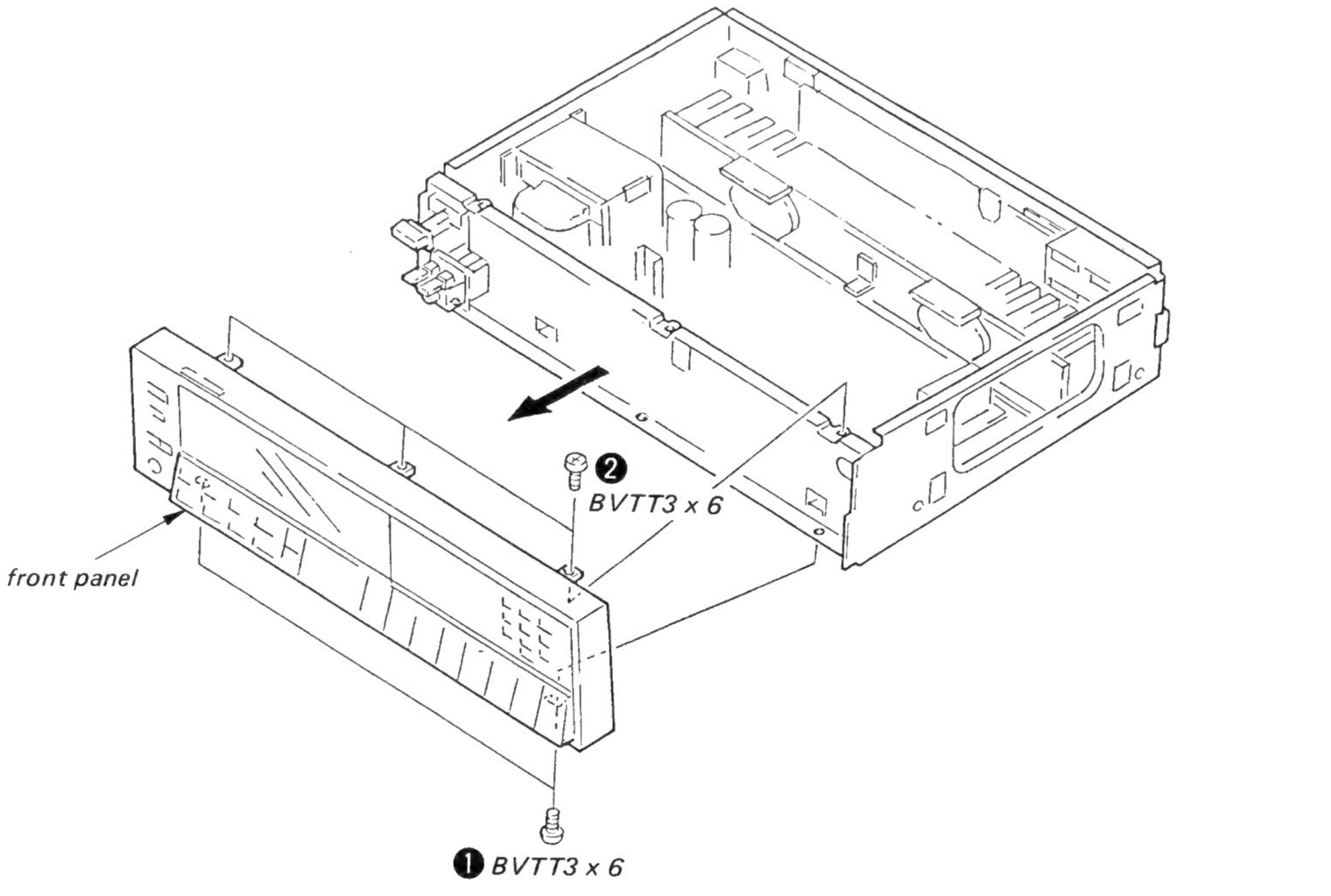

DISPLAY BOARD, TONE BOARD AND SYSTEM POWER BOARD

❶ , ❷ : *system power board*
❸ – ❺ : *display board*
❸ – ❼ : *tone board*

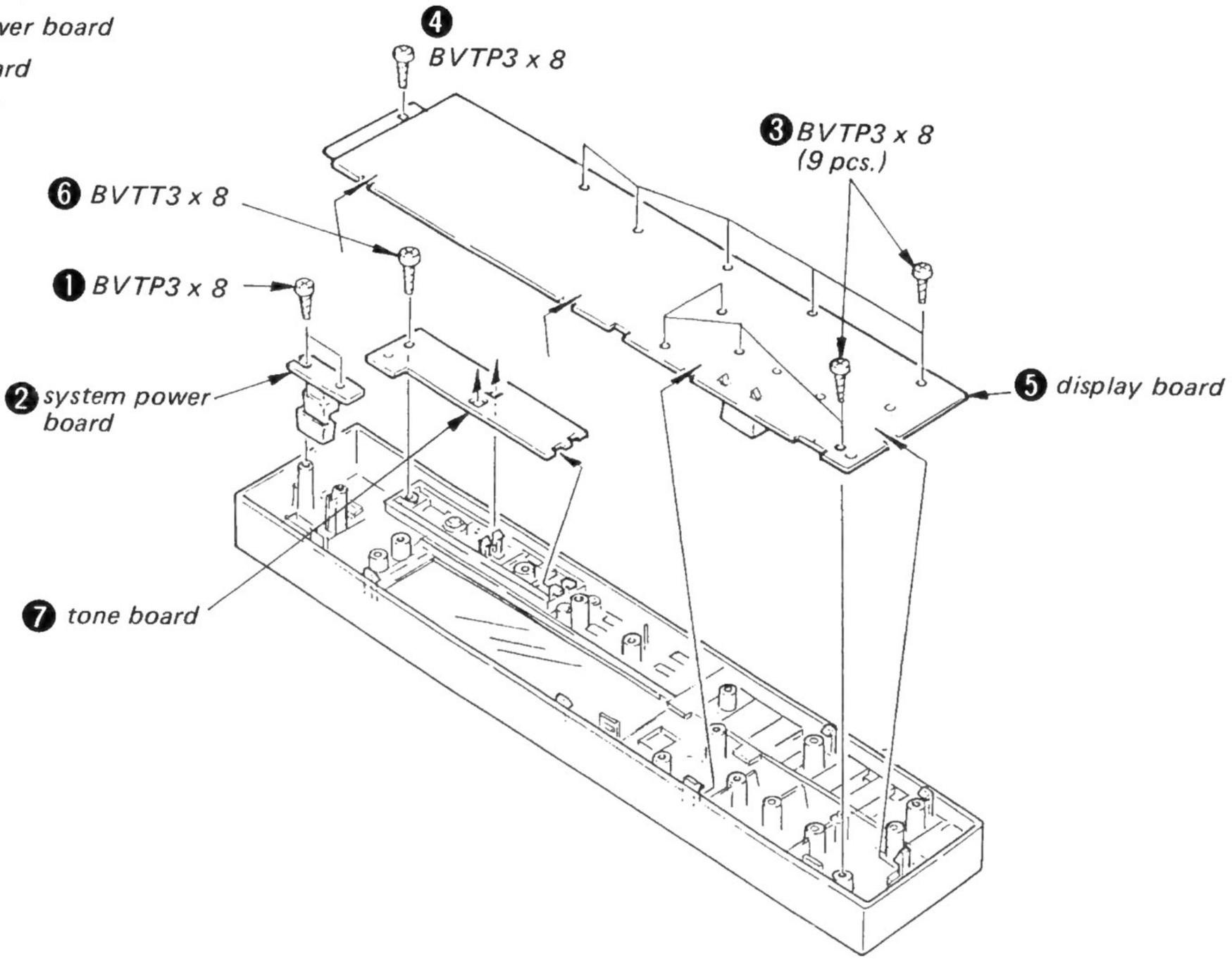

www.hifiengine.com

INPUT BOARD

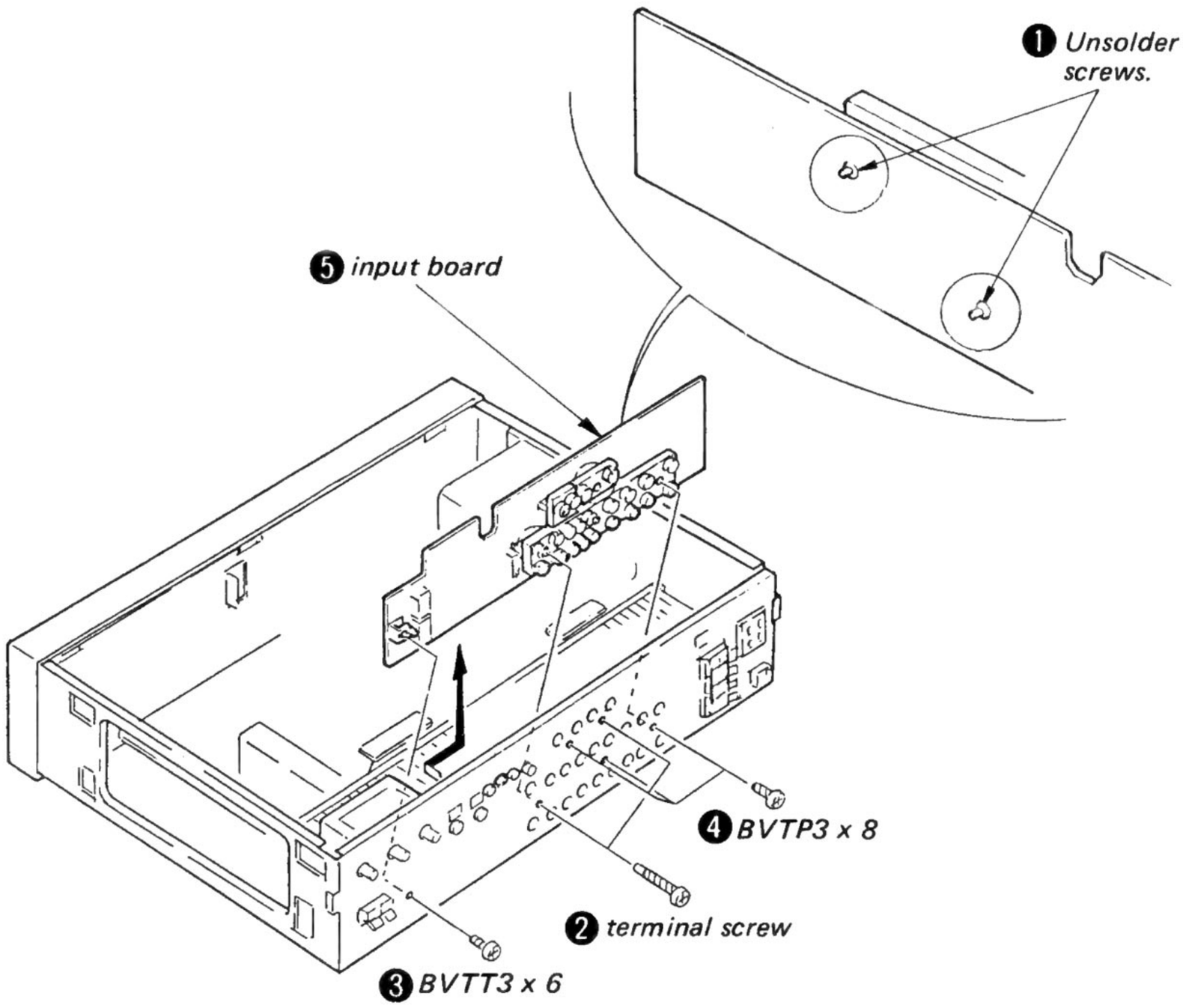

www.hifiengine.com

SECTION 3
ELECTRICAL ADJUSTMENTS

AM SECTION

Setting:

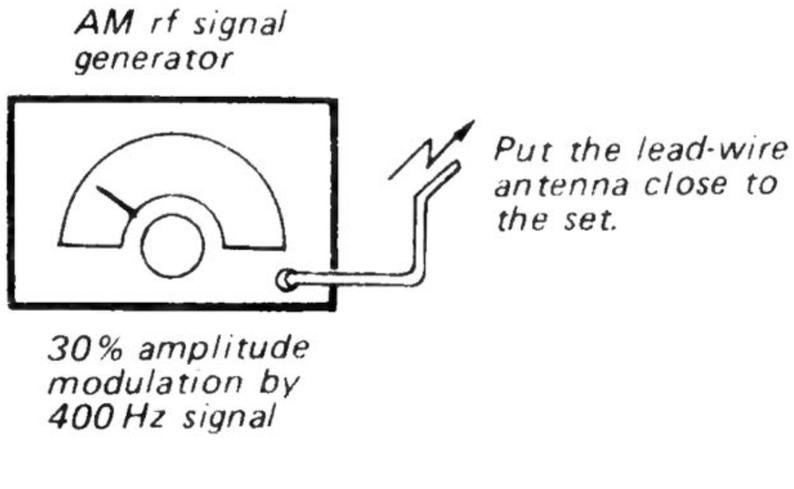

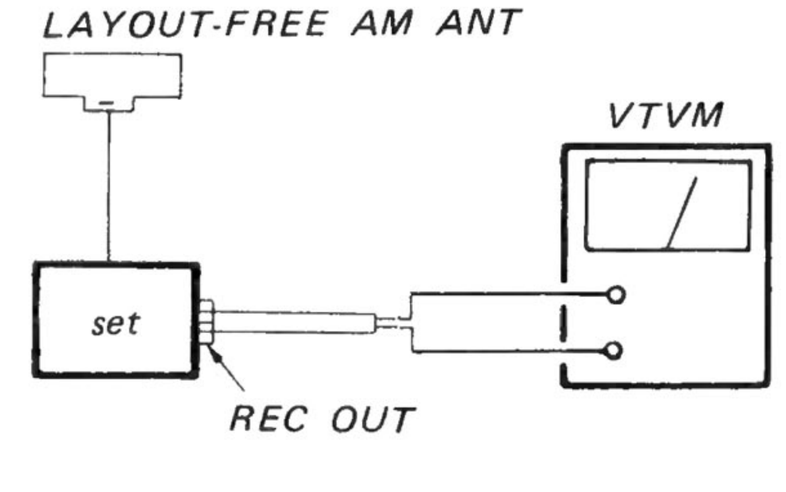

- Repeat the procedures in each adjustment several times, and the frequency coverage and tracking adjustments should be finally done by the trimmer capacitors.

AM IF Alignment

SG and set frequency	Adjustment part	Reading on VTVM
450 kHz	T205	maximum

AM Tracking Adjustment

This adjustment should be performed after making AM Frequency Coverage Adjustment.

SG and set frequency	Adjustment part	Reading on VTVM
600 kHz	T204	maximum
1,400 kHz	CT201	

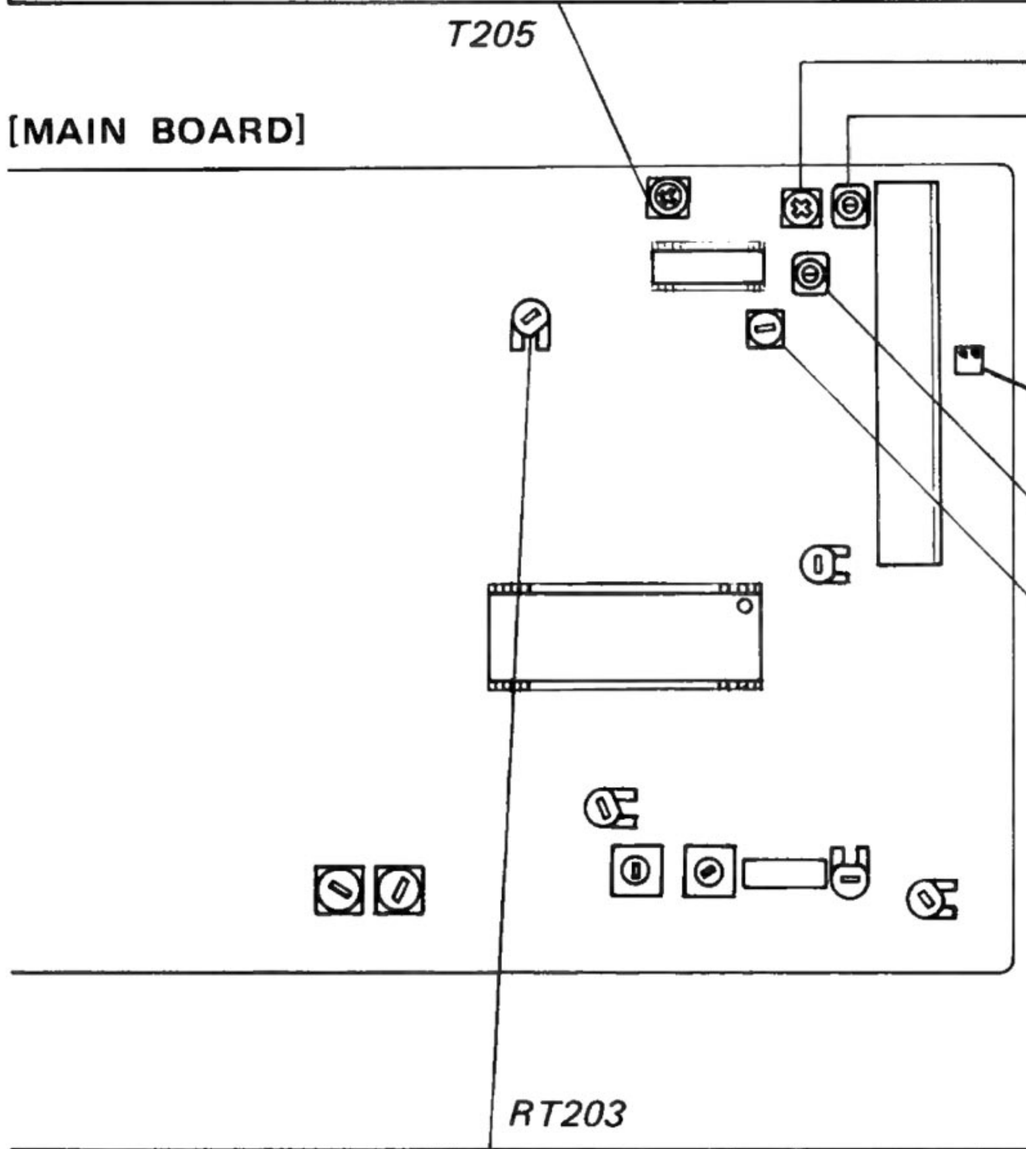

AM Frequency Coverage Adjustment

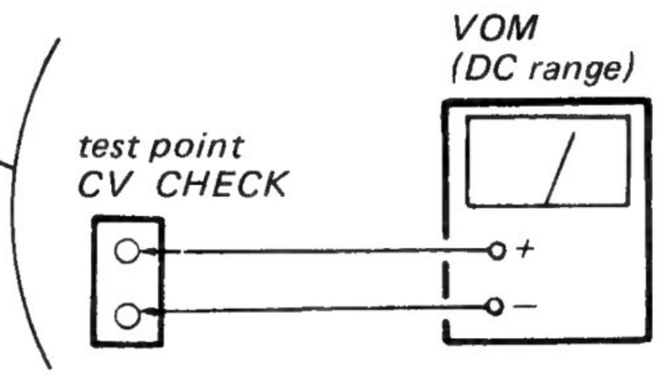

Set frequency	Adjustment part	Reading on VOM
530 kHz	T203	1.8 V ±0.2 V
1,610 kHz	CT202	22 ±0.2 V

AM Signal Meter Adjustment

Procedure:

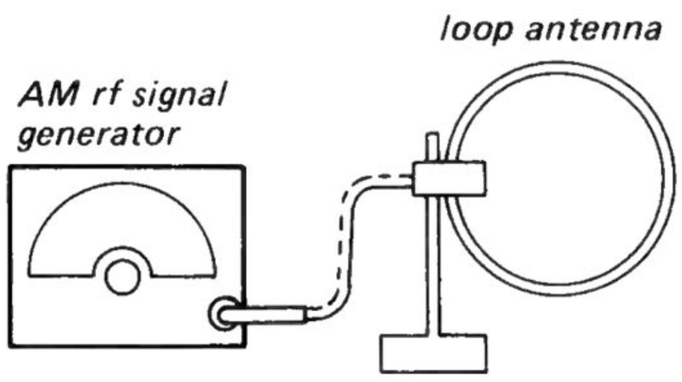

Carrier frequency: 1000 kHz
Modulation: 400 Hz, 30% modulation
Ferrie-rod ANT input: 116 dB/m

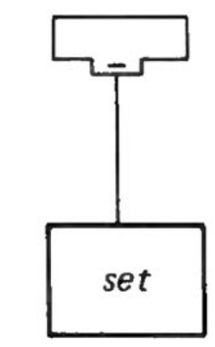

1. Press METER SELECT switch to indicate signal strength.
2. Adjust RT203 so that the signal meter indicates 90 dB.

www.hifiengine.com

FM SECTION

The FM front-end is carefully adjusted at the factory and is supplied as one whole block for replacement.

[MAIN BOARD]

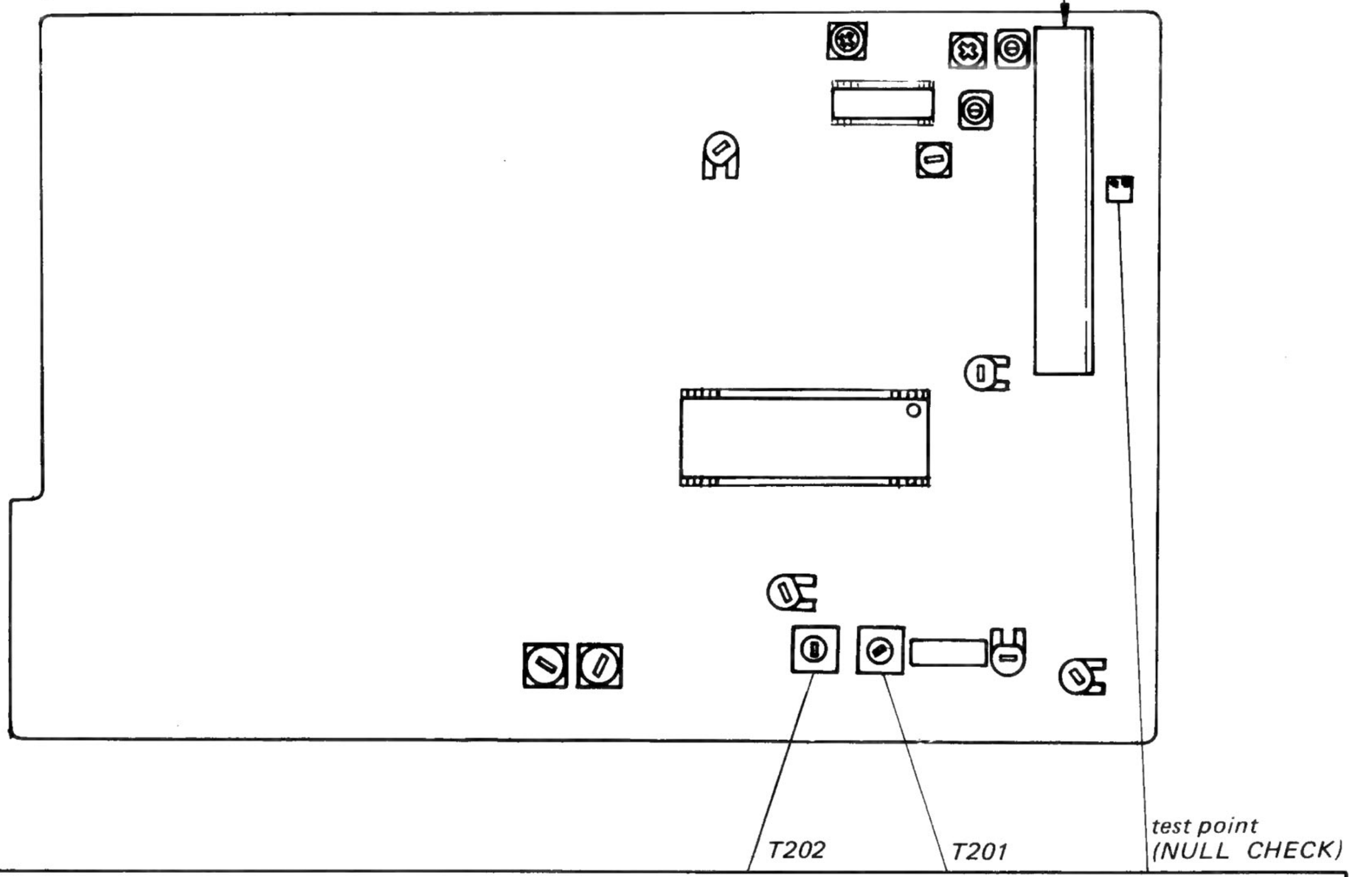

FM Discriminator Alignment (NULL and MONO Distortion)

Setting:

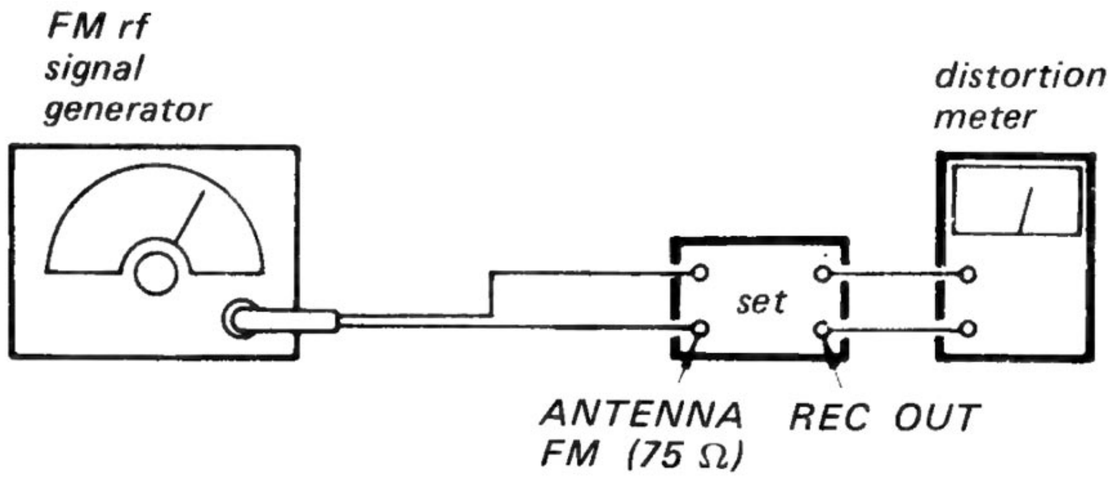

Carrier frequency: *98 MHz*
Modulation: *1 kHz, 75 kHz deviation (100%)*
Output level: *1 mV (60 dB)*

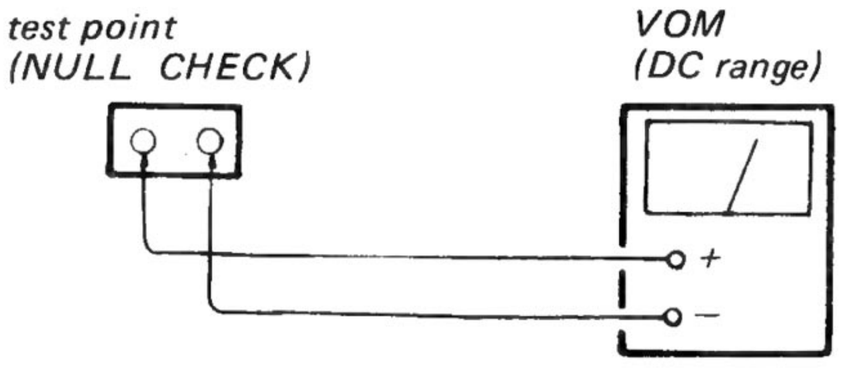

Procedure:

1. Tune the set to 98 MHz.
2. Adjust T201 (primary-side) for 0 V reading on the VOM. . . . . NULL
3. Adjust T202 (secondary-side) for a minimum reading on the distortion meter.
   . . . . . MONO Distortion
4. Repeat the primary-side and secondary-side alignments several times.

Note: When replacing the ceramic filter, perform this alignment.

www.hifiengine.com

[MAIN BOARD]

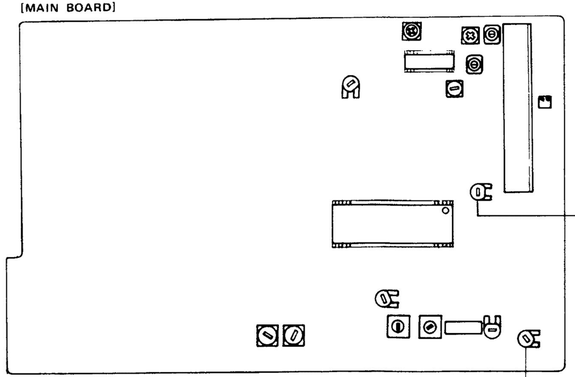

RT201

RT202

FM Signal Meter Level Adjustment

Setting: FM

Procedure:

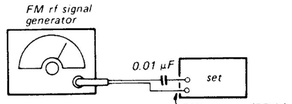

Carrier frequency: 98 MHz
Modulation: 1 kHz, 75 kHz deviation (100%)
Output level: 3.5 mV (70 dB)
Mode: Mono

1. Press METER SELECT switch to indicate signal strength.
2. Adjust RT202 so that the signal meter indicates 70 dB.

FM AGC Adjustment

Setting: FM MONO

Procedure:

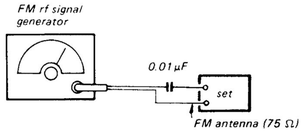

Carrier frequency: 98 MHz
Modulation: 1 kHz, 75 kHz deviation (100%)
Output level: 10 mV (80 dB)
Mode: Mono

1. Connect VOM to the pattern between R201 and IC201 pin (7) on main board.
2. Adjust RT201 so that the reading on VOM is 10 V.

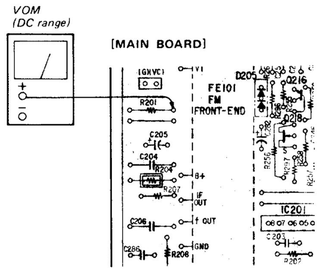

FM Stereo Separation Adjustment

Setting:

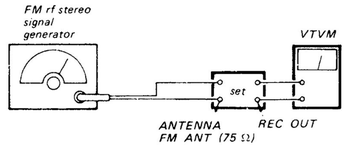

Carrier frequency: 98 MHz
Output level: 1 mV (60 dB)
Modulation:
Audio 1 kHz: 33.75 kHz deviation (45%)
Sub channel 38 kHz: 33.75 kHz deviation (45%)
Pilot signal 19 kHz: 7.5 kHz deviation (10%)
Mode: stereo

Procedure:

Tune the set to 98 MHz.

FM stereo signal generator output channel	VTVM connection	VTVM reading (dB)
L-CH	L-CH	Ⓐ
R-CH	L-CH	Ⓑ Adjust RT204 for minimum reading.
R-CH	R-CH	Ⓒ
L-CH	R-CH	Ⓓ Adjust RT204 for minimum reading.

L-CH Stereo separation: Ⓐ - Ⓑ
R-CH Stereo separation: Ⓒ - Ⓡ

The separations of both channels should be equal.

RT204

[MAIN BOARD]

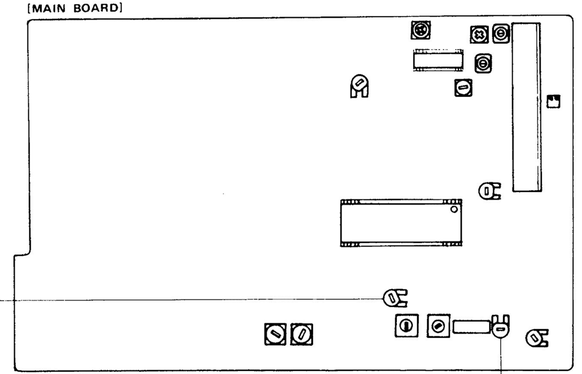

RT205

FM Stereo Operation Adjustment

Setting: FM STEREO

Procedure:

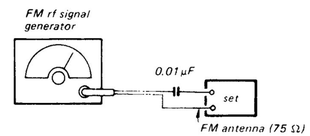

Carrier frequency: 98 MHz
Output level: 10 μV (20 dB)
Mode: Stereo

1. Set FM rf stereo signal generator output to 20 dB (10 μV).
2. Adjust RT205 so that the stereo indicator just lights up.

• Semiconductor Lead Layouts

2SA733
2SC1362

2SC2785

CX789

2SA1049
2SC2603-F
2SC2724-C
DTA124XS
DTC124XS
DTC143TS

2SD1310

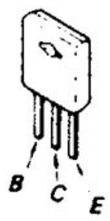

CX20106
M5218L
M5219L

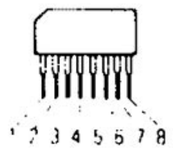

2SB731
2SD809

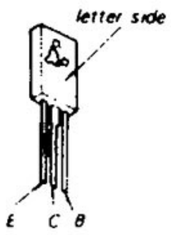

2SK30A-Y

CX7925B

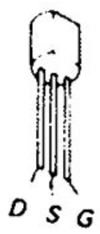

2SK170

HD614042SB01
HD614042SB02
M5209P

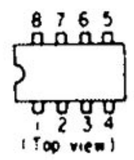

2SB734-3

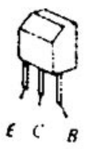

2SK381-E

LA1235

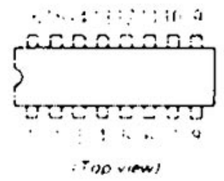

LA1245

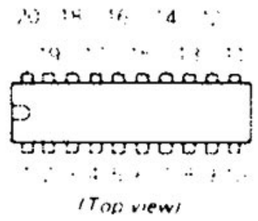

LA3400

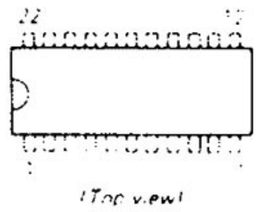

LC4966

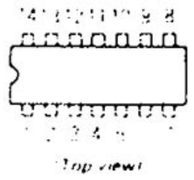

STK4038XI
STK4042XI

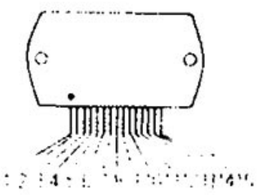

TC5090AP

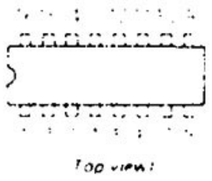

10E2
1S1555
1S953-7
RD3.9EL1
RD5.6EL3
HZ16-2L
HZ27-2L
HZ33-1L
HZ6C3L
HZ7B2L

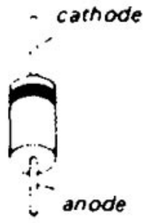

30DC1

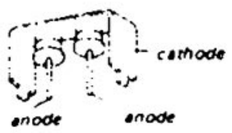

30DC1R

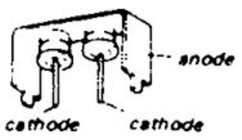

GL5HD21
GL5HD5

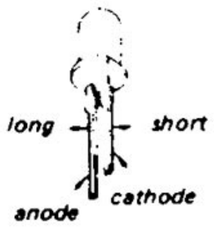

GL5EG521-A

KV1226-F

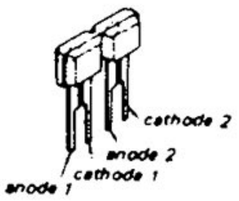

MC921

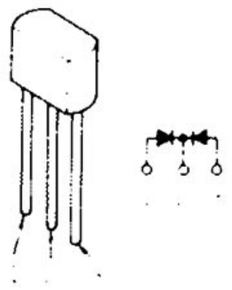

MC931

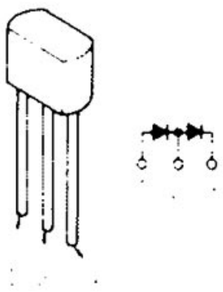

PC817

PH302B

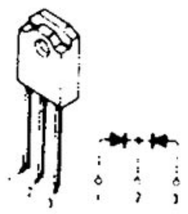

S1VB20

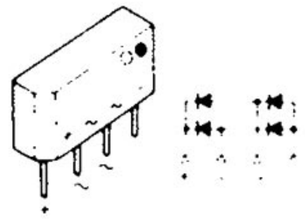

TLG255

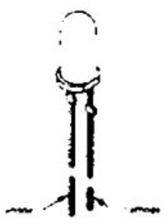

TLY255

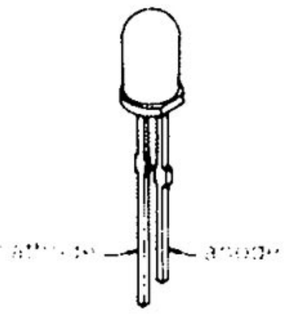

CIRCUIT BOARD LOCATION

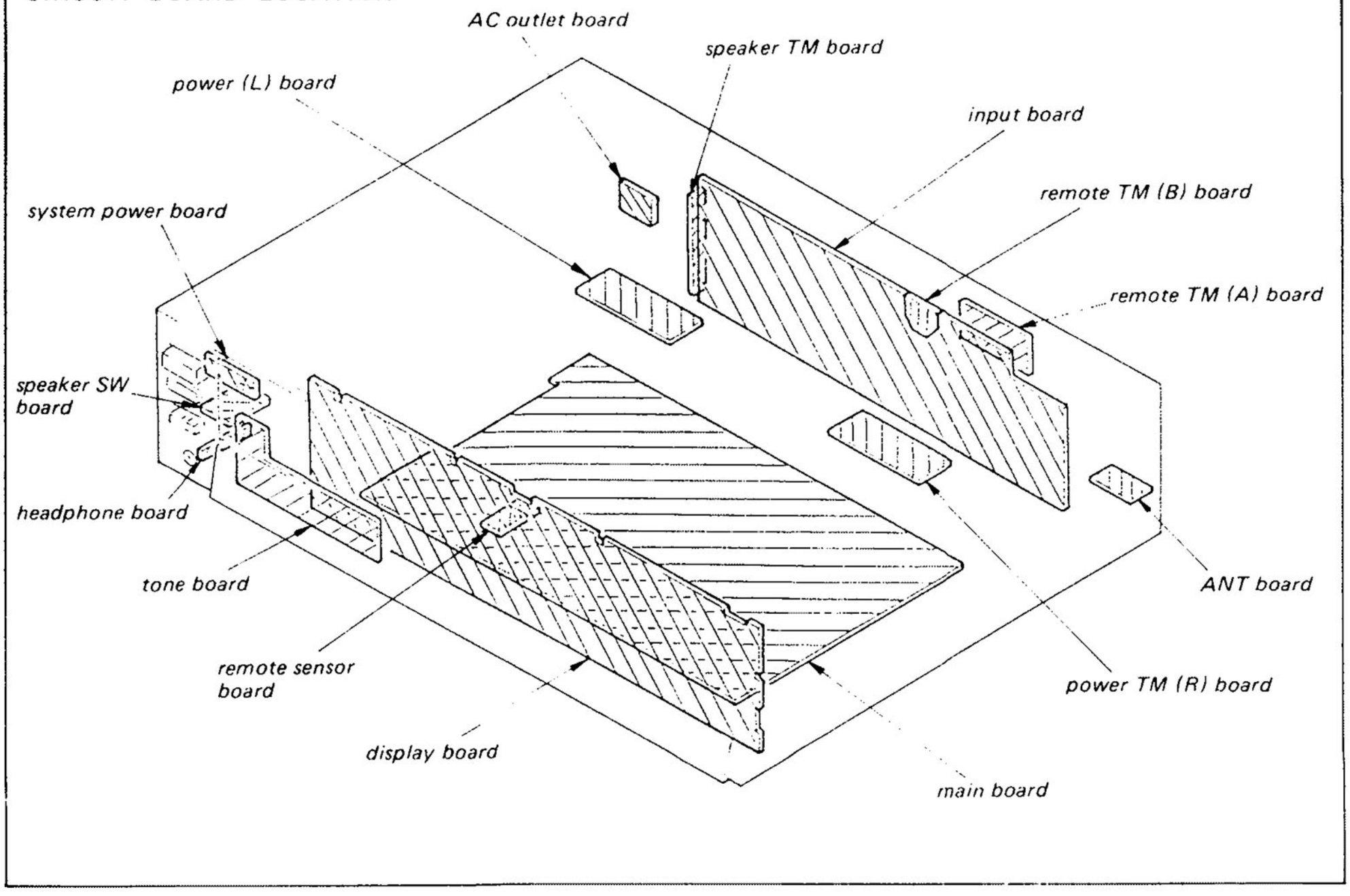

www.hifiengine.com

SECTION 4
DIAGRAMS

4-1. MOUNTING DIAGRAM
– Conductor Side –

● See page 26 for Semiconductor Lead Layouts.

Note:

- Color code of sleeving over the end of the jacket.

- ○—: parts extracted from the component side.
- ●—: parts extracted from the conductor side.
- ■ : part mounted on the conductor side.
- ●——●: signal path
- ●——●: L-CH signal path
- ●——●: R-CH signal path
- ●: B + pattern

Note on Ceramic Filter (CF201- 203) Replacement and Solder Jumper Connection.

FM IF circuit employs three ranks of ceramic filter (CF201—203) which have different center frequency. CF201, 202 and 203 should be used the ceramic filters of same rank. The solder jumper connection will be different depending on the rank of ceramic filter. (The solder jumper connection is necessary to match the center frequency of the ceramic filter used with FM intermediate frequency.)

Rank of ceramic filter (MHz)	Solder jumper connection		FM intermediate frequency (MHz)
	*A (IF(+))	*B (50k)	
White (10.75)	○	○	10.75
Red (10.7)	X	X	10.7
Black (10.65)	X	○	10.65

connected: ○
not connected: X

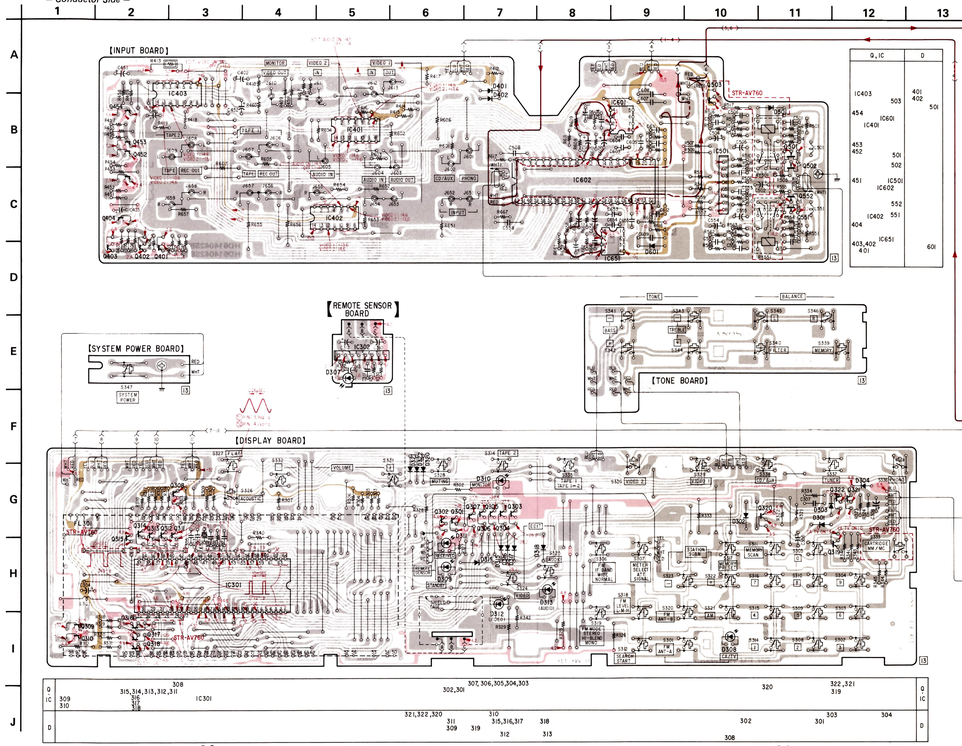

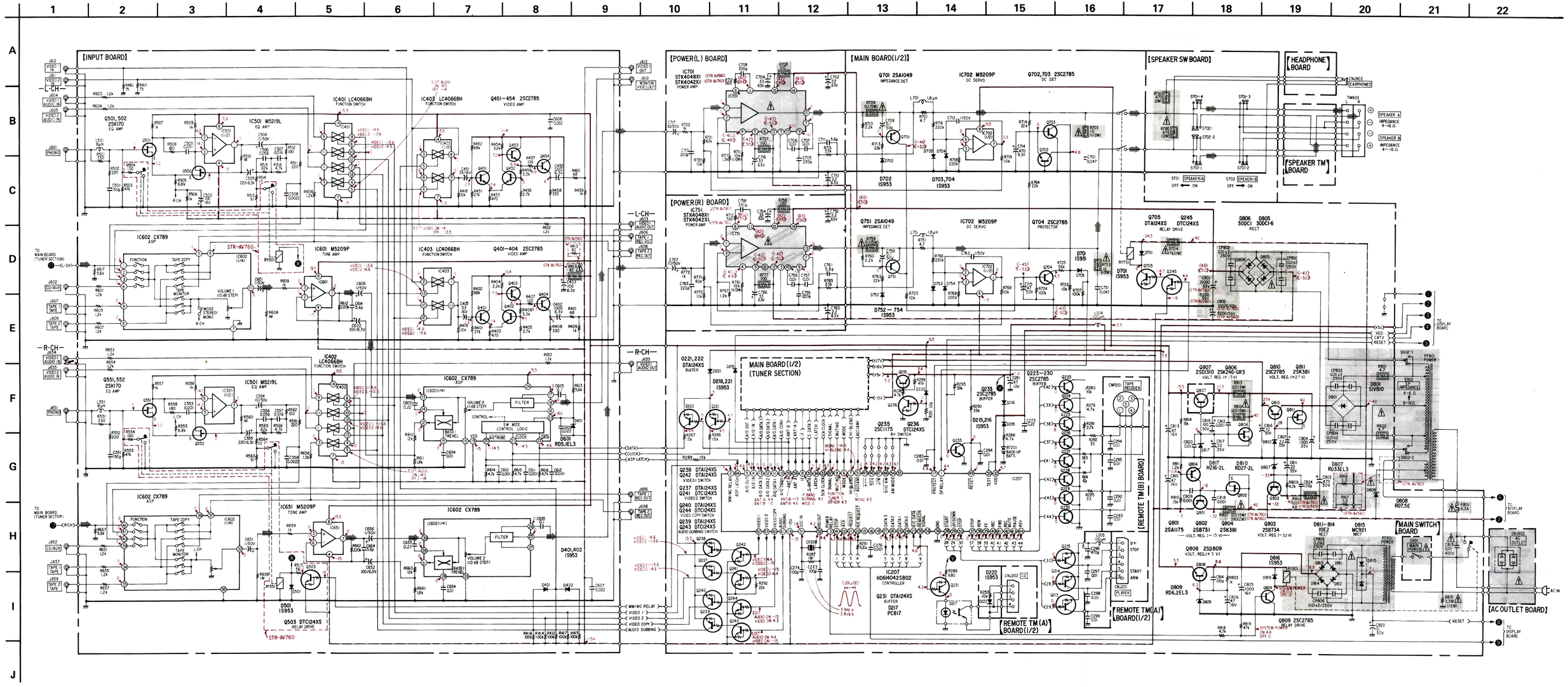
[INPUT BOARD]
[POWER(L) BOARD]
[POWER(R) BOARD]
[MAIN BOARD(I/2)]
[SPEAKER SW BOARD]
[HEADPHONE BOARD]
[SPEAKER TM BOARD]
[REMOTE TM(B) BOARD]
[REMOTE TM(A) BOARD(I/2)]
[MAIN SWITCH BOARD]
[AC OUTLET BOARD]
MAIN BOARD(I/2) (TUNER SECTION)
IC501 M5219L EQ AMP
IC601 M5209T TONE AMP
IC602 CX789 ASP
IC651 M5209P TONE AMP
IC701 M5209T DC SERVO
IC702 M5209P DC SERVO
IC207 HD64042SB02 CONTROLLER
Q401–404 2SC2785 VIDEO AMP
Q451–454 2SC2785 VIDEO AMP
Q701 2SA1049 IMPEDANCE DET
Q751 2SA1049 IMPEDANCE DET
Q702,703 2SC2785 DC DET
Q704 2SC2785 PROTECTOR
Q705 DTAI24XS RELAY DRIVE
Q245 DTC124XS RELAY DRIVE
Q809 2SC2785 RELAY DRIVE
Q503 DTC124XS RELAY DRIVE
Q231 DTAI24XS BUFFER
Q233 2SC2785 BUFFER
Q235 2SC1175 B+ SWITCH
Q236 DTC124XS B+ SWITCH
Q807 2SD310 VOLT. REG. (+15V)
Q806 2SK246-GR3 VOLT. REG. (+15V)
Q810 2SC2785 VOLT. REG. (+27 V)
Q811 2SK38I VOLT. REG. (+27 V)
Q801 2SA1175 VOLT. REG. (–15 V)
Q802 2SB731 VOLT. REG. (–15 V)
Q804 2SK38I VOLT. REG. (–32 V)
Q803 2SB734 VOLT. REG. (–32 V)
Q808 2SD809 VOLT. REG. (+5 V)
D702 IS953
D703,704 IS953
D752–754 IS953
D701 IS953
D701 IS95
D801 SVB10
D808 RD7.5E
D809 RD6.2EL3
D807 RD33EL3
D811–814 IOE2 REC
D815 MC921 RECT
D816 IS953
D817 HZ16-2L
D810 RD27-2L
D805 30DCI-6 RECT
D806 30DCI RECT
D221 DTAI24XS BUFFER
D218,221 IS953
D215,216 IS953
D401,402 IS953
D501 IS953
D222 IS953
D231 DTAI24XS BUFFER
D217 PC817
D701 IS95
D751 IS95
D753 IS953
D754 IS953
D752–754 IS953
D601 RD5JEL3
D603 RD5JEL3
D604 RD5JEL3
D605 RD5JEL3
D606 RD5JEL3
D607 RD5JEL3
D608 RD5JEL3
D609 RD5JEL3
D610 RD5JEL3
D611 RD5JEL3
D612 RD5JEL3
D613 RD5JEL3
D614 RD5JEL3
D615 RD5JEL3
D616 RD5JEL3
D617 RD5JEL3
D618 RD5JEL3
D619 RD5JEL3
D620 RD5JEL3
D621 RD5JEL3
D622 RD5JEL3

4-3. SCHEMATIC DIAGRAM – Display Section –

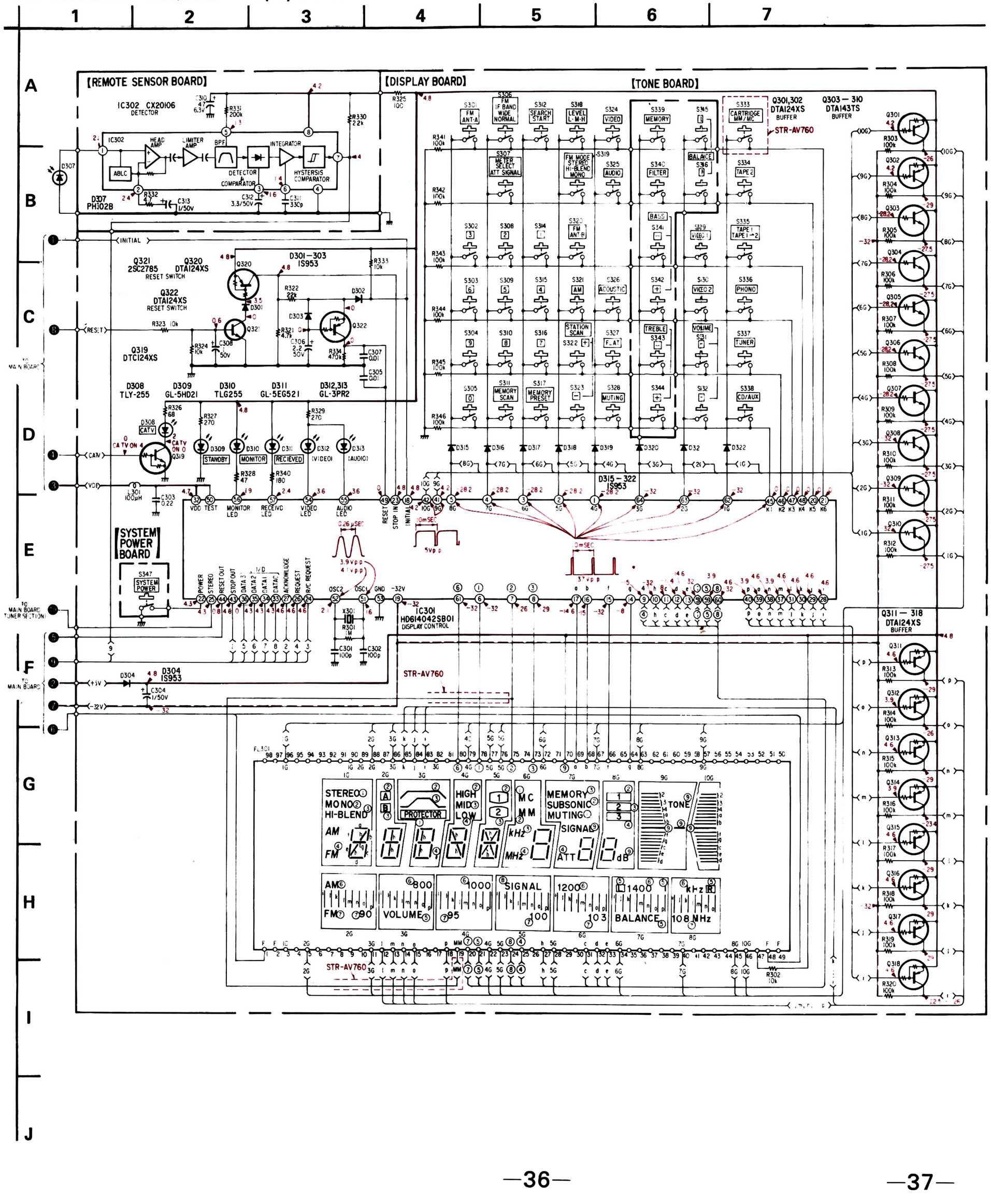

Note:

- All capacitors are in μF unless otherwise noted. pF: μμF 50WV or less are not indicated except for electrolytics and tantalums.
- All resistors are in Ω and ¼W or less unless otherwise specified.
- ⇨ : signal path.
- ▭ : nonflammable resistor.
- ▬ : B+ bus.
- ▬ : B– bus.
- ▭ : adjustment for repair.
- Voltages are dc with respect to ground unless otherwise noted.
- Reading are taken under no-signal (detuned) conditions with a VOM (50 kΩ/V).
  no mark : common.
  [ ] : edit audio or edit video on mode.
  < > : impedance 4 – 8 Ω mode.
  ≺ ≻ : impedance 8 – 16 Ω mode.
- Voltage variations may be noted due to normal production tolerances
- Waveforms are taken to ground in no-signal mode by using oscilloscope.
  Voltage variations may be noted due to normal production tolerances.

Note: The components identified by shading and mark ⚠ are critical for safety. Replace only with part number specified.

- Switch

Ref. No.	Switch	Position
S301	FM ANT-A	OFF
S302–305 S308–310 S314–316	PRESET 0–9	OFF
S306	FM IF BAND	OFF
S307	METER SELECT	OFF
S311	MEMORY SCAN	OFF
S312	SEARCH START	OFF
S317	MEMORY PRESET	OFF
S318	FM LEVEL	OFF
S319	FM MODE	OFF
S320	FM ANT-B	OFF
S321	AM	OFF
S322	STATION SCAN/+	OFF
S323	STATION SCAN/–	OFF
S324	VIDEO	OFF
S325	AUDIO	OFF
S326	ACOUSTIC	OFF
S327	FLAT	OFF
S328	MUTING	OFF
S329	VIDEO 1	OFF
S330	VIDEO 2	OFF
S331	VOLUME/+	OFF
S332	VOLUME/–	OFF
S333	CARTRIDGE (STR-AV760)	OFF
S334	TAPE 2	OFF
S335	TAPE 1	OFF
S336	PHONO	OFF
S337	TUNER	OFF
S338	CD/AUX	OFF
S339	MEMORY	OFF
S340	FILTER	OFF
S341	BASS/–	OFF
S342	BASS/+	OFF
S343	TREBLE/–	OFF
S344	TREBLE/+	OFF
S345	BALANCE/L	OFF
S346	BALANCE/R	OFF
S347	SYSTEM CONTROL	OFF
S701	SPEAKER A/B	A
S901	MAIN POWER	OFF
S902	SP IMPEDANCE	8–16Ω

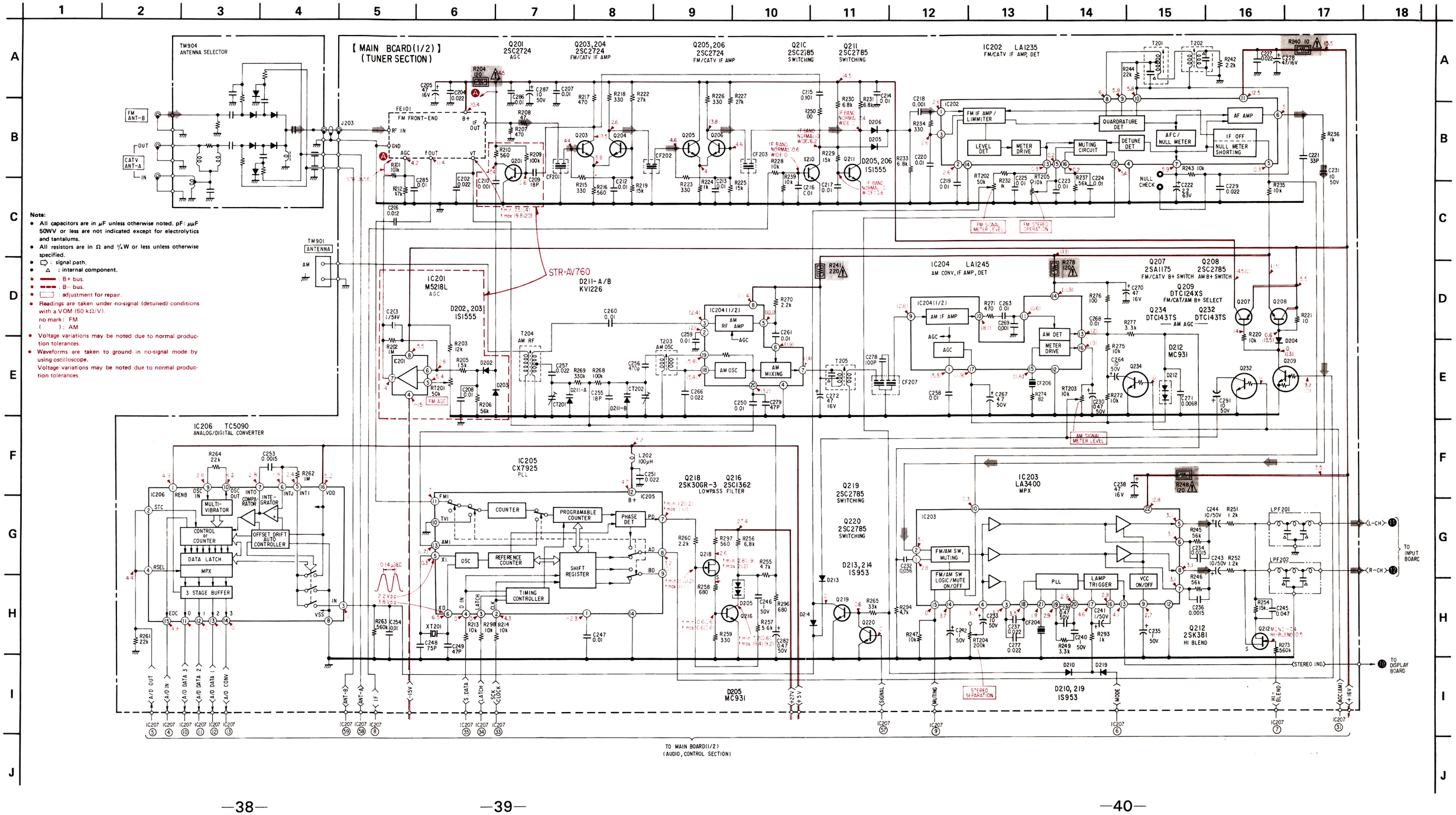

Note:

- All capacitors are in μF unless otherwise noted. pF: μμF
  50WV or less are not indicated except for electrolytics and tantalums.
- All resistors are in Ω and ¼W or less unless otherwise specified.
- ⇨ : signal path.
- △ : internal component.
- ▬▬ : B+ bus.
- ▬ ▬ : B− bus.
- ▭ : adjustment for repair.
- Readings are taken under no-signal (detuned) conditions with a VOM (50 kΩ/V).
  no mark : FM
  ( ) : AM
- Voltage variations may be noted due to normal production tolerances.
- Waveforms are taken to ground in no-signal mode by using oscilloscope.
  Voltage variations may be noted due to normal production tolerances.

SECTION 5
EXPLODED VIEWS AND PARTS LIST

NOTE:

- The mechanical parts with no reference number in the exploded views are not supplied.
- Items marked " ★ " are not stocked since they are seldom required for routine service. Some delay should be anticipated when ordering these items.
- The construction parts of an assembled part are indicated with a collation number in the remark column.

The components identified by shading and mark ⚠ are critical for safety. Replace only with part number specified.

(1)

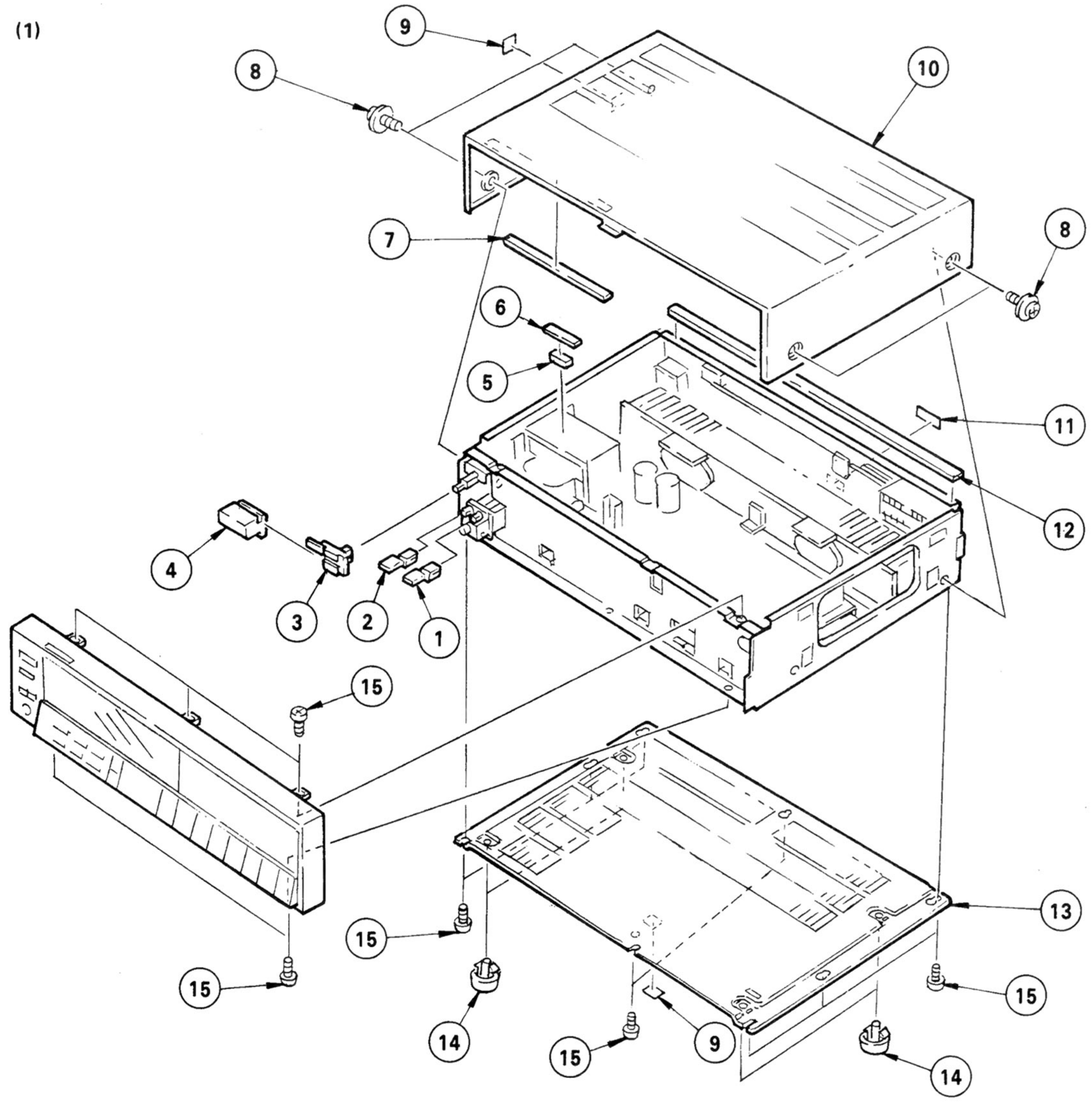

No.	Part No.	Description	REMARKS
1	4-876-722-11	(SILVER)...KNOB (4X10), SQUARE	
	4-876-722-71	(BLACK)....KNOB (4X10), SQUARE	
2	4-876-722-01	(SILVER)...KNOB (4X10), SQUARE	
	4-876-722-61	(BLACK)....KNOB (4X10), SQUARE	
3	*4-902-831-01	JOINT (G), KNOB	
4	3-318-911-31	(SILVER)...KNOB (POWER.L), T MOLD	
	3-318-911-41	(BLACK)....KNOB (POWER.L), T MOLD	
5	9-911-846-XX	CUSHION (A)	
6	9-911-840-XX	(AV560)...SPACER (A), CUSHION	
7	9-911-845-XX	CUSHION	
8	4-889-321-01	(SILVER)...SCREW	
	4-889-321-11	(BLACK)....SCREW	
9	*3-703-680-00	LABEL, CAUTION, SUB, NEW UL	
10	4-906-768-01	(SILVER)...CASE	
	4-906-768-11	(BLACK)....CASE	
11	*4-302-759-00	LABEL, SERIAL NUMBER	
12	4-848-642-00	CUSHION, VIBRATION	
13	*4-906-767-01	PLATE, BOTTOM	
14	X-3701-069-0	FOOT ASSY, M.F	
15	7-685-871-01	SCREW +BVTT 3X6 (S)	

(2)

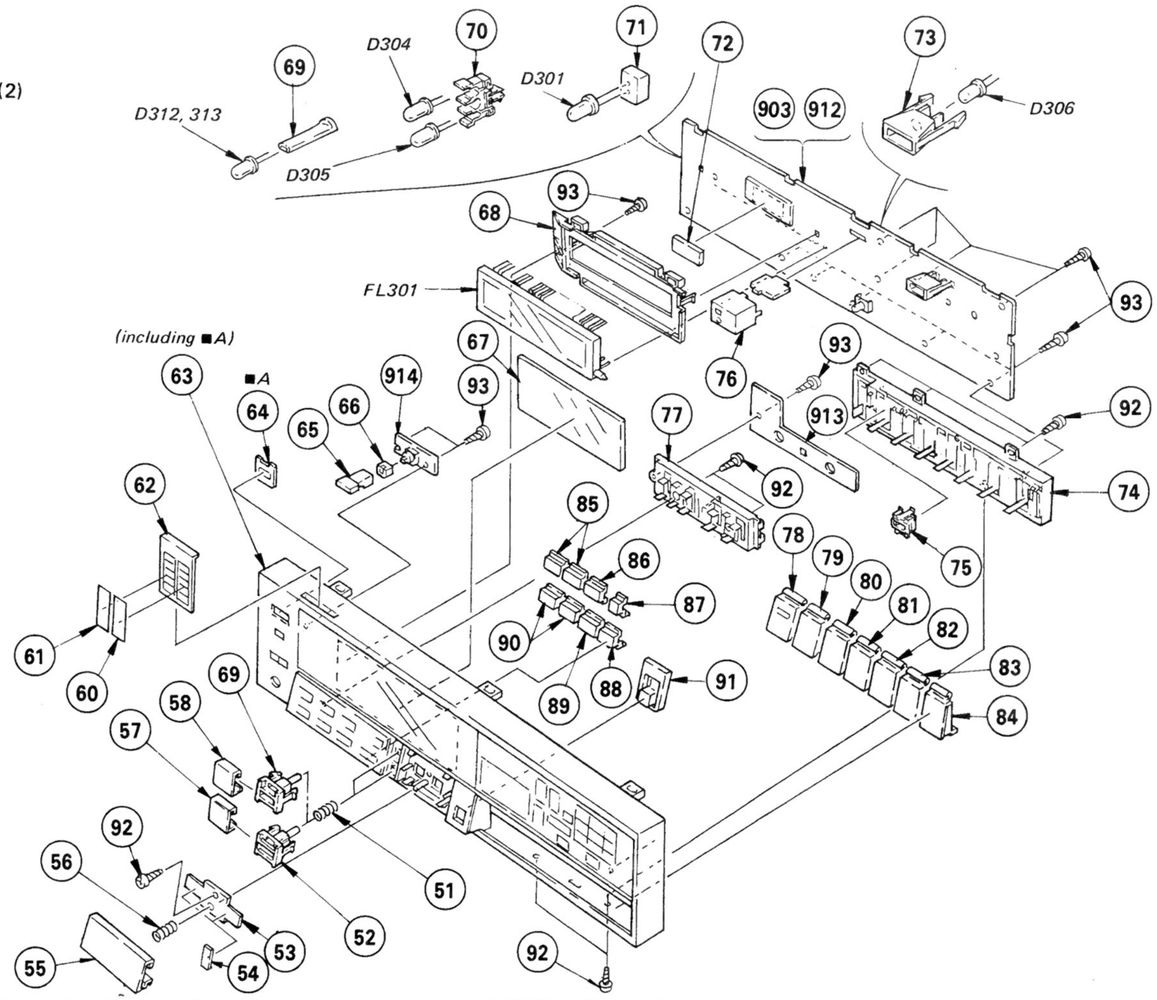

No.	Part No.	Description	REMARKS
51	4-886-032-00	SPRING, COMPRESSION	
52	*4-906-750-01	JOINT (F), KNOB	
53	*4-906-728-01	RETAINER, HINGE	
54	9-911-839-XX	CUSHION (B)	
55	4-906-733-01	(SILVER)...KNOB (CONTROL), T	
	4-906-733-11	(BLACK)....KNOB (CONTROL), T	
56	3-568-315-01	SPRING, COMPRESSION	
57	4-906-729-11	(SILVER)...KNOB (A/F), T	
	4-906-729-31	(BLACK)....KNOB (A/F), T	
58	4-906-729-01	(SILVER)...KNOB (A/F), T	
	4-906-729-21	(BLACK)....KNOB (A/F), T	
59	*4-906-749-01	JOINT (A), KNOB	
60	*4-906-708-01	LABEL (A), STATION	
61	*4-906-709-01	LABEL (F), STATION	
62	4-906-711-01	HOLDER, STATION	
63	X-4906-713-1	(AV760:BLACK)...PANEL ASSY, FRONT	
	X-4906-723-1	(AV560:BLACK)...PANEL ASSY, FRONT	
64	3-318-916-01	ESCUTCHEON (B), POWER KNOB	
65	4-888-133-11	KNOB (5X19), SQUARE	
66	*4-881-725-00	RING (TACT), FLEXIBLE	
67	4-906-737-01	FILTER	
68	*4-906-766-01	HOLDER, INDICATION TUBE	
69	*3-317-118-00	HOLDER (A), LED	
70	*4-905-210-01	HOLDER, LED	
71	*4-881-653-00	SPACER, LED	
72	9-911-845-XX	SPACER	
73	*4-906-752-01	HOLDER, LED	
74	*4-906-756-01	HINGE (B)	
75	*4-906-759-01	HOUSE, LED	
76	*4-888-110-00	CASE, SHIELD	
77	*4-906-727-01	HINGE (A)	
78	X-4906-705-1	(SILVER)...KNOB ASSY, TAPE 2	
	X-4906-706-1	(BLACK)....KNOB ASSY, TAPE 2	
79	4-906-730-51	(SILVER)...KNOB (FUNCTION), T	
	4-906-744-51	(BLACK)....KNOB (FUNCTION), T	
80	4-906-730-41	(SILVER)...KNOB (FUNCTION), T	
	4-906-744-41	(BLACK)....KNOB (FUNCTION), T	
81	4-906-730-31	(SILVER)...KNOB (FUNCTION), T	
	4-906-744-31	(BLACK)....KNOB (FUNCTION), T	
82	4-906-730-21	(SILVER)...KNOB (FUNCTION), T	
	4-906-744-21	(BLACK)....KNOB (FUNCTION), T	
83	4-906-730-11	(SILVER)...KNOB (FUNCTION), T	
	4-906-744-11	(BLACK)....KNOB (FUNCTION), T	
84	X-4906-703-1	(SILVER)...KNOB ASSY	
	X-4906-704-1	(BLACK)....KNOB ASSY	
85	4-906-735-01	(SILVER)...KNOB (PUSH B), T	
	4-906-735-51	(BLACK)....KNOB (PUSH B), T	
86	4-906-735-21	(SILVER)...KNOB (PUSH B), T	
	4-906-735-71	(BLACK)....KNOB (PUSH B), T	
87	4-906-734-01	KNOB (PUSH C), T	
88	4-906-735-41	(SILVER)...KNOB (PUSH B), T	
	4-906-735-91	(BLACK)....KNOB (PUSH B), T	
89	4-906-735-31	(SILVER)...KNOB (PUSH B), T	
	4-906-735-81	(BLACK)....KNOB (PUSH B), T	
90	4-906-735-11	(SILVER)...KNOB (PUSH B), T	
	4-906-735-61	(BLACK)....KNOB (PUSH B), T	
91	4-905-206-11	(SILVER)....KNOB, SQUARE	
	4-905-206-21	(BLACK)....KNOB, SQUARE	
92	7-685-646-19	(BLACK).....SCREW +BVTP 3X8 TYPE2 N-S	
92	7-685-646-71	(SILVER)...SCREW +BVTP 3×8 TYPE2 N-S	
93	7-685-646-71	SCREW +BVTP 3X8 TYPE2 N-S	
903	*A-4472-142-A	(AV760)...MOUNTED PCB, DISPLAY	
	*A-4472-143-A	(AV560)...MOUNTED PCB, DISPLAY	
912	*1-614-463-11	PC BOARD, DISPLAY	
913	*1-614-464-11	PC BOARD, TONE	
914	*1-614-465-11	PC BOARD, SYSTEM POWER	

(3)

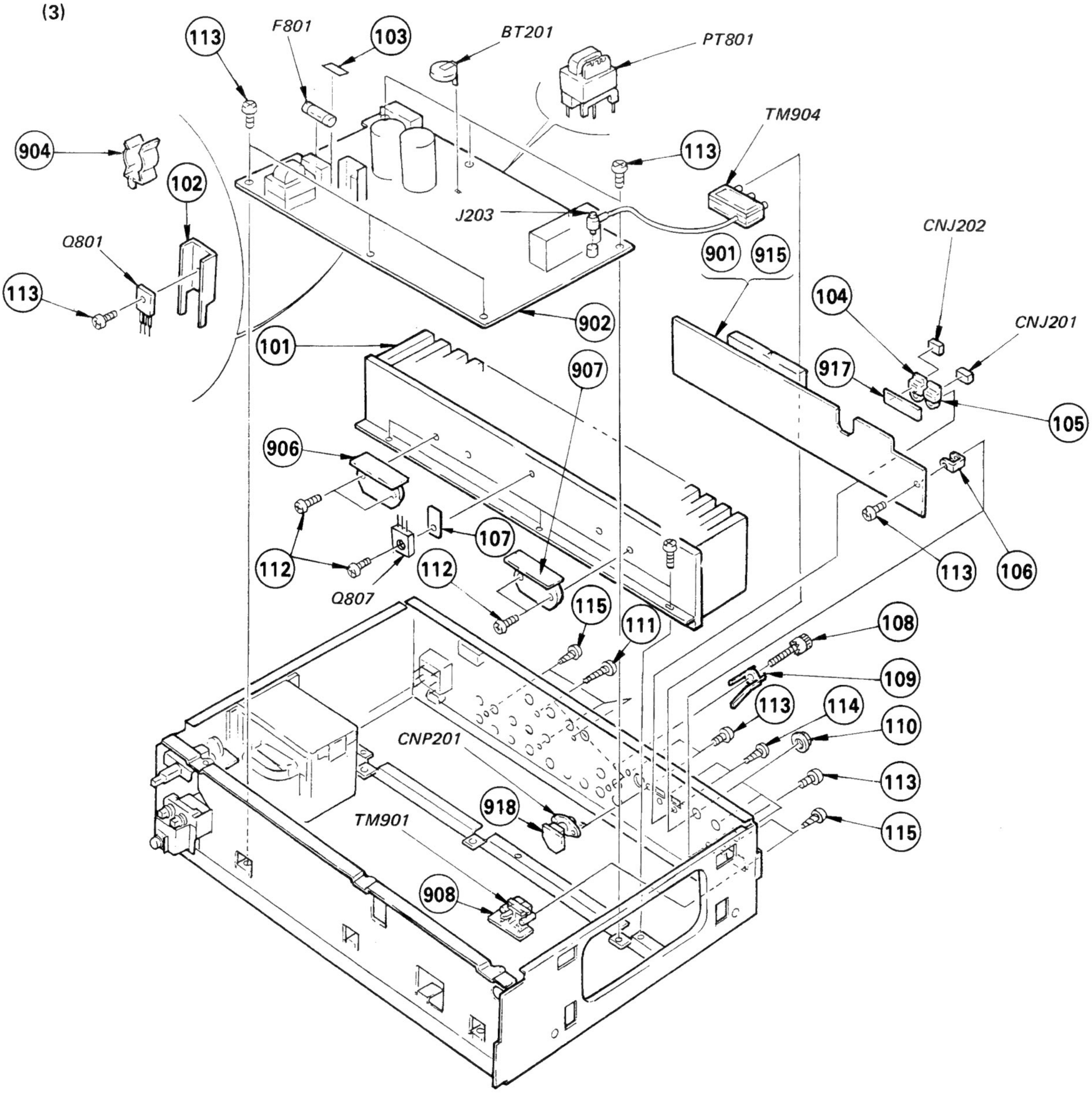

No.	Part No.	Description	REMARKS
101	*4-906-763-01	(AV760)...HEAT SINK (A)	
	*4-906-777-01	(AV560)...HEAT SINK (B)	
102	*4-880-403-00	(AV760)...HEAT SINK	
103	3-701-946-28	(AV760)...LABEL, FUSE	
104	2-364-012-00	SPACER, TERMINAL, 1 GANG	
105	4-882-034-00	SPACER, TERMINAL, 2 GANG	
106	*4-906-742-01	BRACKET, PC BOARD	
107	3-703-207-00	INSULATOR, TO-220	
108	*3-706-165-00	SCREW	
109	3-701-993-00	SPACER, TERMINAL	
110	3-682-691-00	NUT, WASHER HEXAGON	
111	3-703-473-00	SCREW, TERMINAL	
112	7-685-650-71	SCREW +BVTP 3X16 TYPE2 IT-3	
113	7-685-871-01	SCREW +BVTT 3X6 (S)	
114	7-685-134-19	SCREW +BTP 2.6X8 TYPE2 N-S	
115	7-685-646-71	(SILVER)...SCREW +BVTP 3X8 TYPE2 N-S	
901	*A-4382-168-A	(AV760)...MOUNTED PCB, INPUT	
	*A-4382-169-A	(AV560)...MOUNTED PCB, INPUT	
902	*A-4409-938-A	(AV760)...MOUNTED PCB, MAIN	
	*A-4409-943-A	(AV560)...MOUNTED PCB, MAIN	
904	1-517-072-00	LAMP HOLDER	
906	*1-614-456-11	PC BOARD, POWER (L)	
907	*1-614-457-11	PC BOARD, POWER (R)	
908	*1-614-458-11	PC BOARD, ANT	
915	*1-614-466-11	PC BOARD, INPUT	
917	*1-614-469-11	PC BOARD, REMOTE CONTROL TM-A	
918	*1-614-470-11	PC BOARD, REMOTE CONTROL TM-B	

www.hifiengine.com

(4)

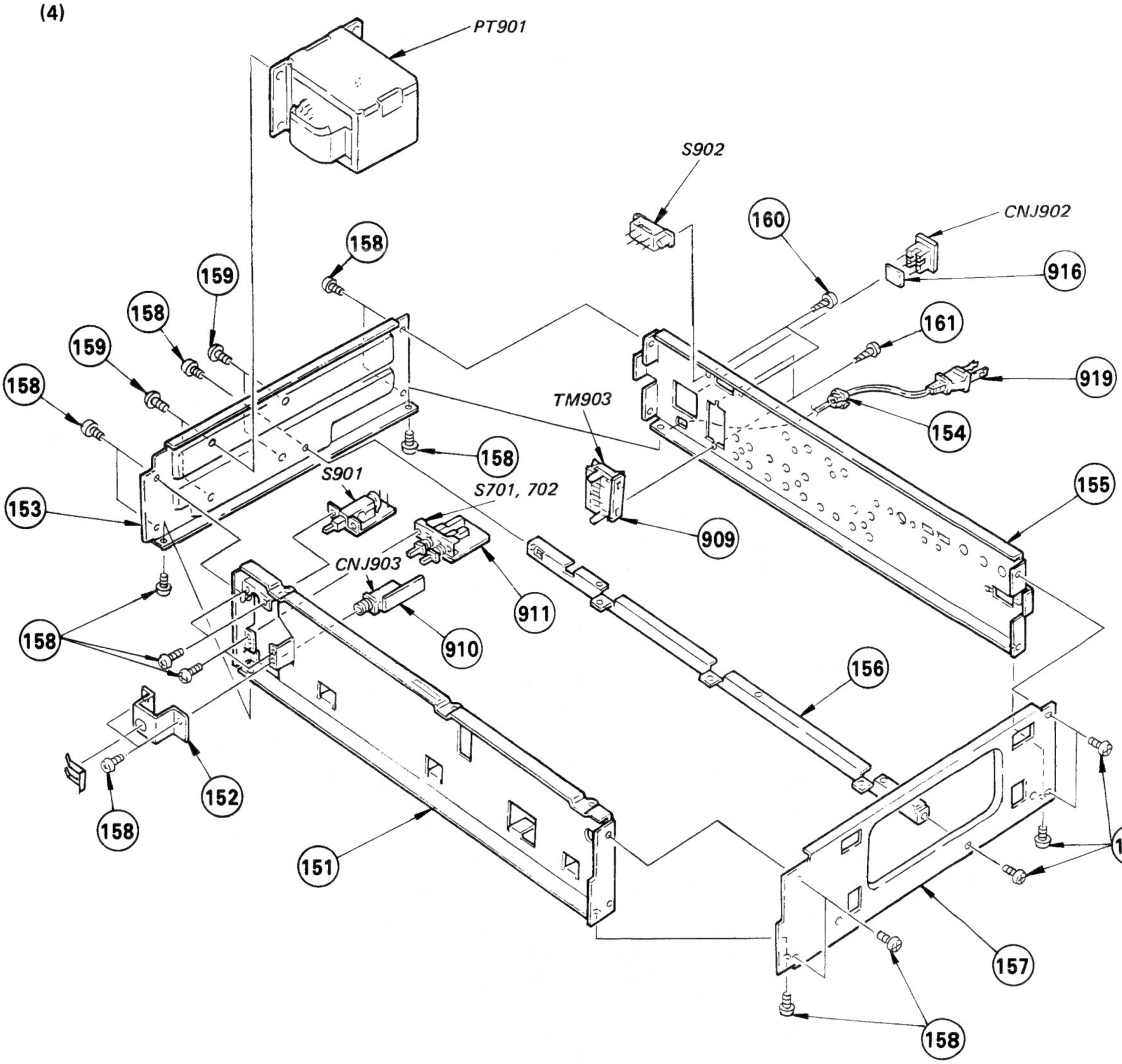

No.	Part No.	Description	REMARKS
151	*4-906-753-01	PANEL, SUB	
152	*4-888-121-00	HOLDER, H.P	
153	*4-906-765-01	PLATE (LEFT), SIDE	
154	⚠ 3-703-571-00	BUSHING (S) (4516), CORD	
155	*4-906-761-01	(AV760)...PLATE, JACK	
	*4-906-761-11	(AV560)...PLATE, JACK	
156	*4-888-145-00	CHANNEL	
157	*4-906-764-01	PLATE (RIGHT), SIDE	
158	7-685-871-01	SCREW +BVTT 3X6 (S)	
159	7-685-880-01	SCREW +BVTT 4X6 (S)	
160	7-685-134-19	SCREW +BTP 2.6X8 TYPE2 N-S	
161	7-685-646-71	(SILVER)...SCREW +BVTP 3X8 TYPE2 N-S	
909	*1-614-460-11	PC BOARD, SP.TM	
910	*1-614-461-11	PC BOARD, H.P	
911	*1-614-462-11	PC BOARD, SP.SW	
916	*1-614-468-11	PC BOARD, OUTLET	
919	⚠ 1-557-579-11	CORD, POWER	

The components identified by shading and mark ⚠ are critical for safety. Replace only with part number specified.

www.hifiengine.com

NOTE:

- Items marked " ★ " are not stocked since they are seldom required for routine service. Some delay should be anticipated when ordering these items.
- If there are two or more same circuitsin a set such as a stereophonic machine, only typical circuit parts may be indicated and capacitors and resistors in other same circuits may be omitted.

CAPACITORS:
MF:μF, PF:μμF.

RESISTORS
- All resistors are in ohms.
- F : nonflammable

COILS
- MMH : mH, UH : μH

SEMICONDUCTORS
In each case, U : μ, for example:
UA...: μA..., UPA...: μPA..., UPC...: μPC,
UPD...: μPD...

The components identified by shading and mark ⚠ are critical for safety. Replace only with part number specified.

ELECTRICAL PARTS

Ref.No.	Part No.	Description
901	*A-4382-168-A	(AV760)...MOUNTED PCB, INPUT
	*A-4382-169-A	(AV560)...MOUNTED PCB, INPUT
902	*A-4409-938-A	(AV760)...MOUNTED PCB, MAIN
	*A-4409-943-A	(AV560)...MOUNTED PCB, MAIN
903	*A-4472-142-A	(AV760)...MOUNTED PCB, DISPLAY
	*A-4472-143-A	(AV560)...MOUNTED PCB, DISPLAY
904	1-517-072-00	LAMP HOLDER
905	*1-614-454-11	PC BOARD, RAY CATCHER
906	*1-614-456-11	PC BOARD, POWER (L)
907	*1-614-457-11	PC BOARD, POWER (R)
908	*1-614-458-11	PC BOARD, ANT
909	*1-614-460-11	PC BOARD, SP.TM
910	*1-614-461-11	PC BOARD, H.P
911	*1-614-462-11	PC BOARD, SP.SW
912	*1-614-463-11	PC BOARD, DISPLAY
913	*1-614-464-11	PC BOARD, TONE
914	*1-614-465-11	PC BOARD, SYSTEM POWER
915	*1-614-466-11	PC BOARD, INPUT
916	*1-614-468-11	PC BOARD, OUTLET
917	*1-614-469-11	PC BOARD, REMOTE CONTROL TM-A
918	*1-614-470-11	PC BOARD, REMOTE CONTROL TM-B
919	⚠1-557-579-11	CORD, POWER
BT201	1-528-120-00	BATTERY, LITHIUM (CR-2025)
C202	1-101-005-00	CERAMIC 0.022MF 50V
C203	1-124-182-00	(AV760)...ELECT 1MF 20% 50V
C204	1-161-494-00	CERAMIC 0.022MF 30% 25V
C205	1-123-332-00	ELECT 47MF 20% 16V
C206	1-161-494-00	CERAMIC 0.022MF 30% 25V
C207	1-162-306-31	CERAMIC 0.01MF 30% 16V
C208	1-162-306-31	(AV760)...CERAMIC 0.01MF 30% 16V
C209	1-162-205-31	(AV760)...CERAMIC 18PF 5% 50V
C210	1-162-294-31	(AV760)...CERAMIC 0.001MF 10% 50V
C212	1-162-306-31	CERAMIC 0.01MF 30% 16V
C213	1-162-306-31	CERAMIC 0.01MF 30% 16V
C214	1-162-306-31	CERAMIC 0.01MF 30% 16V
C215	1-162-294-31	CERAMIC 0.001MF 10% 50V
C216	1-162-306-31	CERAMIC 0.01MF 30% 16V
C217	1-162-306-31	CERAMIC 0.01MF 30% 16V
C218	1-162-294-31	CERAMIC 0.001MF 10% 50V
C219	1-162-306-31	CERAMIC 0.01MF 30% 16V
C220	1-162-306-31	CERAMIC 0.01MF 30% 16V
C221	1-162-211-31	CERAMIC 33PF 5% 50V
C222	1-123-367-00	ELECT 2.2MF 20% 63V

ELECTRICAL PARTS

Ref.No.	Part No.	Description			
C223	1-162-306-31	CERAMIC	0.01MF	30%	16V
C224	1-162-306-31	CERAMIC	0.01MF	30%	16V
C225	1-162-306-31	CERAMIC	0.01MF	30%	16V
C227	1-161-494-00	CERAMIC	0.022MF	30%	25V
C228	1-123-332-00	ELECT	47MF	20%	16V
C229	1-161-494-00	CERAMIC	0.022MF	30%	25V
C230	1-123-379-00	ELECT	0.47MF	20%	50V
C231	1-123-356-00	ELECT	10MF	20%	50V
C232	1-136-162-00	FILM	0.056MF	5%	50V
C233	1-123-356-00	ELECT	10MF	20%	50V
C234	1-130-473-00	MYLAR	0.0015MF	5%	50V
C235	1-123-380-00	ELECT	1MF	20%	50V
C236	1-130-473-00	MYLAR	0.0015MF	5%	50V
C237	1-161-494-00	CERAMIC	0.022MF	30%	25V
C238	1-123-332-00	ELECT	47MF	20%	16V
C239	1-124-270-11	ELECT	0.47MF	20%	50V
C240	1-124-182-00	ELECT	1MF	20%	50V
C241	1-123-380-00	ELECT	1MF	20%	50V
C242	1-123-380-00	ELECT	1MF	20%	50V
C243	1-123-356-00	ELECT	10MF	20%	50V
C244	1-123-356-00	ELECT	10MF	20%	50V
C245	1-136-161-00	FILM	0.047MF	5%	50V
C246	1-124-182-00	ELECT	1MF	20%	50V
C247	1-162-306-31	CERAMIC	0.01MF	30%	16V
C248	1-162-279-31	CERAMIC	75PF	10%	50V
C249	1-162-215-31	CERAMIC	47PF	5%	50V
C250	1-162-306-31	CERAMIC	0.01MF	30%	16V
C251	1-101-005-00	CERAMIC	0.022MF		50V
C253	1-130-473-00	MYLAR	0.0015MF	5%	50V
C254	1-162-306-31	CERAMIC	0.01MF	30%	16V
C255	1-162-205-31	CERAMIC	18PF	5%	50V
C256	1-162-290-31	CERAMIC	470PF	5%	50V
C257	1-101-005-00	CERAMIC	0.022MF		50V
C258	1-162-306-31	CERAMIC	0.01MF	30%	16V
C259	1-162-306-31	CERAMIC	0.01MF	30%	16V
C260	1-162-306-31	CERAMIC	0.01MF	30%	16V
C261	1-162-306-31	CERAMIC	0.01MF	30%	16V
C263	1-162-306-31	CERAMIC	0.01MF	30%	16V
C264	1-123-356-00	ELECT	10MF	20%	50V
C266	1-101-005-00	CERAMIC	0.022MF		50V
C267	1-123-369-00	ELECT	4.7MF	20%	50V
C268	1-162-306-31	CERAMIC	0.01MF	30%	16V
C269	1-162-294-31	CERAMIC	0.001MF	10%	50V
C270	1-123-332-00	ELECT	47MF	20%	16V
C271	1-162-305-31	CERAMIC	0.0068MF	30%	16V

www.hifiengine.com

ELECTRICAL PARTS

Ref.No.	Part No.	Description			
C272	1-123-332-00	ELECT	47MF	20%	16V
C273	1-162-282-31	CERAMIC	100PF	10%	50V
C274	1-162-282-31	CERAMIC	100PF	10%	50V
C275	1-136-169-00	FILM	0.22MF	5%	50V
C276	1-162-294-31	CERAMIC	0.001MF	10%	50V
C277	1-161-494-00	CERAMIC	0.022MF	30%	25V
C278	1-162-282-31	CERAMIC	100PF	10%	50V
C279	1-162-215-31	CERAMIC	47PF	5%	50V
C280	1-162-306-31	CERAMIC	0.01MF	30%	16V
C281	1-123-319-00	ELECT	47MF	20%	16V
C282	1-123-379-00	ELECT	0.47MF	20%	50V
C285	1-162-306-31	CERAMIC	0.01MF	30%	16V
C286	1-162-306-31	CERAMIC	0.01MF	30%	16V
C287	1-123-356-00	ELECT	10MF	20%	50V
C288	1-162-306-31	CERAMIC	0.01MF	30%	16V
C289	1-123-607-00	ELECT	0.1MF	20%	50V
C291	1-123-356-00	ELECT	10MF	20%	50V
C292	1-162-306-31	CERAMIC	0.01MF	30%	16V
C293	1-162-306-31	CERAMIC	0.01MF	30%	16V
C294	1-162-306-31	CERAMIC	0.01MF	30%	16V
C296	1-162-290-31	CERAMIC	470PF	10%	50V
C297	1-162-306-31	CERAMIC	0.01MF	30%	16V
C298	1-162-306-31	CERAMIC	0.01MF	30%	16V
C299	1-162-306-31	CERAMIC	0.01MF	30%	16V
C301	1-162-282-31	CERAMIC	100PF	10%	50V
C302	1-162-282-31	CERAMIC	100PF	10%	50V
C303	1-136-169-00	FILM	0.22MF	5%	50V
C304	1-123-611-00	ELECT	1MF	20%	50V
C305	1-162-306-31	CERAMIC	0.01MF	30%	16V
C306	1-123-612-00	ELECT	2.2MF	20%	50V
C307	1-162-306-31	CERAMIC	0.01MF	30%	16V
C308	1-123-611-00	ELECT	1MF	20%	50V
C310	1-123-647-00	ELECT	47MF	20%	6.3V
C311	1-162-288-31	CERAMIC	330PF	10%	50V
C312	1-123-613-00	ELECT	3.3MF	20%	50V
C313	1-123-611-00	ELECT	1MF	20%	50V
C401	1-123-820-00	ELECT	33MF	20%	16V
C402	1-124-471-00	ELECT	1000MF	20%	6.3V
C403	1-123-661-00	ELECT	100MF	20%	6.3V
C451	1-123-820-00	ELECT	33MF	20%	16V
C452	1-124-471-00	ELECT	1000MF	20%	6.3V
C501	1-162-284-31	CERAMIC	150PF	10%	50V
C502	1-123-333-00	ELECT	100MF	20%	16V
C503	1-162-294-31	CERAMIC	0.001MF	10%	50V

ELECTRICAL PARTS

Ref.No.	Part No.	Description			
C504	1-123-356-00	ELECT	10MF	20%	50V
C505	1-123-308-00	ELECT	220MF	20%	6.3V
C506	1-136-162-00	FILM	0.056MF	5%	50V
C507	1-108-584-00	MYLAR	0.016MF	5%	50V
C508	1-162-302-31	CERAMIC	0.0022MF	30%	16V
C551	1-162-284-31	CERAMIC	150PF	10%	50V
C553	1-162-294-31	CERAMIC	0.001MF	10%	50V
C554	1-123-356-00	ELECT	10MF	20%	50V
C555	1-123-308-00	ELECT	220MF	20%	6.3V
C556	1-136-162-00	FILM	0.056MF	5%	50V
C557	1-108-584-00	MYLAR	0.016MF	5%	50V
C558	1-162-302-31	CERAMIC	0.0022MF	30%	16V
C601	1-123-611-00	ELECT	1MF	20%	50V
C602	1-123-661-00	ELECT	100MF	20%	6.3V
C603	1-136-169-00	FILM	0.22MF	5%	50V
C604	1-136-153-00	FILM	0.01MF	5%	50V
C605	1-136-165-00	FILM	0.1MF	5%	50V
C606	1-123-611-00	ELECT	1MF	20%	50V
C607	1-161-494-00	CERAMIC	0.022MF	30%	25V
C608	1-161-494-00	CERAMIC	0.022MF	30%	25V
C609	1-161-494-00	CERAMIC	0.022MF	30%	25V
C610	1-162-294-31	CERAMIC	0.001MF	10%	50V
C611	1-162-294-31	CERAMIC	0.001MF	10%	50V
C612	1-162-294-31	CERAMIC	0.001MF	10%	50V
C614	1-162-196-31	CERAMIC	5.6PF	10%	50V
C651	1-123-611-00	ELECT	1MF	20%	50V
C652	1-123-661-00	ELECT	100MF	20%	6.3V
C653	1-136-169-00	FILM	0.22MF	5%	50V
C654	1-136-153-00	FILM	0.01MF	5%	50V
C655	1-136-165-00	FILM	0.1MF	5%	50V
C656	1-123-611-00	ELECT	1MF	20%	50V
C664	1-162-196-31	CERAMIC	5.6PF	10%	50V
C701	1-136-161-00	FILM	0.047MF	5%	50V
C702	1-123-381-00	ELECT	2.2MF	20%	63V
C704	1-123-372-00	ELECT	33MF	20%	63V
C705	1-162-286-31	CERAMIC	220PF	10%	50V
C706	1-162-306-31	CERAMIC	0.01MF	30%	16V
C707	1-162-306-31	CERAMIC	0.01MF	30%	16V
C708	1-162-288-31	CERAMIC	330PF	10%	50V
C709	1-123-607-00	ELECT	0.1MF	20%	50V
C710	1-123-381-00	ELECT	2.2MF	20%	63V
C711	1-162-196-31	CERAMIC	5.6PF	10%	50V
C712	1-124-182-00	ELECT	1MF	20%	50V
C713	1-162-286-31	CERAMIC	220PF	10%	50V
C714	1-123-298-00	ELECT	470MF	20%	6.3V

www.hifiengine.com

ELECTRICAL PARTS

Ref.No.	Part No.	Description			
C715	1-123-369-00	ELECT	4.7MF	20%	50V
C716	1-123-372-00	ELECT	33MF	20%	63V
C717	1-123-356-00	ELECT	10MF	20%	50V
C751	1-136-161-00	FILM	0.047MF	5%	50V
C752	1-123-381-00	ELECT	2.2MF	20%	63V
C754	1-123-372-00	ELECT	33MF	20%	63V
C755	1-162-286-31	CERAMIC	220PF	10%	50V
C756	1-162-306-31	CERAMIC	0.01MF	30%	16V
C757	1-162-306-31	CERAMIC	0.01MF	30%	16V
C758	1-162-288-31	CERAMIC	330PF	10%	50V
C759	1-123-607-00	ELECT	0.1MF	20%	50V
C760	1-123-381-00	ELECT	2.2MF	20%	63V
C761	1-162-196-31	CERAMIC	5.6PF	10%	50V
C762	1-124-182-00	ELECT	1MF	20%	50V
C763	1-162-286-31	CERAMIC	220PF	10%	50V
C766	1-123-372-00	ELECT	33MF	20%	63V
C767	1-123-356-00	ELECT	10MF	20%	50V
C801 ⚠	1-125-378-11	(AV760)...ELECT(BLOCK)	10000MF	20%	63V
C801 ⚠	1-125-379-00	(AV560)...ELECT(BLOCK)	8200MF	20%	56V
C802 ⚠	1-125-378-11	(AV760)...ELECT(BLOCK)	10000MF	20%	63V
C802 ⚠	1-125-379-00	(AV560)...ELECT(BLOCK)	8200MF	20%	56V
C803	1-123-516-00	ELECT	470MF	20%	50V
C804	1-123-517-00	ELECT	1000MF	20%	50V
C805	1-123-324-00	ELECT	1000MF	20%	16V
C806	1-123-319-00	ELECT	47MF	20%	16V
C807	1-123-357-00	ELECT	22MF	20%	35V
C809	1-162-294-31	CERAMIC	0.001MF	10%	50V
C810	1-123-332-00	ELECT	47MF	20%	16V
C811	1-123-357-00	ELECT	22MF	20%	35V
C812	1-162-294-31	CERAMIC	0.001MF	10%	50V
C813	1-123-332-00	ELECT	47MF	20%	16V
C814	1-162-282-31	CERAMIC	100PF	10%	50V
C815 ⚠	1-161-744-00	CERAMIC	0.01MF		400V
C816	1-123-356-00	ELECT	10MF	20%	50V
C817	1-123-357-00	ELECT	22MF	20%	35V
C818	1-162-294-31	CERAMIC	0.001MF	10%	50V
C819	1-123-360-00	ELECT	100MF	20%	50V
C820	1-162-306-31	CERAMIC	0.01MF	30%	16V
C823	1-123-607-00	ELECT	0.1MF	20%	50V
C824	1-162-282-31	CERAMIC	100PF	10%	50V
CF201	1-527-567-00	FILTER, CERAMIC			
CF202	1-527-567-00	FILTER, CERAMIC			
CF203	1-527-567-00	FILTER, CERAMIC			
CF204	1-567-286-11	OSCILLATOR, CERAMIC			

ELECTRICAL PARTS

Ref.No.	Part No.	Description
CF206	1-527-817-00	FILTER, CERAMIC
CF207	1-527-937-00	FILTER, CERAMIC
CF208	1-527-822-00	OSCILLATOR, CERAMIC
CNJ201	*1-560-039-00	PIN, CONNECTOR (PLAYER)
CNJ202	*1-508-994-00	PIN, CONNECTOR (CD)
⚠CNJ902	1-526-883-00	OUTLET, AC
CNJ903	1-507-863-21	JACK, LARGE TYPE (HEADPHONES)
CNP1	*1-560-602-00	PIN, CONNECTOR 3P
CNP2	*1-560-602-00	PIN, CONNECTOR 3P
CNP3	*1-560-605-00	PIN, CONNECTOR 6P
CNP4	*1-560-708-00	PIN, CONNECTOR 2P
CNP5	*1-560-603-00	PIN, CONNECTOR 4P
CNP6	*1-560-602-00	PIN, CONNECTOR 3P
CNP7	*1-560-603-00	PIN, CONNECTOR 4P
CNP8	*1-560-603-00	PIN, CONNECTOR 4P
CNP9	*1-560-604-00	PIN, CONNECTOR 5P
CNP10	*1-560-603-00	PIN, CONNECTOR 4P
CNP11	*1-560-708-00	PIN, CONNECTOR 2P
CNP12	*1-560-604-00	PIN, CONNECTOR 5P
CNP14	*1-560-708-00	PIN, CONNECTOR 2P
CNP15	*1-562-327-00	SOCKET, CONNECTOR 3P
CNP201	*1-562-544-11	SOCKET, CONNECTOR (TAPE RECORDER)
CP801 ⚠	1-102-394-00	CERAMIC 0.01MF 250V
CP802 ⚠	1-102-394-00	CERAMIC 0.01MF 250V
CP803 ⚠	1-102-394-00	CERAMIC 0.01MF 250V
CP804 ⚠	1-102-394-00	CERAMIC 0.01MF 250V
CP805 ⚠	1-102-394-00	CERAMIC 0.01MF 250V
CP806 ⚠	1-102-394-00	CERAMIC 0.01MF 250V
CT201	1-141-171-00	CAP, TRIMMER 20P
CT202	1-141-171-00	CAP, TRIMMER 20P
D202	8-719-815-55	DIODE 1S1555
D203	8-719-815-55	DIODE 1S1555
D204	8-719-107-57	DIODE 1S953-7
D205	8-719-815-55	DIODE 1S1555
D206	8-719-815-55	DIODE 1S1555
D209	8-719-000-12	DIODE MC931
D210	8-719-107-57	DIODE 1S953-7
D211	8-719-912-28	DIODE KV1226-F
D212	8-719-000-12	DIODE MC931
D213	8-719-107-57	DIODE 1S953-7
D214	8-719-107-57	DIODE 1S953-7
D215	8-719-107-57	DIODE 1S953-7
D216	8-719-107-57	DIODE 1S953-7
D217	8-719-902-56	DIODE PC817
D218	8-719-107-57	DIODE 1S953-7
D219	8-719-107-57	DIODE 1S953-7

The components identified by shading and mark ⚠ are critical for safety. Replace only with part number specified.

www.hifiengine.com

ELECTRICAL PARTS

Ref.No.	Part No.	Description
D221	8-719-107-57	DIODE 1S953-7
D222	8-719-107-57	DIODE 1S953-7
D301	8-719-101-40	DIODE RD3.9EL1
D302	8-719-107-57	DIODE 1S953-7
D303	8-719-107-57	DIODE 1S953-7
D304	8-719-107-57	DIODE 1S953-7
D307	8-719-110-32	DIODE PH302B *
D308	8-719-800-89	DIODE TLY255
D309	8-719-904-55	DIODE GL-5HD5
D310	8-719-800-86	DIODE TLG255
D311	8-719-907-91	DIODE GL-5EG521-A
D312	8-719-906-58	DIODE GL-5HD21
D313	8-719-906-58	DIODE GL-5HD21
D315	8-719-107-57	DIODE 1S953-7
D316	8-719-107-57	DIODE 1S953-7
D317	8-719-107-57	DIODE 1S953-7
D318	8-719-107-57	DIODE 1S953-7
D319	8-719-107-57	DIODE 1S953-7
D320	8-719-107-57	DIODE 1S953-7
D321	8-719-107-57	DIODE 1S953-7
D322	8-719-107-57	DIODE 1S953-7
D401	8-719-107-57	DIODE 1S953-7
D402	8-719-107-57	DIODE 1S953-7
D501	8-719-107-57	DIODE 1S953-7
D601	8-719-101-51	DIODE RD5.1EL3
D701	8-719-107-57	DIODE 1S953-7
D702	8-719-107-57	DIODE 1S953-7
D703	8-719-107-57	DIODE 1S953-7
D704	8-719-107-57	DIODE 1S953-7
D705	8-719-107-57	DIODE 1S953-7
D752	8-719-107-57	DIODE 1S953-7
D753	8-719-107-57	DIODE 1S953-7
D754	8-719-107-57	DIODE 1S953-7
D801 ⚠	8-719-511-20	DIODE S1VB20
D805 ⚠	8-719-200-56	DIODE 30DC1
D806 ⚠	8-719-200-58	DIODE 30DC1R
D807	8-719-913-31	DIODE HZ33-1L
D808 ⚠	8-719-910-75	DIODE HZ7B2L
D809	8-719-910-69	DIODE HZ6C3L
D810	8-719-922-72	DIODE HZ27-2L
D811 ⚠	8-719-200-02	DIODE 10E2
D812 ⚠	8-719-200-02	DIODE 10E2
D813 ⚠	8-719-200-02	DIODE 10E2
D814 ⚠	8-719-200-02	DIODE 10E2
D815 ⚠	8-719-000-06	DIODE MC921
D816	8-719-107-57	DIODE 1S953-7
D817	8-719-901-62	DIODE HZ16-2L

ELECTRICAL PARTS

Ref.No.	Part No.	Description
F801 ⚠	1-532-272-XX	(AV560)...FUSE
F801 ⚠	1-532-509-00	(AV760)...FUSE, GLASS TUBE 6.3A
FE101	A-4344-047-A	FM FRONT-END
FL301	1-519-332-11	INDICATOR TUBE, FLUORESCENT
IC201	8-759-600-02	(AV760)...IC M5218L
IC202	8-759-812-35	IC LA1235
IC203	8-759-801-20	IC LA3400
IC204	8-759-812-45	IC LA1245
IC205	8-759-925-20	IC CX-7925B
IC206	8-759-203-97	IC TC5090AP
IC207	8-759-302-91	IC HD614042SB02
IC301	8-759-302-90	IC HD614042SB01
IC302	8-752-010-60	IC CX20106
IC401	8-759-801-01	IC LC4966
IC402	8-759-801-01	IC LC4966
IC403	8-759-801-01	IC LC4966
IC501	8-759-602-18	IC M5219L
IC601	8-759-602-31	IC M5209P
IC602	8-757-890-00	IC CX-789
IC651	8-759-602-31	IC M5209P
IC701 ⚠	8-749-940-42	(AV760)...IC STK4042XI
IC701 ⚠	8-749-940-38	(AV560)...IC STK4038XI
IC702	8-759-600-02	IC M5218L
IC751 ⚠	8-749-940-42	(AV760)...IC STK4042XI
IC751 ⚠	8-749-940-38	(AV560)...IC STK4038XI
J203	1-507-567-21	JACK, PIN 1P
J601	1-507-877-00	JACK, PIN 4P
J602	1-507-877-00	JACK, PIN 4P
J603	1-507-877-00	JACK, PIN 4P
J604	1-507-877-00	JACK, PIN 4P
J605	1-507-888-21	JACK, PIN 2P
J606	1-507-877-00	JACK, PIN 4P
J607	1-507-877-00	JACK, PIN 4P
J608	1-507-877-00	JACK, PIN 4P
J609	1-507-877-00	JACK, PIN 4P
J610	1-507-888-00	JACK, PIN 2P
J611	1-507-888-00	JACK, PIN 2P
J612	1-507-876-00	JACK, PIN 2P
J613	1-507-876-00	JACK, PIN 2P
J651	1-507-877-00	JACK, PIN 4P
J652	1-507-877-00	JACK, PIN 4P
J653	1-507-877-00	JACK, PIN 4P
J654	1-507-877-00	JACK, PIN 4P
J655	1-507-888-21	JACK, PIN 2P
J656	1-507-877-00	JACK, PIN 4P
J657	1-507-877-00	JACK, PIN 4P

The components identified by shading and mark ⚠ are critical for safety. Replace only with part number specified.

www.hifiengine.com

ELECTRICAL PARTS

Ref.No.	Part No.	Description
J658	1-507-877-00	JACK, PIN 4P
J659	1-507-877-00	JACK, PIN 4P
L202	1-408-575-00	MICRO INDUCTOR 100UH
L204	1-408-575-00	MICRO INDUCTOR 100UH
L205	1-408-575-00	MICRO INDUCTOR 100UH
L301	1-408-575-00	MICRO INDUCTOR 100UH
L501	1-407-519-00	(AV760)...INDUCTOR 8UH
L551	1-407-519-00	(AV760)...INDUCTOR 8UH
L701	*1-420-872-00	COIL, AIR CORE
L751	*1-420-872-00	COIL, AIR CORE
LPF201	1-235-164-00	FILTER, LOW PASS
LPF202	1-235-164-00	FILTER, LOW PASS
PT801⚠	1-447-969-11	TRANSFORMER, POWER
PT901⚠	1-447-970-11	(AV760)...TRANSFORMER, POWER
PT901⚠	1-447-971-11	(AV560)...TRANSFORMER, POWER
Q201	8-729-672-42	(AV760)...TRANSISTOR 2SC2724-C
Q203	8-729-672-42	TRANSISTOR 2SC2724-C
Q204	8-729-672-42	TRANSISTOR 2SC2724-C
Q205	8-729-672-42	TRANSISTOR 2SC2724-C
Q206	8-729-672-42	TRANSISTOR 2SC2724-C
Q207	8-729-173-37	TRANSISTOR 2SA733
Q208	8-729-606-33	TRANSISTOR 2SC2603F
Q209	8-729-900-83	TRANSISTOR DTC124XS
Q210	8-729-606-33	TRANSISTOR 2SC2603E
Q211	8-729-606-33	TRANSISTOR 2SC2603E
Q212	8-729-203-03	TRANSISTOR 2SK30A-Y
Q213	8-729-900-67	TRANSISTOR DTA124XS
Q214	8-729-900-67	TRANSISTOR DTA124XS
Q215	8-729-900-67	TRANSISTOR DTA124XS
Q216	8-729-665-47	TRANSISTOR 2SC1362
Q218	8-729-203-05	TRANSISTOR 2SK30A-GR3
Q219	8-729-606-33	TRANSISTOR 2SC2603F
Q220	8-729-606-33	TRANSISTOR 2SC2603F
Q221	8-729-900-67	TRANSISTOR DTA124XS
Q222	8-729-900-67	TRANSISTOR DTA124XS
Q223	8-729-606-33	TRANSISTOR 2SC2603F
Q224	8-729-606-33	TRANSISTOR 2SC2603F
Q225	8-729-606-33	TRANSISTOR 2SC2603F
Q226	8-729-606-33	TRANSISTOR 2SC2603F
Q227	8-729-606-33	TRANSISTOR 2SC2603F
Q228	8-729-606-33	TRANSISTOR 2SC2603F
Q229	8-729-606-33	TRANSISTOR 2SC2603F
Q230	8-729-606-33	TRANSISTOR 2SC2603F
Q231	8-729-900-67	TRANSISTOR DTA124XS
Q232	8-729-900-74	TRANSISTOR DTC143TS

ELECTRICAL PARTS

Ref.No.	Part No.	Description
Q233	8-729-606-33	TRANSISTOR 2SC2603F
Q234	8-729-900-74	TRANSISTOR DTC143TS
Q235	8-729-900-67	TRANSISTOR DTA124XS
Q236	8-729-900-83	TRANSISTOR DTC124XS
Q237	8-729-900-67	TRANSISTOR DTA124XS
Q238	8-729-900-67	TRANSISTOR DTA124XS
Q239	8-729-900-67	TRANSISTOR DTA124XS
Q240	8-729-900-67	TRANSISTOR DTA124XS
Q241	8-729-900-83	TRANSISTOR DTC124XS
Q242	8-729-900-83	TRANSISTOR DTC124XS
Q243	8-729-900-83	TRANSISTOR DTC124XS
Q244	8-729-900-83	TRANSISTOR DTC124XS
Q245	8-729-900-83	TRANSISTOR DTC124XS
Q301	8-729-900-67	TRANSISTOR DTA124XS
Q302	8-729-900-67	TRANSISTOR DTA124XS
Q303	8-729-900-74	TRANSISTOR DTC143TS
Q304	8-729-900-74	TRANSISTOR DTC143TS
Q305	8-729-900-74	TRANSISTOR DTC143TS
Q306	8-729-900-74	TRANSISTOR DTC143TS
Q307	8-729-900-74	TRANSISTOR DTC143TS
Q308	8-729-900-74	TRANSISTOR DTC143TS
Q309	8-729-900-74	TRANSISTOR DTC143TS
Q310	8-729-900-74	TRANSISTOR DTC143TS
Q311	8-729-900-67	TRANSISTOR DTA124XS
Q312	8-729-900-67	TRANSISTOR DTA124XS
Q313	8-729-900-67	TRANSISTOR DTA124XS
Q314	8-729-900-67	TRANSISTOR DTA124XS
Q315	8-729-900-67	TRANSISTOR DTA124XS
Q316	8-729-900-67	TRANSISTOR DTA124XS
Q317	8-729-900-67	TRANSISTOR DTA124XS
Q318	8-729-900-67	TRANSISTOR DTA124XS
Q319	8-729-900-83	TRANSISTOR DTC124XS
Q320	8-729-900-67	TRANSISTOR DTA124XS
Q322	8-729-900-67	TRANSISTOR DTA124XS
Q401	8-729-606-33	TRANSISTOR 2SC2603F
Q402	8-729-606-33	TRANSISTOR 2SC2603F
Q403	8-729-606-33	TRANSISTOR 2SC2603F
Q404	8-729-606-33	TRANSISTOR 2SC2603F
Q451	8-729-606-33	TRANSISTOR 2SC2603F
Q452	8-729-606-33	TRANSISTOR 2SC2603F
Q453	8-729-606-33	TRANSISTOR 2SC2603F
Q454	8-729-606-33	TRANSISTOR 2SC2603F
Q501	8-729-217-03	TRANSISTOR 2SK170
Q502	8-729-217-03	TRANSISTOR 2SK170
Q503	8-729-900-83	TRANSISTOR DTC124XS

The components identified by shading and mark ⚠ are critical for safety. Replace only with part number specified.

www.hifiengine.com

ELECTRICAL PARTS

Ref.No.	Part No.	Description
Q551	8-729-217-03	TRANSISTOR 2SK170
Q552	8-729-217-03	TRANSISTOR 2SK170
Q701	8-729-204-91	TRANSISTOR 2SA1049
Q702	8-729-606-33	TRANSISTOR 2SC2603F
Q703	8-729-606-33	TRANSISTOR 2SC2603F
Q704	8-729-178-54	TRANSISTOR 2SC2785
Q705	8-729-900-67	TRANSISTOR DTA124XS
Q751	8-729-204-91	TRANSISTOR 2SA1049
Q801	8-729-173-13	TRANSISTOR 2SB731
Q802	8-729-600-08	TRANSISTOR 2SK381-E
Q803	8-729-103-42	TRANSISTOR 2SB734-3
Q804	8-729-173-37	TRANSISTOR 2SA733
Q806	8-729-600-08	TRANSISTOR 2SK381-E
Q807	8-729-103-33	TRANSISTOR 2SD1310
Q808	8-729-180-93	TRANSISTOR 2SD809
Q809	8-729-606-33	TRANSISTOR 2SC2603F
Q810	8-729-178-54	TRANSISTOR 2SC2785
Q811	8-729-600-08	TRANSISTOR 2SK381-E
Q812	8-729-900-67	TRANSISTOR DTA124XS
R201	1-247-879-00	CARBON 100K 5% 1/6W
R202	1-247-903-00	(AV760)...CARBON 1M 5% 1/6W
R203	1-247-857-00	(AV760)...CARBON 12K 5% 1/6W
R204 ⚠	1-247-109-00	CARBON 120 5% 1/4W F
R205	1-247-835-00	CARBON 1.5K 5% 1/6W
R206	1-247-873-00	CARBON 56K 5% 1/6W
R207	1-247-823-00	CARBON 470 5% 1/6W
R208	1-247-799-00	CARBON 47 5% 1/6W
R209	1-247-879-00	(AV760)...CARBON 100K 5% 1/6W
R210	1-247-825-00	(AV760)...CARBON 560 5% 1/6W
R211	1-247-855-00	CARBON 10K 5% 1/6W
R212	1-247-871-00	CARBON 47K 5% 1/6W
R213	1-247-855-00	CARBON 10K 5% 1/6W
R214	1-247-855-00	CARBON 10K 5% 1/6W
R215	1-247-819-00	CARBON 330 5% 1/6W
R216	1-247-825-00	CARBON 560 5% 1/6W
R217	1-247-823-00	CARBON 470 5% 1/6W
R218	1-247-819-00	CARBON 330 5% 1/6W
R219	1-247-859-00	CARBON 15K 5% 1/6W
R220	1-247-855-00	CARBON 10K 5% 1/6W
R221	1-247-855-00	CARBON 10K 5% 1/6W
R222	1-247-865-00	CARBON 27K 5% 1/6W
R223	1-247-819-00	CARBON 330 5% 1/6W
R224	1-247-831-00	CARBON 1K 5% 1/6W
R225	1-247-859-00	CARBON 15K 5% 1/6W
R226	1-247-819-00	CARBON 330 5% 1/6W
R227	1-247-865-00	CARBON 27K 5% 1/6W

ELECTRICAL PARTS

Ref.No.	Part No.	Description
R228	1-247-855-00	CARBON 10K 5% 1/6W
R229	1-247-859-00	CARBON 15K 5% 1/6W
R230	1-247-851-00	CARBON 6.8K 5% 1/6W
R231	1-247-851-00	CARBON 6.8K 5% 1/6W
R232	1-247-831-00	CARBON 1K 5% 1/6W
R233	1-247-851-00	CARBON 6.8K 5% 1/6W
R234	1-247-819-00	CARBON 330 5% 1/6W
R235	1-247-855-00	CARBON 10K 5% 1/6W
R236	1-247-831-00	CARBON 1K 5% 1/6W
R237	1-247-873-00	CARBON 56K 5% 1/6W
R238	1-247-847-00	CARBON 4.7K 5% 1/6W
R239	1-247-855-00	CARBON 10K 5% 1/6W
R240 ⚠	1-247-109-00	CARBON 120 5% 1/4W F
R241 ⚠	1-247-115-00	CARBON 220 5% 1/4W F
R242	1-247-839-00	CARBON 2.2K 5% 1/6W
R243	1-247-855-00	CARBON 10K 5% 1/6W
R244	1-247-863-00	CARBON 22K 5% 1/6W
R245	1-247-873-00	CARBON 56K 5% 1/6W
R246	1-247-873-00	CARBON 56K 5% 1/6W
R247	1-247-855-00	CARBON 10K 5% 1/6W
R248 ⚠	1-247-109-00	CARBON 120 5% 1/4W F
R249	1-247-843-00	CARBON 3.3K 5% 1/6W
R250	1-247-807-00	CARBON 100 5% 1/6W
R251	1-247-833-00	CARBON 1.2K 5% 1/6W
R252	1-247-833-00	CARBON 1.2K 5% 1/6W
R253	1-247-855-00	CARBON 10K 5% 1/6W
R254	1-247-859-00	CARBON 15K 5% 1/6W
R255	1-247-847-00	CARBON 4.7K 5% 1/6W
R256	1-247-151-00	CARBON 6.8K 5% 1/4W
R257	1-247-849-00	CARBON 5.6K 5% 1/6W
R258	1-247-827-00	CARBON 680 5% 1/6W
R259	1-247-819-00	CARBON 330 5% 1/6W
R260	1-247-839-00	CARBON 2.2K 5% 1/6W
R261	1-247-863-00	CARBON 22K 5% 1/6W
R262	1-247-903-00	CARBON 1M 5% 1/6W
R263	1-247-897-00	CARBON 560K 5% 1/6W
R264	1-247-863-00	CARBON 22K 5% 1/6W
R265	1-247-867-00	CARBON 33K 5% 1/6W
R266	1-247-859-00	CARBON 15K 5% 1/6W
R267	1-247-859-00	CARBON 15K 5% 1/6W
R268	1-247-879-00	CARBON 100K 5% 1/6W
R269	1-247-891-00	CARBON 330K 5% 1/6W
R270	1-247-839-00	CARBON 2.2K 5% 1/6W
R271	1-247-823-00	CARBON 470 5% 1/6W
R272	1-247-855-00	CARBON 10K 5% 1/6W

The components identified by shading and mark ⚠ are critical for safety. Replace only with part number specified.

www.hifiengine.com

ELECTRICAL PARTS

Ref.No.	Part No.	Description			
R273	1-247-897-00	CARBON	560K	5%	1/6W
R274	1-247-805-00	CARBON	82	5%	1/6W
R275	1-247-855-00	CARBON	10K	5%	1/6W
R276	1-247-807-00	CARBON	100	5%	1/6W
R277	1-247-843-00	CARBON	3.3K	5%	1/6W
R278 ⚠	1-247-109-00	CARBON	120	5%	1/4W F
R279	1-247-847-00	CARBON	4.7K	5%	1/6W
R280	1-247-855-00	CARBON	10K	5%	1/6W
R281	1-247-841-00	CARBON	2.7K	5%	1/6W
R282	1-247-795-00	CARBON	33	5%	1/6W
R283	1-247-857-00	CARBON	12K	5%	1/6W
R284	1-247-851-00	CARBON	6.8K	5%	1/6W
R285	1-247-795-00	CARBON	33	5%	1/6W
R286	1-247-827-00	CARBON	680	5%	1/6W
R287	1-247-903-00	CARBON	1M	5%	1/6W
R288	1-247-847-00	CARBON	4.7K	5%	1/6W
R289	1-247-859-00	CARBON	15K	5%	1/6W
R290	1-247-869-00	CARBON	39K	5%	1/6W
R291	1-247-849-00	CARBON	5.6K	5%	1/6W
R292	1-247-863-00	CARBON	22K	5%	1/6W
R293	1-247-831-00	CARBON	1K	5%	1/6W
R294	1-247-847-00	CARBON	4.7K	5%	1/6W
R295	1-247-869-00	CARBON	39K	5%	1/6W
R296	1-247-827-00	CARBON	680	5%	1/6W
R297	1-247-825-00	CARBON	560	5%	1/6W
R298	1-247-855-00	CARBON	10K	5%	1/6W
R299	1-247-871-00	CARBON	47K	5%	1/6W
R301	1-247-903-00	CARBON	1M	5%	1/6W
R302	1-247-155-00	CARBON	10K	5%	1/4W
R303	1-247-879-00	CARBON	100K	5%	1/6W
R304	1-247-879-00	CARBON	100K	5%	1/6W
R305	1-247-879-00	CARBON	100K	5%	1/6W
R306	1-247-879-00	CARBON	100K	5%	1/6W
R307	1-247-879-00	CARBON	100K	5%	1/6W
R308	1-247-879-00	CARBON	100K	5%	1/6W
R309	1-247-879-00	CARBON	100K	5%	1/6W
R310	1-247-879-00	CARBON	100K	5%	1/6W
R311	1-247-879-00	CARBON	100K	5%	1/6W
R312	1-247-879-00	CARBON	100K	5%	1/6W
R313	1-247-879-00	CARBON	100K	5%	1/6W
R314	1-247-879-00	CARBON	100K	5%	1/6W
R315	1-247-879-00	CARBON	100K	5%	1/6W
R316	1-247-879-00	CARBON	100K	5%	1/6W
R317	1-247-879-00	CARBON	100K	5%	1/6W
R318	1-247-879-00	CARBON	100K	5%	1/6W

ELECTRICAL PARTS

Ref.No.	Part No.	Description			
R319	1-247-879-00	CARBON	100K	5%	1/6W
R320	1-247-879-00	CARBON	100K	5%	1/6W
R321	1-247-847-00	CARBON	4.7K	5%	1/6W
R322	1-247-863-00	CARBON	22K	5%	1/6W
R323	1-247-855-00	CARBON	10K	5%	1/6W
R324	1-247-855-00	CARBON	10K	5%	1/6W
R325	1-247-807-00	CARBON	100	5%	1/6W
R326	1-247-803-00	CARBON	68	5%	1/6W
R327	1-247-817-00	CARBON	270	5%	1/6W
R328	1-247-799-00	CARBON	47	5%	1/6W
R329	1-247-817-00	CARBON	270	5%	1/6W
R330	1-247-863-00	CARBON	22K	5%	1/6W
R331	1-247-886-00	CARBON	200K	5%	1/6W
R332	1-247-775-00	CARBON	4.7	5%	1/6W
R333	1-247-855-00	CARBON	10K	5%	1/6W
R334	1-247-895-00	CARBON	470K	5%	1/6W
R340	1-247-813-00	CARBON	180	5%	1/6W
R341	1-247-879-00	CARBON	100K	5%	1/6W
R342	1-247-879-00	CARBON	100K	5%	1/6W
R343	1-247-879-00	CARBON	100K	5%	1/6W
R344	1-247-879-00	CARBON	100K	5%	1/6W
R345	1-247-879-00	CARBON	100K	5%	1/6W
R346	1-247-879-00	CARBON	100K	5%	1/6W
R401	1-247-865-00	CARBON	27K	5%	1/6W
R402	1-247-875-00	CARBON	68K	5%	1/6W
R403	1-247-823-00	CARBON	470	5%	1/6W
R404	1-247-839-00	CARBON	2.2K	5%	1/6W
R405	1-247-841-00	CARBON	2.7K	5%	1/6W
R406	1-247-843-00	CARBON	3.3K	5%	1/6W
R407	1-247-807-00	CARBON	100	5%	1/6W
R408	1-247-119-00	CARBON	330	5%	1/4W
R409	1-247-831-00	CARBON	1K	5%	1/6W
R410	1-247-803-00	CARBON	68	5%	1/6W
R411	1-247-804-00	CARBON	75	5%	1/6W
R412	1-247-879-00	CARBON	100K	5%	1/6W
R413 ⚠	1-247-105-00	(AV760)...CARBON	82	5%	1/4W F
R413	1-247-105-00	(AV560)...CARBON	82	5%	1/4W
R414	1-247-879-00	CARBON	100K	5%	1/6W
R415	1-247-879-00	CARBON	100K	5%	1/6W
R416	1-247-879-00	CARBON	100K	5%	1/6W
R417	1-247-879-00	CARBON	100K	5%	1/6W
R418	1-247-855-00	CARBON	10K	5%	1/6W
R419	1-247-855-00	CARBON	10K	5%	1/6W
R451	1-247-865-00	CARBON	27K	5%	1/6W
R452	1-247-875-00	CARBON	68K	5%	1/6W
R453	1-247-823-00	CARBON	470	5%	1/6W

The components identified by shading and mark ⚠ are critical for safety. Replace only with part number specified.

www.hifiengine.com

ELECTRICAL PARTS

Ref.No.	Part No.	Description			
R454	1-247-839-00	CARBON	2.2K	5%	1/6W
R455	1-247-841-00	CARBON	2.7K	5%	1/6W
R456	1-247-843-00	CARBON	3.3K	5%	1/6W
R457	1-247-807-00	CARBON	100	5%	1/6W
R458	1-247-119-00	CARBON	330	5%	1/4W
R459	1-247-831-00	CARBON	1K	5%	1/6W
R460	1-247-803-00	CARBON	68	5%	1/6W
R461	1-247-804-00	CARBON	75	5%	1/6W
R501	1-247-819-00	CARBON	330	5%	1/6W
R502	1-247-815-00	CARBON	220	5%	1/6W
R503	1-247-871-00	CARBON	47K	5%	1/6W
R504	1-247-807-00	CARBON	100	5%	1/6W
R505	1-247-851-00	(AV760)...CARBON	6.8K	5%	1/6W
R506	1-247-831-00	CARBON	1K	5%	1/6W
R507	1-247-831-00	CARBON	1K	5%	1/6W
R508	1-247-813-00	CARBON	180	5%	1/6W
R509	1-247-831-00	CARBON	1K	5%	1/6W
R510	1-247-903-00	CARBON	1M	5%	1/6W
R511	1-247-815-00	CARBON	220	5%	1/6W
R512	1-247-807-00	CARBON	100	5%	1/6W
R513	1-247-806-00	CARBON	91	5%	1/6W
R514	1-247-783-00	CARBON	10	5%	1/6W
R515	1-247-874-00	CARBON	62K	5%	1/6W
R516	1-247-847-00	CARBON	4.7K	5%	1/6W
R517	1-247-101-00	(AV760)...CARBON	56	5%	1/4W
R551	1-247-819-00	CARBON	330	5%	1/6W
R552	1-247-815-00	CARBON	220	5%	1/6W
R553	1-247-871-00	CARBON	47K	5%	1/6W
R554	1-247-807-00	(AV760)...CARBON	100	5%	1/6W
R555	1-247-851-00	CARBON	6.8K	5%	1/6W
R557	1-247-831-00	CARBON	1K	5%	1/6W
R558	1-247-813-00	CARBON	180	5%	1/6W
R559	1-247-831-00	CARBON	1K	5%	1/6W
R560	1-247-903-00	CARBON	1M	5%	1/6W
R561	1-247-815-00	CARBON	220	5%	1/6W
R562	1-247-807-00	CARBON	100	5%	1/6W
R563	1-247-806-00	CARBON	91	5%	1/6W
R564	1-247-783-00	CARBON	10	5%	1/6W
R565	1-247-874-00	CARBON	62K	5%	1/6W
R566	1-247-847-00	CARBON	4.7K	5%	1/6W
R601	1-247-833-00	CARBON	1.2K	5%	1/6W
R602	1-247-833-00	CARBON	1.2K	5%	1/6W
R603	1-247-833-00	CARBON	1.2K	5%	1/6W
R604	1-247-833-00	CARBON	1.2K	5%	1/6W
R605	1-247-833-00	CARBON	1.2K	5%	1/6W

ELECTRICAL PARTS

Ref.No.	Part No.	Description			
R606	1-247-833-00	CARBON	1.2K	5%	1/6W
R607	1-247-833-00	CARBON	1.2K	5%	1/6W
R608	1-247-903-00	CARBON	1M	5%	1/6W
R609	1-247-831-00	CARBON	1K	5%	1/6W
R610	1-247-857-00	CARBON	12K	5%	1/6W
R611	1-247-837-00	(AV760)...CARBON	1.8K	5%	1/6W
R611	1-247-839-00	(AV560)...CARBON	2.2K	5%	1/6W
R612	1-247-887-00	CARBON	220K	5%	1/6W
R613	1-247-149-00	CARBON	5.6K	5%	1/4W
R614	1-247-847-00	CARBON	4.7K	5%	1/6W
R615	1-247-847-00	CARBON	4.7K	5%	1/6W
R616	1-247-847-00	CARBON	4.7K	5%	1/6W
R617	1-247-849-00	CARBON	5.6K	5%	1/6W
R651	1-247-833-00	CARBON	1.2K	5%	1/6W
R652	1-247-833-00	CARBON	1.2K	5%	1/6W
R653	1-247-833-00	CARBON	1.2K	5%	1/6W
R654	1-247-833-00	CARBON	1.2K	5%	1/6W
R655	1-247-833-00	CARBON	1.2K	5%	1/6W
R656	1-247-833-00	CARBON	1.2K	5%	1/6W
R657	1-247-833-00	CARBON	1.2K	5%	1/6W
R658	1-247-903-00	CARBON	1M	5%	1/6W
R659	1-247-831-00	CARBON	1K	5%	1/6W
R660	1-247-857-00	CARBON	12K	5%	1/6W
R661	1-247-837-00	(AV760)...CARBON	1.8K	5%	1/6W
R661	1-247-839-00	(AV560)...CARBON	2.2K	5%	1/6W
R662	1-247-887-00	CARBON	220K	5%	1/6W
R667	1-247-849-00	CARBON	5.6K	5%	1/6W
R701	1-247-079-00	CARBON	4.7	5%	1/4W
R703 ⚠	1-247-192-00	CARBON	10	5%	1/2W F
R704 ⚠	1-213-143-00	METAL OXIDE	1K	5%	1W F
R707	1-247-879-00	CARBON	100K	5%	1/6W
R708 ⚠	1-247-107-00	CARBON	100	5%	1/4W F
R709 ⚠	1-214-789-00	METAL PLATE	0.1		5W
R710	1-247-839-00	CARBON	2.2K	5%	1/6W
R711	1-244-897-00	CARBON	10K	5%	1/2W
R712	1-247-825-00	CARBON	560	5%	1/6W
R713	1-247-863-00	CARBON	22K	5%	1/6W
R714	1-247-863-00	CARBON	22K	5%	1/6W
R715	1-247-867-00	CARBON	33K	5%	1/6W
R716	1-247-887-00	CARBON	220K	5%	1/6W
R717	1-247-833-00	CARBON	1.2K	5%	1/6W
R718	1-247-887-00	CARBON	220K	5%	1/6W
R719	1-247-855-00	CARBON	10K	5%	1/6W
R720	1-247-855-00	CARBON	10K	5%	1/6W
R721	1-247-877-00	CARBON	82K	5%	1/6W
R722	1-247-831-00	CARBON	1K	5%	1/6W

The components identified by shading and mark ⚠ are critical for safety. Replace only with part number specified.

www.hifiengine.com

ELECTRICAL PARTS

Ref.No.	Part No.	Description				
R723	1-247-855-00	CARBON	10K	5%	1/6W	
R724	1-247-879-00	CARBON	100K	5%	1/6W	
R725	1-247-873-00	CARBON	56K	5%	1/6W	
R726	1-247-855-00	CARBON	10K	5%	1/6W	
R727 ⚠	1-247-107-00	CARBON	100	5%	1/4W	F
R730 ⚠	1-217-232-00	WIREWOUND	470	10%	2W	F
R751	1-247-079-00	CARBON	4.7	5%	1/4W	
R753 ⚠	1-247-192-00	CARBON	10	5%	1/2W	F
R758 ⚠	1-247-107-00	CARBON	100	5%	1/4W	F
R759 ⚠	1-214-789-00	METAL PLATE	0.1		5W	
R760	1-247-839-00	CARBON	2.2K	5%	1/6W	
R761	1-244-897-00	CARBON	10K	5%	1/2W	
R762	1-247-825-00	CARBON	560	5%	1/6W	
R763	1-247-863-00	CARBON	22K	5%	1/6W	
R764	1-247-863-00	CARBON	22K	5%	1/6W	
R765	1-247-867-00	CARBON	33K	5%	1/6W	
R766	1-247-887-00	CARBON	220K	5%	1/6W	
R767	1-247-833-00	CARBON	1.2K	5%	1/6W	
R768	1-247-887-00	CARBON	220K	5%	1/6W	
R769	1-247-855-00	CARBON	10K	5%	1/6W	
R770	1-247-855-00	CARBON	10K	5%	1/6W	
R771	1-247-877-00	CARBON	82K	5%	1/6W	
R772	1-247-831-00	CARBON	1K	5%	1/6W	
R777 ⚠	1-247-107-00	CARBON	100	5%	1/4W	F
R780 ⚠	1-217-232-00	WIREWOUND	470	10%	2W	F
R801 ⚠	1-247-079-00	CARBON	4.7	5%	1/4W	F
R802 ⚠	1-247-079-00	CARBON	4.7	5%	1/4W	F
R803	1-247-831-00	CARBON	1K	5%	1/6W	
R807 ⚠	1-217-231-00	(AV560)...WIREWOUND	390	10%	2W	F
R807 ⚠	1-217-311-00	(AV760)...WIREWOUND	120	10%	5W	F
R808	1-247-103-00	(AV560)...CARBON	68	5%	1/4W	
R808 ⚠	1-247-109-00	(AV760)...CARBON	120	5%	1/4W	F
R809	1-247-847-00	CARBON	4.7K	5%	1/6W	
R810	1-247-859-00	CARBON	15K	5%	1/6W	
R811	1-247-833-00	CARBON	1.2K	5%	1/6W	
R812 ⚠	1-217-311-00	WIREWOUND	120	10%	5W	F
R813 ⚠	1-217-311-00	WIREWOUND	120	10%	5W	F
R814	1-247-859-00	CARBON	15K	5%	1/6W	
R815 ⚠	1-202-725-00	SOLID	3.3M	10%	1/2W	
R816 ⚠	1-247-771-00	(AV560)...CARBON	3.3	5%	1/6W	
R816 ⚠	1-247-847-00	(AV760)...CARBON	4.7K	5%	1/6W	
R817 ⚠	1-247-771-00	(AV560)...CARBON	3.3	5%	1/6W	
R817 ⚠	1-247-871-00	(AV760)...CARBON	47K	5%	1/6W	
RT201	1-226-238-00	(AV760)...RES, ADJ, CARBON 50K				
RT202	1-226-238-00	RES, ADJ, CARBON 50K				
RT203	1-226-236-00	RES, ADJ, CARBON 10K				

ELECTRICAL PARTS

Ref.No.	Part No.	Description
RT204	1-226-240-00	RES, ADJ, CARBON 200K
RT205	1-226-236-00	RES, ADJ, CARBON 10K
RY501	1-515-495-00	(AV760)...RELAY
RY551	1-515-495-00	(AV760)...RELAY
RY701	1-515-348-00	RELAY
RY801 ⚠	1-515-516-00	RELAY
S301	1-554-303-00	SWITCH, KEY BOARD (FM ANT-A)
S302	1-554-303-00	SWITCH, KEY BOARD (3)
S303	1-554-303-00	SWITCH, KEY BOARD (6)
S304	1-554-303-00	SWITCH, KEY BOARD (9)
S305	1-554-303-00	SWITCH, KEY BOARD (0)
S306	1-554-303-00	SWITCH, KEY BOARD (FM IF BAND)
S307	1-554-303-00	SWITCH, KEY BOARD (METER SELECT)
S308	1-554-303-00	SWITCH, KEY BOARD (2)
S309	1-554-303-00	SWITCH, KEY BOARD (5)
S310	1-554-303-00	SWITCH, KEY BOARD (8)
S311	1-554-303-00	SWITCH, KEY BOARD (MEMORY SCAN)
S312	1-554-303-00	SWITCH, KEY BOARD (SEARCH START)
S314	1-554-303-00	SWITCH, KEY BOARD (1)
S315	1-554-303-00	SWITCH, KEY BOARD (4)
S316	1-554-303-00	SWITCH, KEY BOARD (7)
S317	1-554-303-00	SWITCH, KEY BOARD (MEMORY PRESET)
S318	1-554-303-00	SWITCH, KEY BOARD (FM LEVEL)
S319	1-554-303-00	SWITCH, KEY BOARD (FM MODE)
S320	1-554-303-00	SWITCH, KEY BOARD (FM ANT-B)
S321	1-554-303-00	SWITCH, KEY BOARD (AM)
S322	1-554-303-00	SWITCH, KEY BOARD (STATION SCAN/+)
S323	1-554-303-00	SWITCH, KEY BOARD (STATION SCAN/-)
S324	1-554-303-00	SWITCH, KEY BOARD (VIDEO)
S325	1-554-303-00	SWITCH, KEY BOARD (AUDIO)
S326	1-554-303-00	SWITCH, KEY BOARD (ACOUSTIC)
S327	1-554-303-00	SWITCH, KEY BOARD (FLAT)
S328	1-554-303-00	SWITCH, KEY BOARD (MUTING)
S329	1-554-303-00	SWITCH, KEY BOARD (VIDEO 1)
S330	1-554-303-00	SWITCH, KEY BOARD (VIDEO 2)
S331	1-554-303-00	SWITCH, KEY BOARD (VOLUME/+)
S332	1-554-303-00	SWITCH, KEY BOARD (VOLUME/-)
S333	1-554-303-00	SWITCH, KEY BOARD (CARTRIDGE)
S334	1-554-303-00	SWITCH, KEY BOARD (TAPE 2)
S335	1-554-303-00	SWITCH, KEY BOARD (TAPE 1)
S336	1-554-303-00	SWITCH, KEY BOARD (PHONO)
S337	1-554-303-00	SWITCH, KEY BOARD (TUNER)
S338	1-554-303-00	SWITCH, KEY BOARD (CD/AUX)
S339	1-554-303-00	SWITCH, KEY BOARD (MEMORY)
S340	1-554-303-00	SWITCH, KEY BOARD (FILTER)

The components identified by shading and mark ⚠ are critical for safety. Replace only with part number specified.

www.hifiengine.com

ELECTRICAL PARTS

Ref.No.	Part No.	Description
S341	1-554-303-00	SWITCH, KEY BOARD (BASS/-)
S342	1-554-303-00	SWITCH, KEY BOARD (BASS/+)
S343	1-554-303-00	SWITCH, KEY BOARD (TREBLE/-)
S344	1-554-303-00	SWITCH, KEY BOARD (TREBLE/+)
S345	1-554-303-00	SWITCH, KEY BOARD (BLANCE/L)
S346	1-554-303-00	SWITCH, KEY BOARD (BLANCE/R)
S347	1-552-412-00	SWITCH, KEY BOARD (SYSTEM CONTROL)
S701	1-570-045-11	SWITCH, PUSH (2 KEY)
S901 ⚠	1-553-318-00	SWITCH, PUSH (AC POWER)(1 KEY)
S902 ⚠	1-570-046-11	SWITCH, VOLTAGE CHANGE
T201	1-404-339-00	TRANSFORMER, DISCRIMINATOR
T202	1-404-338-00	TRANSFORMER, DISCRIMINATOR (FM)
T203	1-405-927-00	COIL, MW OSC
T204	1-402-080-11	COIL, ANT (MW)
T205	1-404-535-11	COIL (WITH IFT)
TM901	1-536-707-00	TERMINAL BOARD, PUSH 2P(ANTENNA)
TM903	1-536-706-00	TERMINAL BOARD (SPEAKER)
TM904	1-513-385-11	SELECTOR, ANTENNA
X301	1-527-822-00	OSCILLATOR, CERAMIC
XT201	1-567-125-00	VIBRATOR, CRYSTAL

ACCESSORY & PACKING MATERIAL

Part No.	Description
1-402-082-11	ANTENNA, FERRITE-ROD (LW/MW/SW)
1-501-224-00	ANTENNA, FEEDER
1-513-379-00	CONVERTER (EAC-25)
3-570-631-00	BAG, POLYETHYLENE
3-701-630-00	BAG, POLYETHYLENE
3-703-390-01	INSTRUCTION
3-760-194-21	MANUAL, INSTRUCTION
3-764-023-21	CARD, CONTROL
4-858-078-00	SHEET, PROTECTION
4-906-720-01	LABEL (M10), STATION
4-906-721-01	LABEL (F1), STATION
4-906-760-01	CUSHION, UPPER
4-906-769-01	(AV760)...INDIVIDUAL CARTON
4-906-778-01	(AV560)...INDIVIDUAL CARTON
4-906-781-01	CUSHION (LEFT), LOWER
4-906-782-01	CUSHION (RIGHT), LOWER

The components identified by shading and mark ⚠ are critical for safety. Replace only with part number specified.

9-951-693-11

Sony Corporation

English
85E0538-1
Printed in Japan
© 1985

www.hifiengine.com