ST-S333ESXII/S730ES

SERVICE MANUAL

US Model
AEP Model
UK Model
ST-S730ES

E Model
ST-S333ESXII

Photo : ST-S730ES

SPECIFICATIONS

FM tuner		
Tuning range		87.5–108 MHz
Intermediate frequency		10.7 MHz
Sensitivity at 46dB (50dB) quieting		16.8 dBf, 1.8 µV (mono) 38.5 dBf, 23 µV (stereo)
Usable sensitivity		11.2 dBf, 1.0 V (IHF)
Signal-to-noise ratio	at 40kHz (75kHz) deviation	95dB (mono) (98dB) 86dB (stereo) (92dB)
Harmonic distortion		WIDE 0.008% (mono) (0.004%) 0.02% (stereo) (0.0075%) NARROW 0.04% (mono) 0.1% (stereo)
Separation at 1 kHz		65 dB (WIDE) 50 dB (NARROW)
Selectivity	at 400 kHz	70 dB (WIDE) 90 dB (NARROW)
	at 300 kHz	40 dB (WIDE) 65 dB (NARROW)
Output	at 40kHz (75kHz) deviation	400mV (750mV)

( ) : US Model

— Continued on page 2 —

MICROFILM

FM STEREO/FM-AM TUNER

SONY®

www.hifiengine.com

AM tuner

Tuning range	Continental European models MW: 522–1,611 kHz (9 kHz step) LW: 144–288 kHz Models for other countries MW: 531〔522〕– 1,611kHz (9kHz step) 530–1,610 kHz (10 kHz step)
Intermediate frequency	450 kHz
Usable sensitivity MW AM loop antenna External antenna LW AM loop antenna External antenna	 250 μV/m 30 μV/m 700 μV/m 200 μV/m
Signal-to-noise ratio	54 dB
Harmonic distortion	0.3%
Selectivity	at 9 kHz: 65 dB (NARROW) 50 dB (WIDE)

〔 〕: US Model

General

Circuit System	FM stereo, FM/AM super-heterodyne tuner PLL quartz-locked digital synthesizer system
Power requirements	U.K. model: 240V AC (or 220 V AC adjustable by authorized Sony personnel), 50/60 Hz Continental European model: 220 V AC (or 240 V AC adjustable by authorized Sony personnel), 50/60 Hz US model : 120V, 60Hz Models for other countries: 120 V, 220 V, and 240 V AC adjustable, 50/60 Hz
Power consumption	19 watts
Dimension	U.K. model Approx. 430 x 85 x 372 mm (w/h/d) (17 x3 $^3/_8$ x 14$^3/_4$ inches) Other models Approx. 470 x 86 x 372 mm (w/h/d) (18 x 3$^1/_2$ x 14$^3/_4$ inches)
Weight	U.K. model Approx. 4.6 kg (10 lb 3 oz) Other models Approx. 5.2 kg (11 lb 8 oz)
Accessories Supplied	Connecting Cord (1) FM ribbon antenna (1) AM loop antenna (1) Antenna connector (1) Remote control cord (4-pin) (1) Short screw (M4 x 8) (4) (For customers except in U.K.)

– MODEL IDENTIFICATION –
(Specification Label)

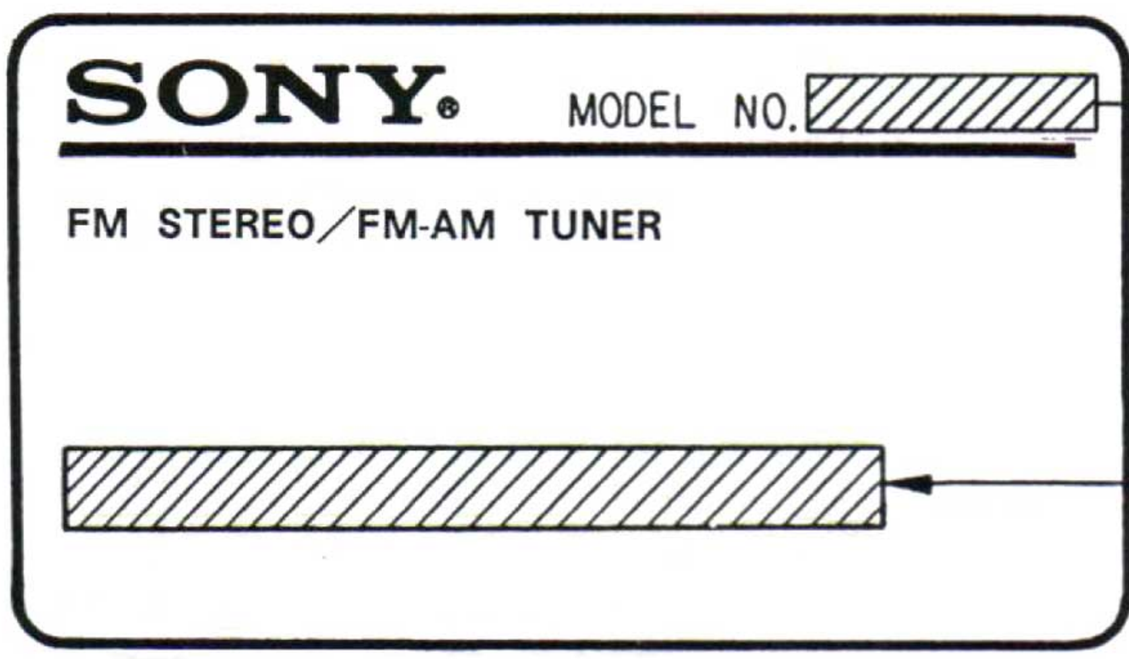

ST-S730ES : US, AEP, UK Model
ST-S333ESX II : E Model

US model	**: AC120V**	**60Hz**	**19W**
AEP model	**: AC220V~**	**50/60Hz**	**19W**
UK model	**: AC240V~**	**50/60Hz**	**19W**
E model	**: AC120/220/240V**	**50/60Hz**	**19W**

www.hifiengine.com

TABLE OF CONTENTS

Section	Title	Page
Specifications		1
Safety Check-out		3
1.	**GENERAL**	
1-1.	Location and Function of Controls	4
2.	**IC PIN FUNCTIONS**	
2-1.	IC601 (μ PD75108CW-107) Pin Functions	5
2-2.	Input and Display List of IC601 (μ PD75108CW-107)	6
2-2-1.	Linked Key Input, Display, and Output	6
2-2-2.	Linked Key Input and Display	7
2-2-3.	Linked Key Input Port and Display	7
2-2-4.	Output Only (IC601)	8
2-2-5.	Dedicated Input Port (IC601)	8
3.	**ELECTRICAL ADJUSTMENTS**	
3-1.	FM Section (1)	9
3-1-1.	PLL Detect Adjustment	10
3-1-2.	Muting Width Adjustment	10
3-1-3.	FM Meter Level Adjustment	10
3-1-4.	FM Muting Level Adjustment	10
3-1-5.	IF Distortion Adjustment	10
3-1-6.	Stereo Operation Adjustment	11
3-1-7.	Stereo Separation Adjustment	11
3-2.	FM Section (2)	11
3-2-1.	Control Voltage Adjustment	11
3-2-2.	SST Circuit Adjustment	11
3-2-3.	Pilot Cancell Adjustment	11
3-2-4.	Tracking Adjustment	12
3-3.	AM Section	12
3-3-1.	AM/ (MW/LW) Meter Level Adjustment	12
3-3-2.	AM Auto Stop Level Adjustment (US, E)	12
3-3-3.	AM/MW Frequency Coverage Adjustment	12
3-3-4.	LW Frequency Coverage Adjustment	12
4.	**DIAGRAMS**	
4-1.	Printed Wiring Boards	13
4-2.	Schematic Diagram	17
4-3.	IC Block Diagram	20
4-4.	Schematic on waveforms	22
4-5.	Semiconductor Lead Layouts	23
5.	**EXPLODED VIEWS**	24
6.	**ELECTRICAL PARTS LIST**	26

SAFETY CHECK-OUT (US Model)

After correcting the original service problem, perform the following safety check before releasing the set to the customer:
Check the antenna terminals, metal trim, "metallized" knobs, screws, and all other exposed metal parts for AC leakage. Check leakage as described below.

LEAKAGE TEST

The AC leakage from any exposed metal part to earth ground and from all exposed metal parts to any exposed metal part having a return to chassis, must not exceed 0.5 mA (500 microampers). Leakage current can be measured by any one of three methods.

1. A commercial leakage tester, such as the Simpson 229 or RCA WT-540A. Follow the manufacturers' instructions to use these instruments.
2. A battery-operated AC milliammeter. The Data Precision 245 digital multimeter is suitable for this job.
3. Measuring the voltage drop across a resistor by means of a VOM or battery-operated AC voltmeter. The "limit" indication is 0.75 V, so analog meters must have an accurate low-voltage scale. The Simpson 250 and Sanwa SH-63Trd are examples of a passive VOM that is suitable. Nearly all battery operated digital multimeters that have a 2 V AC range are suitable. (See Fig. A)

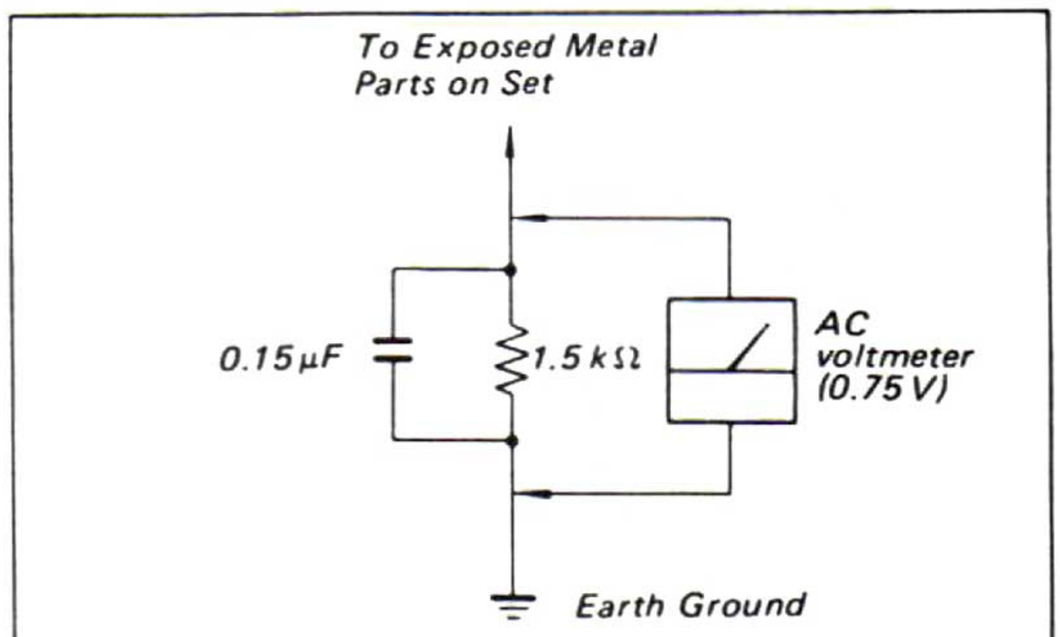

Fig. A. Using an AC voltmeter to check AC leakage.

SAFETY-RELATED COMPONENT WARNING!!

COMPONENTS IDENTIFIED BY MARK ⚠ OR DOTTED LINE WITH MARK ⚠ ON THE SCHEMATIC DIAGRAMS AND IN THE PARTS LIST ARE CRITICAL TO SAFE OPERATION. REPLACE THESE COMPONENTS WITH SONY PARTS WHOSE PART NUMBERS APPEAR AS SHOWN IN THIS MANUAL OR IN SUPPLEMENTS PUBLISHED BY SONY.

ATTENTION AU COMPOSANT AYANT RAPPORT À LA SÉCURITÉ!

LES COMPOSANTS IDENTIFIÉS PAR UNE MARQUE ⚠ SUR LES DIAGRAMMES SCHÉMATIQUES ET LA LISTE DES PIÈCES SONT CRITIQUES POUR LA SÉCURITÉ DE FONCTIONNEMENT. NE REMPLACER CES COMPOSANTS QUE PAR DES PIÈCES SONY DONT LES NUMÉROS SONT DONNÉS DANS CE MANUEL OU DANS LES SUPPLÉMENTS PUBLIÉS PAR SONY.

www.hifiengine.com

SECTION 1
GENERAL

1-1. LOCATION AND FUNCTION OF CONTROLS

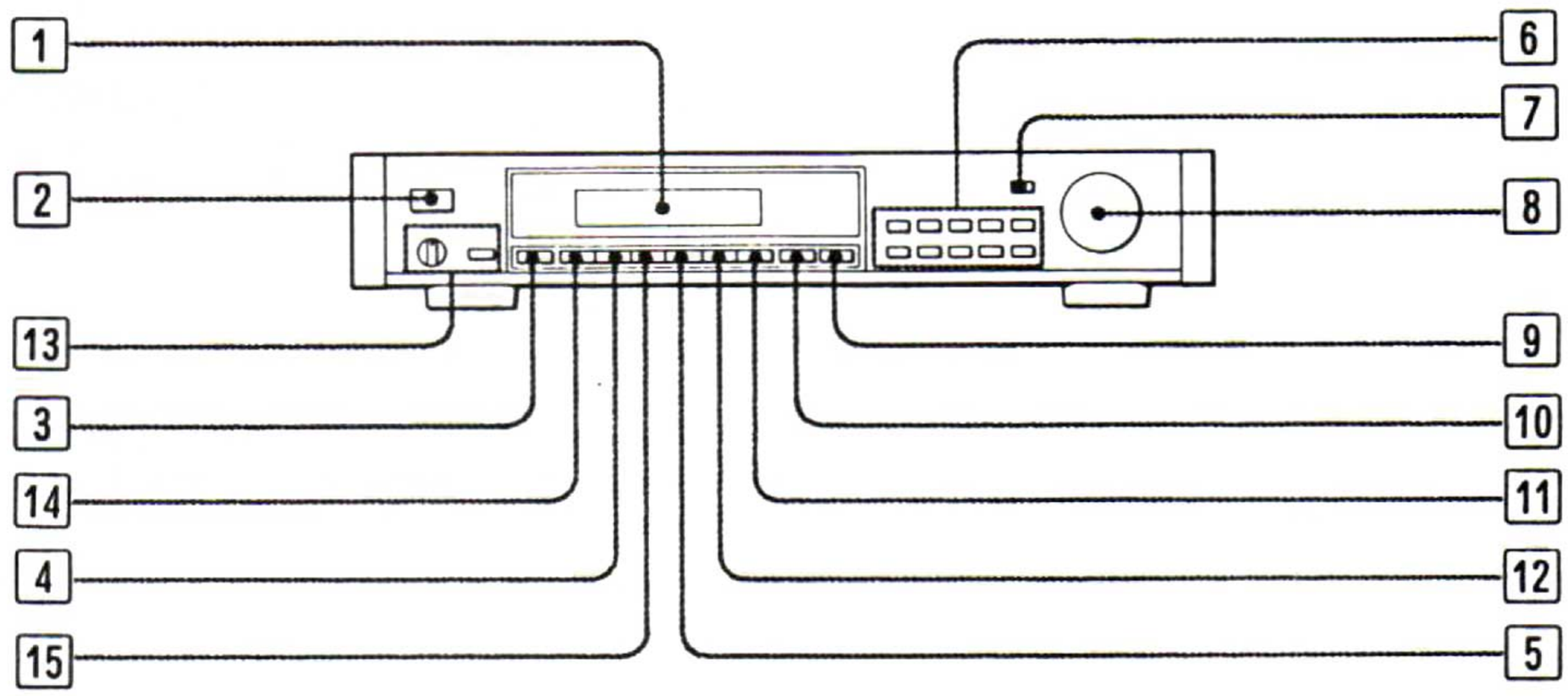

1 Display window
2 POWER switch
3 CAL TONE (calibrating tone) button
Press this button to obtain a 400 Hz, 50% modulated signal for adjusting the recording level on a cassette deck. The indicator lights when a 400 Hz calibrating tone signal is provided. To deactivate the calibrating tone circuit, press the button again.
4 TUNE MODE (tuning mode) button
5 MUTING button
6 PRESET buttons and indicators
(Indicators of ST-S530ES appear in the display)
7 PRESET/TUNING button
8 TUNING knob
9 SHIFT button
10 MEMORY button
11 Band selector
FM/MW/LW (for European models)
FM/AM (for models in other countries)
12 FM MODE button

Indicator	MODE button
AUTO STEREO	
HI-BLEND	
MONO	

13 PROGRAM switch and CHECK button
14 MPX FILTER (multiplex filter) button
Press this button when you record an FM stereo program using the Dolby NR* (Noise Reduction) system. The MPX FILTER indicator appears.
This filter cuts off the 38 kHz subcarrier signals, which may otherwise interfere with proper operation of the Dolby NR* (Noise Reduction). If your deck has an MPX FILTER button, use that button rather than the button of this tuner.
15 IF (intermediate frequency) BAND button
To prevent inter-station interference, press this button. The NARROW indicator appears on the display and the selectivity is improved.

Dolby noise reduction manufactured under license from Dolby Laboratories Licensing Corporation.
"DOLBY" and the double-D symbol DD are trademarks of Dolby Laboratories Licensing Corporation.

www.hifiengine.com

SECTION 2
IC PIN FUNCTIONS

2-1. IC601 (μPD75108CW-107) PIN FUNCTIONS

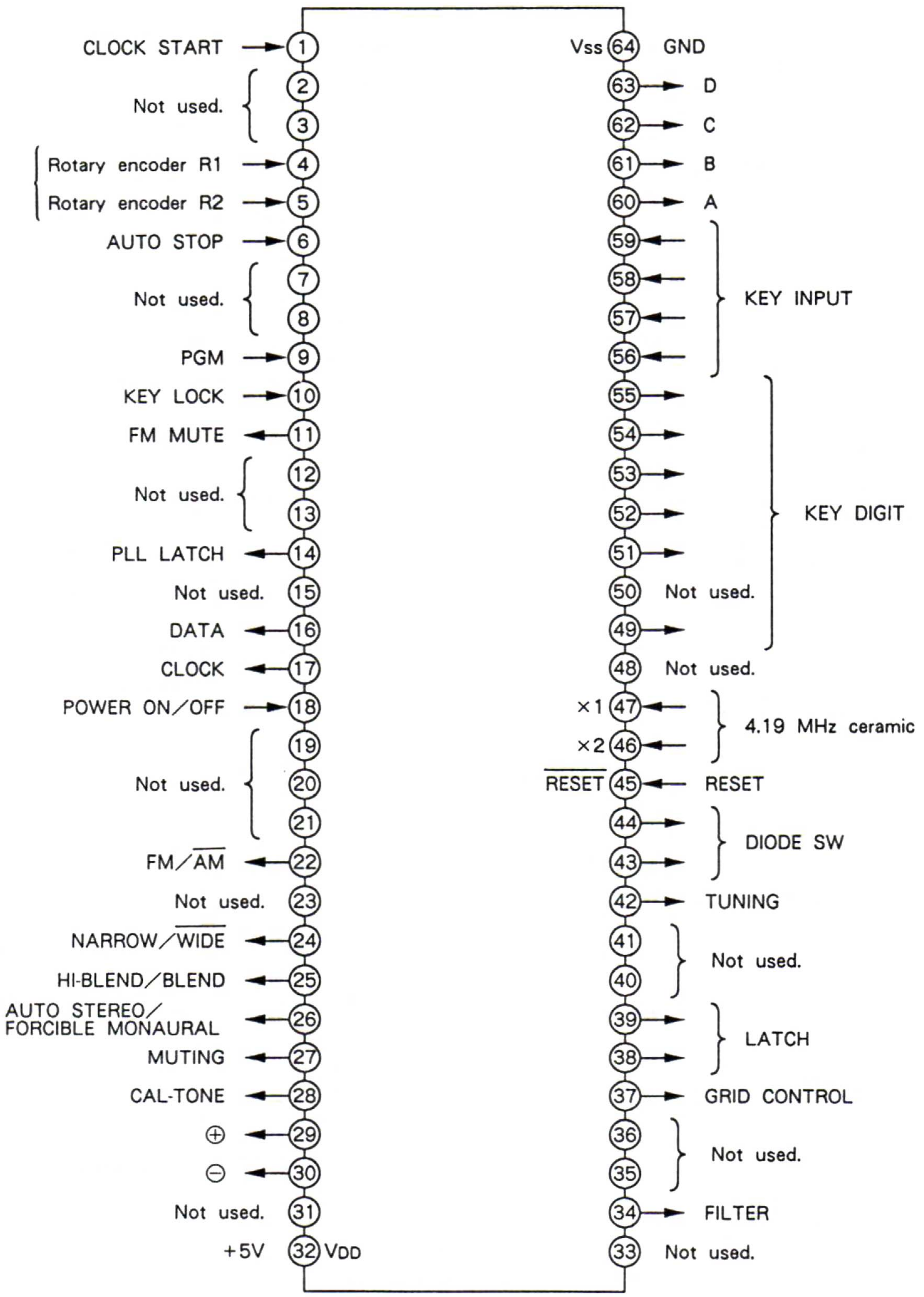

www.hifiengine.com

2-2. INPUT AND DISPLAY LIST OF IC601 (μPD75108CW-107)

2-2-1. Linked Key Input, Display, and Output ( ) : AEP, UK, WG, IT

21pin< > : AM/MW
[ ] : LW

Key name (SW ref.)	IC601			Display (FL701)		IC601 ㉑	Multiprocess memory		Remarks
	Function	Output pin		FM mode	AM/(MW/LW) mode	Muting output	FM mode	AM mode	
BAND (S721)	FM	22	21	FM	Goes off	H When selected	○	○	
		H	L						
	AM/(MW/LW)	L	<H> [L]	Goes off	AM/(MW/LW)				
IF BAND (S716)		24	23			H When selected	○	○	Mode is changed from WIDE to NARROW when diode SW I is selected.
	NARROW	H	L	NARROW	NARROW				
	WIDE	L	L	Goes off	Goes off				
FM MODE (S720)	AUTO STEREO	26	25	AUTO STEREO	Goes off	×	○	×	Varies depending on diode switch D622's status.
		H	H						
	HI-BLEND	H	L	HI-BLEND	Goes off				
	Forcible MONO	L	L	Forcible MONO	Goes off				
CAL-TONE (S715)	ON	28		CAL-TONE	CAL-TONE	H When selected	×	×	Turned off when power is turned off and a band select PGM SW is turned on or off.
		L							
	OFF	H		Goes off	Goes off				
MPX FILTER (S712)	OFF	34		Goes off	Goes off	H When selected	×	×	Memorized when power is turned off.
		H							
	ON	L		MPX FILTER	MPX FILTER				
SCAN MODE (S717)	PRESET	13		PRESET	PRESET	×	×	×	Memorized when power is turned off.
		H							
	TUNING	L		TUNING	TUNING				
TUNING MODE (S718)	AUTO	14		AUTO	Goes off	×	×	×	Memorized when power is turned off and goes off when a PGM SW is turned on.
		H							
	MANUAL	L		Goes off	Goes off				
FM MUTE (S719)	ON	11		MUTING	Goes off	×	○	×	L is output for other than FM.
		H							
	OFF	L		Goes off	Goes off	×			
Rotary encoder: TUNING dial	UP	30	29	Frequency UP control and its display		H When selected	×	×	13
		L	H						L
	DOWN	H	L	Frequency DOWN control and its display					
Rotary encoder: CHANNEL	UP	L	H	Preset UP and its display		H when data differs during selection.	×	×	H
	DOWN	H	L	Preset DOWN and its display					

www.hifiengine.com

2-2-2. Linked Key Input and Display

Key name (SW ref.)	Function	Display (LED)		IC601 ㉗	Multiprocess memory		Remarks
		FM mode	AM/(MW/LW) mode	Muting output	FM mode	AM/(MW/LW) mode	
PRESET CH. (S701−710)	1	1	1	H when data differs during selection.	○	○	
	2	2	2				
	3	3	3				
	4	4	4				
	5	5	5				
	6	6	6				
	7	7	7				
	8	8	8				
	9	9	9				
	10	10	10				
SHIFT (S711)	+10	+10	+10	H when data differs during selection.	○	○	The last channel is not changed.
	+20	+20	+20				
MEMORY (S713)	ON	MEMORY	MEMORY	×	×	×	Lights for 10 sec until other keys are searched. Goes off when preset within 10 sec.
	OFF	Goes off	Goes off				
PROGRAM CHECK (S714)	ON	Some of (1) turough (4) are preset channels. Flashes for 2 sec.		H when data differs during selection.	×	×	Accepted only when PGM SW is turned on. Other keys cannot be entered during check.
	OFF	——					

2-2-3. Linked Input Port and Display

Input name	Function	Pin No.	Display		Remarks
		Input	FM mode	AM/(MW/LW) mode	
PROGRAM SW (S601)	ON	9	Some of programs (1) through (4) are preset channels.		Key other than MEMORY, PGM CHECK, and CAL-TONE cannot be entered when PGM SW is turned on.
		L			
	OFF	H			
KEY LOCK SW (S601)	ON	10			No key inputs can be entered when KEY LOCK SW is turned on.
		L			
	OFF	H			

www.hifiengine.com

2-2-4. Output Only (IC601)

Name	Pin No. / Output	Description
GRID CONTROL	37 / H	Display is turned off for 0.5 sec after power is turned on.
	L	Display lights 0.5 sec after power is turned on.
MUTING	27 / H	Muted.
	L	Not muted.
TUNING	42 / H	Tuning stops.
	L	Tuning starts.

2-2-5. Dedicated Input Port (IC601)

Name	Port name (Pin No.)		Input	Signal	Description
POWER ON/OFF	INT4 (18)		H		• Power is turned off. Set to the status befor the STOP mode is entered by detecting the leading edge. For out-of-coincidence, initialize using RAM JUDGE.
			L		• Power is turned off. Stopped after an input and output port is set so that the current consumption is minimized by detecting the trailing edge.
CLOCK START	INT3 (1)		H		1. The STOP mode is canceled at the leading edge. 2. The pressed key is then entered.
			L	10 sec L	• The STOP mode is entered when this input remains low for 10 sec.
Rotary encoder	R1	INT0 (4)			1. The STOP mode is canceled at the initial leading edge. 2. Counted from the leading edge after 10 msec. 3. The STOP mode is entered when there is no input for 10 sec.
	R2	PTH03 (5)			• Judges whether the encoder rotates clockwise or counter-clockwise according to the phase difference between R1 and R2.
AUTO STOP	PTH02 (6)		L		• Tuning is stopped when a designated STOP signal is input in the AUTO TUN mode.
			H		• The next-stage PLL is set when the signal is low in the AUTO TUN mode.

www.hifiengine.com

SECTION 3
ELECTRICAL ADJUSTMENTS

- Parts location diagram relevant to the adjustment.

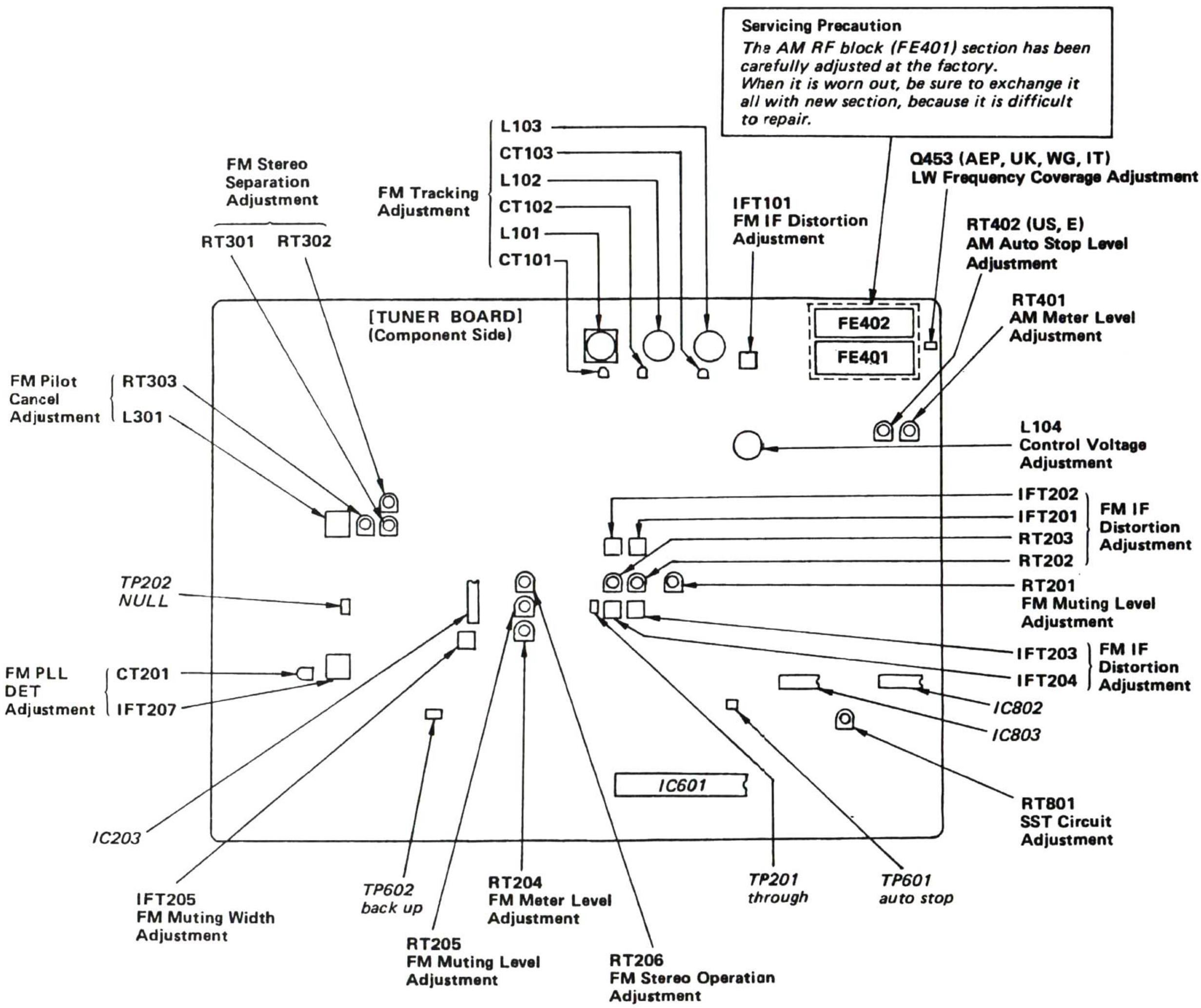

3-1. FM SECTION (1)

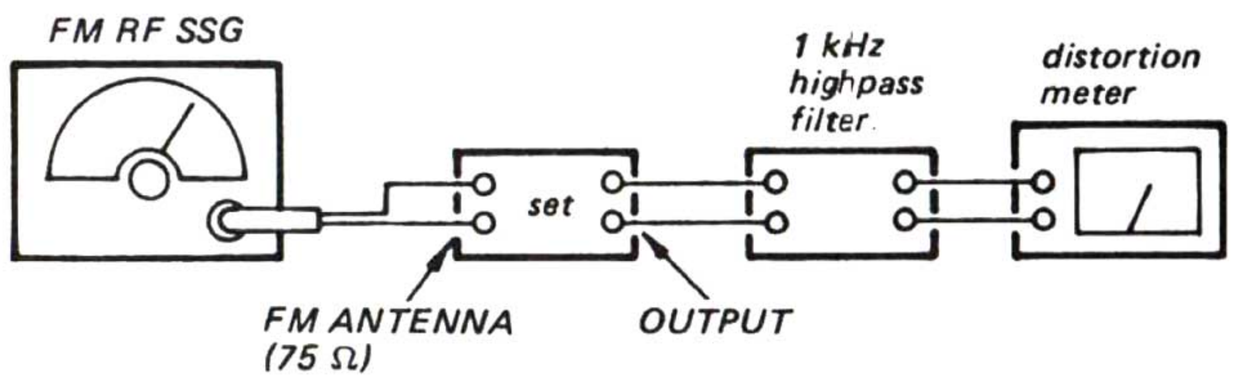

- **Standard signals for adjustment.**

FM RF Stereo Signal	FM RF Monaural Signal
Carrier frequency: 98 MHz *Modulation: Audio 400 Hz, 33.75 kHz deviation (45%)* *(US, E) Subchannel 33.75 kHz deviation (45%)* *Pilot 19 kHz, 7.5 kHz deviation (10%)*	*Carrier frequency: 98 MHz* *Modulation: 400 Hz, 75 kHz deviation (100%)* *(US, E)*
Modulation: Audio 400 Hz, 16.25 kHz deviation (40%) *(AEP, UK, WG, IT) Subchannel 16.25 kHz deviation (40%)* *Pilot 19 kHz, 7.5 kHz deviation (10%)*	*Modulation: 400 Hz, 40 kHz deviation (100%)* *(AEP, UK, WG, IT)*

www.hifiengine.com

3-1-1. PLL Detect Adjustment

Setting:

IF BAND: WIDE
MUTING/MODE switch: OFF

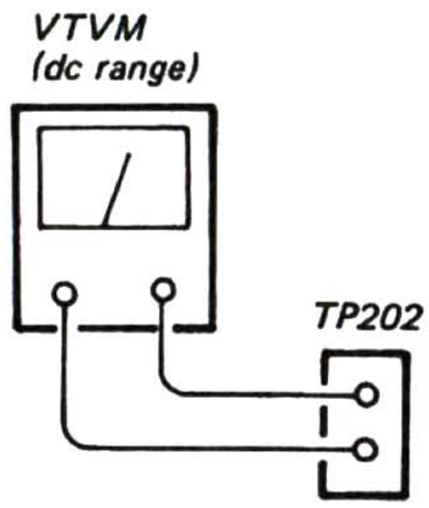

Procedure:

1. Tune the set to 98 MHz.
2. Short-circuit TP201 to the ground.
3. Set the SSG output to 80 dB (10 mV).
4. Adjust IFT207 for 0 V reading on the VTVM (TP202).
5. Adjust CT201 for minimum distortion reading on the distortion meter.
6. Repeat the step 4 and 5 several times.
7. Remove the short circuit of TP201.

3-1-2. Muting Width Adjustment

Setting:

IF BAND: WIDE
MUTING/MODE switch: ON

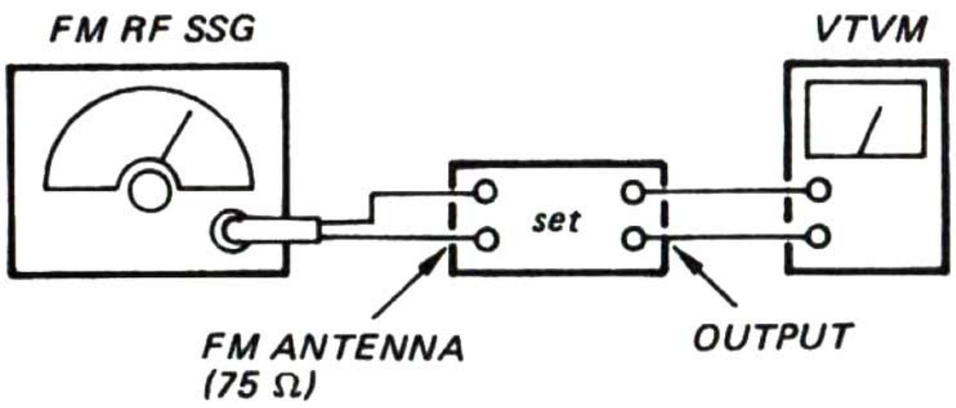

Carrier frequency: 98 MHz ±50 kHz
Modulation: FM RF Monaural signal
Output level: 10 mV (80 dB)

Procedure:

1. Tune the set to 98 MHz.
2. Increase the frequency of FM RF SSG 50 kHz more than that of the receiving frequency and adjust IFT205.
3. Decrease the frequency of FM RF SSG 50 kHz less than the receiving frequency and make sure to obtain output.
4. Repeat step the above 1 and 2, then adjust IFT205 to obtain output when increasing or decreasing the frequency of FM RF SSG by the same amount.

3-1-3. FM Meter Level Adjustment

Setting:

IF BAND: WIDE

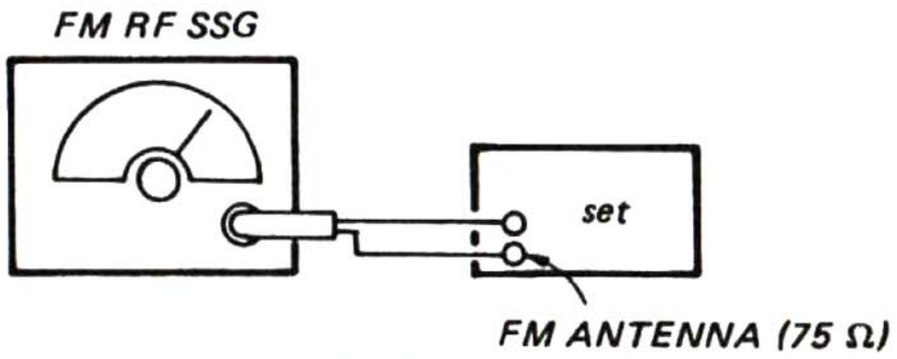

Carrier frequency: 98 MHz
Modulation: FM RF Monaural signal
Output level: 315 μV (50 dB)

Procedure:

1. Tune the set to 98 MHz.
2. Adjust RT204 so that 1–10 indication bars light up on the signal meter.

3-1-4. FM Muting Level Adjustment

Setting:

IF BAND: WIDE

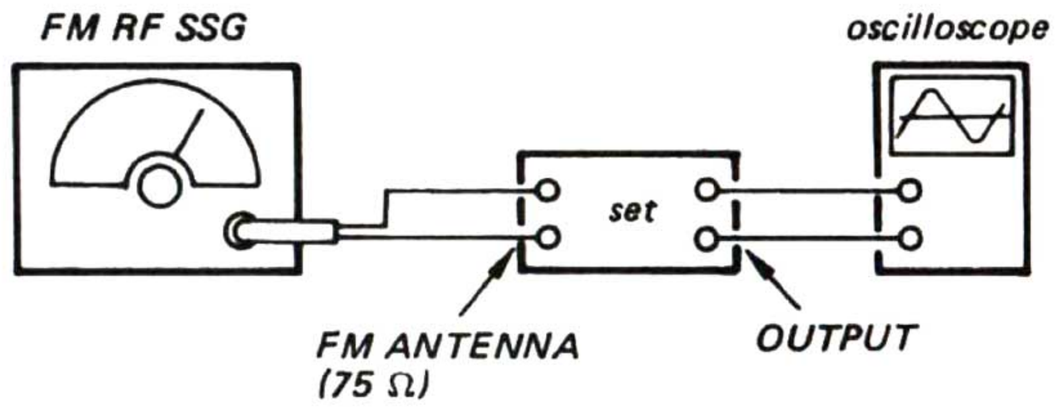

FM RF Monaural signal
Output level: 12.6 μV (22 dB)

Procedure:

1. Mode: MUTING ON
2. Tune the set to 98 MHz and adjust output level of signal generator at 22 dB (12.6 μV).
3. Turn RT205 (WIDE) at the position where the waveform suddenly appears on the oscilloscope.
4. Mode: MUTING OFF
5. Turn RT201 (NARROW) at the position where the waveform suddenly appears on the oscilloscope.

3-1-5. IF Distortion Adjustment

Setting:

IF BAND: WIDE
MUTING/MODE switch: OFF

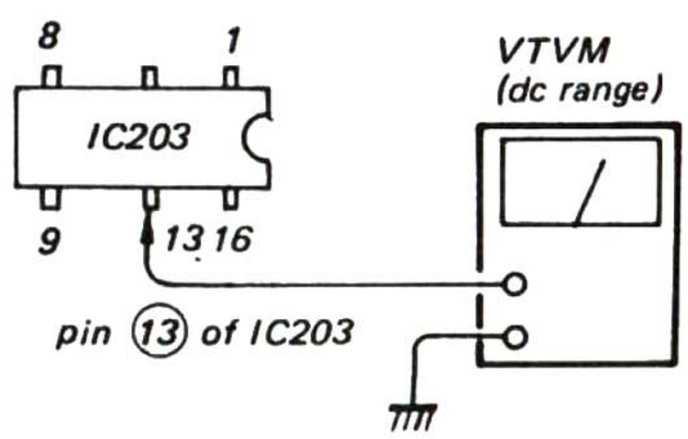

Procedure:

1. Tune the set to 98 MHz.
2. Turn RT202 and RT203 fully clockwise.
3. Set the SSG (monaural) output to the weak input (about 20 dB (μV)) and turn off the MUTING/MODE switch. Then adjust IFT201 for maximum reading on the VTVM.
4. Adjust IFT101 for maximum reading on the VTVM.
5. Set the SSG output to 80 dB (μV).
6. Adjust IFT203 and RT202 alternately for the minimum distortion.
7. Set the SSG output to the weak input (about 20 dB (μV) and turn on the MUTING/MODE switch.
   Then adjust IFT202 for maximum reading on the VTVM.
8. Set the SSG output to 80 dB (μV) at stereo modulation mode.
9. Adjust IFT204, RT203 alternately for the minimum distortion.

www.hifiengine.com

3-1-6. Stereo Operation Adjustment

Setting:

IF BAND: WIDE
MUTING/MODE switch: OFF

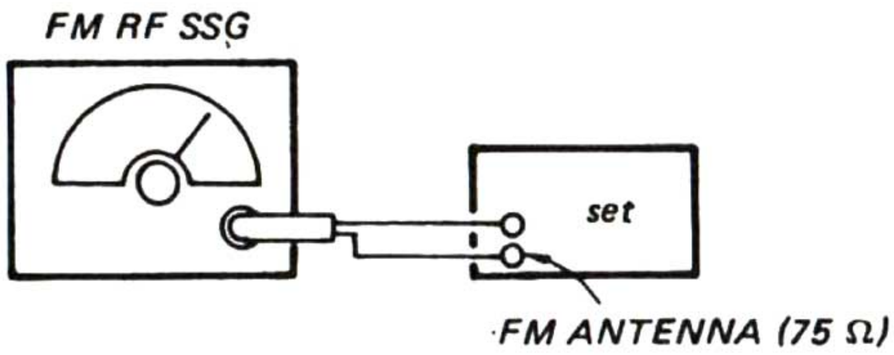

Carrier frequency: *98 MHz*
Modulation: *FM RF Stereo signal*
Output level: *10 μV (20 dB)*

Procedure:

1. Tune the set to 98 MHz.
2. Adjust RT206 so that the STEREO indicator goes on.

3-1-7. Stereo Separation Adjustment

Setting:

IF BAND: WIDE

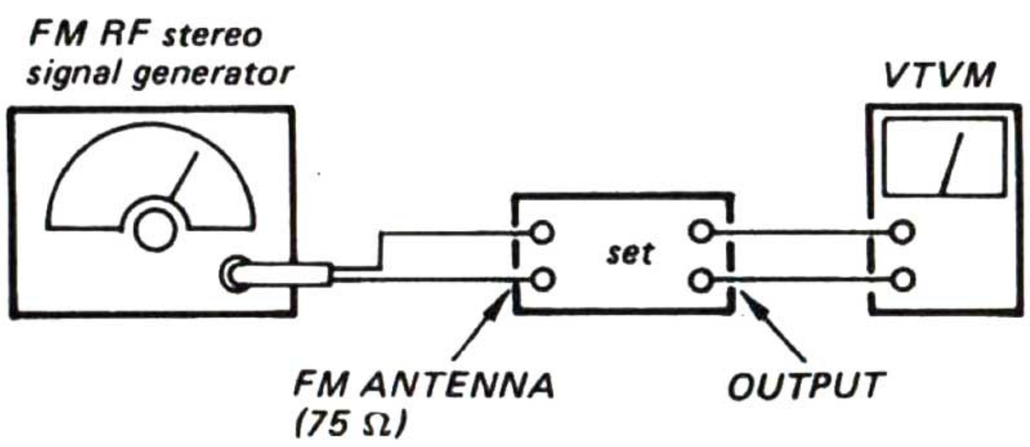

FM rf stereo signal
Carrier frequency: *98 MHz*
Output level: *1 mV (60 dB)*
Mode: *Stereo*

Procedure:

FM stereo signal generator output channel	VTVM connection	VTVM reading (dB)
L-CH	L-CH	Ⓐ
R-CH	L-CH	Ⓑ Adjust RT301 for minimum reading.
R-CH	R-CH	Ⓒ
L-CH	R-CH	Ⓓ Adjust RT302 for minimum reading.

L-CH Stereo separation: Ⓐ – Ⓑ
R-CH Stereo separation: Ⓒ – Ⓓ
The separations of both channels should be equal.

3-2. FM SECTION (2)

3-2-1. Control Voltage Adjustment

Procedure:

1. Turn the set to 108 MHz.
2. Adjust L104 for 21.0 ±0.2 V reading on the VTVM.
3. Tune the set to 87.5 MHz.
4. Confirm that the voltage reading on the VTVM is within 8.0 ±1.0 V.

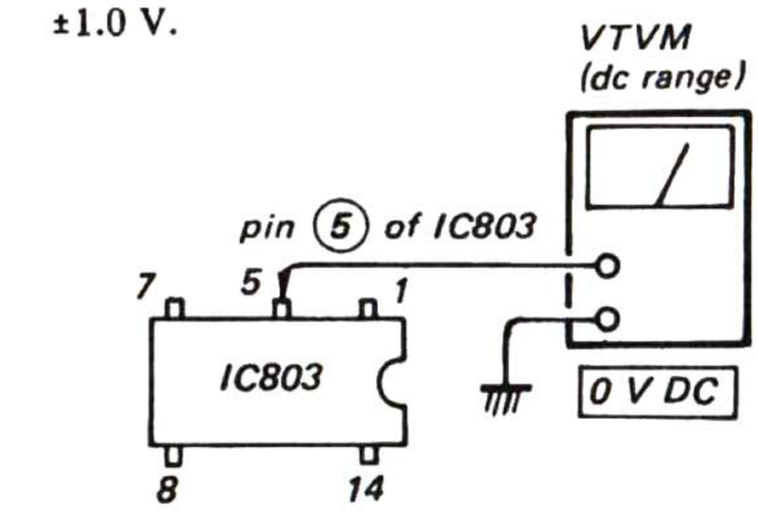

3-2-2. SST Circuit Adjustment

Note: The adjustment of the SST circuit must be done after the Control Voltage has been adjusted, and yet, before Starting the Tracking adjustment.

Procedure:

1. Tune the set to 87.5 MHz.
2. Adjust RT801 for "L" at pin 11 of IC802.
3. Tune the set to 108 MHz.
4. Confirm that the "H" pin 9 of IC802.

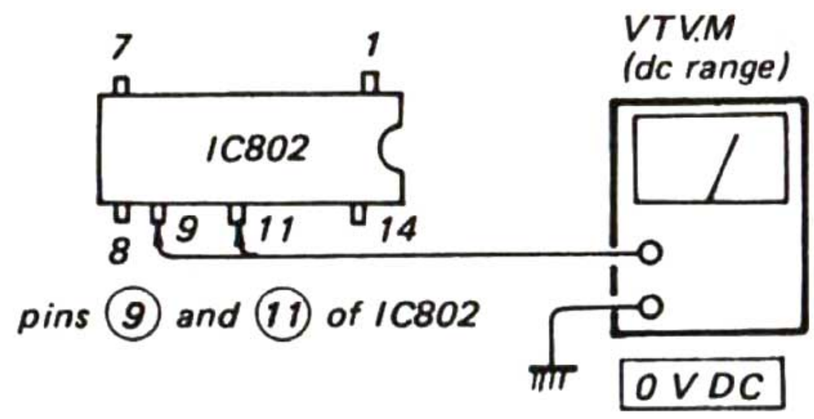

3-2-3. Pilot Cancell Adjustment

Setting:

MPX FILTER: ON

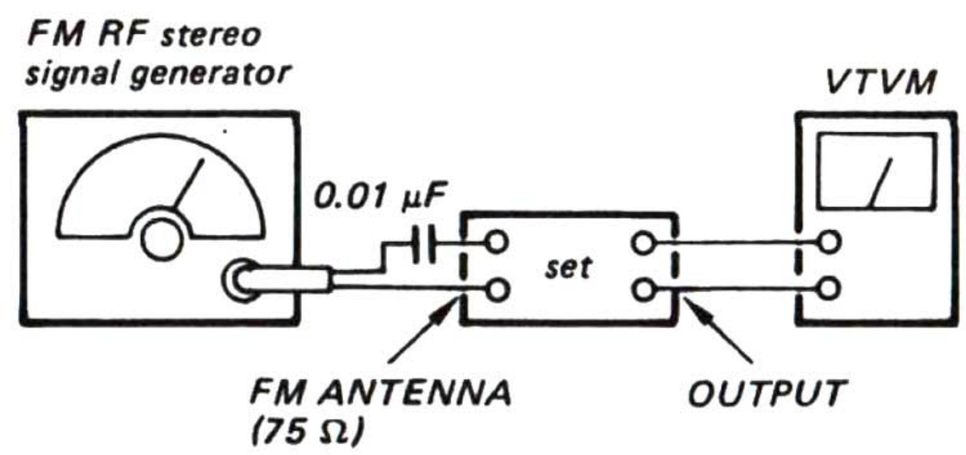

Carrier frequency: *98 MHz*
Modulation: *pilot only*
Output level: *10 mV (80 dB)*

Procedure:

1. Turn the set to 98 MHz.
2. Adjust RT303 and L301 for minimum reading on the VTVM and also tune the both channel of L-CH and R-CH balanced at this time.

www.hifiengine.com

3-2-4. Tracking Adjustment

Setting:

IF BAND: NARROW

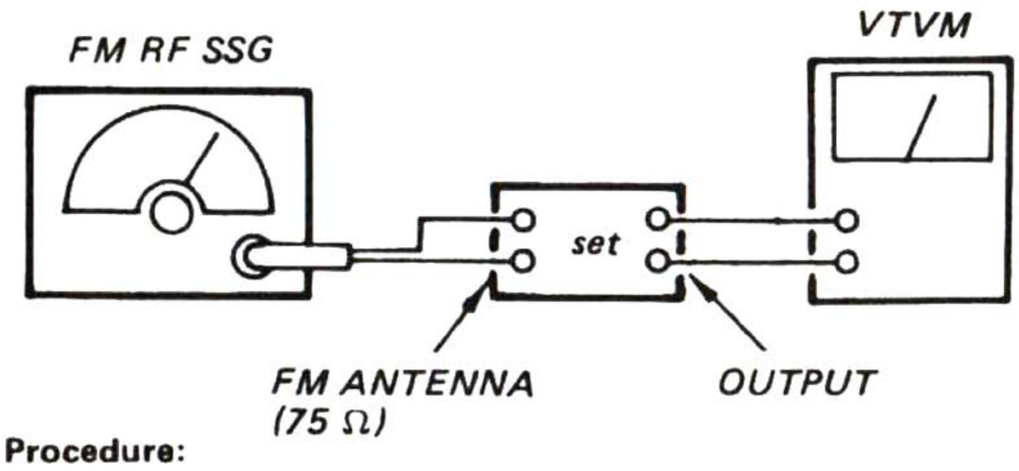

Procedure:

1. Tune the set to 108 MHz.
2. Adjust CT101, CT102 and CT103 for maximum reading on the VTVM.
3. Tune the set to 87.5 MHz.
4. Adjust L101, L102 and L103 for maximum reading on the VTVM.

3-3. AM SECTION

Setting:

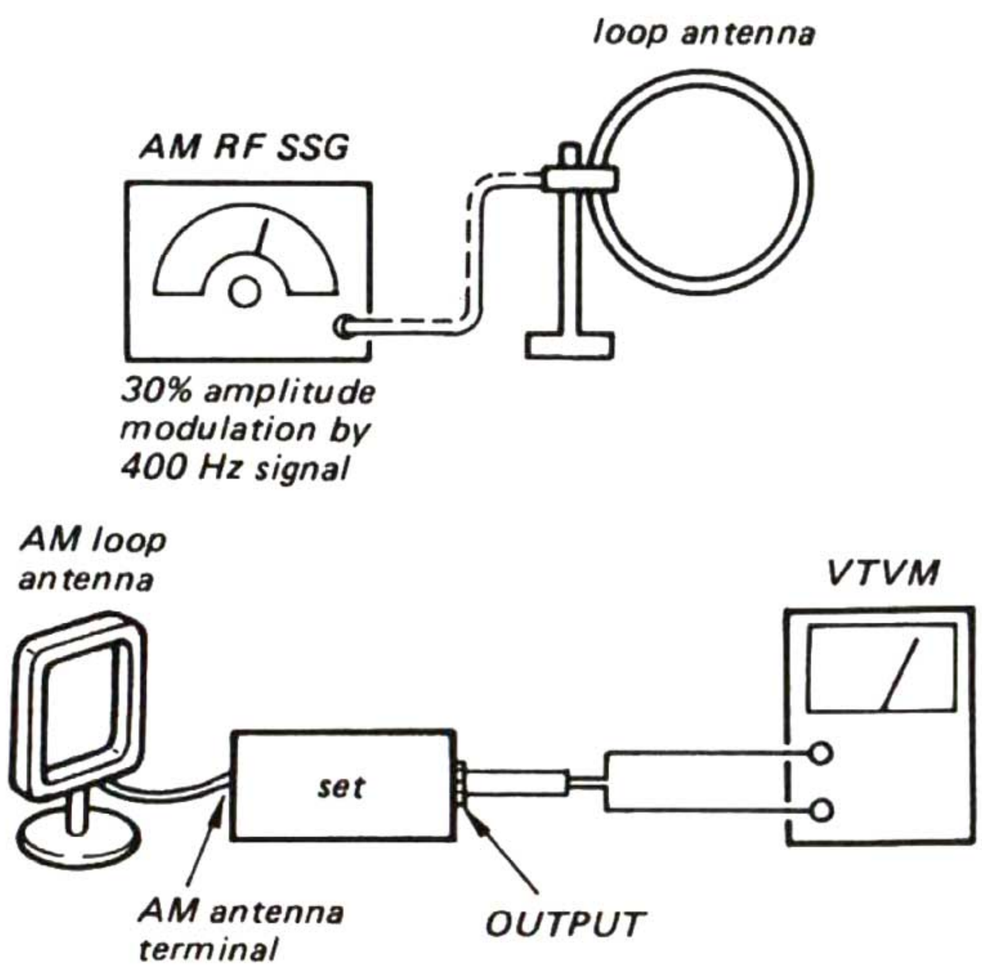

3-3-1. AM/(MW/LW) Meter Level Adjustment

Setting:

Carrier frequency: *999 kHz*
Modulation: *400 Hz, 30% modulation*

Procedure:

1. Set AM RF signal generator so that the AM antenna input level becomes 64 dB (μV/m).
2. Adjust RT401 so that 1–10 indication bars light up on the signal meter.

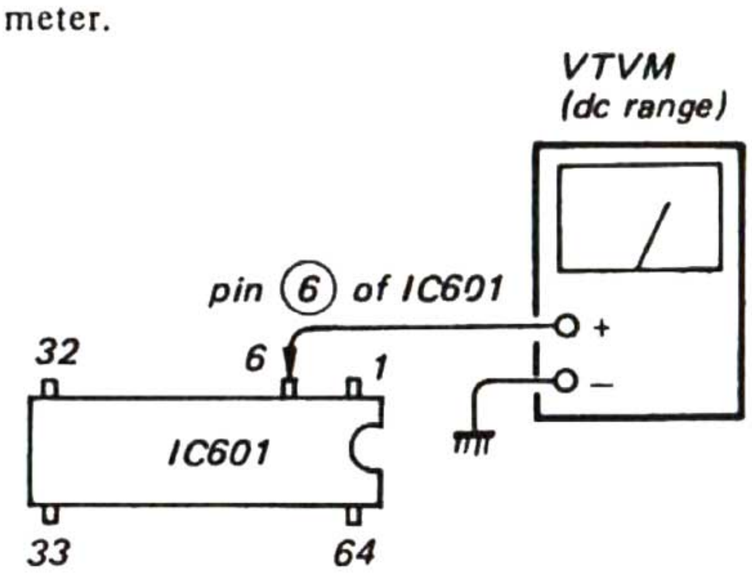

3-3-2. AM Auto Stop Level Adjustment (US, E)

Setting:

Carrier frequency : *999 kHz*
Modulation : *400Hz, 30% modulation*

Procedure:

1. Set AM RF signal generator so that the AM antenna input level becomes 53 dB (μV/m).
2. Adjust RT402 for 2.5 V reading on the VTVM.
3. Repeat the step from 1 to 4 several times.

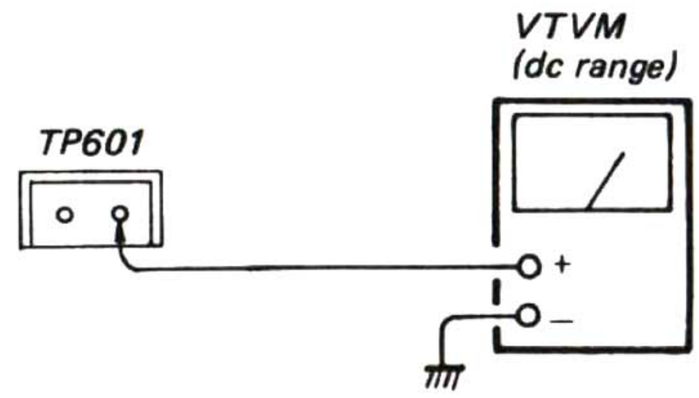

3-3-3. AM/MW Frequency Coverage Adjustment

Procedure:

Frequency display	Reading on the VTVM
1,610 kHz	22 ±0.2 V
530 kHz	1.8 ±0.1 V

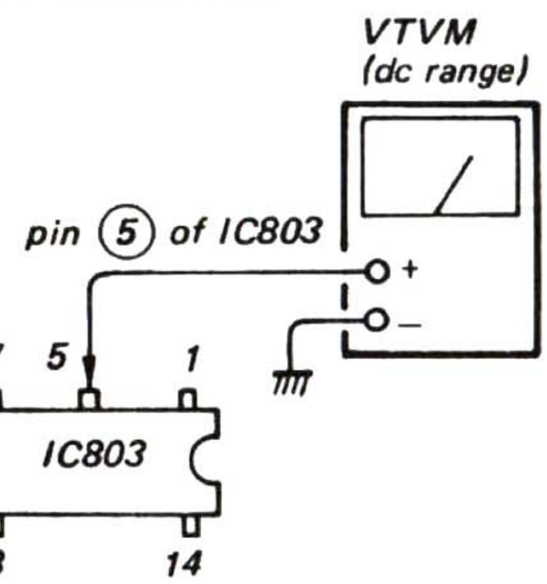

3-3-4. LW Frequency Coverage Adjustment

Procedure:

Frequency display	Reading on the VTVM
288kHz	13.5±2.0V
144kHz	1.6±0.1V

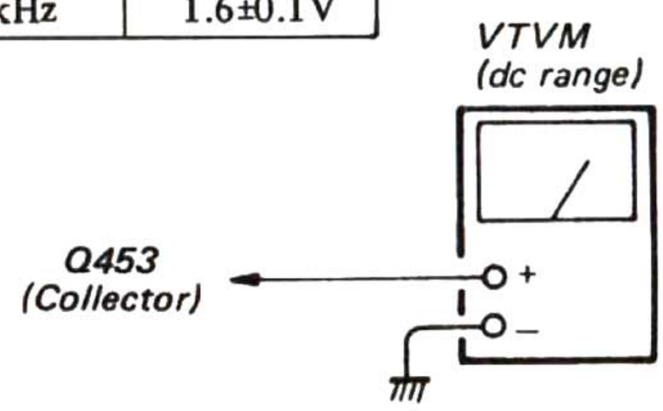

www.hifiengine.com

SECTION 4
DIAGRAMS

4-1. PRINTED WIRING BOARDS

● See page 23 for Semiconductor Lead Layouts.

● Semiconductor Location

Ref. No.	Location	Ref. No.	Location	Ref. No.	Location
D101	B-20	D712	I-8	Q213	D-19
D102	B-19	D713	I-9	Q214	E-19
D103	B-18	D714	I-9	Q215	D-19
D104	D-18	D715	I-8	Q216	D-19
D105	E-18	D716	H-8	Q217	G-20
D201	C-19	D717	H-9	Q218	G-23
D202	D-19	D718	I-2	Q219	F-24
D203	F-20	D719	I-9	Q220	G-25
D204	G-24	D720	I-8	Q221	G-21
D205	G-24	D721	I-2	Q222	H-18
D206	F-25	D801	G-15	Q223	F-21
D207	F-25	D901	C-23	Q301	D-25
D208	G-25	D902	C-23	Q303	D-25
D301	C-25	D903	B-23	Q304	E-25
D302	D-25	D904	B-23	Q305	C-25
D304	E-25	D905	C-22	Q306	C-26
D305	E-25	D906	C-22	Q307	D-26
D306	C-25	D907	C-23	Q308	D-26
D307	C-26	D908	C-22	Q309	H-25
D309	H-25	D909	C-23	Q310	E-26
D310	D-25	D910	A-23	Q401	B-16
D510	F-18	D911	D-21	Q402	E-16
D601	I-17	D912	D-22	Q403	E-16
D602	I-16	D913	I-24	Q404	E-16
D603	I-16	D914	H-25	Q405	E-16
D604	I-16	D915	H-25	Q406	E-24
D605	H-20	D916	H-25	Q407	D-17
D606	H-21	D917	H-24	Q408	D-15
D607	H-22	D918	H-25	Q451	B-17
D608	I-22			Q452	B-16
D609	I-16	IC201	C-20	Q453	B-15
D610	I-16	IC202	D-20	Q454	B-17
D611	I-16	IC203	F-22	Q455	B-17
D612	I-16	IC204	F-23	Q456	B-15
D613	I-17	IC205	F-24	Q457	B-15
D614	I-17	IC301	C-24	Q458	B-15
D615	I-17	IC302	A-25	Q501	F-16
D616	I-17	IC401	D-16	Q502	F-16
D617	I-17	IC501	E-18	Q503	G-16
D618	I-17	IC601	I-19	Q504	F-18
D620	I-16	IC602	H-19	Q551	F-15
D622	I-16	IC670	E-9	Q552	F-15
D623	I-16	IC701	I-5	Q601	I-22
D625	I-15	IC702	I-3	Q602	I-23
D626	I-15	IC703	I-7	Q605	G-18
D627	H-23	IC704	I-7	Q606	G-18
D628	G-18	IC705	I-12	Q607	I-23
D629	G-18	IC801	H-16	Q608	I-24
D630	H-23	IC802	G-15	Q609	H-15
D631	H-17	IC803	G-17	Q610	H-22
D632	H-21	IC901	I-25	Q611	H-23
D634	H-21			Q612	G-18
D635	H-21	Q101	B-20	Q613	H-22
D636	G-21	Q102	A-18	Q614	J-19
D637	H-21	Q103	D-18	Q615	H-19
D638	I-15	Q104	C-18	Q670	D-10
D639	I-24	Q105	D-18	Q701	I-9
D650	E-12	Q106	E-18	Q702	I-8
D670	D-9	Q201	C-19	Q703	H-2
D701	I-10	Q202	D-20	Q801	H-20
D702	I-11	Q203	E-19	Q901	D-22
D703	I-11	Q204	F-19	Q902	D-21
D704	I-12	Q205	E-20	Q903	D-22
D705	I-13	Q206	G-20	Q904	I-24
D706	H-10	Q207	E-19		
D707	H-11	Q208	F-19		
D708	H-11	Q209	G-19		
D709	H-12	Q210	G-20		
D710	H-13	Q211	F-21		
D711	H-2	Q212	D-19		

Note:

- ○—— : parts extracted from the component side.
- ⊡ indicates side identified with part number.
- ▒ : Pattern on the side which is seen.

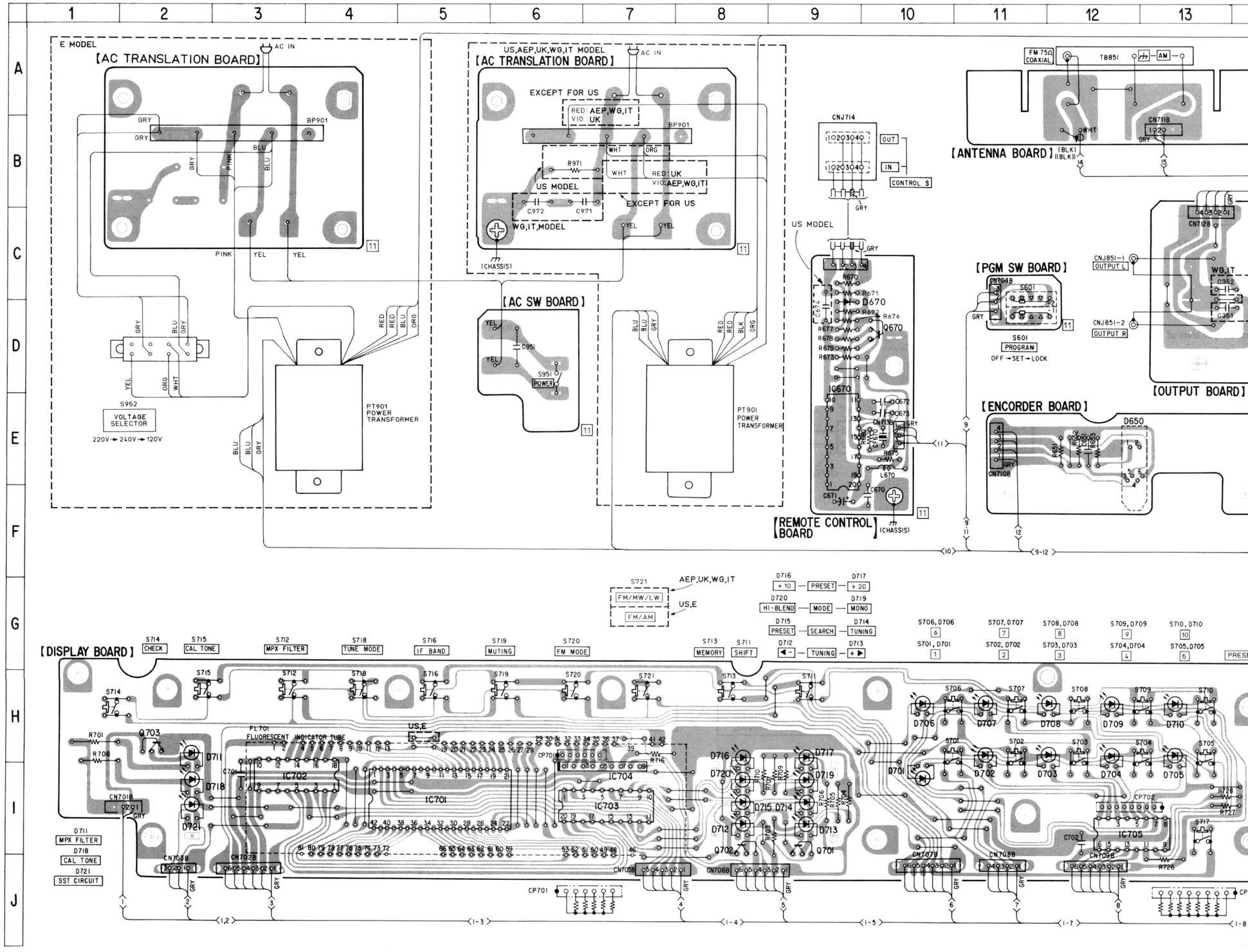

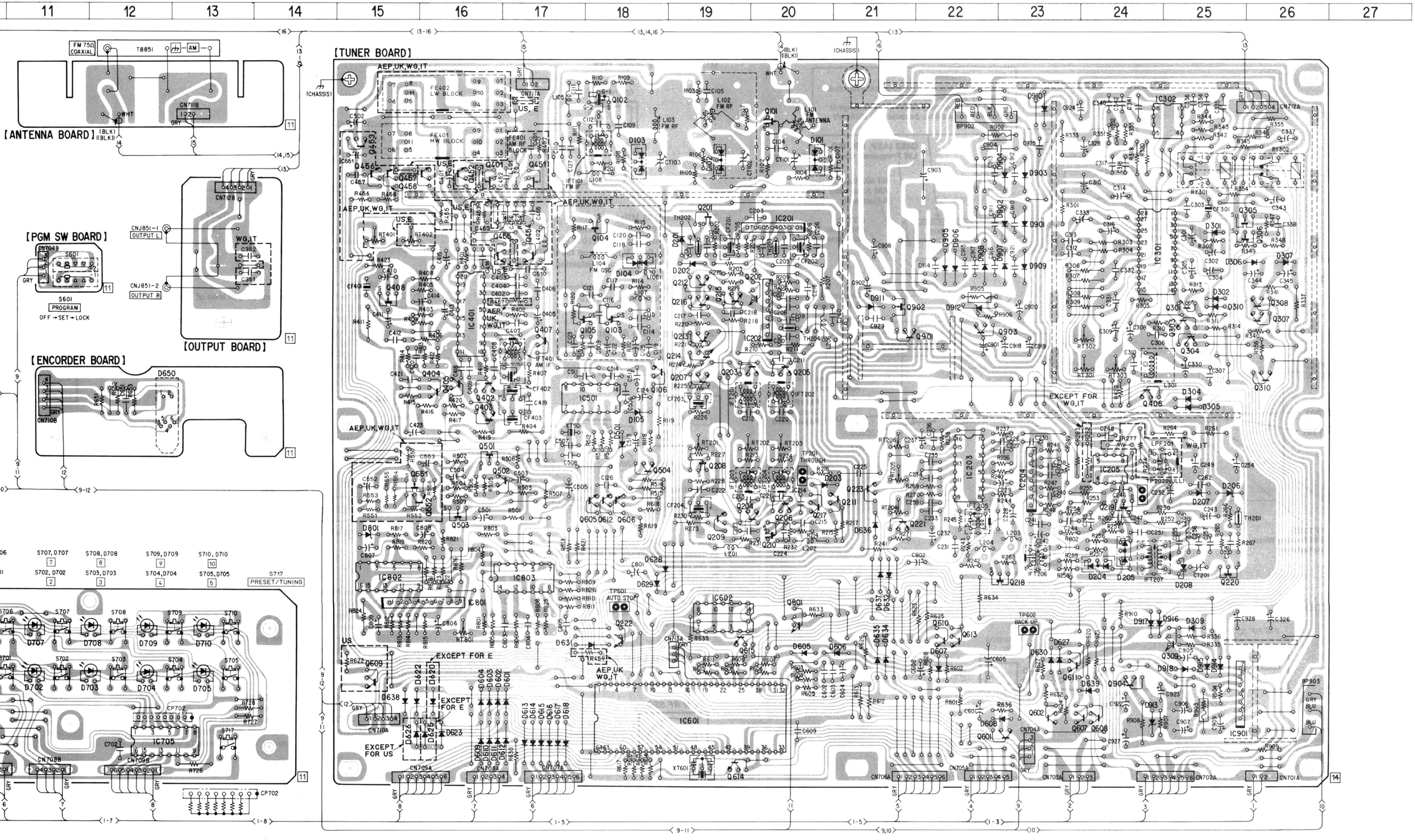
11
12
13
14
15
16
17
18
19
20
21
22
23
24
25
26
27
[ANTENNA BOARD]
FM 75Ω COAXIAL
T8851
AM
CN711B
WHT
GRY
[PGM SW BOARD]
CN704B
S601
S601
PROGRAM
OFF → SET → LOCK
CNJ851-1
OUTPUT L
CNJ851-2
OUTPUT R
CN712B
WG,IT
[OUTPUT BOARD]
[ENCORDER BOARD]
D650
CN710B
S707, D707
S708, D708
S709, D709
S710, D710
S702, D702
S703, D703
S704, D704
S705, D705
S717
PRESET/TUNING
CN708B
CN709B
IC705
CP702
[TUNER BOARD]
(CHASSIS)
AEP,UK,WG,IT
FE402 LW BLOCK
FE401 MW BLOCK
US,E
CN711A
CN712A
L102 FM RF
L103 FM RF
L101 FM ANTENNA
IC302
IC301
IC201
IC202
IC501
IC401
IC601
IC602
IC603
IC604
IC605
IC802
IC803
IC801
IC901
EXCEPT FOR WG,IT
EXCEPT FOR E
EXCEPT FOR US
TP601 AUTO STOP
TP602 BACK UP
TP201 THROUGH
TP2020(NULL)
BP902
BP903
CN713A
CN704A
CN706A
CN705A
CN703A
CN702A
CN701A
CN710A
CN709A
CN708A
CN707A

4-2. SCHEMATIC DIAGRAM

- See page 20 for notes and IC Block Diagrams.
- See page 22 for Waveforms.

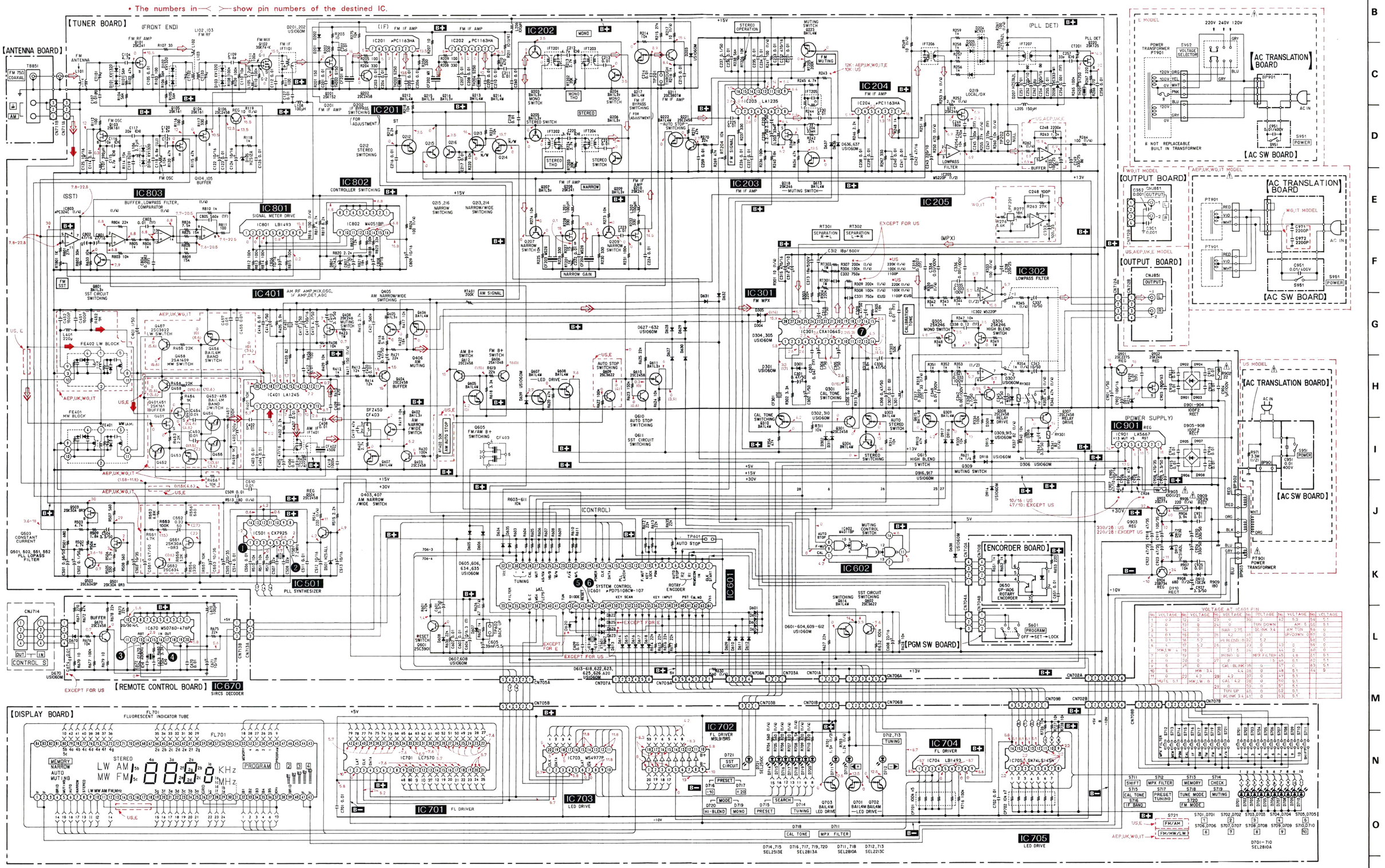

4-3. IC BLOCK DIAGRAMS

Note:

- All capacitors are in μF unless otherwise noted. pF: μμF 50WV or less are not indicated except for electrolytics and tantalums.
- All resistors are in Ω and 1/4 W or less unless otherwise specified.
- △ : internal component.
- : fusible resistor.
- : adjustment for repair.
- Voltages are taken with a VOM (50 kΩ/V). Voltage variations may be noted due to normal production tolerances.
- Waveforms are taken with a oscilloscope. Voltage variations may be noted due to normal production tolerances.
- Circled numbers refer to waveforms.
- Signal path.
  - : FM
  - : LW
  - : AM

Note:	Note:
The components identified by mark ⚠ or dotted line with mark ⚠ are critical for safety. Replace only with part number specified.	Les composants identifiés par une marque ⚠ sont critiques pour la sécurité. Ne les remplacer que par une pièce portant le numéro spécifié.

- Voltage are dc with respect to ground under no-signal (detuned) condition.
  no mark: FM
  ( ) : AM/MW
  < > : LW

IC201, 202, 204 μPC1163HA

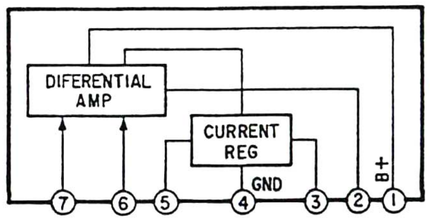

IC401 LA1245

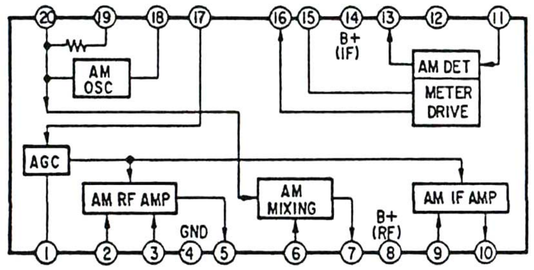

IC701 LC7570

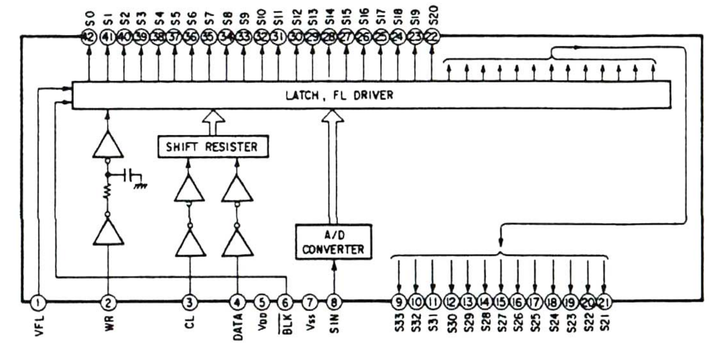

IC203 LA1235

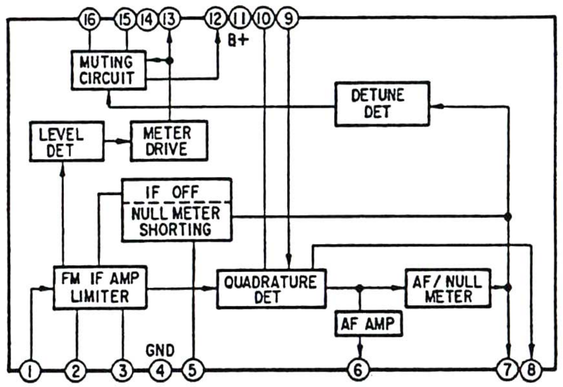

IC501 CX7925B

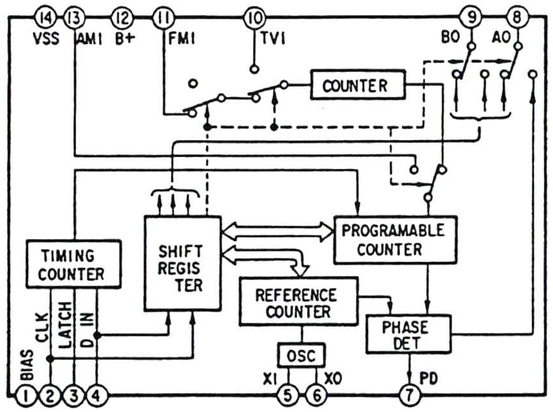

IC301 CXA1064S

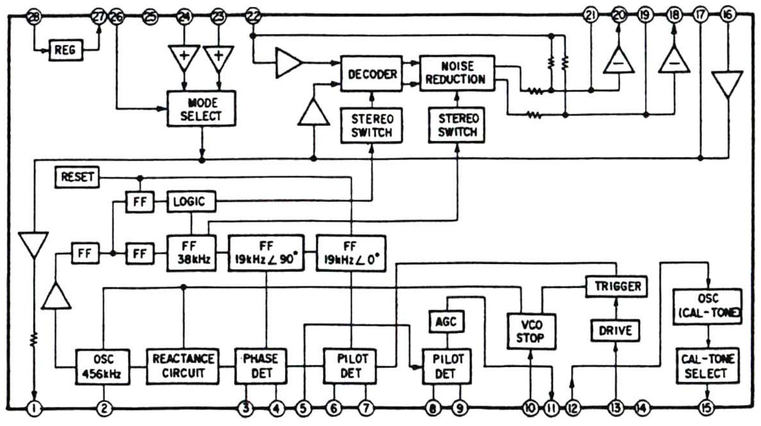

IC703 M54977P

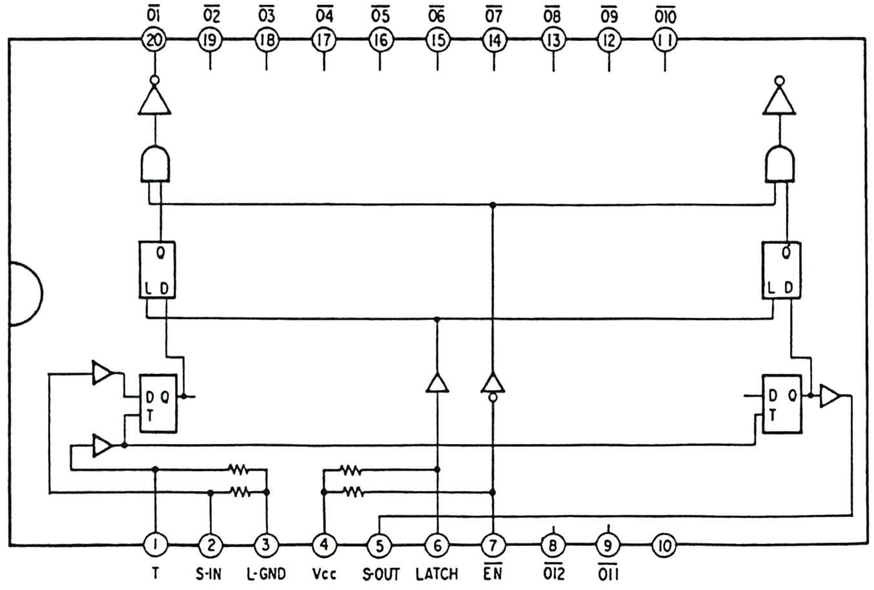

IC704 LB1493

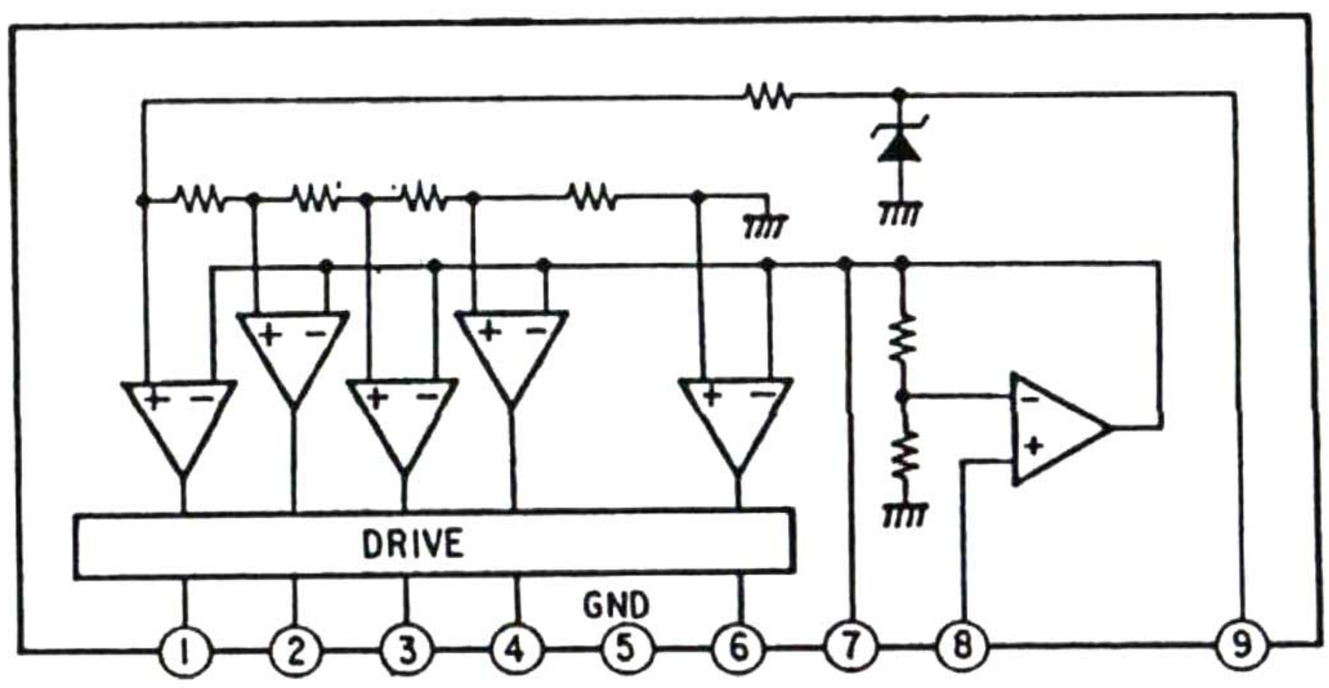

IC705 SN74LS145N

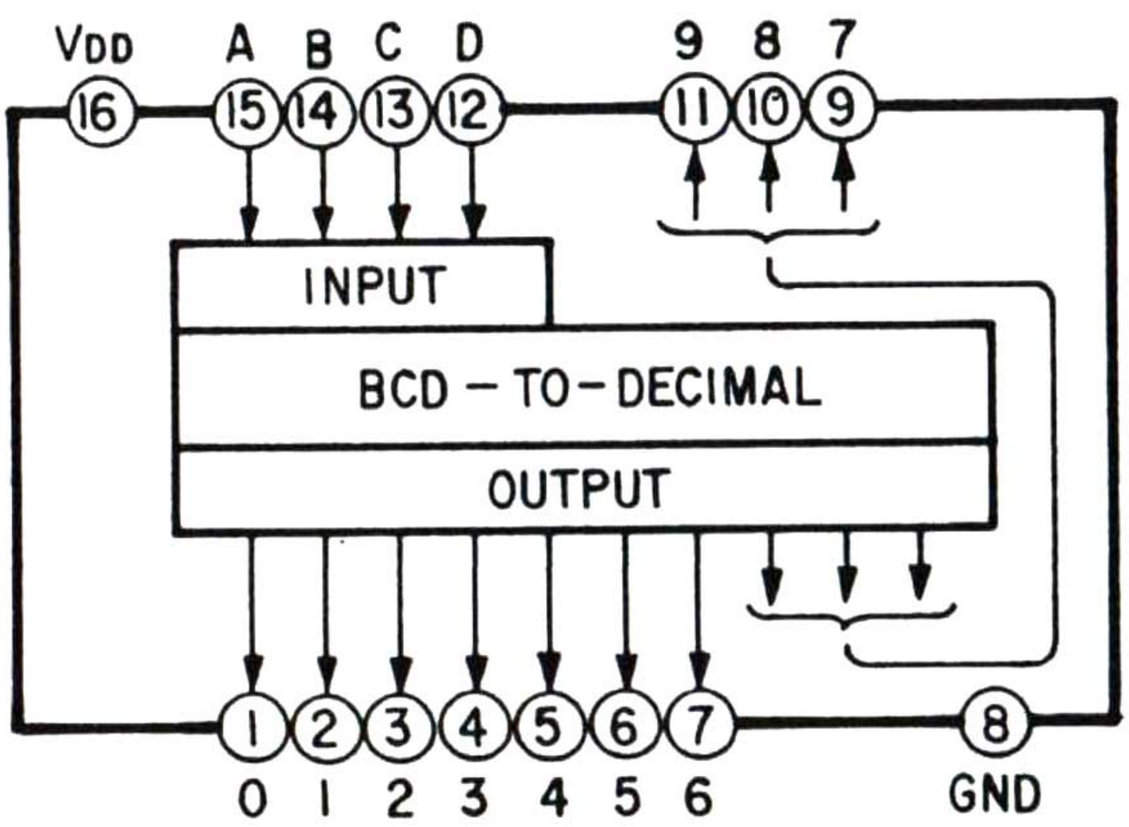

IC802 M4051BP

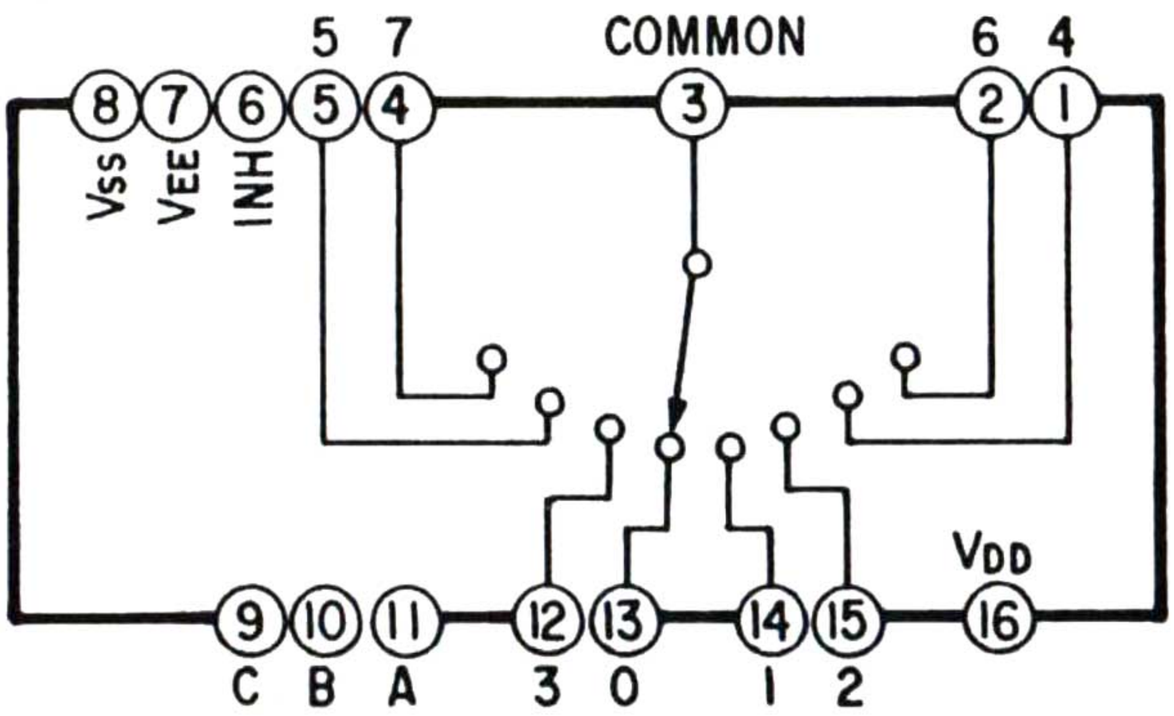

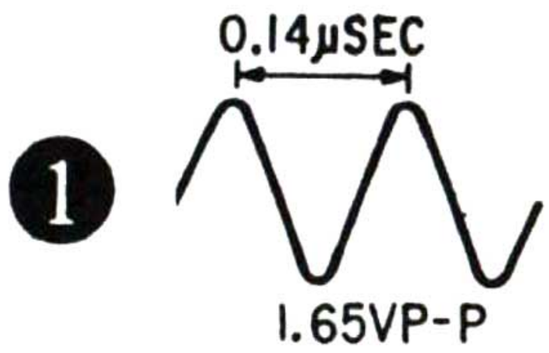

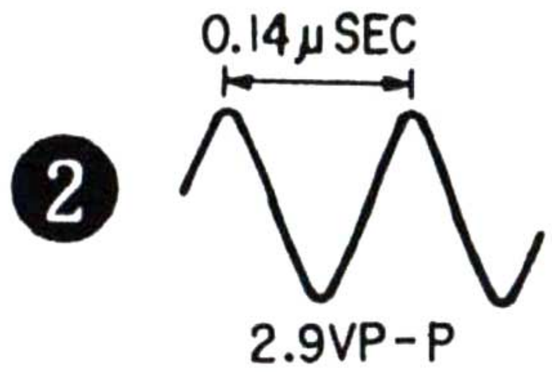

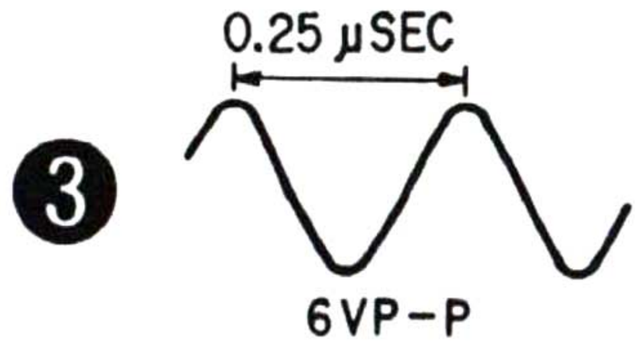

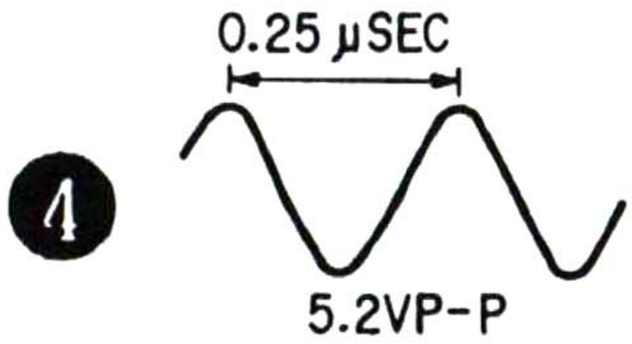

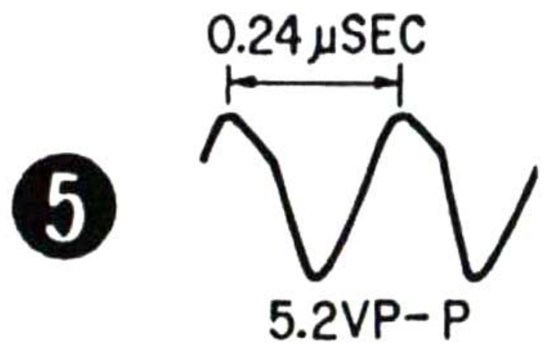

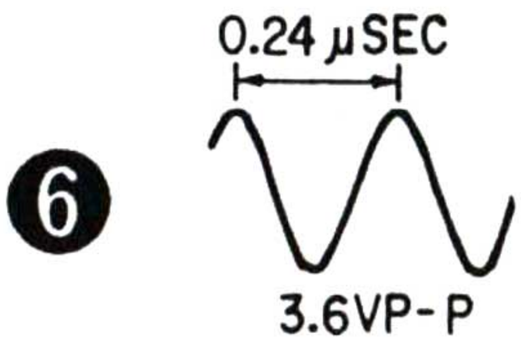

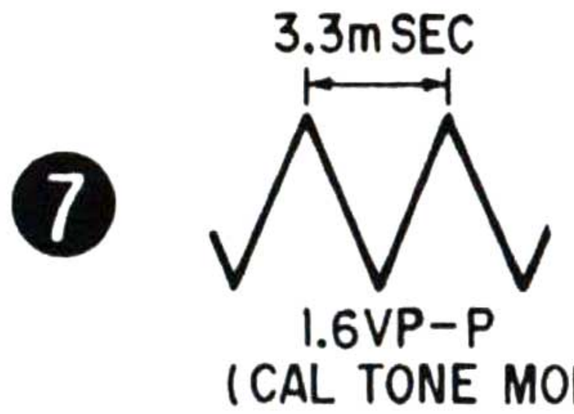

www.hifiengine.com

4-5. SEMICONDUCTOR LEAD LAYOUTS

CXA1064S

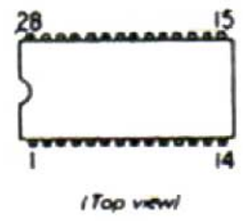

CX7925B
M4011BP
μPC324C

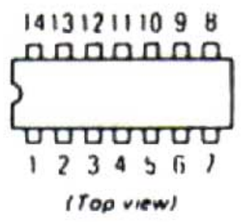

LA1235
SN74LS145N
TC4051BP

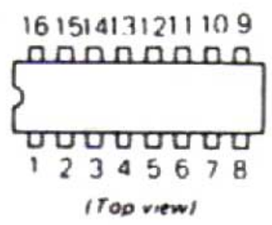

LA1245
M54977P
M50760-SOX437A

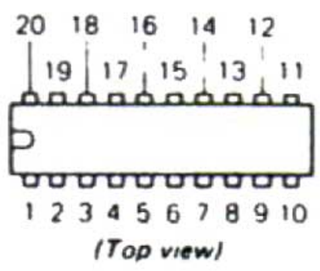

LA5667

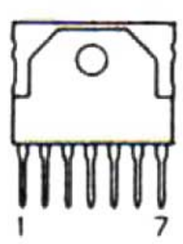

LB1493

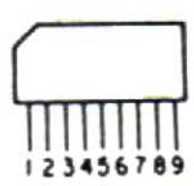

LC7570

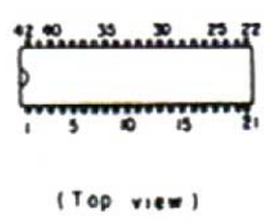

MSL915RS

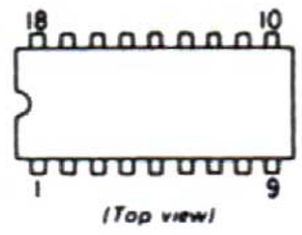

M5220P

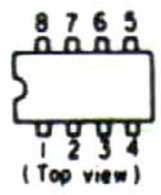

μPC1163HA

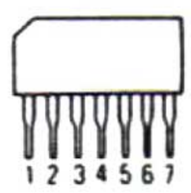

μPD75108CW-107

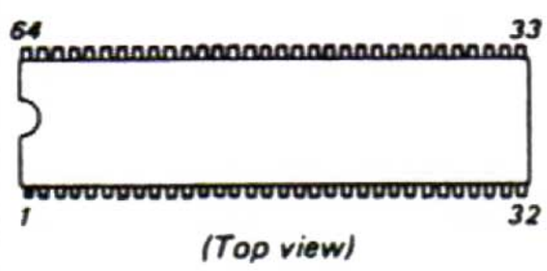

DTA144ES
DTC144ES
2SC634SP
2SC3901

2SA1175
2SC2785

2SA1409-L
2SC380TM-Y
2SC3622AL

2SB734
2SD774

2SC2275A

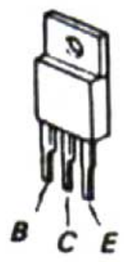

2SK30AGR33
2SK125-3
2SK246GR2

2SK152-3

2SK161-GR
2SK241-Y

3SK74-K

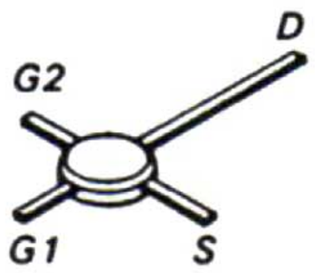

GP-1A06

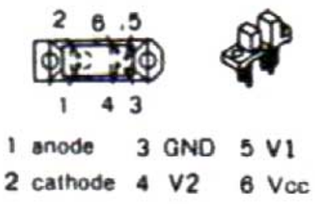

HZS7A1L
HZS11A1L
HZS12A2L

HZ5ALL
HZ16-2L
HZ30-2L
US1060M
10E2N

KV1320

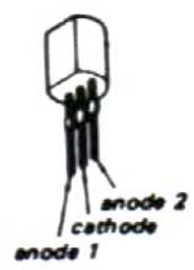

MC931

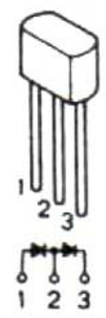

SVC333-M1

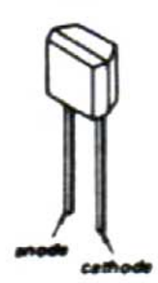

10DF6

SEL2213C
SEL2513E-D

SEL2510C

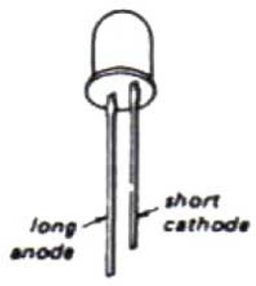

SEL2810A-C

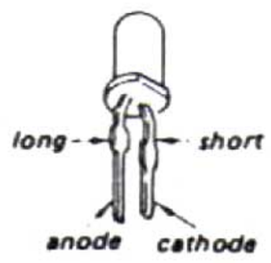

SEL2813A-C

www.hifiengine.com

SECTION 5
EXPLODED VIEWS

NOTE:

- The mechanical parts with no reference number in the exploded views are not supplied.
- The construction parts of an assembled part are indicated with a collation number in the remark column.
- Items marked "★" are not stocked since they are seldom required for routine service. Some delay should be anticipated when ordering these items.
- Due to standardization, parts with part number suffix -XX and -X may be different from the parts specified in the components used on the set.
- Color Indication of Appearance Parts Example:
  (RED) . . . KNOB, BALANCE (WHITE)
  ↑ Cabinet's Color ↑ Parts' Color

The components identified by mark ⚠ or dotted line with mark ⚠ are critical for safety.
Replace only with part number specified.

Les composants identifiés par une marque ⚠ sont critiques pour la sécurité.
Ne les remplacer que par une pièce portant le numéro spécifé.

(1) CABINET ASSEMBLY

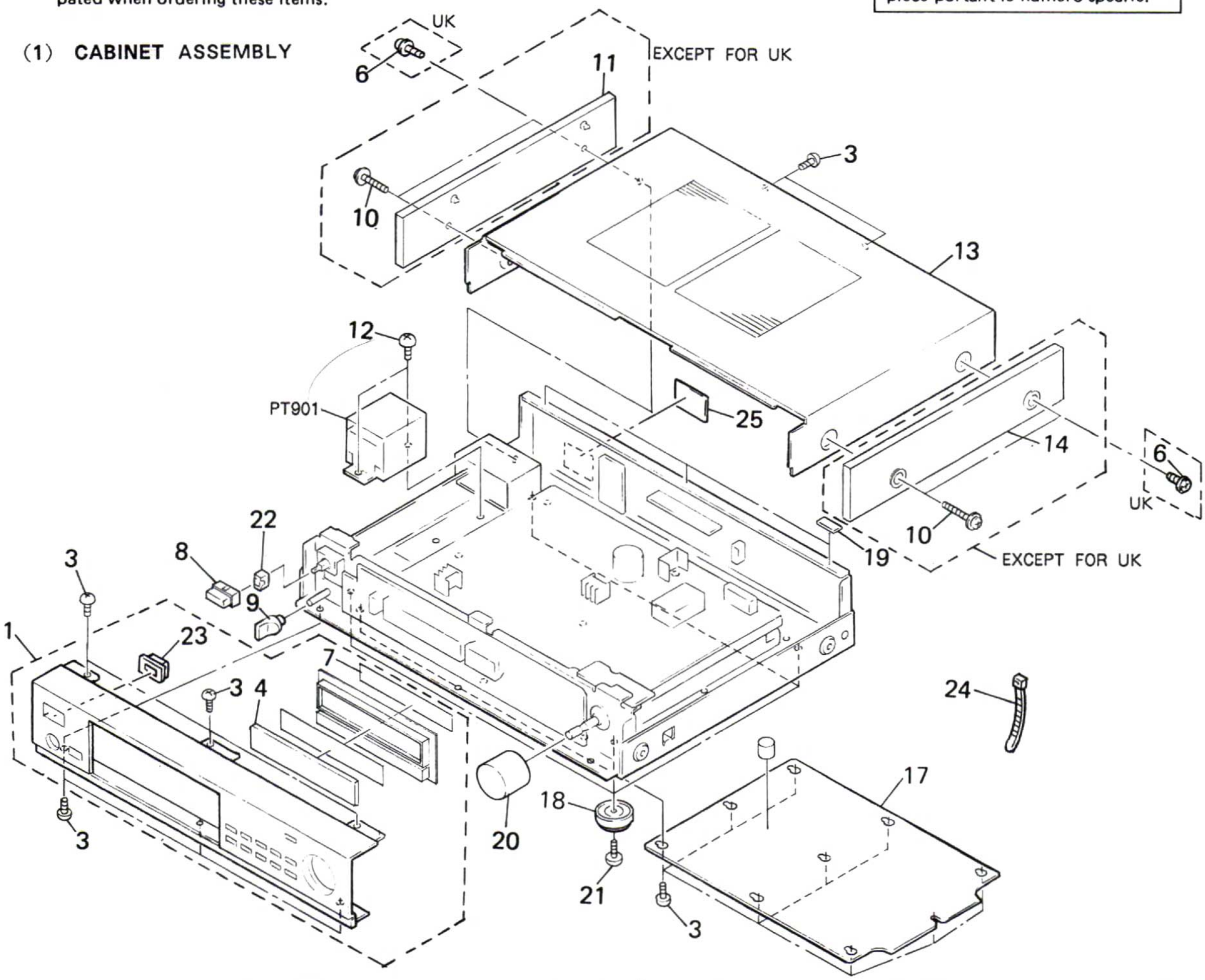

No.	Part No.	Description	Remarks
1	A-4317-947-A	(E).....PANEL ASSY, FRONT	
	A-4323-023-A	(US).....PANEL ASSY, FRONT	
	A-4323-059-A	(AEP,UK)...PANEL ASSY, FRONT	
	A-4323-243-A	(WG,IT)....PANEL ASSY, FRONT	
3	7-682-547-09	SCREW +BVTT 3X6 (S)	
4	*4-908-099-01	WINDOW, DISPLAY	
6	4-847-802-00	(UK)...SCREW	
7	*4-908-082-03	FILTER	
8	4-908-046-01	KNOB, SQUARE	
9	4-908-097-21	KNOB	
10	4-885-979-11	(US,AEP,WG,IT,E)...SCREW (4X25)	
11	X-4886-014-1	(US,E).....PLATE (LEFT) ASSY, SIDE	
	X-4886-027-1	(AEP,WG,IT)...PLATE (LEFT) ASSY, SIDE	
12	7-685-760-09	SCREW +BVTT 4X6 (S)	
13	4-908-043-01	CASE	

No.	Part No.	Description	Remarks
14	X-4886-015-1	(US,E).....PLATE (RIGHT) ASSY, SIDE	
	X-4886-028-1	(AEP,WG,IT)...PLATE (RIGHT) ASSY, SIDE	
17	*4-908-036-11	PLATE, BOTTOM	
18	X-3304-944-1	FOOT ASSY	
19	2-242-510-00	PAD, (C)	
20	4-908-081-01	KNOB (A)	
21	7-685-883-09	SCREW +BVTT 4X12 (S)	
22	4-864-307-00	RING	
23	4-908-044-11	ESCUTCHEON, POWER KNOB	
24	3-655-653-21	BAND (TAITON), BINDING	
25	*4-922-003-01	(IT)....LABEL, MODEL NUMBER (AE)	
	*4-922-003-11	(AEP)...LABEL, MODEL NUMBER (AE)	
	*4-922-004-01	(UK)....LABEL, MODEL NUMBER (UK)	
	*4-922-007-01	(US)....LABEL, MODEL NUMBER (U/CA)	
	*4-922-008-01	(WG)....LABEL, MODEL NUMBER (AE4)	
PT901⚠	1-449-371-11	(E).....TRANSFORMER, POWER	
PT901⚠	1-449-372-11	(US).....TRANSFORMER, POWER	
PT901⚠	1-449-373-11	(AEP,UK,WG,IT)...TRANSFORMER, POWER	

www.hifiengine.com

(2) CHASSIS ASSEMBLY

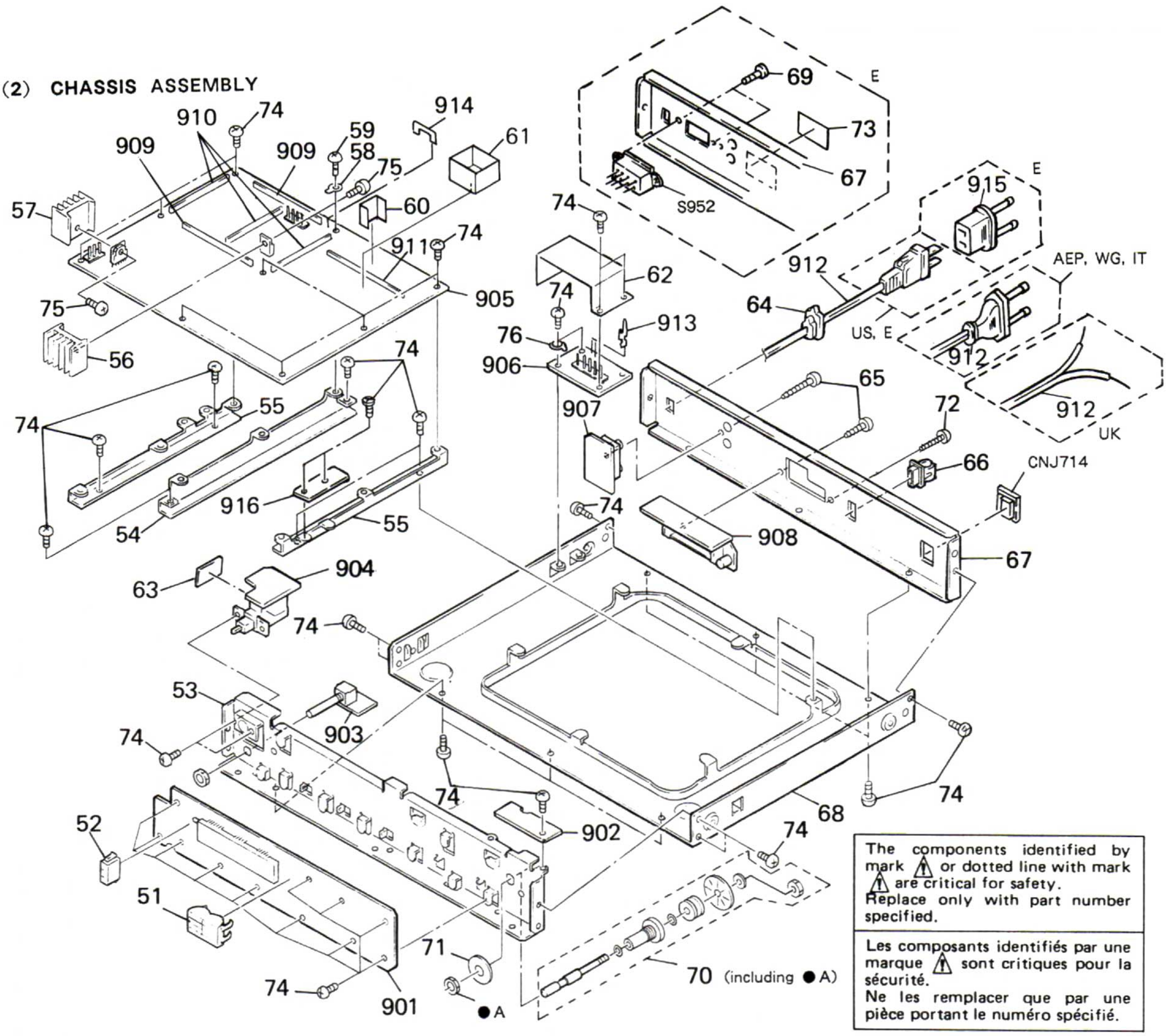

The components identified by mark ⚠ or dotted line with mark ⚠ are critical for safety.
Replace only with part number specified.

Les composants identifiés par une marque ⚠ sont critiques pour la sécurité.
Ne les remplacer que par une pièce portant le numéro spécifié.

No.	Part No.	Description	Remarks
51	4-908-093-01	HOLDER (A), LED	
52	4-908-092-01	HOLDER (B), LED	
53	*4-923-406-01	CHASSIS, FRONT	
54	*4-923-117-01	BRACKET (A)	
55	*4-923-116-01	BRACKET (B)	
56	*4-921-402-11	HEAT SINK	
57	*4-921-402-01	HEAT SINK	
58	4-870-539-00	PLATE, GROUND	
59	7-685-646-79	SCREW, SELF-TAPPING	
60	*4-911-325-01	PLATE (A), SHIELD	
61	*2-287-441-01	PLATE, SHIELD	
62	*4-908-078-01	PLATE, PROTECTION	
63	*4-911-357-01	INSULATOR	
64	*3-703-244-00	BUSHING (2104), CORD	
65	3-704-242-11	(EXCEPT FOR WG)...SCREW, TERMINAL, + BVTP CLAW	
	4-887-711-21	(WG)...SCREW, TERMINAL, CLAW, + BVTP	
66	*4-908-019-01	HOLDER (A), ANTENNA	
67	*4-923-414-01	PANEL, BACK	
68	*4-908-042-01	CHASSIS, MAIN	
69	7-685-534-19	(E)...SCREW +BVTT 2.6X8	
70	*X-4886-023-1	PLATE ASSY, SLIT	
71	*4-908-089-01	REINFORCEMENT	
72	7-685-647-79	SCREW +BVTP 3X10 TYPE2 IT-3	
73	*4-922-005-02	(E)...LABEL, MODEL NUMBER (E2/3)	
74	7-682-547-09	SCREW +BV 3X6, S TIGHT	
75	7-682-548-09	SCREW +B 3X8	

No.	Part No.	Description	Remarks
901	*1-624-572-11	PC BOARD, DISPLAY	
902	*1-624-578-11	PC BOARD, ENCORDER	
903	*1-624-577-11	PC BOARD, PGM SW	
904	*1-624-573-11	PC BOARD, AC SW	
905	*A-4351-673-A	(AEP,UK)...MOUNTED PCB, TUNER	
	*A-4351-674-A	(WG,IT)....MOUNTED PCB, TUNER	
	*A-4351-675-A	(US).....MOUNTED PCB, TUNER	
	*A-4351-676-A	(E).....MOUNTED PCB, TUNER	
906	*1-624-574-11	PC BOARD, AC TRANSLATION	
907	*1-624-575-11	PC BOARD, OUTPUT	
908	*1-624-576-11	PC BOARD, ANTENNA	
909	*1-560-242-71	BUS BAR 6P	
910	*1-560-242-31	BUS BAR 5P	
911	*1-560-242-51	BUS BAR 7P	
912	⚠1-555-795-00	(AEP,WG,IT)...CORD, POWER	
	⚠1-555-386-00	(E).....CORD, POWER	
	⚠1-556-035-11	(UK).....CORD, POWER	
	⚠1-557-577-11	(US).....CORD, POWER	
913	1-535-416-00	TERMINAL	
914	*1-560-242-61	BUS BAR 2P	
915	⚠1-526-565-00	(E)...AC PLUG ADAPTOR	
916	*1-627-522-11	PC BOARD, REMOCON	
CNJ714	*1-559-135-41	CORD (WITH CONNECTOR)	
S952	⚠1-570-307-11	(E)...SWITCH, VOLTAGE CHANGE	

www.hifiengine.com

SECTION 6
ELECTRICAL PARTS LIST

NOTE:

- Due to standardization, replacements in the parts list may be different from the parts specified in the diagrams or the components used on the set.
- Items marked "★" are not stocked since they are seldom required for routine service. Some delay should be anticipated when ordering these items.
- If there are two or more same circuits in a set such as a stereophonic machine, only typical circuit parts may be indicated and capacitors and resistors in other same circuits may be omitted.

CAPACITORS:
MF: μF, PF: μμF.

RESISTORS
- All resistors are in ohms.
- F: nonflammable

COILS
- MMH: mH, UH: μH

SEMICONDUCTORS
In each case, U: μ, for example:
UA...: μA..., UPA...: μPA...,
UPC...: μPC, UPD...: μPD...

The components identified by mark ⚠ or dotted line with mark ⚠ are critical for safety.
Replace only with part number specified.

Les composants identifiés par une marque ⚠ sont critiques pour la sécurité.
Ne les remplacer que par une pièce portant le numéro spécifié.

Ref.No.	Part No.	Description			
901	*1-624-572-11	PC BOARD, DISPLAY			
902	*1-624-578-11	PC BOARD, ENCORDER			
903	*1-624-577-11	PC BOARD, PGM SW			
904	*1-624-573-11	PC BOARD, AC SW			
905	*A-4351-673-A	(AEP,UK)...MOUNTED PCB, TUNER			
	*A-4351-674-A	(WG,IT)....MOUNTED PCB, TUNER			
	*A-4351-675-A	(US).....MOUNTED PCB, TUNER			
	*A-4351-676-A	(E).....MOUNTED PCB, TUNER			
906	*1-624-574-11	PC BOARD, AC TRANSLATION			
907	*1-624-575-11	PC BOARD, OUTPUT			
908	*1-624-576-11	PC BOARD, ANTENNA			
909	*1-560-242-71	BUS BAR 6P			
910	*1-560-242-31	BUS BAR 5P			
911	*1-560-242-51	BUS BAR 7P			
912	⚠1-555-795-00	(AEP,WG,IT)...CORD, POWER			
	⚠1-555-386-00	(E).....CORD, POWER			
	⚠1-556-035-00	(UK).....CORD, POWER			
	⚠1-557-577-00	(US).....CORD, POWER			
913	1-535-416-00	TERMINAL			
914	*1-560-242-61	BUS BAR 2P			
915	⚠1-526-565-00	(E)...AC PLUG ADAPTOR			
916	*1-627-522-11	PC BOARD, REMOCON			
BP901	*1-535-142-00	BASE POST 22MM (10MM PITCH) 5P			
BP902	*1-535-117-00	TERMINAL			
BP903	*1-535-116-00	TERMINAL			
C104	1-162-195-31	CERAMIC	4.7PF	10%	50V
C105	1-161-379-00	CERAMIC	0.01MF	30%	16V
C107	1-101-004-00	CERAMIC	0.01MF		50V
C109	1-162-196-31	CERAMIC	5.6PF	10%	50V
C110	1-162-199-31	CERAMIC	10PF	5%	50V
C111	1-162-282-31	CERAMIC	100PF	10%	50V
C112	1-161-379-00	CERAMIC	0.01MF	30%	16V
C114	1-161-379-00	CERAMIC	0.01MF	30%	16V
C115	1-162-195-31	CERAMIC	4.7PF	10%	50V
C116	1-162-199-31	CERAMIC	10PF	5%	50V
C117	1-162-206-31	CERAMIC	20PF	5%	50V
C118	1-162-197-31	CERAMIC	6.8PF	10%	50V
C119	1-101-004-00	CERAMIC	0.01MF		50V
C120	1-162-191-31	CERAMIC	2.2PF	10%	50V
C121	1-162-187-31	CERAMIC	1PF	20%	50V
C122	1-126-157-11	ELECT	10MF	20%	16V
C123	1-161-379-00	CERAMIC	0.01MF	30%	16V
C124	1-126-157-11	ELECT	10MF	20%	16V
C125	1-126-157-11	ELECT	10MF	20%	16V
C126	1-161-379-00	CERAMIC	0.01MF	30%	16V
C127	1-161-379-00	CERAMIC	0.01MF	30%	16V
C128	1-161-379-00	CERAMIC	0.01MF	30%	16V
C201	1-161-379-00	CERAMIC	0.01MF	30%	16V
C202	1-161-379-00	CERAMIC	0.01MF	30%	16V
C203	1-161-379-00	CERAMIC	0.01MF	30%	16V
C204	1-161-379-00	CERAMIC	0.01MF	30%	16V
C205	1-161-379-00	CERAMIC	0.01MF	30%	16V
C206	1-161-379-00	CERAMIC	0.01MF	30%	16V
C207	1-161-379-00	CERAMIC	0.01MF	30%	16V
C208	1-161-379-00	CERAMIC	0.01MF	30%	16V
C209	1-161-379-00	CERAMIC	0.01MF	30%	16V
C210	1-161-379-00	CERAMIC	0.01MF	30%	16V
C211	1-161-379-00	CERAMIC	0.01MF	30%	16V
C212	1-162-195-31	CERAMIC	4.7PF	10%	50V
C213	1-161-379-00	CERAMIC	0.01MF	30%	16V
C214	1-161-379-00	CERAMIC	0.01MF	30%	16V
C215	1-161-379-00	CERAMIC	0.01MF	30%	16V
C216	1-161-379-00	CERAMIC	0.01MF	30%	16V
C217	1-161-379-00	CERAMIC	0.01MF	30%	16V
C218	1-161-379-00	CERAMIC	0.01MF	30%	16V
C220	1-162-194-31	CERAMIC	3.9PF	10%	50V
C221	1-161-379-00	CERAMIC	0.01MF	30%	16V
C222	1-161-379-00	CERAMIC	0.01MF	30%	16V
C223	1-161-379-00	CERAMIC	0.01MF	30%	16V
C224	1-161-379-00	CERAMIC	0.01MF	30%	16V
C225	1-161-379-00	CERAMIC	0.01MF	30%	16V
C226	1-161-379-00	CERAMIC	0.01MF	30%	16V
C227	1-161-379-00	CERAMIC	0.01MF	30%	16V
C228	1-124-257-00	ELECT	2.2MF	20%	50V
C229	1-124-257-00	ELECT	2.2MF	20%	50V
C230	1-161-379-00	CERAMIC	0.01MF	30%	16V
C231	1-161-379-00	CERAMIC	0.01MF	30%	16V
C232	1-126-103-11	ELECT	470MF	20%	16V
C233	1-161-379-00	CERAMIC	0.01MF	30%	16V
C234	1-161-379-00	CERAMIC	0.01MF	30%	16V
C235	1-161-379-00	CERAMIC	0.01MF	30%	16V
C236	1-161-379-00	CERAMIC	0.01MF	30%	16V
C237	1-124-463-00	ELECT	0.1MF	20%	50V
C238	1-161-379-00	CERAMIC	0.01MF	30%	16V
C239	1-161-379-00	CERAMIC	0.01MF	30%	16V
C240	1-161-379-00	CERAMIC	0.01MF	30%	16V
C241	1-161-379-00	CERAMIC	0.01MF	30%	16V
C242	1-124-477-11	ELECT	47MF	20%	16V
C243	1-126-176-11	ELECT	220MF	20%	10V
C244	1-162-290-31	CERAMIC	470PF	10%	50V
C245	1-110-335-11	MYLAR	100PF	5%	50V

www.hifiengine.com

Ref.No.	Part No.	Description			
C246	1-162-285-31	CERAMIC	180PF	10%	50V
C247	1-110-340-11	MYLAR	270PF	5%	50V
C248	1-104-278-91	(WG,IT)...POLYSTYRENE	100PF	5%	50V
C248	1-130-475-00	(US,AEP,UK,E) ....MYLAR	0.0022MF	5%	50V
C249	1-124-479-11	ELECT	330MF	20%	25V
C251	1-161-379-00	CERAMIC	0.01MF	30%	16V
C252	1-126-176-11	ELECT	220MF	20%	10V
C254	1-124-360-00	ELECT	1000MF	20%	16V
C255	1-161-379-00	CERAMIC	0.01MF	30%	16V
C256	1-130-471-00	MYLAR	0.001MF	5%	50V
C257	1-102-963-00	CERAMIC	33PF	5%	50V
C258	1-161-379-00	CERAMIC	0.01MF	30%	16V
C259	1-161-379-00	CERAMIC	0.01MF	30%	16V
C260	1-161-379-00	CERAMIC	0.01MF	30%	16V
C262	1-162-219-31	CERAMIC	68PF	5%	50V
C301	1-124-465-00	ELECT	0.47MF	20%	50V
C302	1-124-438-00	ELECT	1MF	20%	50V
C303	1-136-161-00	FILM	0.047MF	5%	50V
C304	1-124-438-00	ELECT	1MF	20%	50V
C305	1-124-438-00	ELECT	1MF	20%	50V
C306	1-130-483-00	MYLAR	0.01MF	5%	50V
C307	1-104-126-11	POLYSTYRENE	0.01MF	10%	50V
C308	1-124-465-00	ELECT	0.47MF	20%	50V
C309	1-124-465-00	ELECT	0.47MF	20%	50V
C310	1-130-483-00	MYLAR	0.01MF	5%	50V
C312	1-107-208-00	MICA	18PF	5%	500V
C313	1-107-208-00	MICA	18PF	5%	500V
C314	1-124-472-11	ELECT	470MF	20%	10V
C315	1-126-103-11	ELECT	470MF	20%	16V
C316	1-124-438-00	ELECT	1MF	20%	50V
C317	1-130-475-00	MYLAR	0.0022MF	5%	50V
C318	1-130-475-00	MYLAR	0.0022MF	5%	50V
C326	1-126-163-11	ELECT	4.7MF	20%	50V
C328	1-124-120-11	ELECT	220MF	20%	25V
C330	1-124-465-00	ELECT	0.47MF	20%	50V
C331	1-104-271-11	(EXCEPT FOR US) ...POLYSTYRENE	750PF	5%	50V
C331	1-104-303-11	(US)...POLYSTYRENE	0.0011MF	5%	50V
C332	1-104-271-11	(EXCEPT FOR US) ...POLYSTYRENE	750PF	5%	50V
C332	1-104-303-11	(US)...POLYSTYRENE	0.0011MF	5%	50V
C333	1-124-478-11	ELECT	100MF	20%	25V
C334	1-130-955-00	FILM	0.01MF	5%	100V
C335	1-130-309-00	FILM	0.033MF	5%	100V
C336	1-136-250-11	FILM	0.001MF	5%	100V
C337	1-123-875-11	ELECT	10MF	20%	50V
C338	1-136-166-00	FILM	0.12MF	5%	50V
C340	1-130-955-00	FILM	0.01MF	5%	100V
C341	1-130-309-00	FILM	0.033MF	5%	100V
C342	1-136-250-11	FILM	0.001MF	5%	100V
C343	1-123-875-11	ELECT	10MF	20%	50V
C344	1-126-162-11	ELECT	3.3MF	20%	50V
C345	1-126-162-11	ELECT	3.3MF	20%	50V
C351	1-162-294-31	(WG,IT)...CERAMIC	0.001MF	10%	50V
C352	1-162-294-31	(WG,IT)...CERAMIC	0.001MF	10%	50V
C401	1-124-438-00	ELECT	1MF	20%	50V

Ref.No.	Part No.	Description			
C402	1-161-379-00	CERAMIC	0.01MF	30%	16V
C403	1-161-379-00	CERAMIC	0.01MF	30%	16V
C404	1-161-379-00	CERAMIC	0.01MF	30%	16V
C405	1-124-477-11	ELECT	47MF	20%	16V
C406	1-161-379-00	CERAMIC	0.01MF	30%	16V
C407	1-161-379-00	CERAMIC	0.01MF	30%	16V
C408	1-161-379-00	CERAMIC	0.01MF	30%	16V
C409	1-161-379-00	CERAMIC	0.01MF	30%	16V
C410	1-126-162-11	ELECT	3.3MF	20%	50V
C411	1-126-101-11	ELECT	100MF	20%	16V
C412	1-161-379-00	CERAMIC	0.01MF	30%	16V
C413	1-124-438-00	ELECT	1MF	20%	50V
C414	1-124-438-00	ELECT	1MF	20%	50V
C415	1-126-163-11	ELECT	4.7MF	20%	50V
C416	1-161-379-00	CERAMIC	0.01MF	30%	16V
C418	1-162-294-31	CERAMIC	0.001MF	10%	50V
C419	1-162-215-31	CERAMIC	47PF	5%	50V
C420	1-161-379-00	CERAMIC	0.01MF	30%	16V
C421	1-162-291-31	CERAMIC	560PF	10%	50V
C423	1-124-465-00	ELECT	0.47MF	20%	50V
C451	1-161-374-11	(AEP,UK,WG,IT) ...CERAMIC	0.0015MF	30%	16V
C452	1-161-374-11	(AEP,UK,WG,IT) ...CERAMIC	0.0015MF	30%	16V
C453	1-161-379-00	(AEP,UK,WG,IT) ...CERAMIC	0.01MF	30%	16V
C454	1-161-379-00	(AEP,UK,WG,IT) ...CERAMIC	0.01MF	30%	16V
C455	1-161-379-00	(AEP,UK,WG,IT) ...CERAMIC	0.01MF	30%	16V
C457	1-101-004-00	(AEP,UK,WG,IT) ...CERAMIC	0.01MF		50V
C501	1-124-254-00	ELECT	0.68MF	20%	50V
C502	1-124-463-00	ELECT	0.1MF	20%	50V
C503	1-126-096-11	ELECT	10MF	20%	35V
C504	1-126-162-11	ELECT	3.3MF	20%	50V
C505	1-124-484-11	ELECT	220MF	20%	35V
C506	1-161-379-00	CERAMIC	0.01MF	30%	16V
C507	1-102-959-00	CERAMIC	22PF	5%	50V
C508	1-102-959-00	CERAMIC	22PF	5%	50V
C509	1-161-379-00	CERAMIC	0.01MF	30%	16V
C510	1-161-379-00	CERAMIC	0.01MF	30%	16V
C511	1-161-379-00	CERAMIC	0.01MF	30%	16V
C512	1-126-157-11	ELECT	10MF	20%	16V
C513	1-126-157-11	ELECT	10MF	20%	16V
C514	1-161-379-00	CERAMIC	0.01MF	30%	16V
C551	1-124-465-00	(AEP,UK,WG,IT)...ELECT	0.47MF	20%	50V
C552	1-124-252-00	(AEP,UK,WG,IT)...ELECT	0.33MF	20%	50V
C553	1-126-096-11	(AEP,UK,WG,IT)...ELECT	10MF	20%	35V
C601	1-126-162-11	ELECT	3.3MF	20%	50V
C602	1-161-379-00	CERAMIC	0.01MF	30%	16V
C603	1-161-379-00	CERAMIC	0.01MF	30%	16V
C604	1-131-377-00	TANTALUM	10MF	10%	6.3V
C605	1-126-318-11	ELECT	39000MF		5.5V
C608	1-124-234-00	ELECT	22MF	20%	16V
C609	1-161-379-00	CERAMIC	0.01MF	30%	16V

www.hifiengine.com

Ref.No.	Part No.	Description			
C651	1-161-379-00	CERAMIC	0.01MF	30%	16V
C670	1-161-379-00	CERAMIC	0.01MF	30%	16V
C671	1-126-157-11	ELECT	10MF	20%	16V
C672	1-101-361-00	CERAMIC	150PF	5%	50V
C673	1-101-361-00	CERAMIC	150PF	5%	50V
C674	1-161-379-00	(EXCEPT FOR US)..CERAMIC	0.01MF	30%	16V
C701	1-161-379-00	CERAMIC	0.01MF	30%	16V
C702	1-161-379-00	CERAMIC	0.01MF	30%	16V
C801	1-124-477-11	ELECT	47MF	20%	16V
C802	1-124-477-11	ELECT	47MF	20%	16V
C803	1-130-483-00	MYLAR	0.01MF	5%	50V
C804	1-130-482-00	MYLAR	0.0082MF	5%	50V
C805	1-130-468-00	MYLAR	560PF	5%	50V
C806	1-126-157-11	ELECT	10MF	20%	16V
C807	1-123-875-11	ELECT	10MF	20%	50V
C808	1-126-157-11	ELECT	10MF	20%	16V
C809	1-126-157-11	ELECT	10MF	20%	16V
C901	1-124-438-00	ELECT	1MF	20%	50V
C902	1-126-101-11	ELECT	100MF	20%	16V
C903	1-126-315-11	ELECT	1800MF	20%	63V
C904	1-130-789-00	FILM	1MF	5%	100V
C905	1-126-101-11	ELECT	100MF	20%	16V
C906	1-124-446-11	(EXCEPT FOR US) ...ELECT	47MF	20%	10V
C906	1-126-157-11	(US)....ELECT	10MF	20%	16V
C907	1-124-446-11	ELECT	47MF	20%	10V
C908	1-126-104-11	ELECT	470MF	20%	35V
C909	1-126-162-11	ELECT	3.3MF	20%	50V
C910	1-101-004-00	CERAMIC	0.01MF		50V
C911	1-101-004-00	CERAMIC	0.01MF		50V
C912	1-101-004-00	CERAMIC	0.01MF		50V
C913	1-101-004-00	CERAMIC	0.01MF		50V
C914	1-101-004-00	CERAMIC	0.01MF		50V
C915	1-101-004-00	CERAMIC	0.01MF		50V
C916	1-101-004-00	CERAMIC	0.01MF		50V
C917	1-101-004-00	CERAMIC	0.01MF		50V
C918	1-124-910-11	ELECT	47MF	20%	35V
C919	1-124-122-11	ELECT	100MF	20%	35V
C920	1-124-912-11	ELECT	330MF	20%	50V
C921	1-101-004-00	CERAMIC	0.01MF		50V
C922	1-124-910-11	ELECT	47MF	20%	35V
C923	1-124-910-11	ELECT	47MF	20%	35V
C924	1-124-912-11	ELECT	330MF	20%	50V
C925	1-101-004-00	CERAMIC	0.01MF		50V
C927	1-126-162-11	ELECT	3.3MF	20%	50V
C928	1-124-479-11	(US).....ELECT	330MF	20%	25V
C928	1-124-484-11	(EXCEPT FOR US) ...ELECT	220MF	20%	35V
C929	1-130-483-00	MYLAR	0.01MF	5%	50V
C951 ⚠	1-161-744-00	CERAMIC	0.01MF		400V
C971 ⚠	1-161-742-00	(WG,IT)...CERAMIC	0.0022MF	20%	400V
C972 ⚠	1-161-742-00	(WG,IT)...CERAMIC	0.0022MF	20%	400V
CF201	1-567-393-11	FILTER, CERAMIC			
CF202	1-567-393-11	FILTER, CERAMIC			
CF203	1-567-389-11	FILTER, CERAMIC			
CF204	1-567-389-11	FILTER, CERAMIC			
CF301	1-567-250-11	OSCILLATOR, CERAMIC			
CF401	1-527-981-00	FILTER, CERAMIC			

Ref.No.	Part No.	Description
CF402	1-527-826-00	FILTER, CERAMIC
CF403	1-527-937-00	FILTER, CERAMIC
CF670	1-527-532-00	OSCILLATOR, CERAMIC
CN701A*	1-562-327-00	SOCKET, CONNECTOR 3P
CN701B*	1-562-327-00	SOCKET, CONNECTOR 3P
CN702A*	1-562-251-00	SOCKET, CONNECTOR 6P
CN702B*	1-562-251-00	SOCKET, CONNECTOR 6P
CN703A*	1-562-327-00	SOCKET, CONNECTOR 3P
CN703B*	1-562-327-00	SOCKET, CONNECTOR 3P
CN704A*	1-562-327-00	SOCKET, CONNECTOR 3P
CN704B*	1-562-327-00	SOCKET, CONNECTOR 3P
CN707A*	1-562-251-00	SOCKET, CONNECTOR 6P
CN707B*	1-562-251-00	SOCKET, CONNECTOR 6P
CN708A*	1-562-249-00	SOCKET, CONNECTOR 4P
CN708B*	1-562-249-00	SOCKET, CONNECTOR 4P
CN709A*	1-562-251-00	SOCKET, CONNECTOR 6P
CN709B*	1-562-251-00	SOCKET, CONNECTOR 6P
CN710A*	1-562-249-00	SOCKET, CONNECTOR 4P
CN710B*	1-562-249-00	SOCKET, CONNECTOR 4P
CN711A*	1-562-327-00	SOCKET, CONNECTOR 3P
CN711B*	1-562-327-00	SOCKET, CONNECTOR 3P
CN712A*	1-562-249-00	SOCKET, CONNECTOR 4P
CN712B*	1-562-249-00	SOCKET, CONNECTOR 4P
CNJ714*	1-559-135-41	CORD (WITH CONNECTOR)
CNJ851	1-562-916-21	JACK, PIN 2P (OUT PUT)
CP701	1-233-020-11	COMPOSITION CIRCUIT BLOCK
CP702	1-233-021-11	COMPOSITION CIRCUIT BLOCK
CT101	1-141-304-21	TRIMAR, CERAMIC
CT102	1-141-304-21	TRIMAR, CERAMIC
CT103	1-141-304-21	TRIMAR, CERAMIC
CT201	1-141-232-00	CAP, TRIMMER
D101	8-719-901-59	DIODE KV1320
D102	8-719-901-59	DIODE KV1320
D103	8-719-901-59	DIODE KV1320
D104	8-719-901-59	DIODE KV1320
D105	8-719-933-74	DIODE HZS12A2L
D201	8-719-000-26	DIODE US1060M
D202	8-719-000-26	DIODE US1060M
D203	8-719-000-26	DIODE US1060M
D204	8-719-000-12	DIODE MC931
D205	8-719-000-12	DIODE MC931
D206	8-719-933-43	DIODE HZS7A1L
D207	8-719-933-43	DIODE HZS7A1L
D208	8-719-936-88	DIODE SVC333-M1
D301	8-719-000-26	DIODE US1060M
D302	8-719-000-26	DIODE US1060M
D304	8-719-000-26	DIODE US1060M
D305	8-719-000-26	DIODE US1060M
D306	8-719-000-26	DIODE US1060M
D307	8-719-000-26	DIODE US1060M
D309	8-719-000-26	DIODE US1060M
D310	8-719-000-26	DIODE US1060M
D501	8-719-951-11	DIODE HZ5ALL
D601	8-719-000-26	DIODE US1060M
D602	8-719-000-26	DIODE US1060M

Note:
The components identified by mark ⚠ or dotted line with mark ⚠ are critical for safety.
Replace only with part number specified.

Note:
Les composants identifiés par une marque ⚠ sont critiques pour la sécurité.
Ne les remplacer que par une pièce portant le numéro spécifié.

www.hifiengine.com

Ref.No.	Part No.	Description
D603	8-719-000-26	DIODE US1060M
D604	8-719-000-26	DIODE US1060M
D605	8-719-000-26	DIODE US1060M
D606	8-719-000-26	DIODE US1060M
D607	8-719-000-26	DIODE US1060M
D608	8-719-000-26	DIODE US1060M
D609	8-719-000-26	DIODE US1060M
D610	8-719-000-26	DIODE US1060M
D611	8-719-000-26	DIODE US1060M
D612	8-719-000-26	DIODE US1060M
D613	8-719-000-26	DIODE US1060M
D614	8-719-000-26	DIODE US1060M
D615	8-719-000-26	DIODE US1060M
D616	8-719-000-26	DIODE US1060M
D617	8-719-000-26	DIODE US1060M
D618	8-719-000-26	DIODE US1060M
D620	8-719-000-26	(EXCEPT FOR US)...DIODE US1060M
D622	8-719-000-26	DIODE US1060M
D623	8-719-000-26	DIODE US1060M
D625	8-719-000-26	(US)...DIODE US1060M
D626	8-719-000-26	(E)....DIODE US1060M
D627	8-719-000-26	DIODE US1060M
D628	8-719-000-26	DIODE US1060M
D629	8-719-000-26	DIODE US1060M
D630	8-719-000-26	DIODE US1060M
D631	8-719-000-26	DIODE US1060M
D632	8-719-000-26	DIODE US1060M
D634	8-719-000-26	DIODE US1060M
D635	8-719-000-26	DIODE US1060M
D636	8-719-000-26	DIODE US1060M
D637	8-719-000-26	DIODE US1060M
D638	8-719-000-26	DIODE US1060M
D639	8-719-000-26	DIODE US1060M
D650	8-719-913-37	DIODE GP-1A06
D670	8-719-000-26	DIODE US1060M
D701	8-719-301-52	DIODE SEL2810A-C
D702	8-719-301-52	DIODE SEL2810A-C
D703	8-719-301-52	DIODE SEL2810A-C
D704	8-719-301-52	DIODE SEL2810A-C
D705	8-719-301-52	DIODE SEL2810A-C
D706	8-719-301-52	DIODE SEL2810A-C
D707	8-719-301-52	DIODE SEL2810A-C
D708	8-719-301-52	DIODE SEL2810A-C
D709	8-719-301-52	DIODE SEL2810A-C
D710	8-719-301-52	DIODE SEL2810A-C
D711	8-719-301-52	DIODE SEL2810A-C
D712	8-719-300-82	DIODE SEL2213C
D713	8-719-300-82	DIODE SEL2213C
D714	8-719-304-49	DIODE SEL2513E-D
D715	8-719-304-49	DIODE SEL2513E-D
D716	8-719-301-55	DIODE SEL2813A-C
D717	8-719-301-55	DIODE SEL2813A-C
D718	8-719-301-52	DIODE SEL2810A-C
D719	8-719-301-55	DIODE SEL2813A-C
D720	8-719-301-55	DIODE SEL2813A-C
D721	8-719-303-00	DIODE SEL2510C
D801	8-719-933-43	DIODE HZS7A1L

Ref.No.	Part No.	Description
D901	9-983-884-01	DIODE 10DF2
D902	9-983-884-01	DIODE 10DF2
D903	9-983-884-01	DIODE 10DF2
D904	9-983-884-01	DIODE 10DF2
D905	9-983-884-01	DIODE 10DF2
D906	9-983-884-01	DIODE 10DF2
D907	9-983-884-01	DIODE 10DF2
D908	9-983-884-01	DIODE 10DF2
D909	8-719-200-77	DIODE 10E2N
D910	8-719-200-77	DIODE 10E2N
D911	8-719-901-62	DIODE HZ16-2L
D912	8-719-913-02	DIODE HZ30-2L
D913	8-719-933-63	DIODE HZS11A1
D914	8-719-000-26	DIODE US1060M
D915	8-719-000-26	DIODE US1060M
D916	8-719-000-26	DIODE US1060M
D917	8-719-000-26	DIODE US1060M
D918	8-719-000-26	DIODE US1060M
FE401	1-235-812-11	ENCAPSULATED COMPONENT
FE402	1-236-460-11	(AEP,UK,WG,IT)..ENCAPSULATED COMPONENT
FL701	1-519-385-11	INDICATOR TUBE, FLUORESCENT
IC201	8-759-111-72	IC UPC1163HA
IC202	8-759-111-72	IC UPC1163HA
IC203	8-759-812-35	IC LA1235
IC204	8-759-111-72	IC UPC1163HA
IC205	8-759-602-01	IC M5220P
IC301	8-759-802-57	IC CXA1064S
IC302	8-759-602-01	IC M5220P
IC401	8-759-812-45	IC LA1245
IC501	8-757-925-20	IC CX-7925B
IC601	8-759-141-18	IC UPD75108CW-107
IC602	8-759-601-10	IC M4011BP
IC670	8-759-630-97	IC M50760-S0X437A
IC701	8-759-820-08	IC LC7570
IC702	8-759-909-15	IC MSL915RS
IC703	8-759-603-19	IC M54977P
IC704	8-759-800-95	IC LB1493
IC705	8-759-901-45	IC SN74LS145N
IC801	8-759-800-95	IC LB1493
IC802	8-759-208-06	IC TC4051BP
IC803	8-759-132-40	IC UPC324C
IC901	8-759-820-09	IC LA5667
IFT101	1-404-666-11	COIL, FM IFT
IFT201	1-404-665-11	COIL, FM IFT (2)
IFT202	1-404-665-11	COIL, FM IFT (2)
IFT203	1-404-665-11	COIL, FM IFT (2)
IFT204	1-404-665-11	COIL, FM IFT (2)
IFT205	1-404-669-11	COIL, DISCRIMINATOR
IFT206	1-404-668-11	COIL, FM DET (1)
IFT207	1-404-667-11	COIL, FM DET (2)
IFT401	1-404-326-00	TRANSFORMER, IF
L101	1-402-240-11	COIL (ANT)
L102	1-426-249-11	COIL (RF)
L103	1-459-647-11	COIL (WITH CORE)
L104	1-459-618-11	COIL
L105	1-410-501-11	INDUCTOR 2.2UH
L106	1-410-501-11	INDUCTOR 2.2UH

www.hifiengine.com

Ref.No.	Part No.	Description
L107	1-407-176-XX	INDUCTOR 390UH
L108	1-410-521-11	INDUCTOR 100UH
L201	1-410-521-11	INDUCTOR 100UH
L202	1-410-521-11	INDUCTOR 100UH
L203	1-410-781-11	INDUCTOR 33MMH
L204	1-410-781-11	INDUCTOR 33MMH
L205	1-408-577-11	INDUCTOR 150UH
L206	1-410-521-11	INDUCTOR 100UH
L301	1-409-413-11	COIL (TUNING)
L401	1-410-525-11	(AEP,UK,WG,IT)...INDUCTOR 220UH
L402	1-410-521-11	(AEP,UK,WG,IT)...INDUCTOR 100UH
L670	1-410-521-11	INDUCTOR 100UH
LPF201	1-235-892-11	(WG,IT)...FILTER, LOW PASS
PT901⚠	1-449-371-11	(E).....TRANSFORMER, POWER
PT901⚠	1-449-372-11	(US).....TRANSFORMER, POWER
PT901⚠	1-449-373-11	(AEP,UK,WG,IT)...TRANSFORMER, POWER
Q101	8-729-200-55	TRANSISTOR 2SK241Y
Q102	8-729-103-29	TRANSISTOR 3SK74-K
Q103	8-729-216-13	TRANSISTOR 2SK161GR
Q104	8-729-216-13	TRANSISTOR 2SK161GR
Q105	8-729-216-13	TRANSISTOR 2SK161GR
Q106	8-729-178-54	TRANSISTOR 2SC2785
Q201	8-729-800-43	TRANSISTOR 2SK152-3
Q202	8-729-178-54	TRANSISTOR 2SC2785
Q203	8-729-806-26	TRANSISTOR 2SC3901
Q204	8-729-806-26	TRANSISTOR 2SC3901
Q205	8-729-806-26	TRANSISTOR 2SC3901
Q206	8-729-806-26	TRANSISTOR 2SC3901
Q207	8-729-806-26	TRANSISTOR 2SC3901
Q208	8-729-200-55	TRANSISTOR 2SK241Y
Q209	8-729-806-26	TRANSISTOR 2SC3901
Q210	8-729-200-55	TRANSISTOR 2SK241Y
Q211	8-729-201-96	TRANSISTOR 2SC380TMY
Q212	8-729-900-89	TRANSISTOR DTC144ES
Q213	8-729-900-65	TRANSISTOR DTA144ES
Q214	8-729-900-89	TRANSISTOR DTC144ES
Q215	8-729-806-26	TRANSISTOR 2SC3901
Q216	8-729-806-26	TRANSISTOR 2SC3901
Q217	8-729-900-89	TRANSISTOR DTC144ES
Q218	8-729-201-56	TRANSISTOR 2SK246GR2
Q219	8-729-201-56	TRANSISTOR 2SK246GR2
Q220	8-729-802-43	TRANSISTOR 2SK125-3
Q221	8-729-178-54	TRANSISTOR 2SC2785
Q222	8-729-900-89	TRANSISTOR DTC144ES
Q223	8-729-900-89	TRANSISTOR DTC144ES
Q301	8-729-178-54	TRANSISTOR 2SC2785
Q303	8-729-900-89	TRANSISTOR DTC144ES
Q304	8-729-900-65	TRANSISTOR DTA144ES
Q305	8-729-201-56	TRANSISTOR 2SK246GR2
Q306	8-729-201-56	TRANSISTOR 2SK246GR2
Q307	8-729-178-54	TRANSISTOR 2SC2785
Q308	8-729-178-54	TRANSISTOR 2SC2785
Q309	8-729-900-89	TRANSISTOR DTC144ES
Q310	8-729-900-89	TRANSISTOR DTC144ES
Q401	8-729-216-13	(AEP,UK,WG,IT)...TRANSISTOR 2SK161GR
Q402	8-729-806-26	TRANSISTOR 2SC3901
Q403	8-729-178-54	TRANSISTOR 2SC2785
Q404	8-729-178-54	TRANSISTOR 2SC2785
Q405	8-729-806-26	TRANSISTOR 2SC3901
Q406	8-729-900-89	TRANSISTOR DTC144ES
Q407	8-729-900-89	TRANSISTOR DTC144ES
Q408	8-729-201-56	TRANSISTOR 2SK246GR2
Q451	8-729-216-13	(AEP,UK,WG,IT)...TRANSISTOR 2SK161GR
Q452	8-729-900-89	(AEP,UK,WG,IT)...TRANSISTOR DTC144ES
Q453	8-729-900-89	(AEP,UK,WG,IT)...TRANSISTOR DTC144ES
Q454	8-729-900-89	(AEP,UK,WG,IT)...TRANSISTOR DTC144ES
Q455	8-729-900-89	(AEP,UK,WG,IT)...TRANSISTOR DTC144ES
Q456	8-729-900-89	(AEP,UK,WG,IT)...TRANSISTOR DTC144ES
Q457	8-729-107-98	(AEP,UK,WG,IT)...TRANSISTOR 2SC3622A-L
Q458	8-729-110-68	(AEP,UK,WG,IT)...TRANSISTOR 2SA1409-L
Q501	8-729-203-05	TRANSISTOR 2SK30AGR33
Q502	8-729-600-27	TRANSISTOR 2SC634SP
Q503	8-729-203-05	TRANSISTOR 2SK30AGR33
Q504	8-729-178-54	TRANSISTOR 2SC2785
Q551	8-729-203-05	(AEP,UK,WG,IT)...TRANSISTOR 2SK30AGR33
Q552	8-729-600-27	(AEP,UK,WG,IT)...TRANSISTOR 2SC634SP
Q601	8-729-806-26	TRANSISTOR 2SC3901
Q602	8-729-178-54	TRANSISTOR 2SC2785
Q605	8-729-900-89	TRANSISTOR DTC144ES
Q606	8-729-117-54	TRANSISTOR 2SA1175
Q607	8-729-900-89	TRANSISTOR DTC144ES
Q608	8-729-900-89	TRANSISTOR DTC144ES
Q609	8-729-107-94	(US,E)...TRANSISTOR 2SC3622
Q610	8-729-178-54	TRANSISTOR 2SC2785
Q611	8-729-806-26	TRANSISTOR 2SC3901
Q612	8-729-178-54	TRANSISTOR 2SC2785
Q613	8-729-900-89	TRANSISTOR DTC144ES
Q614	8-729-900-89	TRANSISTOR DTC144ES
Q615	8-729-900-89	TRANSISTOR DTC144ES
Q670	8-729-178-54	TRANSISTOR 2SC2785
Q701	8-729-900-89	TRANSISTOR DTC144ES
Q702	8-729-900-89	TRANSISTOR DTC144ES
Q703	8-729-900-89	TRANSISTOR DTC144ES
Q801	8-729-806-26	TRANSISTOR 2SC3901
Q901	8-729-107-53	TRANSISTOR 2SC2275-A
Q902	8-729-201-56	TRANSISTOR 2SK246GR2
Q903	8-729-177-43	TRANSISTOR 2SD774
Q904	8-729-103-43	TRANSISTOR 2SB734
R101	1-259-470-11	CARBON 56K 5% 1/6W
R102	1-259-468-11	CARBON 47K 5% 1/6W
R103	1-259-404-11	CARBON 100 5% 1/6W
R104	1-259-470-11	CARBON 56K 5% 1/6W
R105	1-259-470-11	CARBON 56K 5% 1/6W
R106	1-259-470-11	CARBON 56K 5% 1/6W
R107	1-259-392-11	CARBON 33 5% 1/6W
R108	1-259-476-11	CARBON 100K 5% 1/6W
R109	1-259-476-11	CARBON 100K 5% 1/6W
R110	1-259-476-11	CARBON 100K 5% 1/6W
R111	1-247-700-11	CARBON 100 5% 1/4W
R112	1-259-404-11	CARBON 100 5% 1/6W

Note:
The components identified by mark ⚠ or dotted line with mark ⚠ are critical for safety.
Replace only with part number specified.

Note:
Les composants identifiés par une marque ⚠ sont critiques pour la sécurité.
Ne les remplacer que par une pièce portant le numéro spécifié.

www.hifiengine.com

Ref.No.	Part No.	Description			
R114	1-259-456-11	CARBON	15K	5%	1/6W
R115	1-259-468-11	CARBON	47K	5%	1/6W
R116	1-259-404-11	CARBON	100	5%	1/6W
R117	1-259-416-11	CARBON	330	5%	1/6W
R118	1-259-428-11	CARBON	1K	5%	1/6W
R119	1-249-504-11	CARBON	10	5%	1/4W
R120	1-259-468-11	CARBON	47K	5%	1/6W
R201	1-259-408-11	CARBON	150	5%	1/6W
R202	1-259-416-11	CARBON	330	5%	1/6W
R203	1-249-504-11	CARBON	10	5%	1/4W
R204	1-259-416-11	CARBON	330	5%	1/6W
R205	1-259-404-11	CARBON	100	5%	1/6W
R206	1-259-416-11	CARBON	330	5%	1/6W
R207	1-249-504-11	CARBON	10	5%	1/4W
R208	1-259-416-11	CARBON	330	5%	1/6W
R209	1-259-404-11	CARBON	100	5%	1/6W
R210	1-259-420-11	CARBON	470	5%	1/6W
R211	1-249-504-11	CARBON	10	5%	1/4W
R213	1-259-438-11	CARBON	2.7K	5%	1/6W
R214	1-259-452-11	CARBON	10K	5%	1/6W
R215	1-259-462-11	CARBON	27K	5%	1/6W
R216	1-259-428-11	CARBON	1K	5%	1/6W
R217	1-249-504-11	CARBON	10	5%	1/4W
R218	1-259-452-11	CARBON	10K	5%	1/6W
R219	1-259-450-11	CARBON	8.2K	5%	1/6W
R220	1-259-452-11	CARBON	10K	5%	1/6W
R221	1-259-452-11	CARBON	10K	5%	1/6W
R224	1-259-438-11	CARBON	2.7K	5%	1/6W
R225	1-259-452-11	CARBON	10K	5%	1/6W
R226	1-259-416-11	CARBON	330	5%	1/6W
R227	1-259-384-11	CARBON	15	5%	1/6W
R228	1-259-416-11	CARBON	330	5%	1/6W
R230	1-259-416-11	CARBON	330	5%	1/6W
R231	1-259-476-11	CARBON	100K	5%	1/6W
R232	1-259-416-11	CARBON	330	5%	1/6W
R236	1-259-476-11	CARBON	100K	5%	1/6W
R237	1-259-416-11	CARBON	330	5%	1/6W
R238	1-259-470-11	CARBON	56K	5%	1/6W
R240	1-259-458-11	CARBON	18K	5%	1/6W
R241	1-247-700-11	CARBON	100	5%	1/4W
R242	1-259-462-11	CARBON	27K	5%	1/6W
R243	1-259-454-11	CARBON	12K	5%	1/6W
R244	1-259-428-11	CARBON	1K	5%	1/6W
R245	1-259-444-11	CARBON	4.7K	5%	1/6W
R246	1-259-436-11	CARBON	2.2K	5%	1/6W
R247	1-259-416-11	CARBON	330	5%	1/6W
R248	1-259-428-11	CARBON	1K	5%	1/6W
R249	1-249-504-11	CARBON	10	5%	1/4W
R250	1-247-708-11	CARBON	470	5%	1/4W
R251	1-259-500-11	CARBON	1M	5%	1/6W
R252	1-247-718-11	CARBON	2.7K	5%	1/4W
R253	1-247-713-11	CARBON	1K	5%	1/4W
R254	1-259-452-11	CARBON	10K	5%	1/6W
R255	1-249-586-11	CARBON	27K	5%	1/4W
R256	1-259-428-11	CARBON	1K	5%	1/6W
R257	1-259-428-11	CARBON	1K	5%	1/6W
R258	1-259-428-11	CARBON	1K	5%	1/6W
R259	1-259-428-11	CARBON	1K	5%	1/6W

Ref.No.	Part No.	Description			
R260	1-247-725-11	CARBON	10K	5%	1/4W
R261	1-247-700-11	CARBON	100	5%	1/4W
R262	1-259-428-11	(US,AEP,UK,E) ...CARBON	1K	5%	1/6W
R263	1-249-586-11	(WG,IT)...CARBON	27K	5%	1/4W
R263	1-259-430-11	(US,AEP,UK,E) ...CARBON	1.2K	5%	1/6W
R264	1-247-700-11	CARBON	100	5%	1/4W
R265	1-259-476-11	CARBON	100K	5%	1/6W
R266	1-259-414-11	CARBON	270	5%	1/6W
R267	1-259-412-11	CARBON	220	5%	1/6W
R268	1-259-500-11	CARBON	1M	5%	1/6W
R269	1-259-468-11	CARBON	47K	5%	1/6W
R270	1-259-460-11	CARBON	22K	5%	1/6W
R271	1-259-468-11	CARBON	47K	5%	1/6W
R273	1-259-452-11	CARBON	10K	5%	1/6W
R274	1-259-452-11	CARBON	10K	5%	1/6W
R275	1-259-452-11	CARBON	10K	5%	1/6W
R276	1-259-446-11	(WG,IT)...CARBON	5.6K	5%	1/6W
R277	1-259-458-11	(WG,IT)...CARBON	18K	5%	1/6W
R301	1-249-504-11	CARBON	10	5%	1/4W
R302	1-259-440-11	CARBON	3.3K	5%	1/6W
R303	1-259-484-11	CARBON	220K	5%	1/6W
R304	1-259-484-11	CARBON	220K	5%	1/6W
R305	1-259-458-11	CARBON	18K	5%	1/6W
R306	1-249-469-11	CARBON	100K	5%	1/4W
R307	1-247-887-00	(US)....CARBON	220K	5%	1/4W
R307	1-249-607-11	(EXCEPT FOR US) ...CARBON	200K	5%	1/4W
R308	1-249-469-11	CARBON	100K	5%	1/4W
R309	1-247-887-00	(US)....CARBON	220K	5%	1/4W
R309	1-249-607-11	(EXCEPT FOR US) ...CARBON	200K	5%	1/4W
R310	1-259-448-11	CARBON	6.8K	5%	1/6W
R311	1-259-452-11	CARBON	10K	5%	1/6W
R313	1-259-456-11	CARBON	15K	5%	1/6W
R314	1-259-452-11	CARBON	10K	5%	1/6W
R318	1-249-516-11	CARBON	33	5%	1/4W
R320	1-249-516-11	CARBON	33	5%	1/4W
R333	1-247-700-11	CARBON	100	5%	1/4W
R335	1-259-452-11	CARBON	10K	5%	1/6W
R336	1-259-476-11	CARBON	100K	5%	1/6W
R337	1-249-526-11	CARBON	82	5%	1/4W
R340	1-259-452-11	CARBON	10K	5%	1/6W
R341	1-249-526-11	CARBON	82	5%	1/4W
R342	1-259-428-11	CARBON	1K	5%	1/6W
R343	1-259-428-11	CARBON	1K	5%	1/6W
R344	1-259-428-11	CARBON	1K	5%	1/6W
R345	1-247-713-11	CARBON	1K	5%	1/4W
R346	1-249-465-11	CARBON	47K	5%	1/4W
R347	1-259-452-11	CARBON	10K	5%	1/6W
R348	1-259-500-11	CARBON	1M	5%	1/6W
R349	1-259-500-11	CARBON	1M	5%	1/6W
R351	1-259-428-11	CARBON	1K	5%	1/6W
R352	1-259-428-11	CARBON	1K	5%	1/6W
R353	1-259-428-11	CARBON	1K	5%	1/6W
R354	1-247-713-11	CARBON	1K	5%	1/4W

www.hifiengine.com

Ref.No.	Part No.	Description			
R355	1-249-465-11	CARBON	47K	5%	1/4W
R356	1-259-468-11	CARBON	47K	5%	1/6W
R401	1-259-452-11	CARBON	10K	5%	1/6W
R402	1-259-436-11	CARBON	2.2K	5%	1/6W
R403	1-259-402-11	CARBON	82	5%	1/6W
R404	1-247-704-11	CARBON	220	5%	1/4W
R405	1-259-442-11	CARBON	3.9K	5%	1/6W
R406	1-259-404-11	CARBON	100	5%	1/6W
R407	1-259-438-11	CARBON	2.7K	5%	1/6W
R408	1-259-452-11	CARBON	10K	5%	1/6W
R409	1-259-452-11	CARBON	10K	5%	1/6W
R410	1-259-420-11	CARBON	470	5%	1/6W
R411	1-247-702-11	CARBON	150	5%	1/4W
R412	1-259-428-11	CARBON	1K	5%	1/6W
R413	1-259-454-11	CARBON	12K	5%	1/6W
R414	1-259-454-11	CARBON	12K	5%	1/6W
R415	1-259-438-11	CARBON	2.7K	5%	1/6W
R416	1-259-446-11	CARBON	5.6K	5%	1/6W
R417	1-259-452-11	CARBON	10K	5%	1/6W
R419	1-259-452-11	CARBON	10K	5%	1/6W
R420	1-259-476-11	CARBON	100K	5%	1/6W
R421	1-259-460-11	CARBON	22K	5%	1/6W
R422	1-259-458-11	CARBON	18K	5%	1/6W
R423	1-259-500-11	CARBON	1M	5%	1/6W
R452	1-259-500-11	(AEP,UK,WG,IT) ...CARBON	1M	5%	1/6W
R453	1-259-436-11	(AEP,UK,WG,IT) ...CARBON	2.2K	5%	1/6W
R454	1-259-428-11	(AEP,UK,WG,IT) ...CARBON	1K	5%	1/6W
R455	1-259-460-11	(AEP,UK,WG,IT) ...CARBON	22K	5%	1/6W
R456	1-259-452-11	(AEP,UK,WG,IT) ...CARBON	10K	5%	1/6W
R457	1-259-476-11	(AEP,UK,WG,IT) ...CARBON	100K	5%	1/6W
R458	1-259-460-11	(AEP,UK,WG,IT) ...CARBON	22K	5%	1/6W
R459	1-259-428-11	(AEP,UK,WG,IT) ...CARBON	1K	5%	1/6W
R501	1-259-424-11	CARBON	680	5%	1/6W
R502	1-259-444-11	CARBON	4.7K	5%	1/6W
R503	1-259-444-11	CARBON	4.7K	5%	1/6W
R504	1-259-428-11	CARBON	1K	5%	1/6W
R505	1-259-416-11	CARBON	330	5%	1/6W
R506	1-259-430-11	CARBON	1.2K	5%	1/6W
R507	1-259-422-11	CARBON	560	5%	1/6W
R508	1-259-422-11	CARBON	560	5%	1/6W
R509	1-259-434-11	CARBON	1.8K	5%	1/6W
R510	1-259-452-11	CARBON	10K	5%	1/6W
R511	1-259-452-11	CARBON	10K	5%	1/6W
R512	1-259-452-11	CARBON	10K	5%	1/6W
R513	1-247-703-11	CARBON	180	5%	1/4W
R514	1-247-704-11	CARBON	220	5%	1/4W
R515	1-259-436-11	CARBON	2.2K	5%	1/6W
R551	1-259-444-11	(AEP,UK,WG,IT) ...CARBON	4.7K	5%	1/6W
R552	1-259-448-11	(AEP,UK,WG,IT) ...CARBON	6.8K	5%	1/6W
R553	1-259-476-11	(AEP,UK,WG,IT) ...CARBON	100K	5%	1/6W
R554	1-259-416-11	(AEP,UK,WG,IT) ...CARBON	330	5%	1/6W
R555	1-259-430-11	(AEP,UK,WG,IT) ...CARBON	1.2K	5%	1/6W
R556	1-259-422-11	(AEP,UK,WG,IT) ...CARBON	560	5%	1/6W
R557	1-259-452-11	(AEP,UK,WG,IT) ...CARBON	10K	5%	1/6W
R601	1-259-492-11	CARBON	470K	5%	1/6W
R602	1-259-428-11	CARBON	1K	5%	1/6W
R603	1-259-452-11	CARBON	10K	5%	1/6W
R604	1-259-452-11	CARBON	10K	5%	1/6W
R605	1-259-452-11	CARBON	10K	5%	1/6W
R606	1-259-452-11	CARBON	10K	5%	1/6W
R607	1-259-452-11	CARBON	10K	5%	1/6W
R608	1-259-452-11	CARBON	10K	5%	1/6W
R609	1-259-452-11	CARBON	10K	5%	1/6W
R610	1-259-452-11	CARBON	10K	5%	1/6W
R611	1-259-452-11	CARBON	10K	5%	1/6W
R612	1-259-460-11	CARBON	22K	5%	1/6W
R613	1-259-460-11	CARBON	22K	5%	1/6W
R614	1-259-460-11	CARBON	22K	5%	1/6W
R615	1-259-460-11	CARBON	22K	5%	1/6W
R616	1-259-460-11	CARBON	22K	5%	1/6W
R617	1-259-460-11	CARBON	22K	5%	1/6W
R618	1-259-440-11	CARBON	3.3K	5%	1/6W
R619	1-259-460-11	CARBON	22K	5%	1/6W
R620	1-259-468-11	CARBON	47K	5%	1/6W
R621	1-247-713-11	CARBON	1K	5%	1/4W
R623	1-259-480-11	CARBON	150K	5%	1/6W
R624	1-259-452-11	CARBON	10K	5%	1/6W
R625	1-259-460-11	CARBON	22K	5%	1/6W
R626	1-249-520-11	CARBON	47	5%	1/4W
R627	1-259-460-11	CARBON	22K	5%	1/6W
R628	1-259-452-11	CARBON	10K	5%	1/6W
R630	1-247-710-11	CARBON	560	5%	1/4W
R632	1-259-476-11	CARBON	100K	5%	1/6W
R633	1-259-452-11	CARBON	10K	5%	1/6W
R634	1-259-468-11	CARBON	47K	5%	1/6W
R635	1-259-460-11	CARBON	22K	5%	1/6W
R636	1-259-460-11	CARBON	22K	5%	1/6W
R651	1-259-428-11	CARBON	1K	5%	1/6W
R652	1-259-428-11	CARBON	1K	5%	1/6W
R653	1-259-412-11	CARBON	220	5%	1/6W
R670	1-259-380-11	CARBON	10	5%	1/6W
R671	1-259-414-11	CARBON	270	5%	1/6W
R672	1-259-468-11	CARBON	47K	5%	1/6W
R675	1-259-460-11	CARBON	22K	5%	1/6W
R676	1-259-452-11	CARBON	10K	5%	1/6W
R677	1-259-476-11	CARBON	100K	5%	1/6W
R678	1-259-460-11	CARBON	22K	5%	1/6W
R679	1-259-380-11	CARBON	10	5%	1/6W
R680	1-259-440-11	CARBON	3.3K	5%	1/6W
R701	1-247-754-11	CARBON	1.5K	5%	1/2W
R703	1-247-714-11	CARBON	1.2K	5%	1/4W
R704	1-247-710-11	CARBON	560	5%	1/4W
R705	1-247-710-11	CARBON	560	5%	1/4W

www.hifiengine.com

Ref.No.	Part No.	Description				
R706	1-247-712-11	CARBON	820	5%	1/4W	
R707	1-247-712-11	CARBON	820	5%	1/4W	
R708	1-249-556-11	CARBON	1.5K	5%	1/4W	
R709	1-247-712-11	CARBON	820	5%	1/4W	
R710	1-247-712-11	CARBON	820	5%	1/4W	
R716	1-259-476-11	CARBON	100K	5%	1/6W	
R726	1-259-452-11	CARBON	10K	5%	1/6W	
R727	1-259-452-11	CARBON	10K	5%	1/6W	
R728	1-259-452-11	CARBON	10K	5%	1/6W	
R801	1-259-462-11	CARBON	27K	5%	1/6W	
R802	1-259-464-11	CARBON	33K	5%	1/6W	
R803	1-259-452-11	CARBON	10K	5%	1/6W	
R804	1-259-460-11	CARBON	22K	5%	1/6W	
R805	1-259-428-11	CARBON	1K	5%	1/6W	
R806	1-259-428-11	CARBON	1K	5%	1/6W	
R808	1-259-428-11	CARBON	1K	5%	1/6W	
R809	1-259-456-11	CARBON	15K	5%	1/6W	
R810	1-259-428-11	CARBON	1K	5%	1/6W	
R811	1-259-404-11	CARBON	100	5%	1/6W	
R812	1-259-476-11	CARBON	100K	5%	1/6W	
R813	1-259-476-11	CARBON	100K	5%	1/6W	
R814	1-259-476-11	CARBON	100K	5%	1/6W	
R815	1-259-476-11	CARBON	100K	5%	1/6W	
R816	1-247-700-11	CARBON	100	5%	1/4W	
R817	1-259-444-11	CARBON	4.7K	5%	1/6W	
R818	1-259-476-11	CARBON	100K	5%	1/6W	
R819	1-259-450-11	CARBON	8.2K	5%	1/6W	
R820	1-259-436-11	CARBON	2.2K	5%	1/6W	
R821	1-259-458-11	CARBON	18K	5%	1/6W	
R822	1-259-454-11	CARBON	12K	5%	1/6W	
R823	1-259-464-11	CARBON	33K	5%	1/6W	
R824	1-247-700-11	CARBON	100	5%	1/4W	
R825	1-259-456-11	CARBON	15K	5%	1/6W	
R826	1-259-449-11	CARBON	7.5K	5%	1/6W	
R902 ⚠	1-212-865-00	FUSIBLE	22	5%	1/4W	F
R903 ⚠	1-212-982-00	FUSIBLE	100	5%	1/2W	F
R904	1-259-468-11	CARBON	47K	5%	1/6W	
R905 ⚠	1-212-889-00	FUSIBLE	220	5%	1/4W	F
R906	1-259-442-11	CARBON	3.9K	5%	1/6W	
R907	1-259-452-11	CARBON	10K	5%	1/6W	
R908	1-247-750-11	CARBON	680	5%	1/2W	
R909	1-259-410-11	CARBON	180	5%	1/6W	
R910	1-259-468-11	CARBON	47K	5%	1/6W	
R971 ⚠	1-202-725-00	(US)...CARBON	3.3M	10%	1/2W	
RT201	1-237-456-11	RES, ADJ, CARBON 1K				
RT202	1-237-460-21	RES, ADJ, CARBON 20K				
RT203	1-237-460-21	RES, ADJ, CARBON 20K				
RT204	1-237-459-21	RES, ADJ, CARBON 10K				
RT205	1-237-463-21	RES, ADJ, CARBON 200K				
RT206	1-237-459-21	RES, ADJ, CARBON 10K				
RT301	1-237-465-11	RES, ADJ, CARBON 1M				
RT302	1-237-465-11	RES, ADJ, CARBON 1M				
RT303	1-237-461-21	RES, ADJ, CARBON 50K				
RT401	1-237-463-21	RES, ADJ, CARBON 200K				
RT402	1-237-461-21	(US,E)...RES, ADJ, CARBON 50K				
RT801	1-237-456-11	RES, ADJ, CARBON 1K				
RY301	1-515-614-11	RELAY				
RY302	1-515-614-11	RELAY				

Ref.No.	Part No.	Description
S601	1-571-333-11	SWITCH, ROTARY (PROGRAM)
S701	1-554-303-21	SWITCH, KEY BOARD (1)
S702	1-554-303-21	SWITCH, KEY BOARD (2)
S703	1-554-303-21	SWITCH, KEY BOARD (3)
S704	1-554-303-21	SWITCH, KEY BOARD (4)
S705	1-554-303-21	SWITCH, KEY BOARD (5)
S706	1-554-303-21	SWITCH, KEY BOARD (6)
S707	1-554-303-21	SWITCH, KEY BOARD (7)
S708	1-554-303-21	SWITCH, KEY BOARD (8)
S709	1-554-303-21	SWITCH, KEY BOARD (9)
S710	1-554-303-21	SWITCH, KEY BOARD (10)
S711	1-554-303-21	SWITCH, KEY BOARD (SHIFT)
S712	1-554-303-21	SWITCH, KEY BOARD (MPX FILTER)
S713	1-554-303-21	SWITCH, KEY BOARD (MEMORY)
S714	1-554-303-21	SWITCH, KEY BOARD (CHECK)
S715	1-554-303-21	SWITCH, KEY BOARD (CAL TONE)
S716	1-554-303-21	SWITCH, KEY BOARD (IF BAND)
S717	1-554-303-21	SWITCH, KEY BOARD (PRESET/TUNING)
S718	1-554-303-21	SWITCH, KEY BOARD (TUNE MODE)
S719	1-554-303-21	SWITCH, KEY BOARD (MUTING)
S720	1-554-303-21	SWITCH, KEY BOARD (FM MODE)
S721	1-554-303-21	SWITCH, KEY BOARD (BAND)
S951 ⚠	1-554-920-11	SWITCH, PUSH (AC POWER)(1 KEY)
S952 ⚠	1-570-307-11	(E)...SWITCH, VOLTAGE CHANGE
TB851	1-537-136-11	(US,E).....TERMINAL BOARD (ANT)
TB851	1-537-155-11	(AEP,UK,WG,IT)...TERMINAL BOARD (ANT)
TH201	1-807-972-11	THERMISTOR
TH202	1-807-970-11	THERMISTOR
TH203	1-808-269-11	THERMISTOR
TH204	1-808-269-11	THERMISTOR
TP201	*1-564-505-11	PLUG, CONNECTOR 2P
TP202	*1-564-505-11	PLUG, CONNECTOR 2P
TP601	*1-564-505-11	PLUG, CONNECTOR 2P
TP602	*1-564-505-11	PLUG, CONNECTOR 2P
XT501	1-567-826-21	VIBRATOR, CRYSTAL
XT601	1-567-772-11	VIBRATOR, CERAMIC

ACCESSORY & PACKING MATERIAL

1-417-090-00	(AEP,UK,WG,IT) ...TRANSFORMER, ANTENNA MATCHING
1-417-141-11	(US,E)...TRANSFORMER, ANTENNA MATCHING
1-501-351-21	ANTENNA, FEEDER
1-501-353-11	ANTENNA, LOOP
1-558-233-11	CORD (WITH CONNECTOR)(SIRCS)4P
1-558-543-11	CORD, CONNECTION
3-701-630-00	BAG, POLYETHYLENE
3-703-450-04	(US)...INSTRUCTION
*3-703-079-21	(UK)...LABEL, CAUTION (BACK)
4-847-802-00	(US,AEP,WG,IT,E)...SCREW
3-786-265-11	(AEP,UK,E)....MANUAL, INSTRUCTION
3-786-265-21	(US).....MANUAL, INSTRUCTION
3-786-265-41	(AEP,WG,IT)...MANUAL, INSTRUCTION
4-908-051-01	(US,AEP,WG,IT,E)...CUSHION
4-915-426-01	(UK).....CUSHION
*4-908-060-82	(UK).....INDIVIDUAL CARTON
*4-915-425-61	(US,AEP,WG,IT)...INDIVIDUAL CARTON
*4-915-425-81	(E).....INDIVIDUAL CARTON

Note:
The components identified by mark ⚠ or dotted line with mark ⚠ are critical for safety. Replace only with part number specified.

Note:
Les composants identifiés par une marque ⚠ sont critiques pour la sécurité.
Ne les remplacer que par une pièce portant le numéro spécifié.

www.hifiengine.com

9-953-824-11

Sony Corporation
Audio Group

Published by A／V Engineering Service Dept.

www.hifiengine.com