TA-F70

US Model
AEP Model
UK Model
PX Model

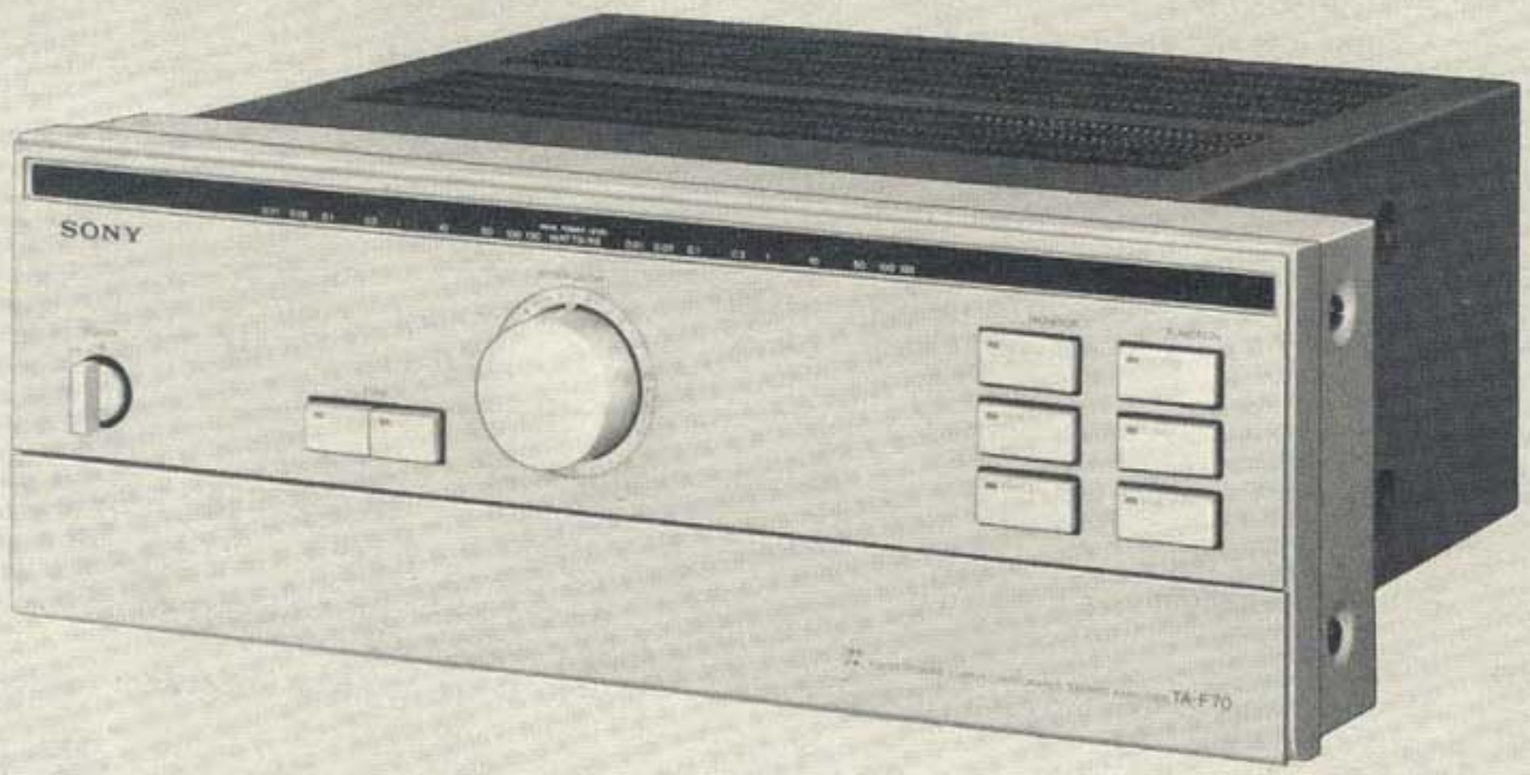

INTEGRATED STEREO AMPLIFIER

SPECIFICATIONS

GENERAL

Power Requirements: 120 V ac, 60 Hz (US model)
220 V ac ~, 50/60 Hz (AEP model)
240 V ac ~, 50/60 Hz (UK model)
110, 120, 220 or 240 V ac, 50/60 Hz (PX model)

Power Consumption: 120 W (US model)
370 W (AEP, PX model)
420 W (UK model)

Dimensions: Approx. 430 (w) x 160 (h) x 410 (d) mm
17 (w) x 6⅜ (h) x 16¼ (d) inches
including projecting parts and controls

Weight: Approx. 8.7 kg, 19 lb 3 oz (net)
Approx. 10.5 kg, 23 lb 3 oz (in shipping carton)

POWER AMPLIFIER SECTION

Power Output and Total Harmonic Distortion: With 8 Ω loads, both channels driven, from 20–20,000 Hz; rated 90 W per channel minimum RMS power, with no more than 0.007 % total harmonic distortion from 250 mW to rated output (US model)

Continuous RMS Power Output: (Less than 0.007 % THD, both channels driven simultaneously)
At 20 Hz–20 kHz
90 W + 90 W (8 Ω)
According to DIN 45500
90 W + 90 W (8 Ω)
(AEP, UK, PX model)

Power Bandwidth (IHF): 5 Hz–30 kHz (45 W output, 0.007 % THD, 8 Ω) (AEP, UK, PX model)

Harmonic Distortion: Less than 0.007 % at rated output
Less than 0.003 % at 10 W output

Intermodulation (IM) Distortion: (60 Hz : 7 kHz = 4 : 1)
Less than 0.007 % at rated output
Less than 0.003 % at 10 W output

— Continued on next page —

SAFETY-RELATED COMPONENT WARNING!!

COMPONENTS IDENTIFIED BY SHADING AND MARK ⚠ ON THE SCHEMATIC DIAGRAMS, EXPLODED VIEWS AND IN THE PARTS LIST ARE CRITICAL TO SAFE OPERATION. REPLACE THESE COMPONENTS WITH SONY PARTS WHOSE PART NUMBERS APPEAR AS SHOWN IN THIS MANUAL OR IN SUPPLEMENTS PUBLISHED BY SONY.

SONY®
SERVICE MANUAL

Residual Noise: Less than 100 μV (8 Ω, network A)

Damping Factor: 100 (8 Ω, 1 kHz)

Outputs: SPEAKER terminals A, B
Accept speakers of 8–16 Ω
HEADPHONES jack
Accepts low and high-impedance stereo headphones

PREAMPLIFIER SECTION

Frequency Response:
PHONO 1, 2 — RIAA equalization curve ±0.2 dB
TUNER, AUX, TAPE 1, 2 — DC–100 kHz $^{+0}_{-1}$ dB

Tone Controls:
BASS
±10 dB at 25 Hz
(turnover frequency 250 Hz)
TREBLE
±10 dB at 50 kHz
(turnover frequency 5 kHz)

Filters:
LOW
12 dB/octave attenuation below 15 Hz
(PHONO 1, 2)

Inputs:

		Sensitivity	Impedance	Maximum input capability (0.007 % distortion, 1 kHz)	S/N (weighting network input level)
PHONO 1, 2	PASS	2.5 mV (–50 dB)	50 kΩ	300 mV (–8.5 dB)	88 dB (A, 2.5 mV)
	40 Ω	0.125 mV (–76 dB)	100 Ω	15 mV (–34 dB)	78 dB (A, 0.25 mV)
	3 Ω	0.125 mV (–76 dB)	33 Ω	15 mV (–34 dB)	78 dB (A, 0.25 mV)
TUNER AUX TAPE 1, 2		150 mV (–14.5 dB)	50 kΩ	———	105 dB (A, 150 mV)

Outputs:
REC OUT 1, 2
Voltage 150 mV (–14.5 dB), (max. 20 V)
Impedance 4.7 kΩ
SPEAKER A, B
Accept speakers of 8–16 Ω
HEADPHONES
Accepts low and high impedance headphones

0 dB = 0.775 V

MODEL IDENTIFICATION
– Specification Label –

US model

SONY®
INTEGRATED STEREO AMPLIFIER
Model NO. TA-F70
AC 120 V 60 Hz 120 W
SERIAL NO.
MADE IN JAPAN

PX1 model

SONY®
INTEGRATED STEREO AMPLIFIER
Model NO. TA-F70
AC110, 120, 220, 240 V ~ 50/60 Hz 370 W
SERIAL NO.
MADE IN JAPAN

AEP model

SONY®
INTEGRATED STEREO AMPLIFIER
Model NO. TA-F70
AC 220 V ~ 50/60 Hz 370 W
SERIAL NO.
MADE IN JAPAN

PX2 model

ASCO
SONY®
INTEGRATED STEREO AMPLIFIER
Model NO. TA-F70
AC110, 120, 220, 240 V ~ 50/60 Hz 370 W
SERIAL NO.
MADE IN JAPAN

UK model

SONY®
INTEGRATED STEREO AMPLIFIER
Model NO. TA-F70
AC 240 V ~ 50/60 Hz 420 W
SERIAL NO.
MADE IN JAPAN

SERVICING NOTE

1. PULSE POWER SUPPLY BOARD REPAIRING

This set has a pulse power-supply circuit which is quite different from a conventional power-supply circuit. The pulse power supply directly retifies and smooths the ac input power to produce the higher dc voltages required in the power supply circuit. When servicing this set, note the following.

a) To prevent unwanted radiation due to pulse signals in the pulse power-supply circuit, the pulse power-supply board is shielded by the aluminum diecast box.

b) The negative circuit of the secondary rectifier in the pulse power-supply circuit is grounded by screws in the aluminum diecast box. When checking the pulse power-supply board out of the box, use a jumperwire and a cardboard insulator as shown on the right.

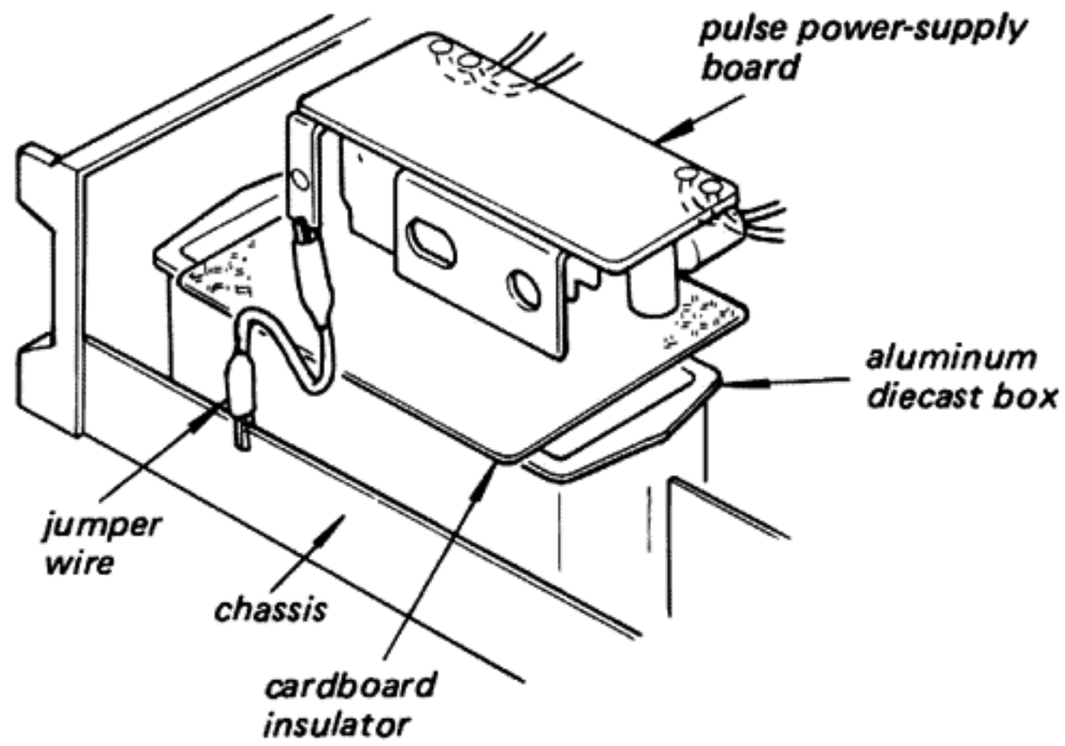

2. Take care that electrolytic capacitor C704 (C705) which is used after the rectification of ac power soure voltage is charged even if the POWER switch is turned off. Be sure to use a resistor of at least several hundred ohms to discharge the capacitor. Direct discharge by means of lead is dangerous.

3. INVERTER CIRCUIT TRANSISTOR REPLACEMENT (Q903–906)

When replacing Q903–Q906 in the pulse power-supply circuit, use those which have the same hFE rank and color code.

US model

Q903–906 2SC1968D-O - - - O (hFE rank)

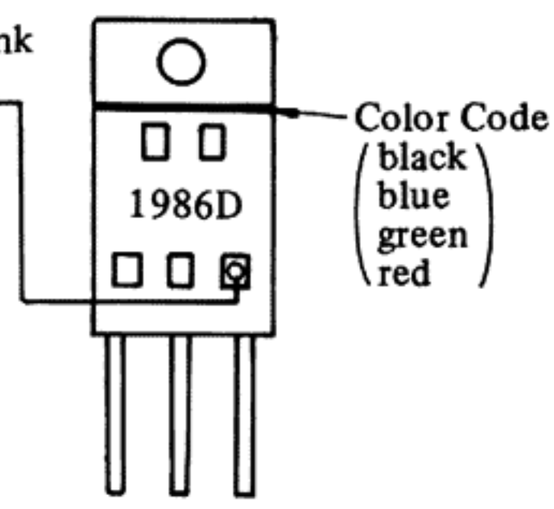

AEP, UK, PX model

Q903, 904 MN8301C - - - O (hFE rank)

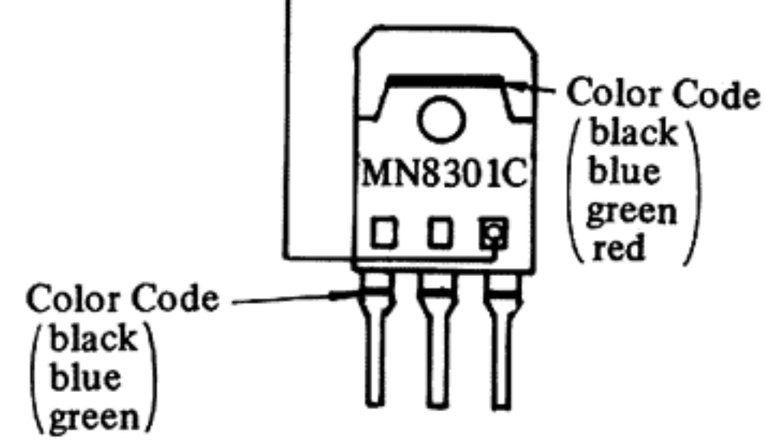

SECTION 1
OUTLINE

1-1. HEAT PIPE

Model TA-F70 uses a heat pipe to dissipate the heat generated by the power transistors. The heat pipe has been developed for use in spacecraft and can absorb heat very well. It is composed of a special fluid under low atmospheric pressure in an airtight container.

The operating principle of the heat pipe is illustrated in Fig. 1. One part of the pipe is the heat input or evaporation section, and the other part is the heat output or condensation section.

As heat is applied to the heat input section, the fluid in that section evaporates and is conveyed to the heat output where it condenses. From there it returns to the heat input section as fluid. This cycle takes place continuously, and allows very rapid heat conduction.

A heat pipe can dissipate heat from a power transistor several hundred times faster than the aluminum or copper of a conventional heat sink. For this reason a heat pipe has a cooling capacity 50 % higher than a heat sink.

Use of a heat pipe also permits the power transistor to be cooled without (detaching it) from the circuit board, and, as a result, the electromagnetic waves generated by the large signal current flowing in the leads are much decreased, and the distortion factor and signal-to-noise ratio of the power amplifier are improved.

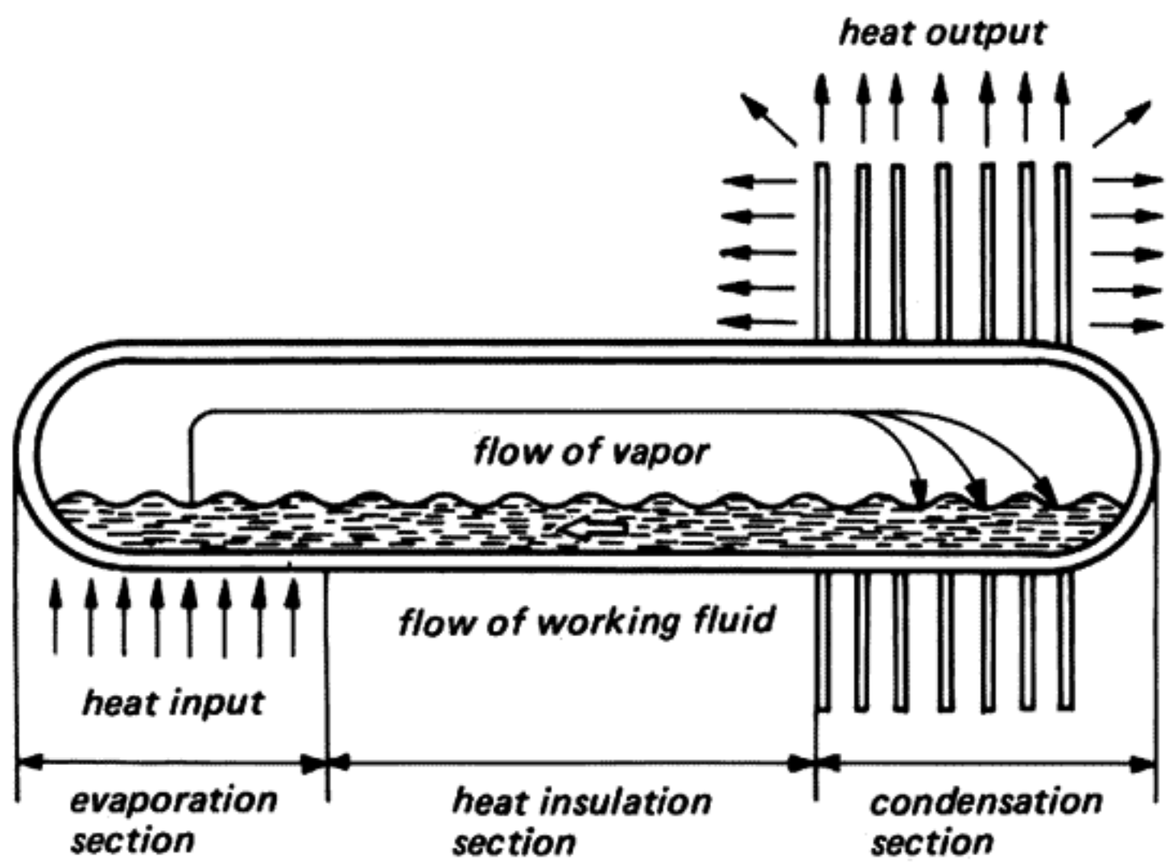

Fig. 1

1-2. LED PEAK LEVEL INDICATOR CIRCUIT

To indicate the output power, the Model TA-F70 uses a peak level indicator consisting of the light-emitting diodes (LEDs). This LED peak level indicator is described below.

1. The input signal is logarithmically compressed in IC820 in accordance with square-law characteristic of diode D821 (D871).

2. The logarithmically compressed input signal is rectified by D822 (D872), and it charges C821 (C871) for peak detection.

3. The charged dc voltage is applied to the terminal ③ (②) of IC821 as the LED-indicator driving signal.

4. IC821 that is used to drive the LED indicator signal is an LSI consisting of 20 dots x 2 channels, and converts the analog signals into the digital signals for each channel. In the Model TA-F70, the power amplifier output is capable of indicating by using 20 LEDs.

5. The termianls (26) and (27) of IC821 are grounded alternately at the intervals of 400 Hz by means of the internal oscillator of IC821. Accordingly, the L-CH and R-CH LEDs are turned on alternately at the intervals of 400 Hz.

6. With the POWER switch turned on, the LED D823 (D873) which indicates the lowest output level is always lit because this cathode is grounded through the resistor.

7. In the IC821, the reference voltage is divided into 20 parts by bleeder resistors, and the 20 divisional voltages are applied as reference voltages to the LED-driving amplifiers.

8. The digital signals are converted back into the analog signals by using 400 Hz signal generated in the internal oscillator at the analog multiplexer, and the signals are applied to the LED-driving amplifiers.

9. The converted signals are compared with the reference voltages in each LED-driving amplifier. If the signal level is lower than the reference voltage, the LED-driving amplifier output becomes high level. Then, the LED is turned off. If the signal level is found to be higher than the reference voltage, the appropriate LED is lit.

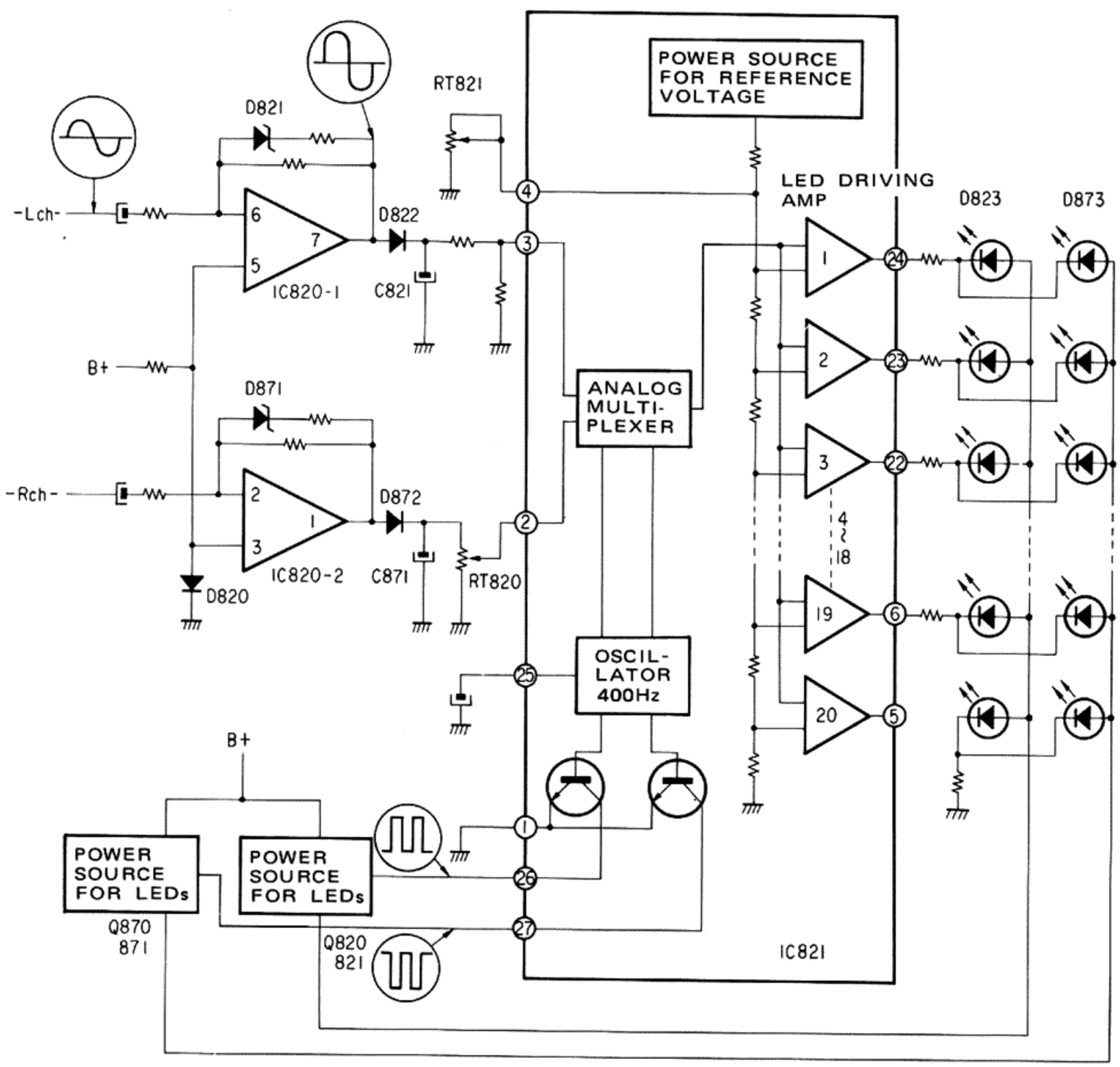

1-3 BLOCK DIAGRAM

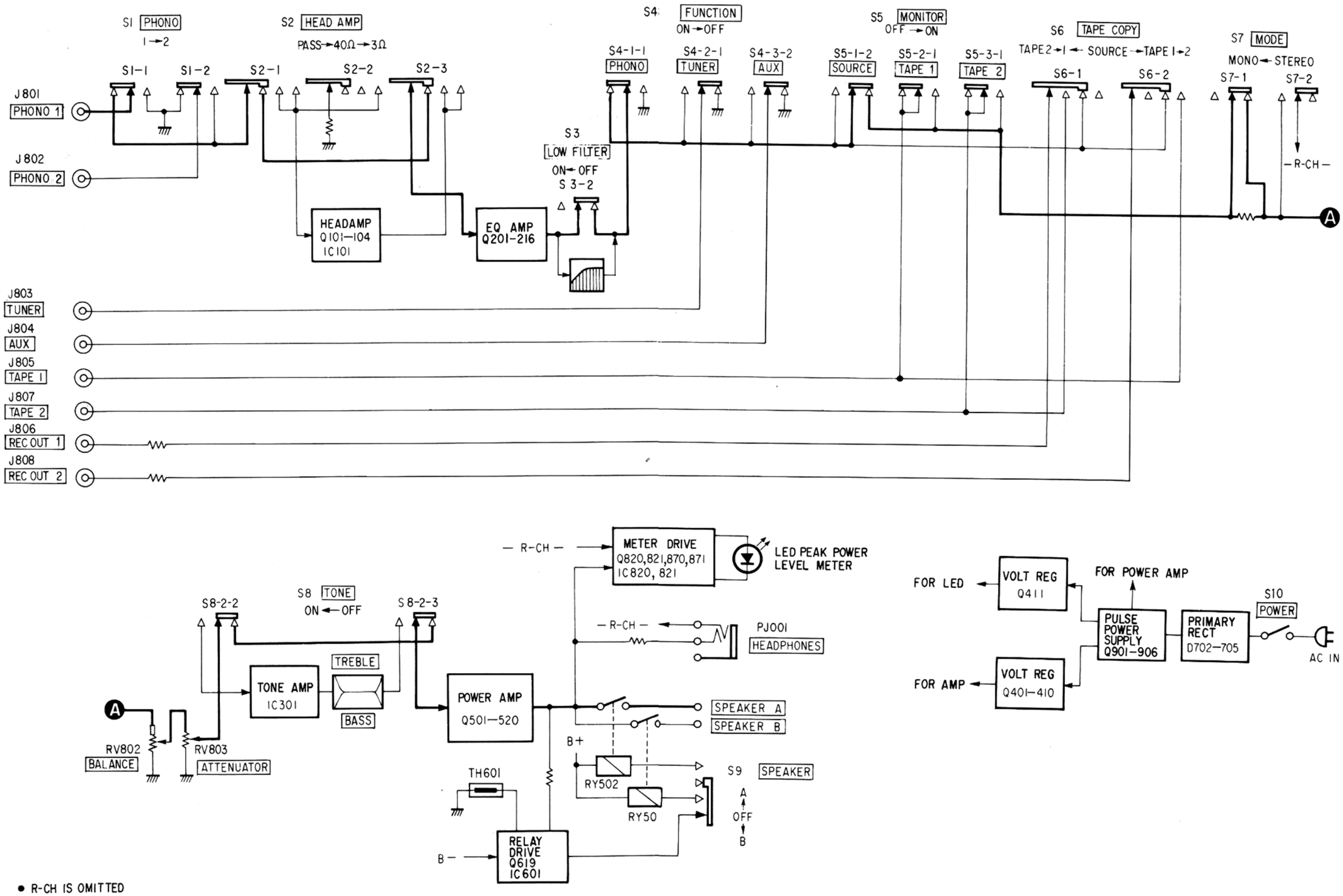

● R-CH IS OMITTED

SECTION 2
DISASSEMBLY

Note: Follow the disassembly procedure in the numerical order given.

Top Covers and Bottom Plate Removal

- Top Cover (S) Removal . . . . . ❶
- Top Cover (L) Removal . . . . . ❷ , ❸
- Bottom Plate Removal . . . . . ❹

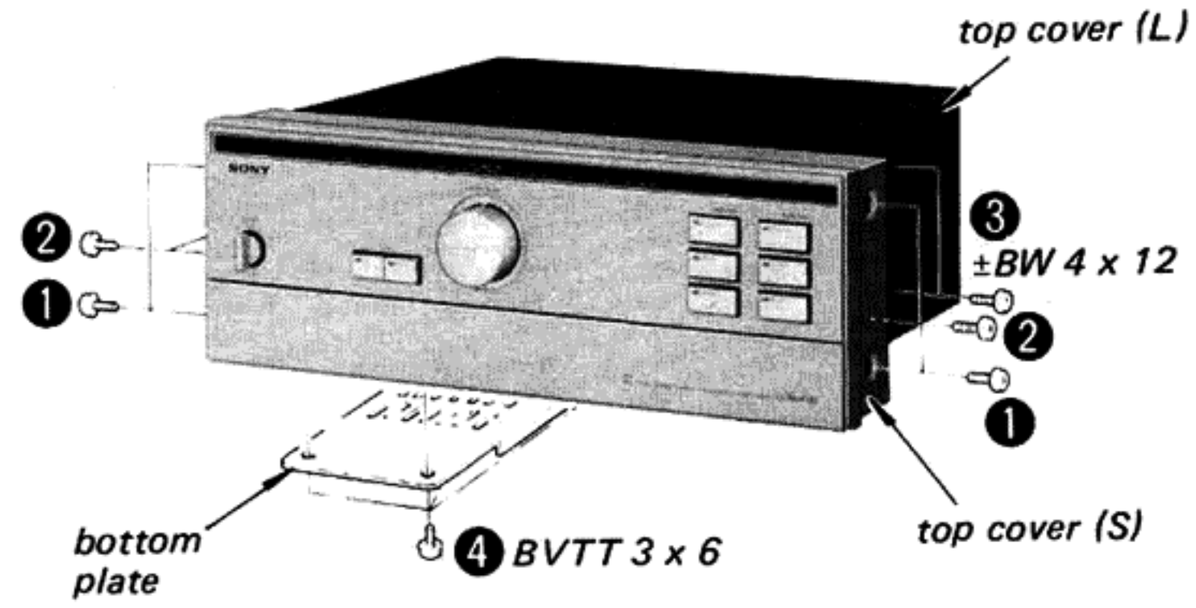

Front Panel Removal

Note: When the set is turned on with the front panel having circuit boards separated from the main chassis, connect them by a jumper wire.

❶ Remove two top covers (big one and small one).

❷ Turn the set up side down.

❸ Lossen the setscrews by using an L-shaped wrench from the bottom with the panel lid half-open and remove the knobs.

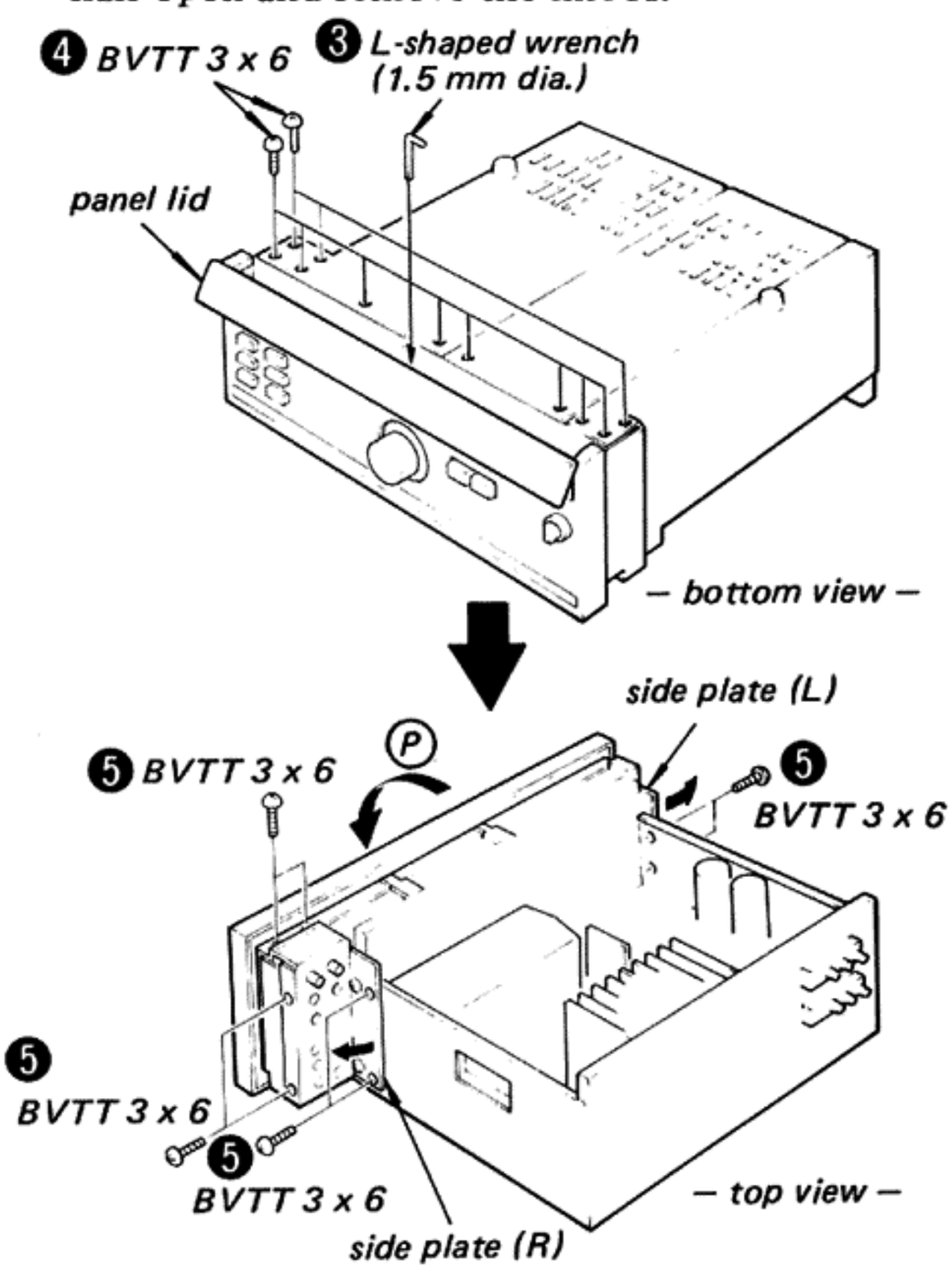

❻ Lay down the front panel block in the direction shown by the arrow Ⓟ with the two side plates slightly open.

❼ Remove the five screws.
(Be careful not to damage the flat cable board.)

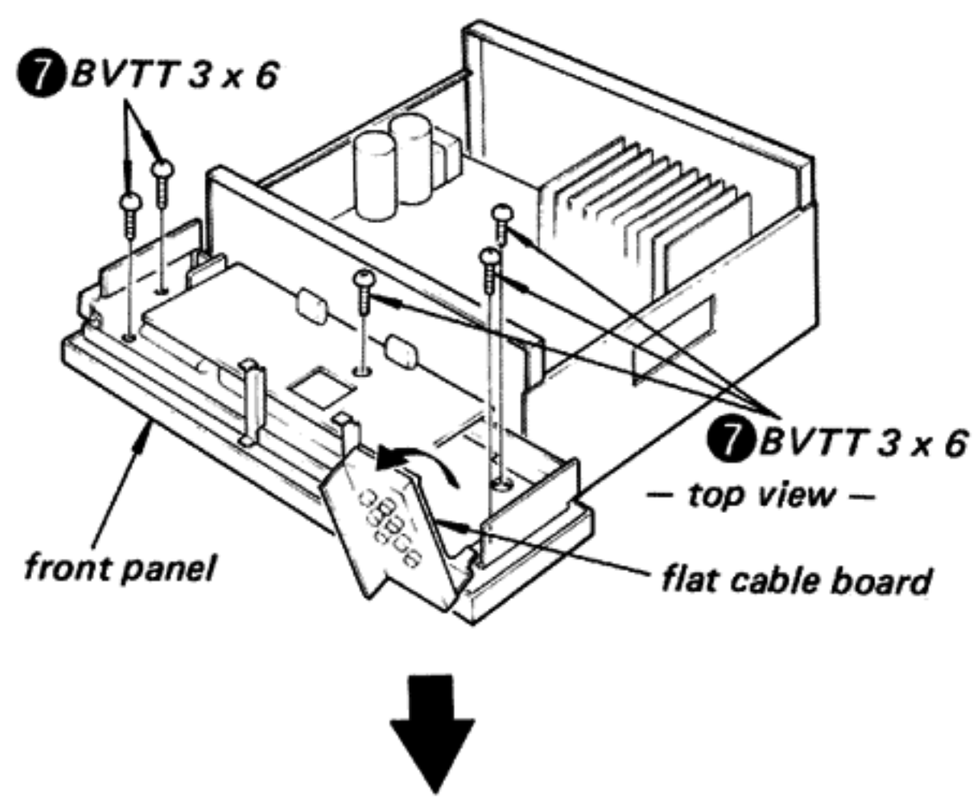

❽ Pull off the front panel from the front sub-chassis.

❾ Raise the front panel as shown.
(Be careful not to pull out the LED lead wires.)

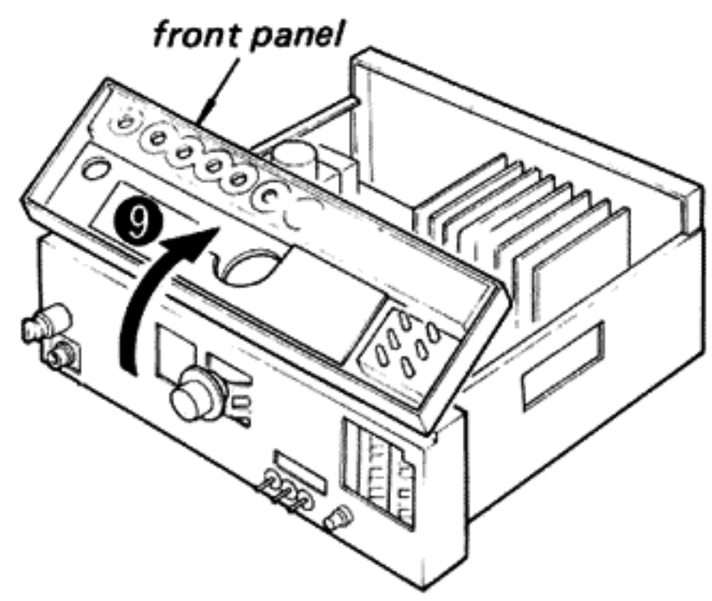

SECTION 3
ADJUSTMENTS

Note: 1. DC BIAS and DC BALANCE adjustments should be made about several minutes later after the POWER switch (S10) is turned on.

2. Repeat DC BIAS and DC BALANCE adjustments two or three times.

3. After replacing the power transistors, DC BIAS and DC BALANCE adjustments should be performed.

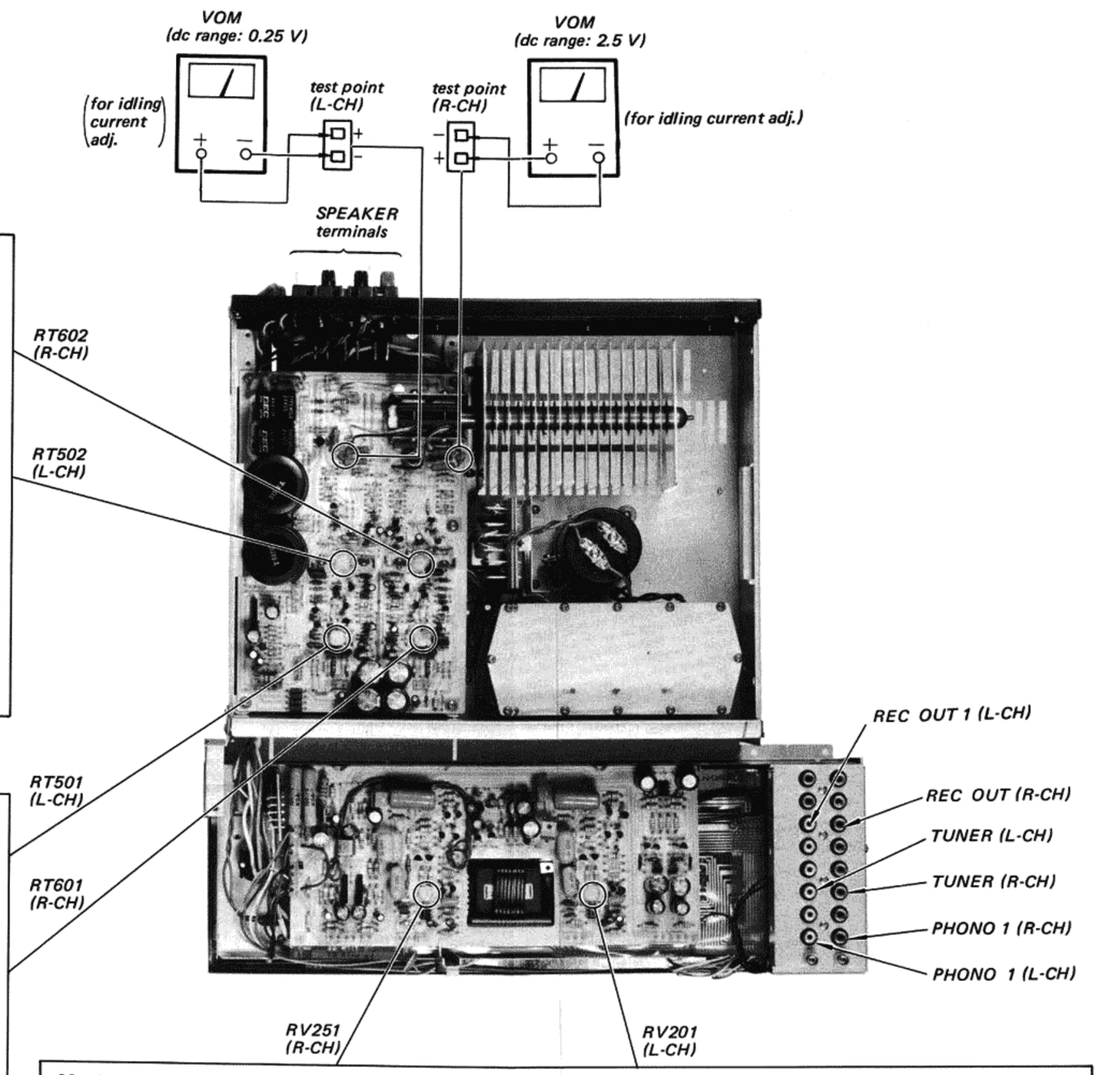

Idling Current Adjustment

Note: Make this adjustment before starting the dc balance adjustment.

Settings:

ATTENUATOR knob:	0 dB
PHONO switch:	1
HEAD AMP switch:	PASS
FUNCTION switch:	PHONO

Procedure:

Adjust RT502 (L-CH) and RT602 (R-CH) so that the VOM reads 8.8 mV dc across the test point (with no signal input and no load).

DC Balance Adjustment

Note: Make this adjustment after completing the idling current adjustment.

Settings:

ATTENUATOR knob:	0 dB
PHONO switch:	1
HEAD AMP switch:	PASS
FUNCTION switch:	PHONO

Procedure:

Adjust RT501 (L-CH) and RT601 (R-CH) so that the VOM reads 0 V dc across the SPEAKER terminal (with no signal input and no load).

Maximum Input Level Adjustment

Settings:

ATTENUATOR knob:	0 dB
PHONO switch:	1
HEAD AMP switch:	PASS
FUNCTION switch:	PHONO

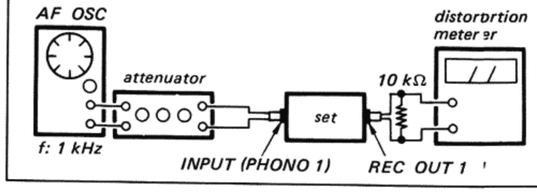

Procedure:

1. Feed a signal of 1 kHz from an af oscillator.
2. Adjust the attenuator for 18 V reading on the distortion meter.
3. Adjust RV201 (L-CH) and RV251 (R-CH) for 0.01 % or less distortion reading on the distortion meter.

LED Meter Adjustment

Settings:

ATTENUATOR knob:	0 dB
PHONO switch:	1
HEAD AMP switch:	PASS
FUNCTION switch:	TUNER

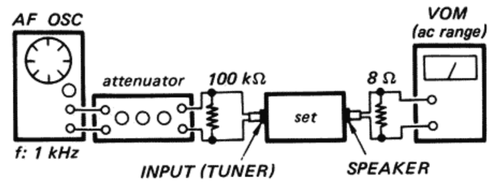

Procedure:

1. Adjust RT821 (L-CH) and RT820 (R-CH) so that the 10 W indicating LED lights darker than the LED located just at the left side of it.
2. Make sure that all LEDs which indicate the output of 30 W and less light when adjusting the attenuator for 15.5 V on the VOM.
3. Make sure that all LEDs which indicate the output of 0.01 W and less light when adjusting the attenator for 0.283 V on the VOM.

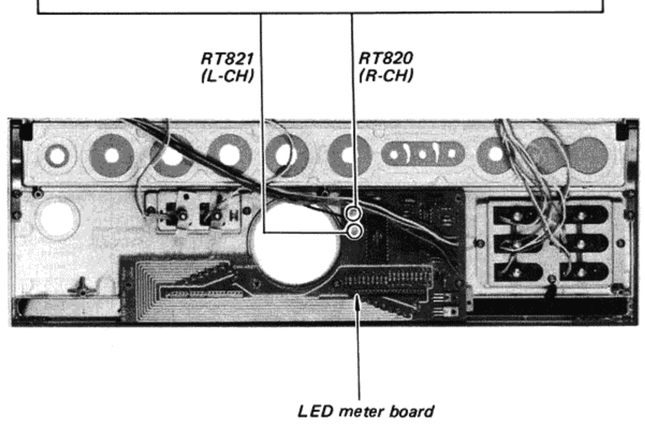

SECTION 4
DIAGRAMS

4-1. MOUNTING DIAGRAM — Power Supply Board and Pulse Power Supply Board —

— Conductor Side —

(AEP, UK model)

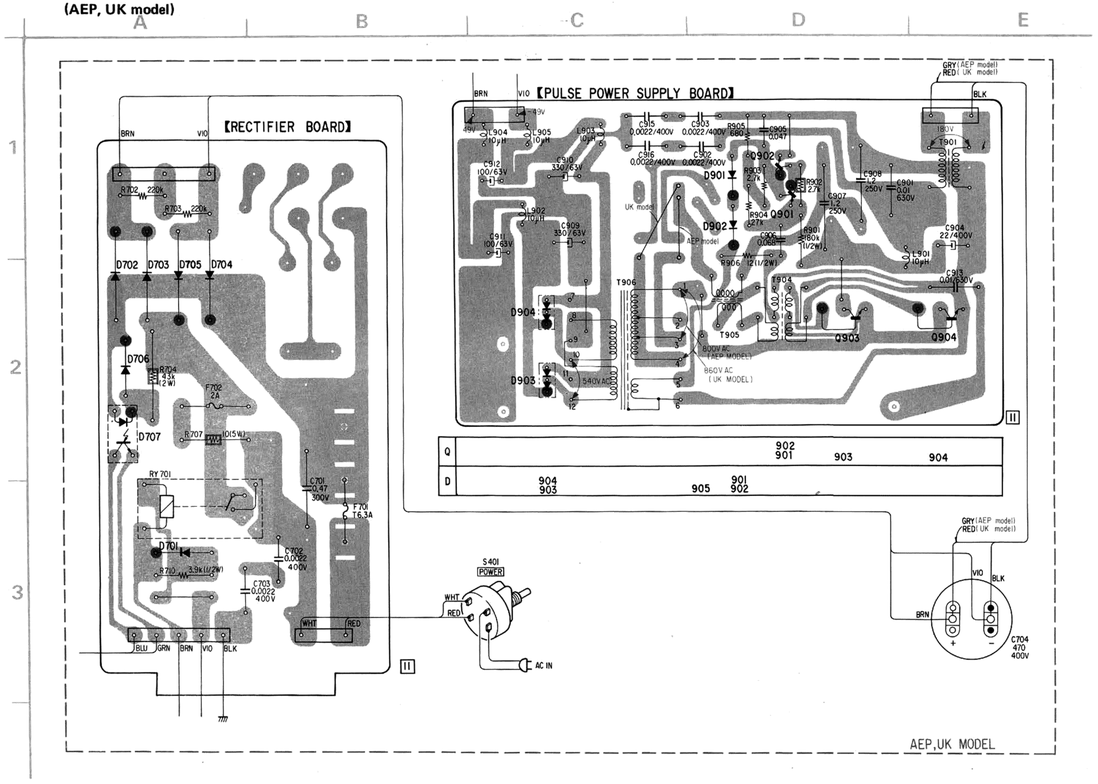

(PX model)

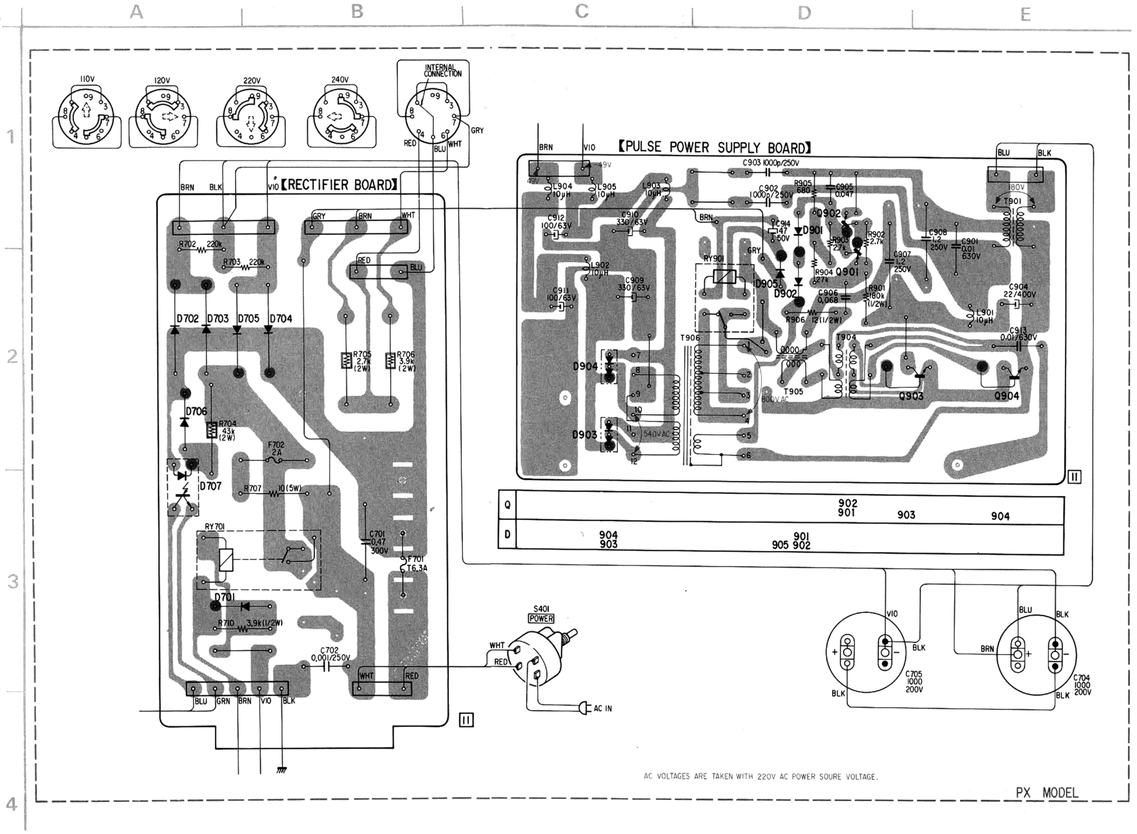

Replacement Semiconductors

For replacement, use semiconductors except in ( ).

Q901: 2SA1027R (2SA678)

Q902: 2SC1364

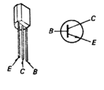

Q903, 904: MN8301C (MN8301)

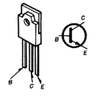

D701, 706, D901, 902: 1S1555

D702–705: U05G (30D4FA)

D707: SPI201

D903, 904: CTU22U

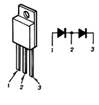

D905: V30N (PX model)

Note: The components identified by shading and mark ⚠ are critical for safety. Replace only with part number specified.

4-2. SCHEMATIC DIAGRAM — Power Supply Board and Pulse Power Supply Board — (AEP, UK model)

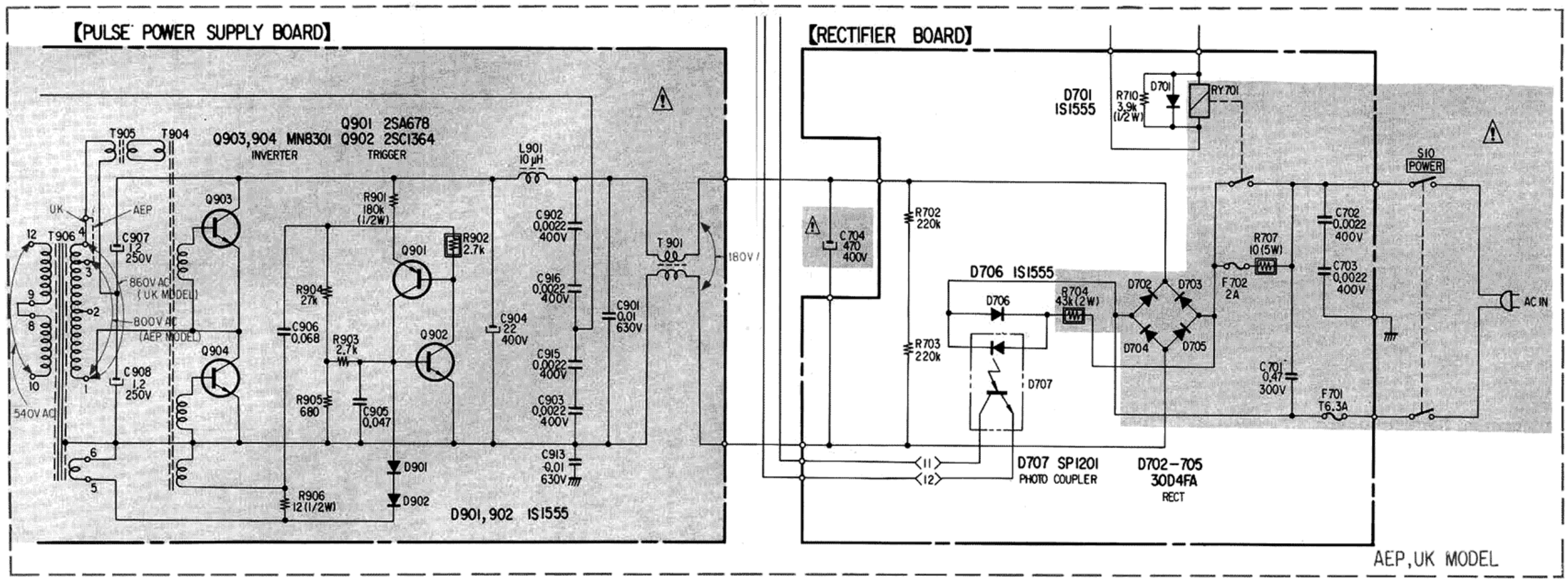

(PX model)

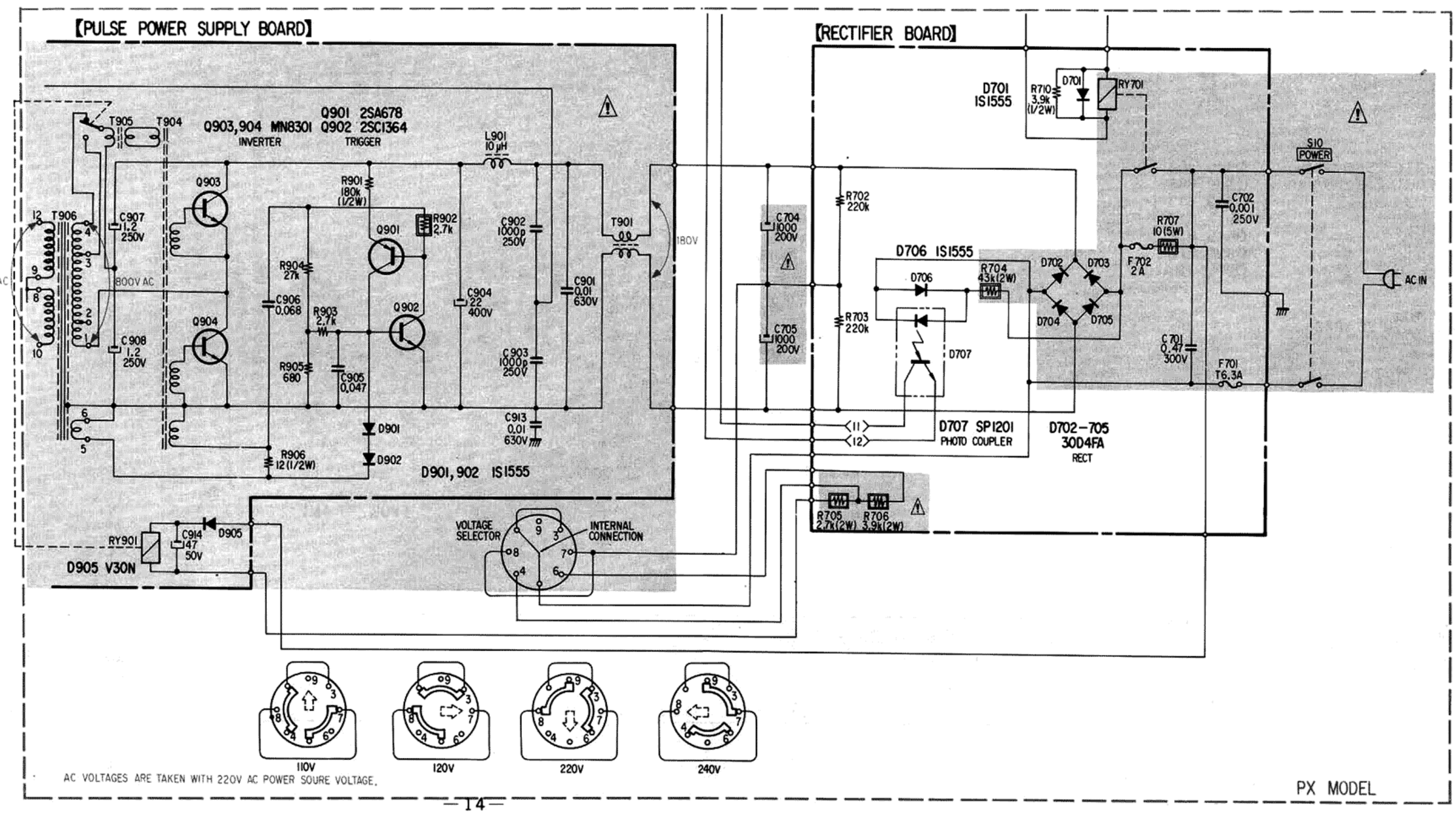

4-3. MOUNTING DIAGRAM

— Conductor Side —

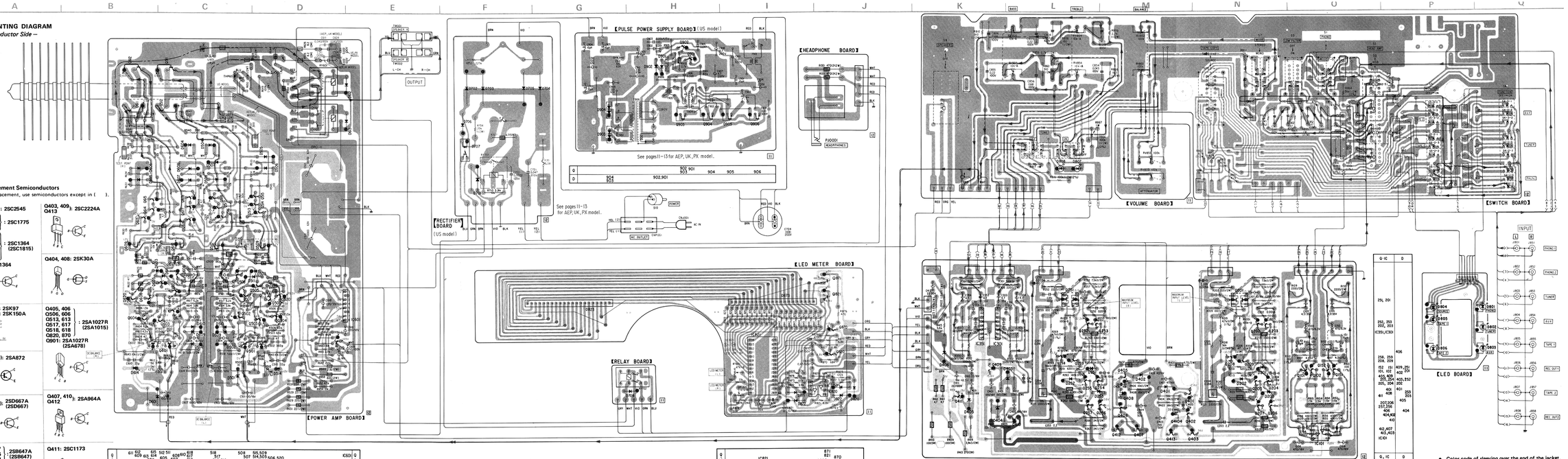

- **Replacement Semiconductors**

For replacement, use semiconductors except in ( ).

Q101, 151, Q102, 252: 2SC2545
Q205, 255
Q208, 258
Q209, 259
Q401, 402
Q502–504
Q602–604
Q514–516
Q614–616
Q619
Q902: 2SC1364
: 2SC1775
: 2SC1364 (2SC1815)

Q403, 409, Q413: 2SC2224A

Q404, 408: 2SK30A

Q201, 251: 2SK97
Q501, 601: 2SK150A

Q405, 406
Q506, 606
Q513, 613
Q517, 617
Q518, 618
Q820, 870
Q901: 2SA1027R (2SA678)
: 2SA1027R (2SA1015)

Q202–204, Q252–254: 2SA872

Q206, 256, Q508, 608: 2SD667A (2SD667)

Q407, 410, Q412: 2SA964A

Q207, 257
Q505, 605
Q507, 607
: 2SB647A (2SB647)

Q411: 2SC1173

Q IC	611 620	615 509	613 502	512 511	605 604	606 603	618 617	616 602	518 517	510,516	508 507	502	505,509	510,503	513 503	504	506,520	619	IC601	Q IC
D	606 605 614	603 611			604 608 607	610 600,609,602			504 507 508	510 509,502,501			505 506 503	501 511		514			602 613	D

Q509, 609, Q821, 871: 2SD669A (2SD669)

Q510, 610: 2SB649A (2SB649)

Q511, 611: 2SC2571

Q512, 612: 2SA1097

Q IC	IC821		871 821 IC820	870 820
D	873	871 872		821 822 820

Q520: 2SA1027R (2SA733)

Q903–906: 2SC1986D (2SC1986) (US model)

Q-IC	D
251, 201	
252, 253 202, 203 IC351,IC301	
258, 259 208, 209	406
452 151 101, 102	409,251 401 402
458,459 401,402 201,204	408,252 402
408 411	401 203 205
207,208 257,258 406 404,402 410	405 404
452,407 402,403 IC101	
Q, IC	D

Note:

- ●—: parts extracted from the component side.
- ●—: parts extracted from the conductor side.
- ■ : part mounted on the conductor side.
- Readings are taken under no-signal conditions with a VOM (20 kΩ/V).

: B+ pattern
: B− pattern

Signal Path
—▶ L-CH
- -▶ R-CH

- Color code of sleeving over the end of the jacket.

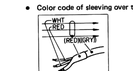

4-4. SCHEMATIC DIAGRAM

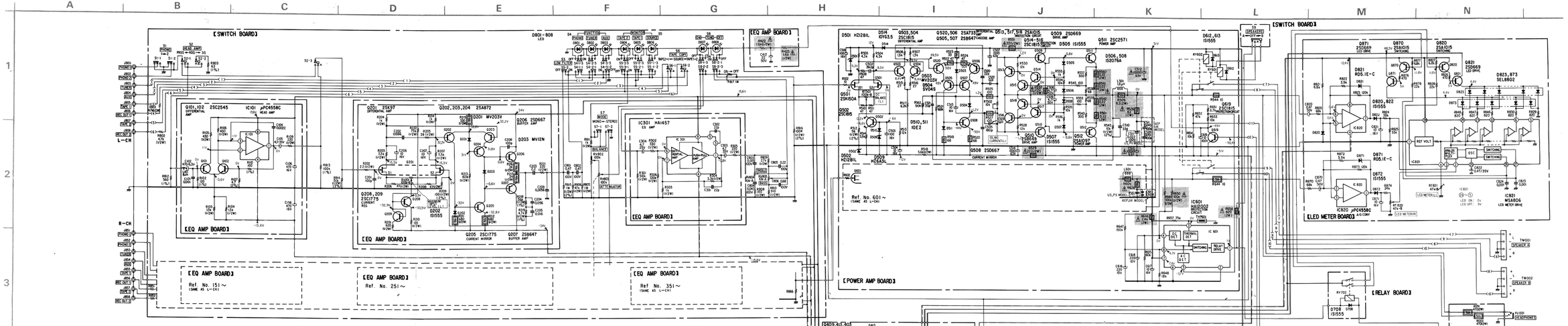

- **Replacement Semiconductors**

For replacement, use semiconductors except in ( ).

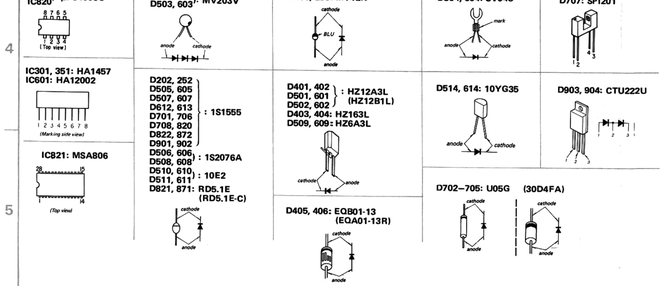

Note:

- All capacitors are in μF unless otherwise noted. pF : μμF 50WV or less are not indicated except for electrolytics and tantalum.
- All resistors are in ohms, ¼W unless otherwise noted. kΩ : 1000 Ω, MΩ : 1000 kΩ
- ▭ : nonflammable resistor.
- ▭ : panel designation.
- ▭ : adjustment for repair.
- Readings are taken under no-signal conditions with a VOM (20 kΩ/V).
- ——— : B+ bus.
- ——— : B− bus.
- Switches

Ref. No.	Switch	Position	Ref. No.	Switch	Position
S1	PHONO	1	S6	TAPE COPY	SOURCE
S2	HEAD AMP	40 Ω	S7	MODE	STEREO
S3	LOW FILTER	OFF	S8	TONE	OFF
S4	FUNCTION	PHONO	S9	SPEAKERS	B
S5	MONITOR	SOURCE ON	S10	POWER	OFF

Note: The components identified by shading and mark ⚠ are critical for safety. Replace only with part number specified.

SECTION 5
EXPLODED VIEWS

A B C

1 2 3 4 5

5-1.

Note:

- Items with no part number and/or no description are not stocked because they are seldom required for routine service.
- All screws are Phillips (cross recess) type unless otherwise noted.
  (-) = slotted head
- Circled letters (Ⓐ to Ⓩ) are applicable to European models only.

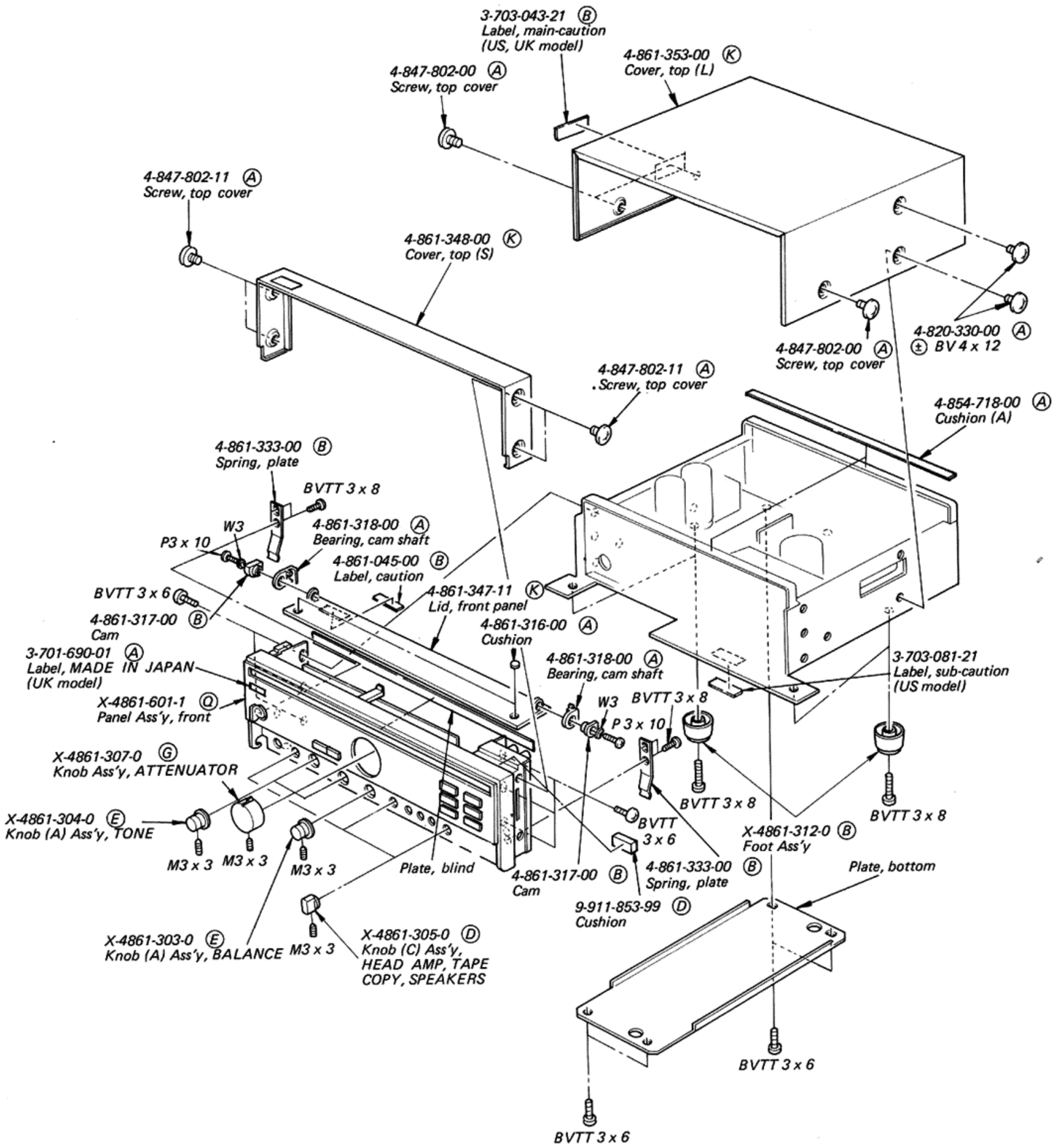

Note:

- Items with no part number and/or no description are not stocked because they are seldom required for routine service.
- All screws are Phillips (cross recess) type unless otherwise noted.
  (–) = slotted head
- Circled letters (Ⓐ to Ⓩ) are applicable to European models only.

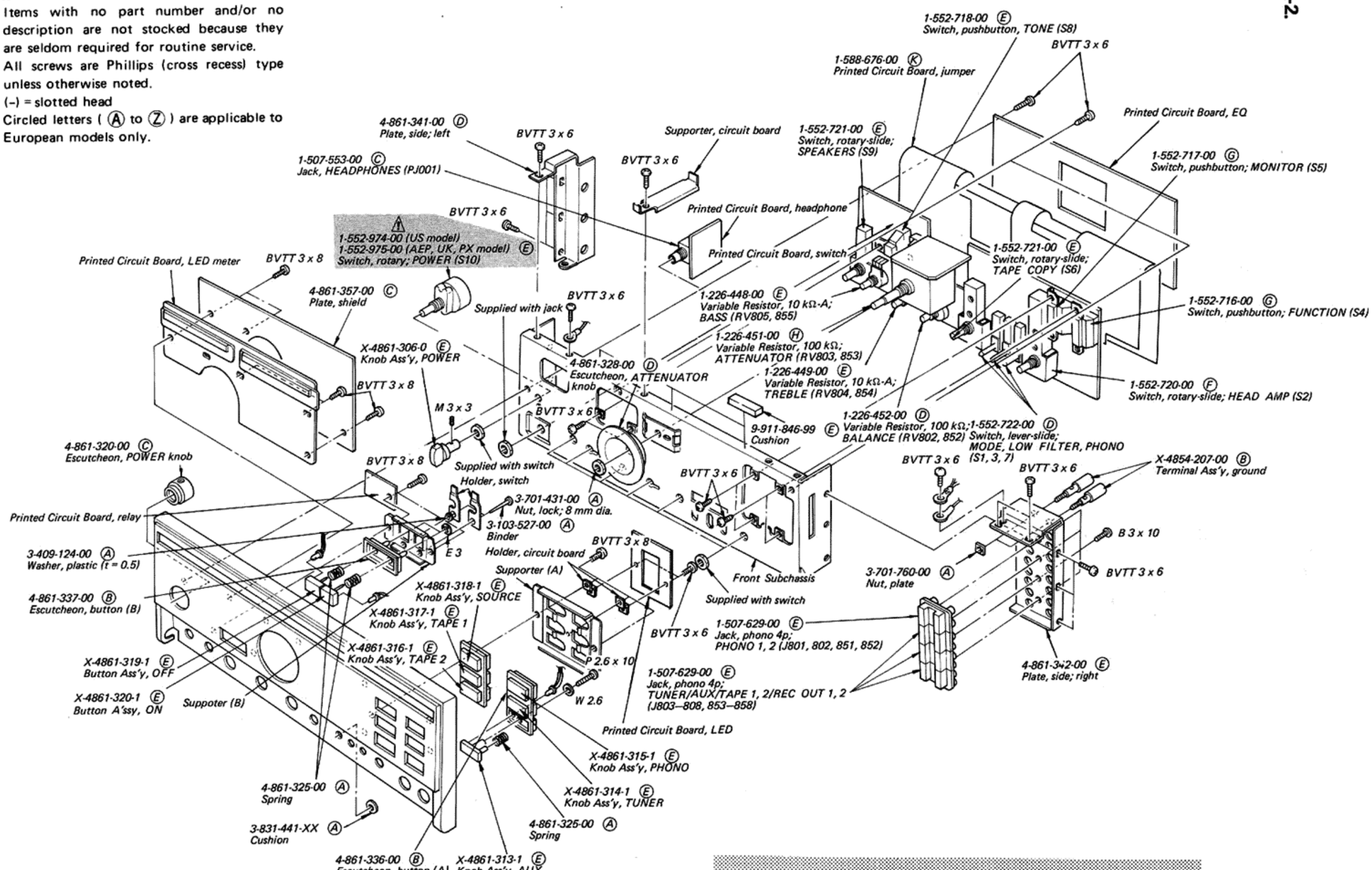

Note: The components identified by shading and mark ⚠ are critical for safety. Replace only with part number specified.

5-3.

Note:

- Items with no part number and/or no description are not stocked because they are seldom required for routine service.
- All screws are Phillips (cross recess) type unless otherwise noted.
  (-) = slotted head
- Circled letters (Ⓐ to Ⓩ) are applicable to European models only.

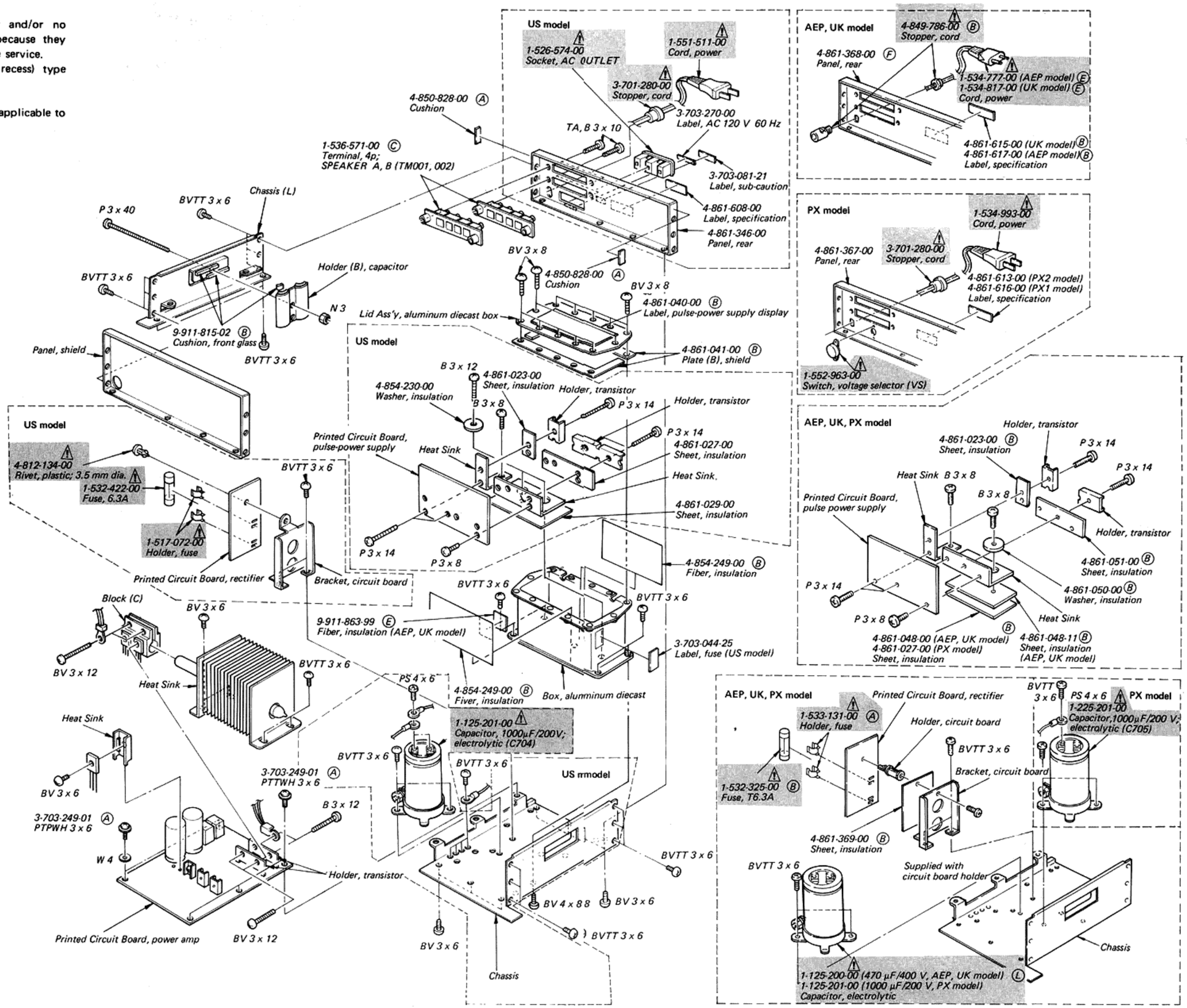

Note: The components identified by shading and ⚠ mark ⚠ are critical for safety. Replace only with part number specified.

SECTION 6
ELECTRICAL PARTS LIST

Note: Circled letters (Ⓐ to Ⓩ) are applicable to European models only.

Ref. No.	*Part No.*	*Description*
	SEMICONDUCTORS	
	Transistors	
Q101, 151, Q102, 152	8-729-354-52	Ⓔ 2SC2545
Q201, 251	8-765-342-10	Ⓕ 2SK97
Q202, 252 … Q204, 254	8-729-387-28	Ⓑ 2SA872
Q205, 255	8-729-377-58	Ⓑ 2SC1775
⇒Q206, 256	8-729-306-72	Ⓑ 2SD667A
⇒Q207, 257	8-729-300-72	Ⓑ 2SB647A
Q208, 258, Q209, 259	8-729-377-58	Ⓑ 2SC1775
⇒Q401, 402	8-729-663-47	Ⓒ 2SC1364
Q403	8-729-122-43	Ⓒ 2SC2224A
Q404	8-729-203-04	Ⓑ 2SK30A
⇒Q405, 406	8-729-612-77	Ⓑ 2SA1027R
Q407	8-729-196-43	Ⓒ 2SA964A
Q408	8-729-203-04	Ⓑ 2SK30A
Q409	8-729-122-43	Ⓒ 2SC2224A
Q410	8-729-196-43	Ⓒ 2SA964A
Q411	8-729-217-33	Ⓒ 2SC1173
Q412	8-729-196-43	Ⓒ 2SA964A
Q413	8-729-122-43	Ⓒ 2SC2224A
Q501, 601	8-729-215-12	Ⓔ 2SK150A
⇒Q502, 602 … ⇒Q504, 604	8-729-663-47	Ⓒ 2SC1364
⇒Q505, 605	8-729-300-72	Ⓑ 2SB647A
⇒Q506, 606	8-729-612-77	Ⓑ 2SA1027R
⇒Q507, 607	8-729-300-72	Ⓑ 2SB647A
⇒Q508, 608	8-729-306-72	Ⓑ 2SD667A
⇒Q509, 609	8-729-306-92	Ⓒ 2SD669A
⇒Q510, 610	8-729-304-92	Ⓒ 2SB649A
Q511, 611	8-729-371-22	Ⓖ 2SC2571
Q512, 612	8-729-397-22	Ⓘ 2SA1097
⇒Q513, 613	8-729-612-77	Ⓑ 2SA1027R
⇒Q514, 614 … ⇒Q516, 616	8-729-663-47	Ⓒ 2SC1364
Q517, 617, Q518, 618	8-729-612-77	Ⓑ 2SA1027R
⇒Q520	8-729-612-77	Ⓑ 2SA1027R
⇒Q619	8-729-663-47	Ⓒ 2SC1364
⇒Q820, 870	8-729-612-77	Ⓑ 2SA1027R
⇒Q821, 871	8-729-306-92	Ⓒ 2SD669A
⇒Q901	⚠8-729-612-77	Ⓑ 2SA1027R
Q902	⚠8-729-663-47	Ⓒ 2SC1364
⇒Q903–906	⚠8-729-308-72	2SC1986D (US model)
⇒Q903, 904	⚠8-729-384-31	Ⓕ MN8301C (AEP, UK, PX model)
	ICs	
IC101	8-759-145-58	Ⓓ μPC4558C
IC301, 351	8-759-341-57	Ⓒ HA1457
IC601	8-759-320-02	Ⓓ HA12002
IC820	8-759-145-58	Ⓓ μPC4558C
IC821	8-759-986-00	Ⓛ MSA806
	Diodes	
D201, 251	8-719-920-30	Ⓑ MV203V
D202, 252	8-719-815-55	Ⓑ 1S1555
D203, 253	8-719-912-00	Ⓑ MV12N
⇒D401, 402	8-719-910-23	Ⓑ HZ12A3L
D403, 404	8-719-901-63	Ⓑ HZ16-3L
⇒D405, 406	8-719-931-13	Ⓑ EQB01-13
⇒D501, 601, D502, 602	8-719-910-23	Ⓑ HZ12A3L
D503, 603	8-719-920-30	Ⓑ MV203V
D504, 604	8-719-300-11	Ⓒ SV04S
D505, 605	8-719-815-55	Ⓑ 1S1555
D506, 606	8-719-923-76	Ⓑ 1S2076A
D507, 607	8-719-815-55	Ⓑ 1S1555
D508, 608	8-719-923-76	Ⓑ 1S2076A
D509, 609	8-719-910-63	Ⓑ HZ6A3L
D510, 610, D511, 611	8-719-200-02	Ⓑ 10E2
D514, 614	8-719-210-35	Ⓑ 10Y3.5
D612, 613	8-719-815-55	Ⓑ 1S1555
D701	8-719-815-55	Ⓑ 1S1555

⇒: Due to standardization, interchangeable replacements may be substituted for parts specified in the diagrams.

Note: The components identified by shading and mark ⚠ are critical for safety. Replace only with part number specified.

Note: Circled letters (Ⓐ to Ⓩ) are applicable to European models only.

Ref. No.	Part No.	Descirption
⇒D702–705	⚠8-719-911-55	Ⓑ U05G
D706	8-719-815-55	Ⓑ 1S1555
D707	8-719-902-01	Ⓓ SPI201
D708	8-719-815-55	Ⓑ 1S1555
D801–808	1-518-360-00	Ⓒ LED
D820	8-719-815-55	Ⓑ 1S1555
⇒D821, 871	8-719-151-77	Ⓑ RD5.1E
D822, 872	8-719-815-55	Ⓑ 1S1555
D823, 873	8-719-388-02	Ⓚ SEL8802
D901, 902	⚠8-719-815-55	Ⓑ 1S1555
D903, 904	⚠8-719-300-22	Ⓓ CTU22U
D905	⚠8-719-903-99	V30N (PX model)

COILS AND TRANSFORMERS

L101, 151	1-407-519-00	Ⓑ Microinductor
L901–905	⚠1-421-329-00	Ⓑ 10μH, coil
T901	⚠1-421-328-11	Line Filter (US, Canadian model)
T901	⚠1-421-340-00	Ⓑ Line Filter (AEP, UK, PX model)
T902, 903	⚠1-543-100-00	Core (US, Canadian model)
T904, 905	⚠1-543-100-00	Ⓑ Core
T906	⚠1-446-332-00	Transformer, converter (US model)
T906	⚠1-446-389-00	Ⓛ Transformer, converter (AEP, UK, PX model)

CAPACITORS

All capacitors are in μF and ceramic unless otherwise noted.
50WV or less are not indicated except for electrolytics.
pF : μμF, elect : electrolytic

Ref. No.	Part No.	Description		
C101, 151	1-101-001-00	Ⓐ 0.001		
C102, 152	1-123-452-00	Ⓑ 470	6.3V	elect
C104, 154	1-101-002-00	Ⓐ 0.0022		
C105, 155	1-123-453-00	Ⓑ 4.7	35V	elect
C106, 156	1-121-426-00	Ⓑ 470	16V	elect
C201, 251	1-107-085-00	Ⓑ 100p		mica
C202, 252	1-130-131-00	Ⓑ 0.0016		film
C203, 253	1-130-208-00	Ⓔ 2.2		film
C204, 254	1-104-142-00	Ⓓ 0.056		styrol
C205, 255	1-104-141-00	Ⓒ 0.016		styrol
C206, 256 C207, 257	1-121-651-00	Ⓐ 10	16V	elect
C208, 258	1-102-973-00	Ⓐ 100p		
C209, 259	1-103-743-00	Ⓑ 0.0056		styrol
C301, 351 C302, 352	1-102-959-00	Ⓐ 22p		
C303, 353	1-123-453-00	Ⓑ 4.7	35V	elect
C304, 354	1-121-395-00	Ⓑ 4.7	25V	elect
C401, 402	1-121-415-00	Ⓑ 100	16V	elect
C403, 404	⚠1-121-417-00	Ⓑ 100	50V	elect
C405, 406	1-102-947-00	Ⓐ 10p		
C407, 408	1-121-409-00	Ⓑ 47	16V	elect
C409, 410	1-121-479-00	Ⓑ 22	16V	elect
C410	⚠1-124-479-00	Ⓑ 22	16V	elect
C411	1-121-996-00	Ⓑ 22	100V	elect
C412	1-121-152-00	Ⓑ 22	50V	elect
C413	1-102-947-00	Ⓐ 10p		
C501, 601	1-121-415-00	Ⓑ 100	16V	elect
C502, 602	1-107-231-00	Ⓑ 360p		mica
C503, 603	1-121-415-00	Ⓑ 100	16V	elect
C504, 604	1-121-651-00	Ⓑ 10	16V	elect
C505, 605	1-107-091-00	Ⓑ 180p		mica
C507, 607	1-123-262-00	Ⓑ 1000	63V	elect
C508, 608 C509, 609	1-121-396-00	Ⓑ 4.7	50V	elect
C510, 610	1-107-073-00	Ⓑ 33p		mica
C511, 611	1-130-213-00	Ⓑ 0.043	100V	film (AEP, UK model)
C511, 611	1-130-212-00	0.022	100V	film (US, PX model)
C512, 513	⚠1-125-187-00	Ⓚ 10000 x 2 (block type)	63V	elect
C514, 614	1-123-262-00	Ⓑ 1000	63V	elect
C515, 615	1-121-651-00	Ⓑ 10	16V	elect
C520	1-102-959-00	Ⓐ 22p		
C521, 621	1-107-068-00	Ⓑ 20p		mica
C522, 622 C523, 623	1-108-239-00	Ⓑ 0.01		mylar
C616	1-121-420-00	Ⓑ 220	10V	elect
C617	1-121-651-00	Ⓑ 10	16V	elect
C618	1-121-420-00	Ⓑ 220	10V	elect
C619	1-121-126-00	Ⓑ 10	100V	elect
C622, 623	1-108-579-00	Ⓑ 0.01		mylar

⇒: Due to standardization, interchangeable replacements may be substituted for parts specified in the diagrams.

Note: The components identified by shading and mark ⚠ are critical for safety. Replace only with part number specified.

Note: Circled letters (Ⓐ to Ⓩ) are applicable to European models only.

Ref. No.	Part No.		Description		
C701	⚠1-130-234-00		0.047	300 V	film (US model)
C701	⚠1-130-342-00	Ⓒ	0.47	300 V	film (AEP, UK, PX model)
C702	⚠1-102-222-00		0.001	250 V	(PX model)
C702	⚠1-161-515-00		0.0022	125 V	(US model)
C702, 703	⚠1-161-734-00	Ⓑ	0.0022	400 V	(AEP, UK model)
C704	⚠1-125-200-00	Ⓛ	470	400 V	elect (AEP, UK model)
C704	⚠1-125-201-00		1000	200 V	elect (US, PX model)
C705	⚠1-125-201-00		1000	200 V	elect (PX model)
C801, 851 C802, 852	1-130-086-00	Ⓑ	0.47	100 V	film
C803, 853	1-130-210-00	Ⓑ	0.015	100 V	film
C804, 854	1-130-213-00	Ⓑ	0.043	100 V	film
C805, 855	1-130-085-00	Ⓑ	0.22	100 V	film
C806, 856	1-130-220-00	Ⓒ	0.68	100 V	film
C820, 870	1-121-726-00	Ⓑ	0.47	50 V	elect
C821, 871	1-121-651-00	Ⓑ	10	16 V	elect
C822	1-131-213-00	Ⓑ	0.47	35 V	tantalum
C823, 824	1-102-074-00	Ⓐ	0.001		
C901	⚠1-130-141-00	Ⓑ	0.01	630 V	film
C902, 903	⚠1-102-222-00		1000p	250 V	(PX model)
C902, 903	⚠1-161-516-00		0.001	125 V	(US model)
C902, 903	⚠1-161-734-00	Ⓑ	0.0022	400 V	(AEP, UK model)
C904	⚠1-123-401-00		47	200 V	elect (US model)
C904	⚠1-123-402-00	Ⓒ	22	400 V	elect (AEP, UK, PX model)
C905	⚠1-108-595-00	Ⓑ	0.047		mylar
C906	⚠1-108-599-00	Ⓑ	0.068		mylar
C907, 908	⚠1-130-358-00		1.2	250 V	film (AEP, UK, PX model)
C907, 908	⚠1-123-539-00		4.7	200 V	elect (US model)
C909, 910	⚠1-123-376-00	Ⓒ	330	63 V	elect
C911, 912	⚠1-123-374-00	Ⓑ	100	63 V	elect
C913	⚠1-130-141-00	Ⓑ	0.01	630 V	film
C914	⚠1-123-359-00		47	50 V	elect (PX model)
C915, 916	⚠1-161-734-00	Ⓑ	0.0022	400 V	(AEP, UK model)

Note: The components identified by shading and mark ⚠ are critical for safety. Replace only with part number specified.

Ref. No.	Part No.		Description		

RESISTORS

All resistors in ohms. Common ¼ W carbon resistros are omitted. Refer to the list on page 32 for the their part numbers. (kΩ: 1000 Ω, MΩ: 1000 kΩ)

R001, 051	1-206-656-00	Ⓑ	470	2 W	metal oxide (nonflammable)
R102, 152	1-214-110-00	Ⓐ	120	¼ W (1 %)	metal oxide
R103, 153 R104, 154	1-244-877-00	Ⓐ	1.5 k	½ W	carbon
R105, 155 R106, 156	1-244-864-00	Ⓐ	430	½ W	carbon
R107, 157	1-214-611-00	Ⓐ	4.7	¼ W (2 %)	metal oxide
R109, 159	1-244-857-00	Ⓐ	220	½ W	carbon
R110, 160	1-214-615-00	Ⓐ	100	¼ W (1 %)	metal oxide
R201, 251	1-244-868-00	Ⓐ	620	½ W	carbon
R202, 252	1-244-833-00	Ⓐ	22	½ W	carbon
R203, 253	1-244-894-00	Ⓐ	7.5 k	½ W	carbon
R204, 254	1-244-873-00	Ⓐ	1 k	½ W	carbon
R205, 255	1-244-831-00	Ⓐ	39	½ W	carbon
R206, 256	1-244-841-00	Ⓐ	47	½ W	carbon
R207, 257	1-244-894-00	Ⓐ	7.5 k	½ W	carbon
R208, 258	1-244-841-00	Ⓐ	47	½ W	carbon
R209, 259	1-214-621-00	Ⓑ	100	½ W (2 %)	metal oxide
R210, 260	1-244-851-00	Ⓐ	120	½ W	carbon
R211, 261 R212, 262	1-247-236-00	Ⓐ	680	½ W	carbon (nonflammable)
R213, 263	1-244-926-00	Ⓐ	160 k	½ W	carbon
R214, 264	1-244-873-00	Ⓐ	1 k	½ W	carbon
R215, 265	1-247-228-00	Ⓐ	330	½ W	carbon (nonflammable)
R216, 266 R217, 267	1-247-201-00	Ⓐ	24	½ W	carbon (nonflammable)
R218, 268	1-214-626-00	Ⓐ	56 k	½ W (1 %)	metal oxide
R219, 269	1-214-624-00	Ⓐ	4.7 k	½ W (1 %)	metal oxide
R221, 271	1-244-857-00	Ⓐ	220	½ W	carbon
R222, 272	1-244-918-00	Ⓐ	75 k	½ W	carbon
R301, 351	1-244-938-00	Ⓐ	510 k	½ W	carbon
R302, 352	1-244-861-00	Ⓐ	330	½ W	carbon

Note: Circled letters (Ⓐ to Ⓩ) are applicable to European models only.

Ref. No.	Part No.	Description		
R303, 353	1-244-873-00 Ⓐ	1 k	½ W	carbon
R304, 354	1-244-885-00 Ⓐ	3.3 k	½ W	carbon
R305, 355	1-244-857-00 Ⓐ	220	½ W	carbon
R306, 356	1-244-933-00 Ⓐ	330 k	½ W	carbon
R401	⚠1-244-873-00 Ⓐ	1 k	½ W	carbon
R402	⚠1-244-905-00 Ⓐ	22 k	½ W	carbon
R403	⚠1-244-902-00 Ⓐ	16 k	½ W	carbon
R404	⚠1-244-897-00 Ⓐ	10 k	½ W	carbon
R405	⚠1-244-873-00 Ⓐ	1 k	½ W	carbon
R406	⚠1-244-897-00 Ⓐ	10 k	½ W	carbon
R407	⚠1-244-905-00 Ⓐ	22 k	½ W	carbon
R408	⚠1-244-902-00 Ⓐ	16 k	½ W	carbon
R409, 410	⚠1-217-310-00 Ⓐ	100	5 W	wirewound (nonflammable)
R411, 412	⚠1-247-079-00 Ⓐ	4.7	¼ W	carbon (nonflammable)
R413	⚠1-206-650-00 Ⓑ	270 k	2 W	metal oxide (nonflammable)
R414	1-244-887-00 Ⓐ	3.9 k	½ W	carbon
R415	⚠1-244-886-00 Ⓐ	3.6 k	½ W	carbon
R422, 423	⚠1-244-878-00 Ⓐ	1.6 k	½ W	carbon
R431, 432		4.7	½ W	carbon (nonflammable)
R509, 609	⚠1-206-461-00 Ⓑ	8.2	2 W	metal oxide (nonflammable)
R512, 612	1-214-620-00 Ⓑ	56	½ W (2 %)	metal oxide
R518, 618	1-244-891-00 Ⓐ	5.6 k	½ W	carbon
R519, 619 R520, 620	1-247-103-00 Ⓐ	68	¼ W	carbon (nonflammable)
R522, 622	1-247-099-00 Ⓐ	47	¼ W	carbon (nonflammable)
R523, 623	1-247-095-00 Ⓐ	33	¼ W	carbon (nonflammable)
R524, 624	1-247-099-00 Ⓐ	47	¼ W	carbon (nonflammable)
R525, 625	⚠1-247-107-00 Ⓐ	100	¼ W	carbon (nonflammable)
R526, 626	⚠1-206-461-00 Ⓐ	8.2	2 W	metal oxide (nonflammable)
R527, 627	⚠1-247-107-00 Ⓐ	100	¼ W	carbon (nonflammable)

Ref. No.	Part No.	Description		
R529, 629	⚠1-247-200-00 Ⓐ	22	½ W	carbon (nonflammable)
R531, 631	⚠1-247-200-00 Ⓐ	22	½ W	carbon (nonflammable)
R532, 632	⚠1-247-224-00 Ⓐ	220	½ W	carbon (nonflammable)
R541, 641 R542, 642	⚠1-214-610-00 Ⓑ	0.22	2 W	metal oxide (nonflammable)
R543, 643	1-214-206-00 Ⓑ	10 k	½ W (2 %)	metal oxide
R544, 644	1-247-083-00 Ⓐ	10	¼ W	carbon (nonflammable)
R560, 660 R561, 661	⚠1-214-610-00 Ⓑ	0.22	2 W	metal oxide (nonflammable)
R646	⚠1-206-673-00 Ⓑ	2.4 k	2 W	metal oxide (nonflammable)
R649, 650	⚠1-244-921-00 Ⓐ	100 k	½ W	carbon
R658	⚠1-206-662-00	820	2 W	metal oxide (nonflammable)
R701	1-244-863-00 Ⓐ	390	½ W	carbon
R704	⚠1-244-904-00 Ⓐ	20 k	½ W	carbon (US model)
R704	⚠1-214-602-00	43 k	2 W	metal oxide (nonflammable) (AEP, UK, PX model)
R705	⚠1-206-674-00	2.7 k	2 W	metal oxide (nonflammable) (PX model)
R706	⚠1-206-678-00	3.9 k	2 W	metal oxide (nonflammable) (PX model)
R707	⚠1-207-678-00 Ⓑ	10	5 W	wirewound (nonflammable) (AEP, UK, PX model)
R707	⚠1-217-294-00	4.7	5 W	wirewound (nonflammable) (US model)
R710	1-244-887-00 Ⓐ	3.9 k	½ W	carbon
R801, 851 R802, 852	1-244-889-00 Ⓐ	4.7 k	½ W	carbon
R803, 853	1-214-103-00 Ⓐ	62	¼ W (1 %)	metal oxide
R805, 855	1-244-945-00 Ⓐ	1M	½ W	carbon
R806, 856	1-244-913-00 Ⓐ	47 k	½ W	carbon
R808, 858	1-244-855-00 Ⓐ	180	½ W	carbon
R809, 859	1-244-883-00 Ⓐ	2.7 k	½ W	carbon
R810, 860	1-244-872-00 Ⓐ	910	½ W	carbon
R811, 861	1-244-873-00 Ⓐ	1 k	½ W	carbon
R812, 862	1-214-126-00 Ⓐ	560	¼ W (1 %)	metal oxide
R813, 863	1-214-180-00 Ⓐ	100 k	¼ W (1 %)	metal oxide

Note: The components identified by shading and mark ⚠ are critical for safety. Replace only with part number specified.

Note: Circled letters (Ⓐ to Ⓩ) are applicable to European models only.

Ref. No.	*Part No.*		*Description*
R814, 864	1-214-625-00	Ⓑ	51 k ½ W (2 %) metal oxide
R815, 865	1-214-627-00	Ⓑ	1 M ½ W (2 %) metal oxide
R816, 866	1-214-208-00	Ⓑ	100 k ½ W (2 %) metal oxide
R901	⚠1-246-519-00		82 k ¼ W carbon (US model)
R901	⚠1-244-927-00	Ⓐ	180 k ½ W carbon (AEP, UK, PX model)
R902	⚠1-211-553-00	Ⓐ	2.7 k ¼ W carbon (nonflammable)
R903	⚠1-246-483-00	Ⓐ	2.7 k ¼ W carbon
R904	⚠1-246-507-00	Ⓐ	27 k ¼ W carbon
R905	⚠1-246-469-00	Ⓐ	680 ¼ W carbon
R906	⚠1-244-827-00	Ⓐ	12 ½ W carbon
RT501, 601	1-224-247-XX	Ⓑ	100 k-B, adjustable; dc balance
RT502, 602	1-224-252-XX	Ⓑ	10 k-B, adjustable; idling current
RT820, 821	1-224-254-XX	Ⓑ	47 k-B, adjustable; LED meter
RV201, 251	1-224-247-XX	Ⓑ	100 k-B, adjustable; maximum input level
RV802, 852	1-226-452-00	Ⓓ	100 k, variable; BALANCE
RV803, 853	1-226-451-00	Ⓗ	100 k, variable; ATTENUATOR
RV804, 854	1-226-449-00	Ⓔ	10 k-A, variable; TREBLE
RV805, 855	1-226-448-00	Ⓔ	10 k-A, variable; BASS

SWITCHES

S1	1-552-722-00	Ⓓ	Lever-slide, PHONO
S2	1-552-720-00	Ⓕ	Rotary-slide, HEAD AMP
S3	1-552-722-00	Ⓓ	Lever-slide, LOW FILTER
S4	1-552-716-00	Ⓖ	Pushbutton, FUNCTION
S5	1-552-717-00	Ⓖ	Pushbutton, MONITOR
S6	1-552-721-00	Ⓔ	Rotary-slide, TAPE COPY
S7	1-552-722-00	Ⓓ	Lever-slide, MODE
S8	1-552-718-00	Ⓔ	Pushbutton, TONE
S9	1-552-721-00	Ⓔ	Rotary-slide, SPEAKERS
S10	⚠1-552-974-00		Rotary, POWER (US model)
S10	⚠1-552-975-00	Ⓔ	Rotary, POWER (AEP, UK, PX model)
VS	⚠1-552-963-00		Voltage Selector (PX model)

JACKS

J801–808, J851–858	1-507-629-00	Ⓔ	Phono, 4 p; PHONO 1, 2/TUNER/AUX/TAPE 1/REC OUT 1/TAPE 2/REC OUT 2
PJ001	1-507-553-00	Ⓒ	HEADPHONES

Note: The components identified by shading and mark ⚠ are critical for safety. Replace only with part number specified.

Ref. No.	*Part No.*		*Description*

MISCELLANEOUS

CNP001	⚠1-526-574-00		Socket, AC OUTLET (US model)
F701	⚠1-532-325-00	Ⓑ	Fuse, T6.3A (AEP, UK, PX model)
F701	⚠1-532-422-00		Fuse, 6.3A (US model)
F702	⚠1-532-556-00	Ⓑ	Fuse, 2A (AEP, UK, PX model)
RY601, 602	1-515-302-00	Ⓕ	Relay
RY701	⚠1-515-278-00	Ⓖ	Relay (US model)
RY701	⚠1-515-347-00	Ⓖ	Relay (AEP, UK, PX model)
RY702	1-515-328-00	Ⓕ	Relay
RY901	⚠1-515-349-00		Relay (PX model)
THP601	1-800-427-00	Ⓑ	Thermistor, positive
TM001, 002	1-536-571-00	Ⓒ	Terminal, 4 p; SPEAKER A, B
	⚠1-517-072-00	Ⓐ	Holder, fuse (US model)
	⚠1-533-131-00	Ⓐ	Holder, fuse (AEP, UK, PX model)
	⚠1-534-777-00	Ⓔ	Cord, power (AEP model)
	⚠1-534-817-00	Ⓔ	Cord, power (UK model)
	⚠1-534-993-00		Cord, power (PX model)
	⚠1-551-511-00		Cord, power (US model)
	1-588-676-00	Ⓚ	Printed Circuit Board, jumper

ACCESSORIES AND PACKING MATERIALS

Part No.		*Description*
1-506-113-00	Ⓑ	Plug, shorting
1-526-565-11		Adaptor, ac plug (PX1 model)
2-260-606-00	Ⓑ	Bag, plastic; protection
3-701-630-00	Ⓐ	Bag, plastic; instruction manual
3-701-730-00	Ⓑ	Bag, plastic
3-770-686-11	Ⓖ	Manual, instruction (AEP, UK, PX model)
3-770-686-21		Manual, instruction (US model)
4-848-648-00	Ⓒ	Bag, plastic
4-861-338-00	Ⓖ	Protector
4-861-604-00	Ⓕ	Carton
4-861-605-00	Ⓓ	Cushion, left
4-861-606-00	Ⓓ	Cushion, right

1/4 WATT CARBON RESISTORS Ⓐ

Note: Circled letter Ⓐ is applicable to European models only.

Ω	Part No.	Ω	Part No.	Ω	Part No.	Ω	Part No.	Ω	Part No.	Ω	Part No.	Ω	Part No.
1.0	1-246-401-00	10	1-246-425-00	100	1-246-449-00	1.0k	1-246-473-00	10k	1-246-497-00	100k	1-246-521-00	1.0M	1-246-545-00
1.1	1-246-402-00	11	1-246-426-00	110	1-246-450-00	1.1k	1-246-474-00	11k	1-246-498-00	110k	1-246-522-00	1.1M	1-210-814-00
1.2	1-246-403-00	12	1-246-427-00	120	1-246-451-00	1.2k	1-246-475-00	12k	1-246-499-00	120k	1-246-523-00	1.2M	1-210-815-00
1.3	1-246-404-00	13	1-246-428-00	130	1-246-452-00	1.3k	1-246-576-00	13k	1-246-500-00	130k	1-246-524-00	1.3M	1-210-816-00
1.5	1-246-405-00	15	1-246-429-00	150	1-246-453-00	1.5k	1-246-577-00	15k	1-246-501-00	150k	1-246-525-00	1.5M	1-210-817-00
1.6	1-246-406-00	16	1-246-430-00	160	1-246-454-00	1.6k	1-246-578-00	16k	1-246-502-00	160k	1-246-526-00	1.6M	1-210-818-00
1.8	1-246-407-00	18	1-246-431-00	180	1-246-455-00	1.8k	1-246-579-00	18k	1-246-503-00	180k	1-246-527-00	1.8M	1-210-819-00
2.0	1-246-408-00	20	1-246-432-00	200	1-246-456-00	2.0k	1-246-580-00	20k	1-246-504-00	200k	1-246-528-00	2.0M	1-210-820-00
2.2	1-246-409-00	22	1-246-433-00	220	1-246-457-00	2.2k	1-246-581-00	22k	1-246-505-00	220k	1-246-529-00	2.2M	1-210-821-00
2.4	1-246-410-00	24	1-246-434-00	240	1-246-458-00	2.4k	1-246-582-00	24k	1-246-506-00	240k	1-246-530-00	2.4M	1-244-754-00
2.7	1-246-411-00	27	1-246-435-00	270	1-246-459-00	2.7k	1-246-583-00	27k	1-246-507-00	270k	1-246-531-00	2.7M	1-244-755-00
3.0	1-246-412-00	30	1-246-436-00	300	1-246-460-00	3.0k	1-246-584-00	30k	1-246-508-00	300k	1-246-532-00	3.0M	1-244-756-00
3.3	1-246-413-00	33	1-246-437-00	330	1-246-461-00	3.3k	1-246-585-00	33k	1-246-509-00	330k	1-246-533-00	3.3M	1-244-757-00
3.6	1-246-414-00	36	1-246-438-00	360	1-246-462-00	3.6k	1-246-586-00	36k	1-246-510-00	360k	1-246-534-00	3.6M	1-244-758-00
3.9	1-246-415-00	39	1-246-439-00	390	1-246-463-00	3.9k	1-246-587-00	39k	1-246-511-00	390k	1-246-535-00	3.9M	1-244-759-00
4.3	1-246-416-00	43	1-246-440-00	430	1-246-464-00	4.3k	1-246-488-00	43k	1-246-512-00	430k	1-246-536-00	4.3M	1-244-760-00
4.7	1-246-417-00	47	1-246-441-00	470	1-246-465-00	4.7k	1-246-489-00	47k	1-246-513-00	470k	1-246-537-00	4.7M	1-244-761-00
5.1	1-246-418-00	51	1-246-442-00	510	1-246-466-00	5.1k	1-246-490-00	51k	1-246-514-00	510k	1-246-538-00	5.1M	1-244-762-00
5.6	1-246-419-00	56	1-246-443-00	560	1-246-467-00	5.6k	1-246-491-00	56k	1-246-515-00	560k	1-246-539-00		
6.2	1-246-420-00	62	1-246-444-00	620	1-246-468-00	6.2k	1-246-492-00	62k	1-246-516-00	620k	1-246-540-00		
6.8	1-246-421-00	68	1-246-445-00	680	1-246-469-00	6.8k	1-246-493-00	68k	1-246-517-00	680k	1-246-541-00		
7.5	1-246-422-00	75	1-246-446-00	750	1-246-470-00	7.5k	1-246-494-00	75k	1-246-518-00	750k	1-246-542-00		
8.2	1-246-423-00	82	1-246-447-00	820	1-246-471-00	8.2k	1-246-495-00	82k	1-246-519-00	820k	1-246-543-00		
9.1	1-246-424-00	91	1-246-448-00	910	1-246-472-00	9.1k	1-246-496-00	91k	1-246-520-00	910k	1-246-544-00		

HARDWARE NOMENCLATURE

Screw: – P 3 x 10

- *L: Length in mm*
- *D: Diameter in mm*
- *Type of head*
- *Indicated slotted-head only. Unless otherwise indicated, it means cross-recessed head (Phillips type).*

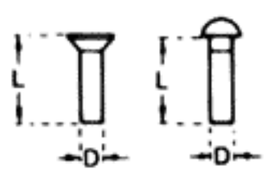

Nut, Washer, Retaining ring: N 3

- *Diameter of usable screw or shaft*
- *Reference designation*

Reference Designation	Shape	Description	Remarks
		SCREWS	
P		pan-head screw	binding-head (B) screw for replacement
PWH		pan-head screw with washer face	binding-head (B) screw and flat washer for replacement
PS PSP		pan-head screw with spring washer	binding-head (B) screw and spring washer for replacement
PSW PSPW		pan-head screw with spring and flat washers	binding-head (B) screw and spring and flat washers for replacement
R		round-head screw	binding-head (B) screw for replacement
K		flat-countersunk-head screw	
RK		oval-countersunk-head screw	
B		binding-head screw	
T		truss-head screw	binding-head (B) screw for replacement
F		flat-fillister-head screw	
RF		fillister-head screw	
BV		braizer-head screw	

Reference Designation	Shape	Description	Remarks
		SELF-TAPPING SCREWS	
TA		self-tapping screw	ex: TA, P 3 x 10
PTP		pan-head self-tapping screw	binding-head self-tapping (TA, B) screw for replacement
PTPWH		pan-head self-tapping screw with washer face	binding-head self tapping (TA, B) screw and flat washer for replacement
PTTWH		pan-head thread-rolling screw with washer face	binding-head (B) screw and flat washer for replacement
		SET SCREWS	
SC		set screw	
SC		hexagon-socket set screw	ex: SC 2.6 x 4, hexagon socket
		NUT	
N		nut	
		WASHERS	
W		flat washer	
SW		spring washer	
LW		internal-tooth lock washer	ex: LW3, internal
LW		external-tooth lock washer	ex: LW3, external
		RETAINING RINGS	
E		retaining ring	
G		grip-type retaining ring	

Sony Corporation

9-958-604-11

1979

79E0596-1

Printed in Japan