TC-FX7

US Model
Canadian Model
AEP Model
UK Model
E Model

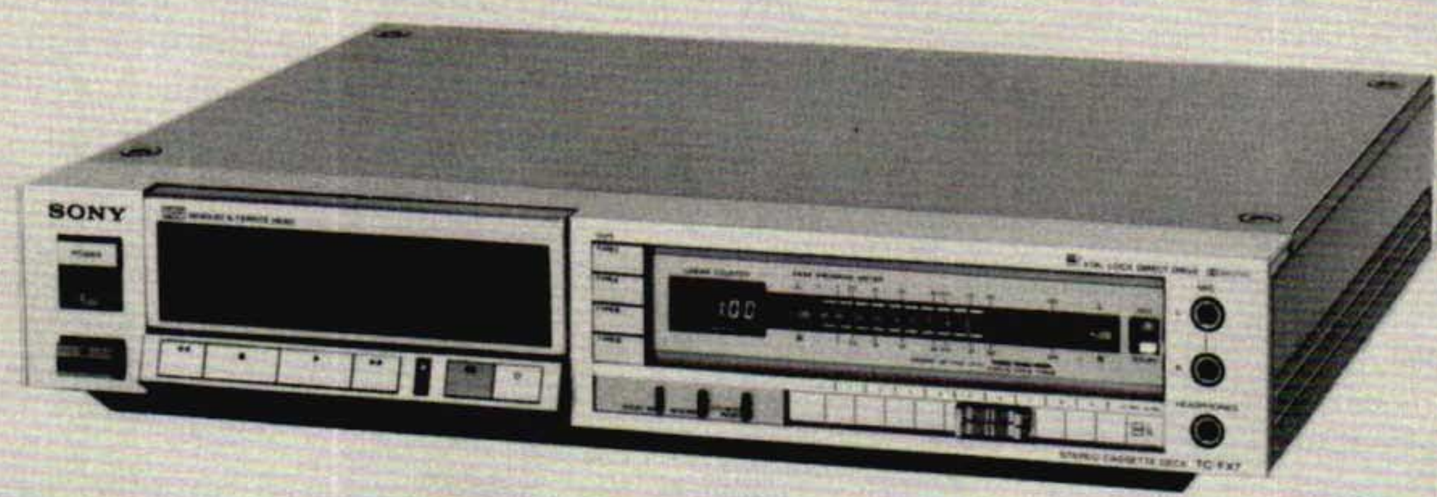

'Dolby' and the double-D symbol are the trade marks of Dolby Laboratories. Noise reduction system manufactured under license from Dolby Laboratories.

STEREO CASSETTE DECK

SPECIFICATIONS

GENERAL

Power Requirements: 120 V ac, 60 Hz (US, Canadian model)
220 V ac, 50/60 Hz (AEP model)
240 V ac, 50/60 Hz (UK model)
110, 120, 220 or 240 V ac adjustable, 50/60 Hz (E model)

Power Consumption: 35 W

Dimensions: Approx. 430 (w) x 80 (h) x 340 (d) mm
17 (w) x 3¼ (h) x 13½ (d) inches
including projecting parts and controls

Weight: Approx. 6.5 kg, 14 lb 6 oz

TAPE RECORDER SECTION

Recording System: 4-track 2-channel stereo

Fast-forward and Rewind Time: Approx. 80 sec. (with C-60)

Frequency Response: DOLBY NR OFF
US, Canadian model
- With TYPE IV cassette (Sony METALLIC)
  20–19,000 Hz
  30–17,000 Hz (± 3 dB)
  30–13,000 Hz (± 3 dB, 0 VU recording)
- With TYPE III cassette (Sony Fe-Cr)
  20–19,000 Hz
  30–17,000 Hz (± 3 dB)
- With TYPE II cassette (Sony EHF)
  20–18,000 Hz
  30–16,000 Hz (± 3 dB)
- With TYPE I cassette (Sony HFX)
  20–18,000 Hz

— Continued on next page —

ATTENTION AU COMPOSANT AYANT RAPPORT À LA SÉCURITÉ!

LES COMPOSANTS IDENTIFIÉS PAR UNE TRAME ET UNE MARQUE ⚠ SUR LES DIAGRAMMES SCHÉMATIQUES, LES VUES EXPLOSÉES ET LA LISTE DES PIÈCES SONT CRITIQUES POUR LA SÉCURITÉ DE FONCTIONNEMENT. NE REMPLACER CES COMPOSANTS QUE PAR DES PIÈCES SONY DONT LES NUMÉROS SONT DONNÉS DANS CE MANUEL OU DANS LES SUPPLÉMENTS PUBLIÉS PAR SONY.

SAFETY-RELATED COMPONENT WARNING!!

COMPONENTS IDENTIFIED BY SHADING AND MARK ⚠ ON THE SCHEMATIC DIAGRAMS, EXPLODED VIEWS AND IN THE PARTS LIST ARE CRITICAL TO SAFE OPERATION. REPLACE THESE COMPONENTS WITH SONY PARTS WHOSE PART NUMBERS APPEAR AS SHOWN IN THIS MANUAL OR IN SUPPLEMENTS PUBLISHED BY SONY.

SONY®

SERVICE MANUAL

AEP, UK, E model
- With TYPE IV cassette (Sony METALLIC)
  20–19,000 Hz
  30–17,000 Hz (± 3 dB)
  30–13,000 Hz (± 3 dB, 0 VU recording)
  30–17,000 Hz (DIN)
- With TYPE III cassette (Sony Fe-Cr)
  20–19,000 Hz
  30–17,000 Hz (± 3 dB)
  30–17,000 Hz (DIN)
- With TYPE II cassette (Sony CD-α)
  20–18,000 Hz
  30–16,000 Hz (± 3 dB)
  30–16,000 Hz (DIN)
- With TYPE I cassette (Sony BHF)
  20–18,000 Hz
  30–16,000 Hz (DIN)

Wow and Flutter: 0.05 % WRMS (US, Canadian model)
0.05 % WRMS (NAB) } (AEP, UK, E model)
± 0.14 % (DIN) }

S/N Ratio: DOLBY NR OFF
US, Canadian model
- With TYPE IV cassette (Sony METALLIC)
  59 dB at peak level
- With TYPE III cassette (Sony Fe-Cr)
  59 dB at peak level
- With TYPE II cassette (Sony EHF)
  57 dB at peak level

AEP, UK, E model
- With TYPE IV cassette (Sony METALLIC)
  59 dB at peak level (NAB)
  56 dB (DIN)
- With TYPE III cassette (Sony Fe-Cr)
  59 dB at peak level (NAB)
  56 dB (DIN)
- With TYPE II cassette (Sony CD-α)
  57 dB at peak level (NAB)

DOLBY NR ON
Improved by 5 dB at 1 kHz, 10 dB above 5 kHz

Total Harmonic Distortion: 0.9 % (with Sony METALLIC cassette)

Record Bias Frequency: 105 kHz

Inputs: MIC (two phone jacks)
sensitivity 0.25 mV (−70 dB) for
a low-impedance microphone
LINE IN (two phono jacks)
sensitivity 77.5 mV (−20 dB)
input impedance 50 kΩ

Outputs: LINE OUT (two phono jacks)
output level −5 dB at load
impedance 50 kΩ
suitable load impedance more than 10 kΩ
HEADPHONES (binaural jack)
output level −20 to −44 dB at load
impedance 8 Ω

Liquid Crystal Peak Program Meters:
Response range: −40 dB to +8 dB
Frequency response: 20 – 20,000 Hz ± 1.5 dB
Response time: 1 millisecond
Decay time (from 0 dB to −20 dB): 750 milliseconds
Overshoot: None
Indicator elements: 16 elements for each channel

0 dB = 0.775 V

MODEL IDENTIFICATION
– Specification Label –

E model:

SONY® MODEL NO. TC–FX7
TAPECORDER
AC : 110, 120, 220, 240V 50/60Hz 35W
SERIAL NO.
MADE IN JAPAN

AEP model:

SONY® MODEL NO. TC–FX7
TAPECORDER
AC : 220V 50/60Hz 35W
SERIAL NO.
MADE IN JAPAN

UK model:

SONY® MODEL NO. TC–FX7
TAPECORDER
AC : 240V 50/60Hz 35W
SERIAL NO.
MADE IN JAPAN

US, Canadian model:

SONY® MODEL NO. TC–FX7
TAPECORDER
AC : 120V 60Hz 35W
SERIAL NO.
MADE IN JAPAN

SERVICING NOTE

Shut-Off Detection

This set uses an optical system for the shut-off detection. Each reel spindle has four small fan-shaped holes at an equal separation in it.

The pilot lamp PL802 places at the top center and just behind the ornament of the deck mechanism. When the POWER is turned on, this pilot lamp lights and its light propagates from the top to bottom through the plastic light-propagating plate. This light-propagating plate has two tips which locate right in front of the four holes of the two reel spindles. In the modes other than the stop, in which case the reel spindles are turning, the light radiated from the tip now intermittently reaches to the two photo transistors Q701 and Q702 which are located on the photo transistor circuit board located right behind the reel spindles and on the deck-mechanism chassis.

The photo transistors Q701 and Q702 generate a pulse signal on receipt of the intermittent light through the holes on the reel spindles. This pulse signal is then applied to the mechanism controller IC701 and the CPU IC801 through the amplifier Q709, Q704, Q710 and Q703.

When a maintainance/repair is to be made with the ornament plate removed, temporarily connect an audio signal generator to the collectors of Q709 and Q710 on the display tube board as shown to disable the shut-off operation.

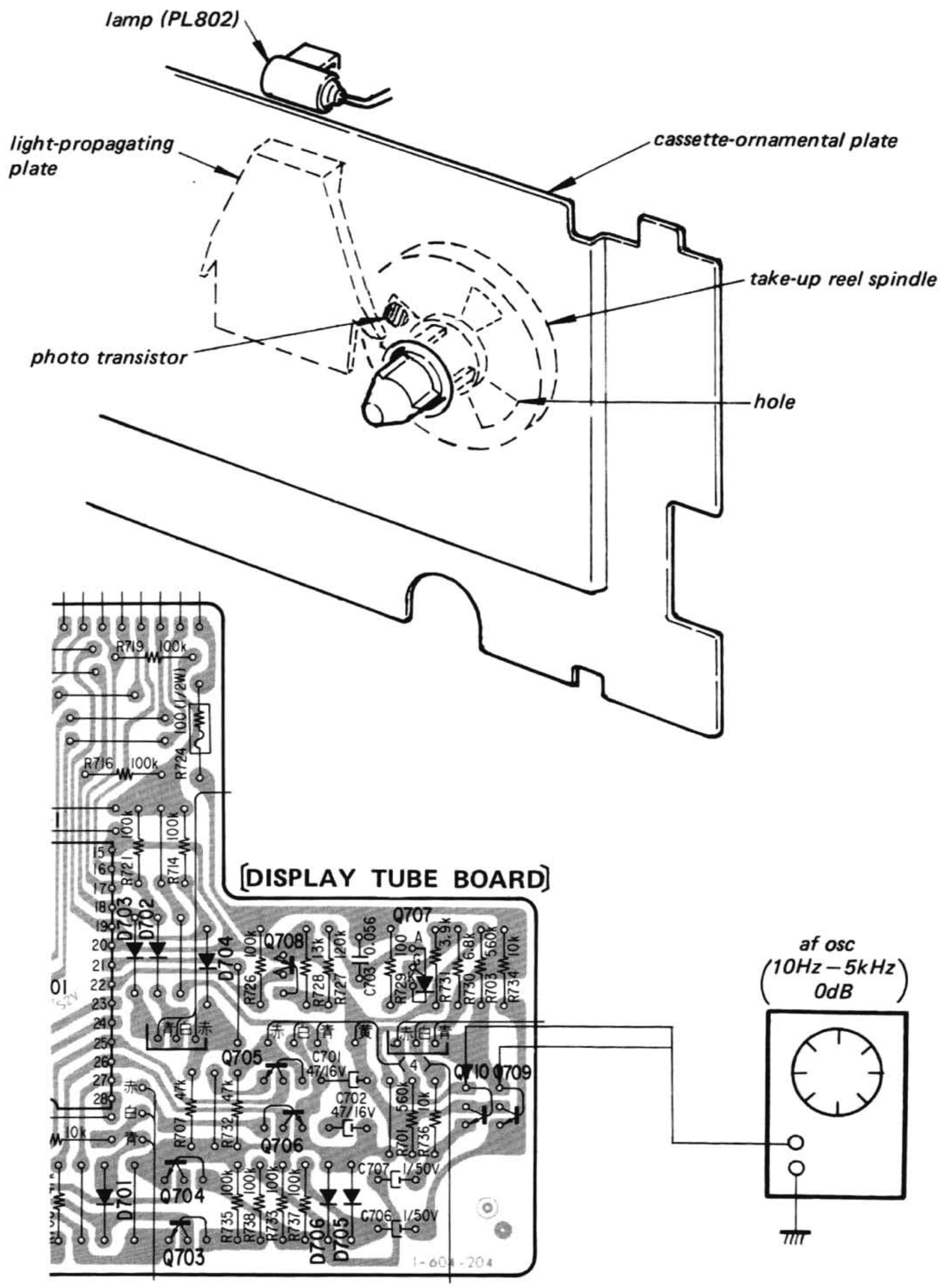

SECTION 1
OUTLINE

1-1. CIRCUIT DESCRIPTION

• LINEAR COUNTER

This set uses a new-type electrical tape counter, instead of the conventional belt-driven mechanical tape counter, by adopting a microcomputer. This tape counter displays the tape-travelling time almost linearly in actual time in continuous record and playback modes. The tape-travelling time is calculated and determined by the microcomputer IC701 by determining the rotational speeds of the reel spindles by detecting the various factors such as the diameters of the remaining and wound tapes in the supply and take-up reel spindles, diameter of fully-wound tape, diameter of the reel hub, and the tape-travelling speed. This linear tape counter is intended for the tape cassettes C-60, C-90 and C-120. The tape counter can not be used with the tape cassettes C-46 and C-30. However, the display of the counter also runs linearly in the uses of tape cassettes C-30 and C-46.

As shown below, both reel spindles have four fan-shaped holes arranged in an even separation. In the modes in which the reel spindles rotate, the photo transistors Q701 at the supply side and Q702 at the take-up side generate four pulsive signals per revolution of the spindle.

The pulsive signals are applied to Q710, Q703 and Q709, Q704, respectively. The amplified signals then route to terminals 23 and 24 of the microcomputer IC701. In IC701, the microcomputer counts the input pulses and processes the arithmetic equational operation to an approximate value involving the difference of the rotational speed of both reel spindles. IC701 also processes and corrects the operation to make the pulse counting for one count per second, processes carry and decarry operations. IC701 finally processes the lower two digits to become in the 60-minutes system. One signal route for the segment go through the output terminals 6 – 13. Other signal routes for the grids go through the output terminals 16 – 19. Thus, the display tube displays four-digit digital minutes/seconds figures in a linear (time-wise) manner.

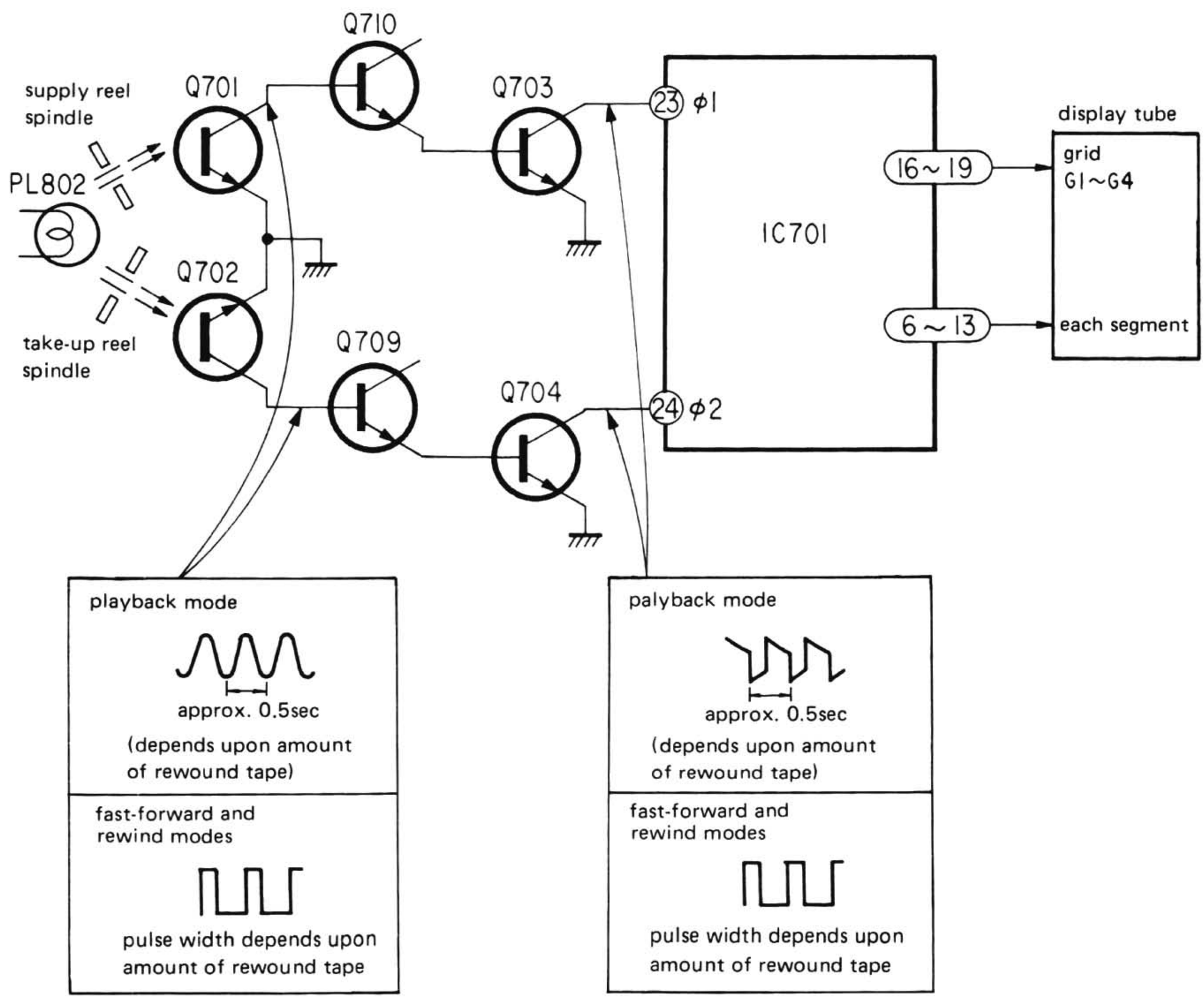

The accuracy of the counter

This counter is not actually a digital clock, so that the displayed figures are not exactly equal to the actual time spent. The accuracy will vary depending on the type of tape being used.
This counter has been designed using C-60 cassettes as a standard. Make sure that the displayed time is greater than the required actual time when using a C-46 or C-30 cassette.

• PEAK-PROGRAM METER

This set uses a peak-program meter utilizing LEDs and the input- or output-signal levels are indicated in the form of horizontal bar graphs.

a. Input Circuit:

The input signal Ⓐ is applied to the log converter IC103 as shown in Fig 1. This output signal is then rectified by D105. These dc voltages now routes to terminals 10 and 11 of the LED driver IC601 through the meter-level controls RV103 and RV203. Q109 and Q209 act as meter-muting circuits and they control the current to be applied to the input of the LED driver IC601.

b. LED Indication Circuit:

The LEDs light when the cathode signals shown by Ⓖ through Ⓝ and anode signals shown by Ⓒ through Ⓕ become in the same level. When the LINE OUT level is +3dB, the portions a and c in the waveform of the anode signal Ⓖ through Ⓝ become in a low level at the low-level portions of the anode signals Ⓒ and Ⓔ, and the eight elements 1 through 8 of both channels light as can be understood from Table 1.

Table 1. LED Indication Matrix

ANODE SIGNAL / CATHODE SIGNAL	L-CH		R-CH	
	Ⓒ	Ⓓ	Ⓔ	Ⓕ
Ⓖ	element 1 (leftmost)	9	element 1 (leftmost)	9
Ⓗ	2	10	2	10
Ⓘ	3	11	3	11
Ⓙ	4	12	4	12
Ⓚ	5	13	5	13
Ⓛ	6	14	6	14
Ⓜ	7	15	7	15
Ⓝ	8	element 16 (rightmost)	8	element 16 (rightmost)

Note: When both the anode and cathode signals become in low level, all of the LED elements up to that specific element number light. For example, all of twelve elements light when the anode signal Ⓓ is low and cathode signal Ⓙ is low.

c. Peak-Hold Reset Circuit:

Q601 is a PUT (Programmable Unijunction Transistor) and generates a reset-trigger pulse. This reset pulse is applied to the base of the peak-hold transistor Q602 and a reset signal of 2.25-second repetition rate is then applied to terminal 12 of the LED driver IC601 and the peak level is reset.

Measuring Condition

LINE IN : 1kHz, 0.25V (−10dB)
LINE OUT : 1.1V (+3dB)
Mode : record/forward

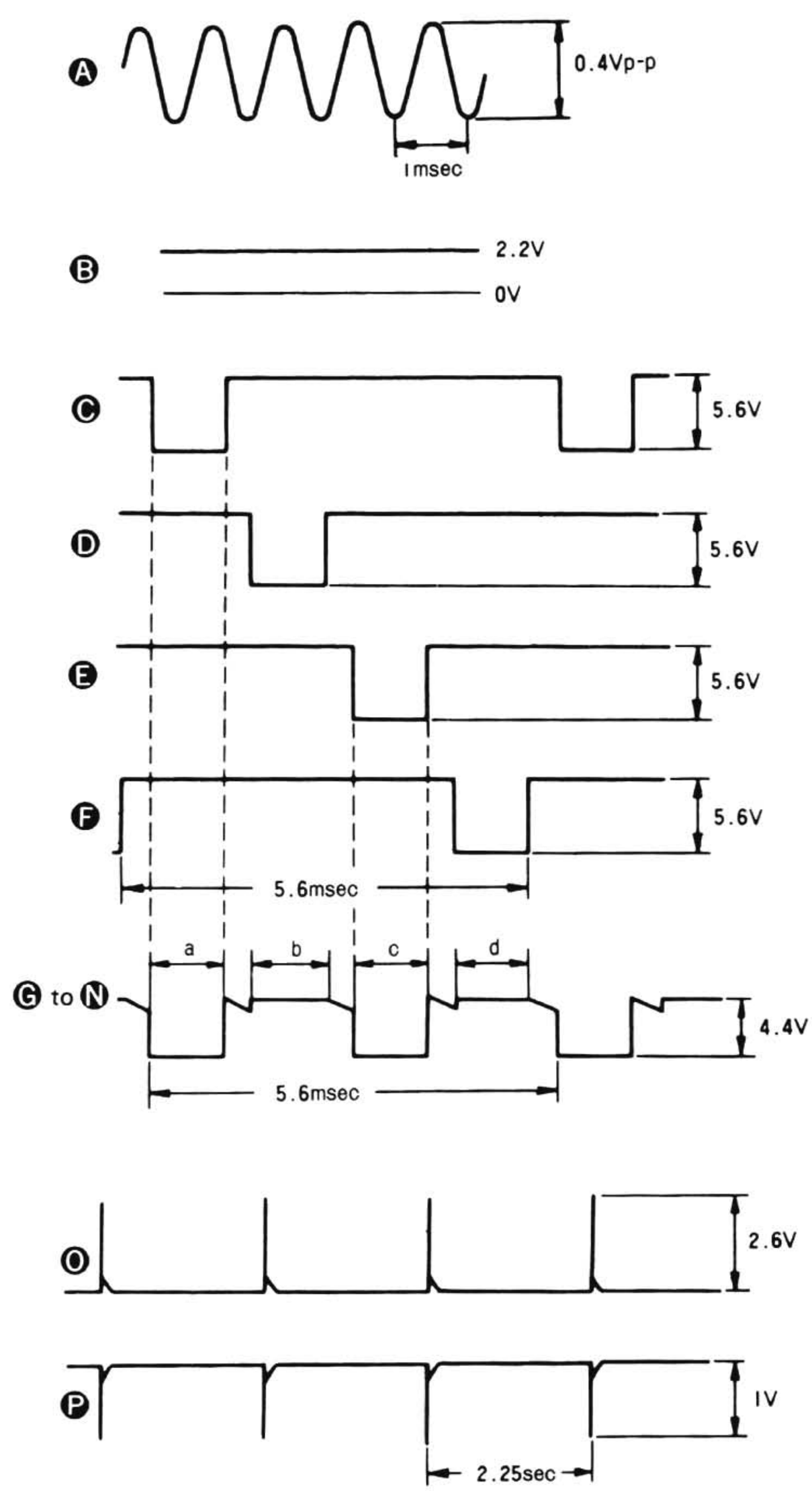

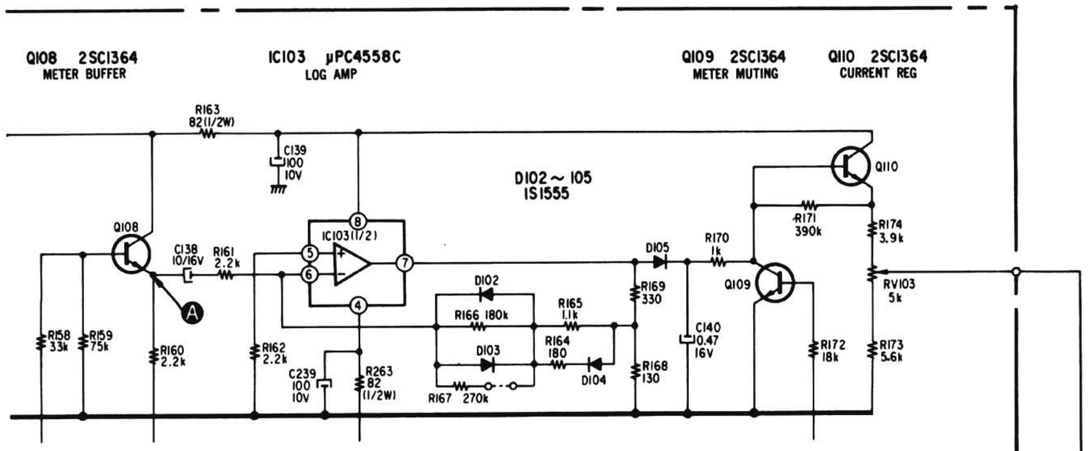
Q108 2SC1364
METER BUFFER
IC103 μPC4558C
LOG AMP
Q109 2SC1364
METER MUTING
Q110 2SC1364
CURRENT REG
R163 82(1/2W)
C139 100 10V
D102~105 1S1555
Q108
C138 10/16V
R161 2.2k
IC103(1/2)
D102
R166 180k
R165 1.1k
D103
R164 180
D104
R167 270k
R263 82 (1/2W)
C239 100 10V
R158 33k
R159 75k
R160 2.2k
R162 2.2k
D105
R169 330
R168 130
R170 1k
C140 0.47 16V
Q109
R171 390k
Q110
R174 3.9k
RV103 5k
R172 18k
R173 5.6k

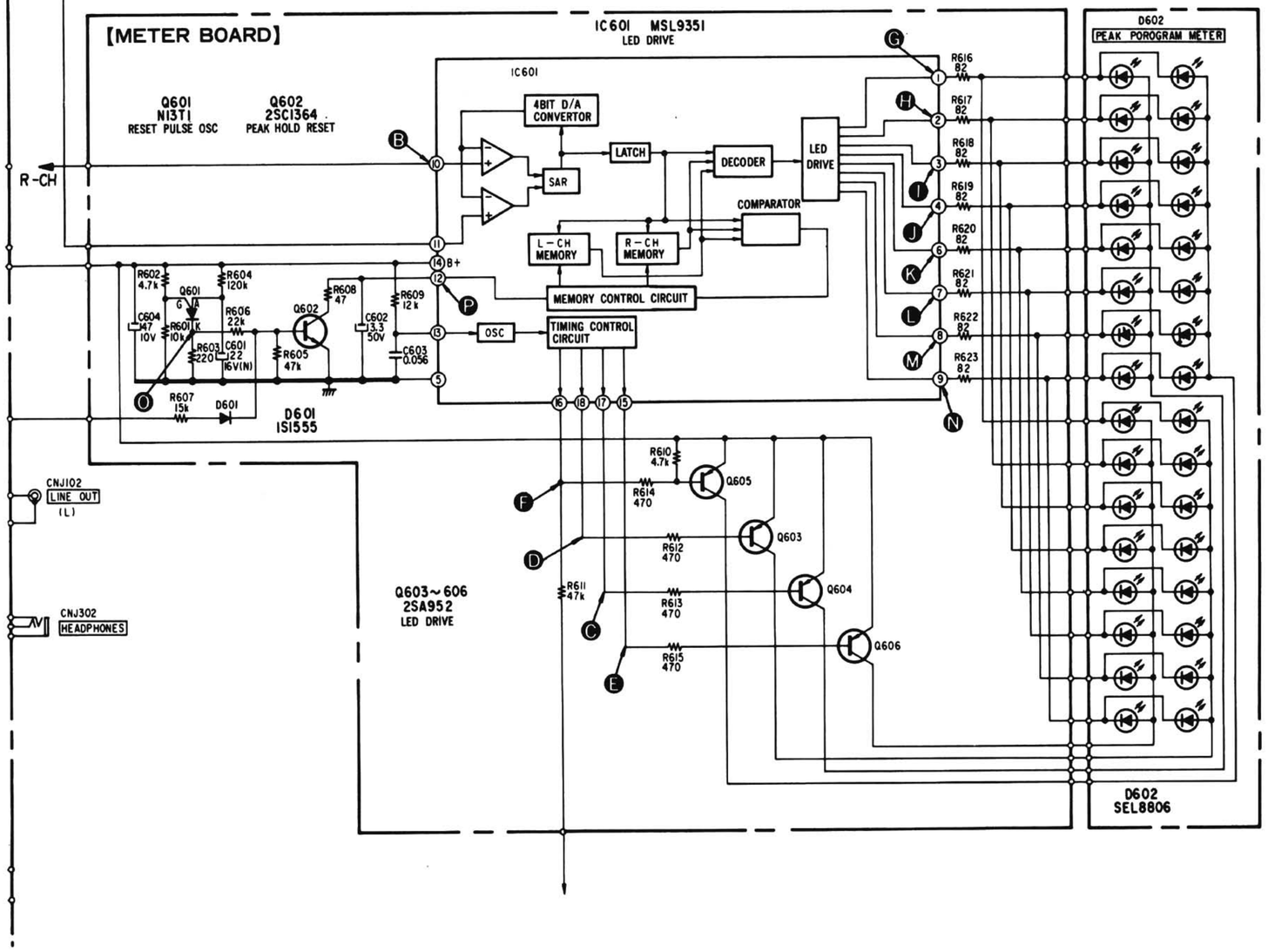
[METER BOARD]
IC601 MSL9351
LED DRIVE
Q601
N13T1
RESET PULSE OSC
Q602
2SC1364
PEAK HOLD RESET
R-CH
IC601
4BIT D/A CONVERTOR
SAR
LATCH
DECODER
LED DRIVE
COMPARATOR
L-CH MEMORY
R-CH MEMORY
MEMORY CONTROL CIRCUIT
OSC
TIMING CONTROL CIRCUIT
B+
R602 4.7k
R604 120k
Q601
C604 47 10V
R601 10k
R606 22k
R603 220
C601 22 16V(N)
Q602
R608 47
R605 47k
R609 12k
C602 3.3 50V
C603 0.056
R607 15k
D601
D601 1S1555
R616 82
R617 82
R618 82
R619 82
R620 82
R621 82
R622 82
R623 82
D602
PEAK POROGRAM METER
D602 SEL8806
CNJ102
LINE OUT
(L)
CNJ302
HEADPHONES
R610 4.7k
R614 470
Q605
R612 470
Q603
R611 47k
R613 470
Q604
R615 470
Q606
Q603~606
2SA952
LED DRIVE

1-2. BLOCK DIAGRAM
– System Control Section –

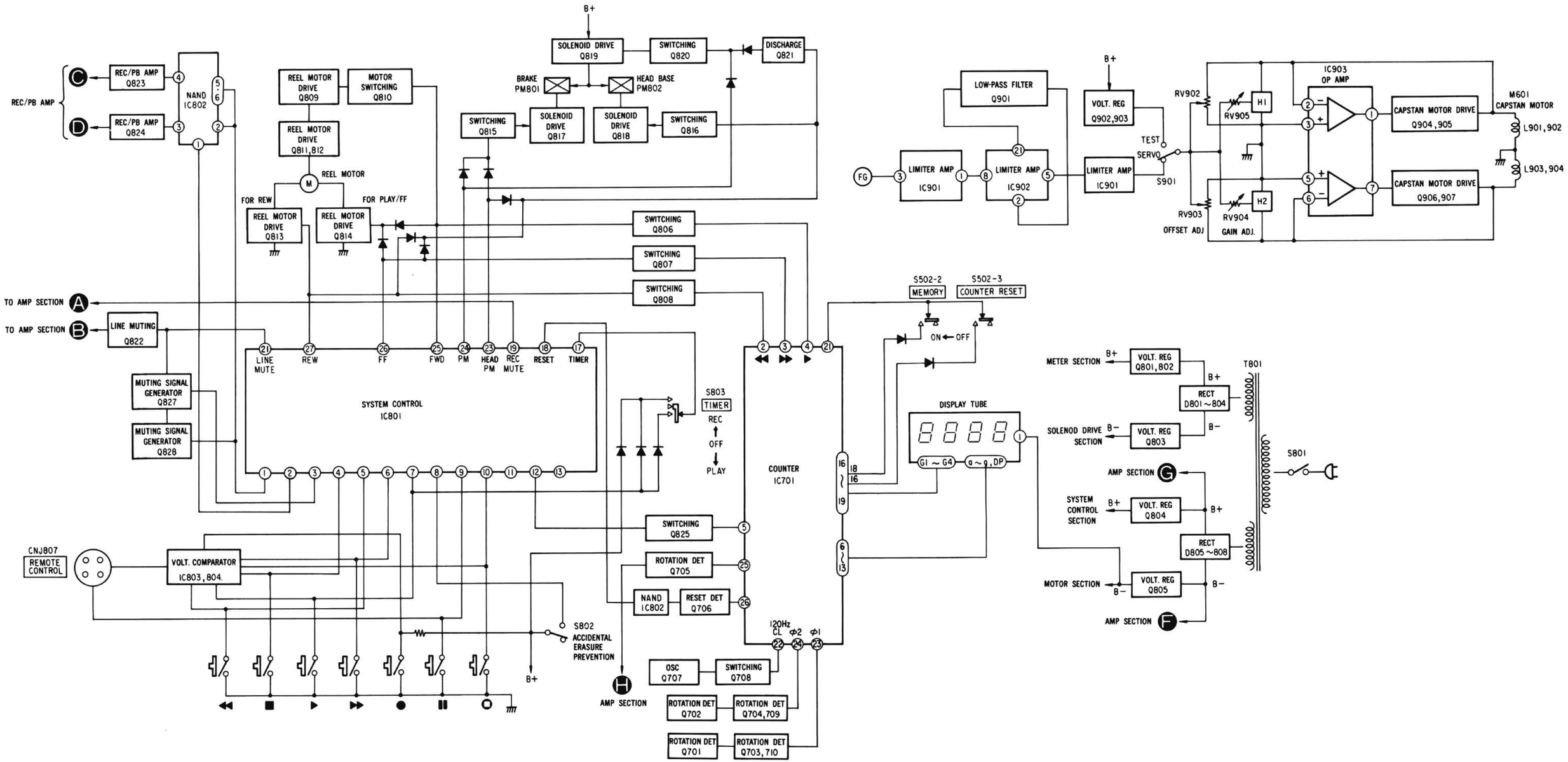

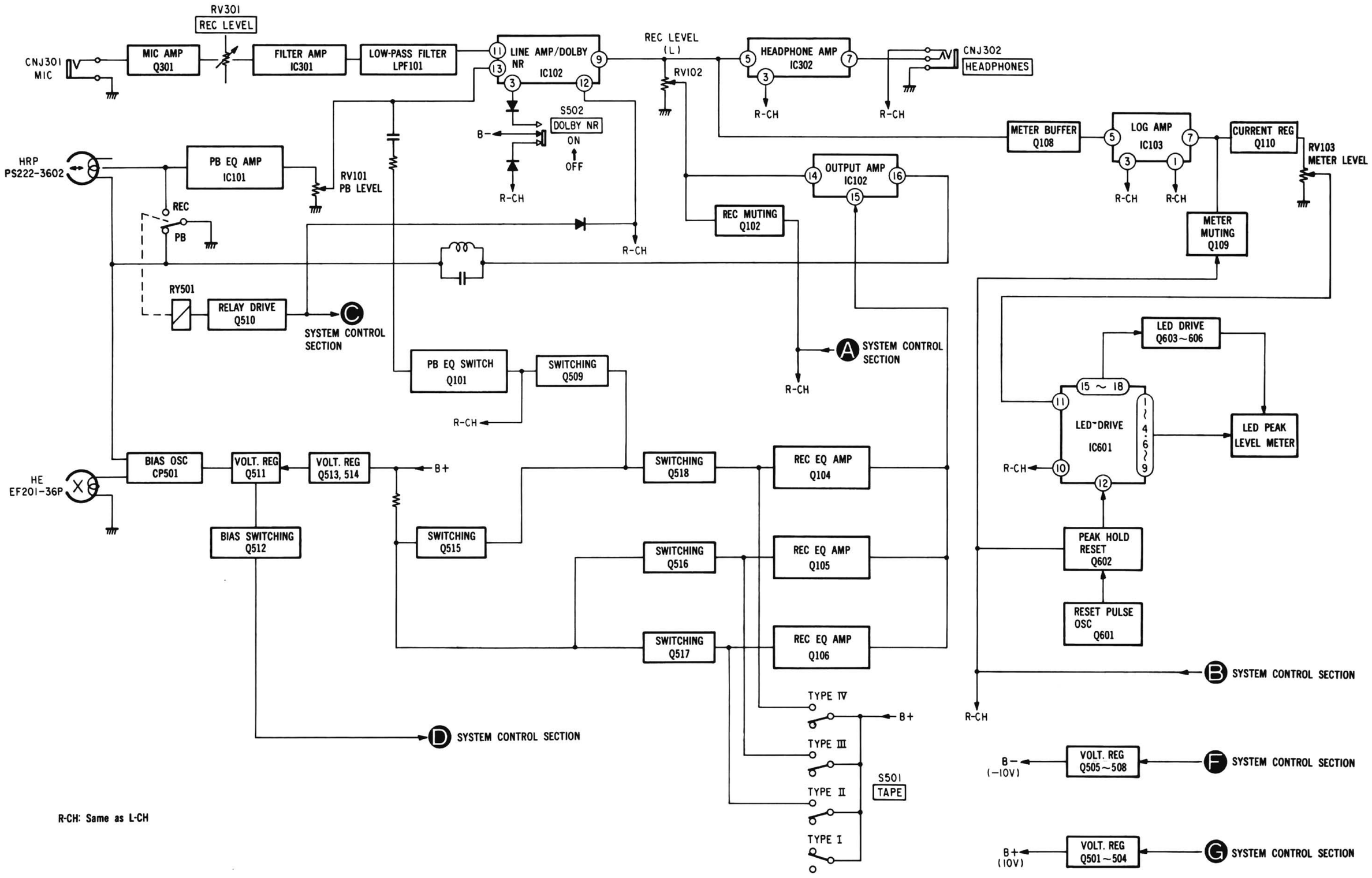

R-CH: Same as L-CH

SECTION 2
DISASSEMBLY

Top Cover Removal

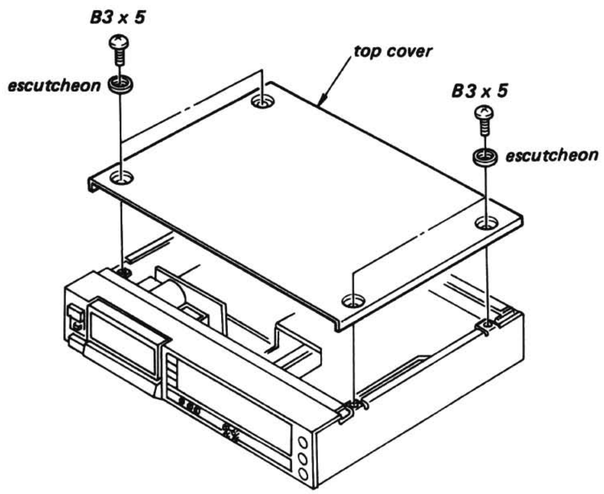

Tape Mechanism Removal

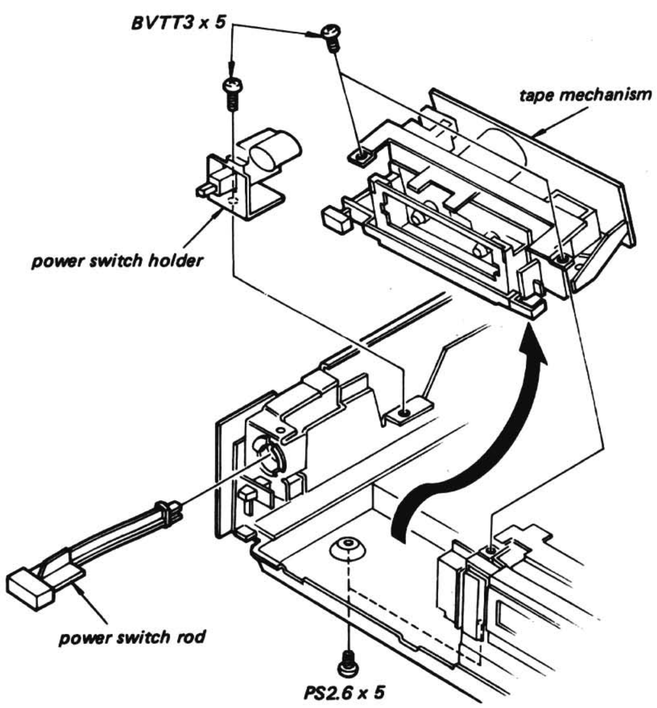

Front Panel Removal

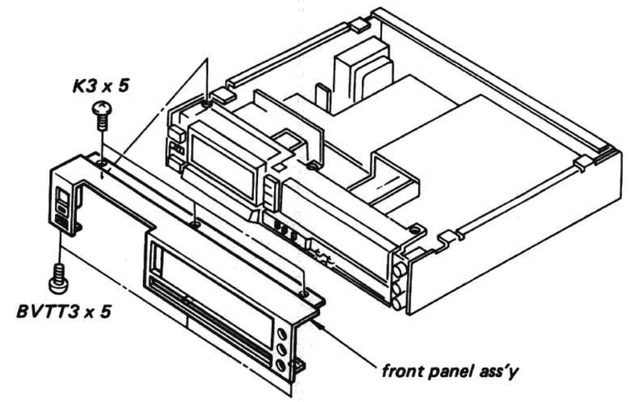

Rec./pb Board Removal

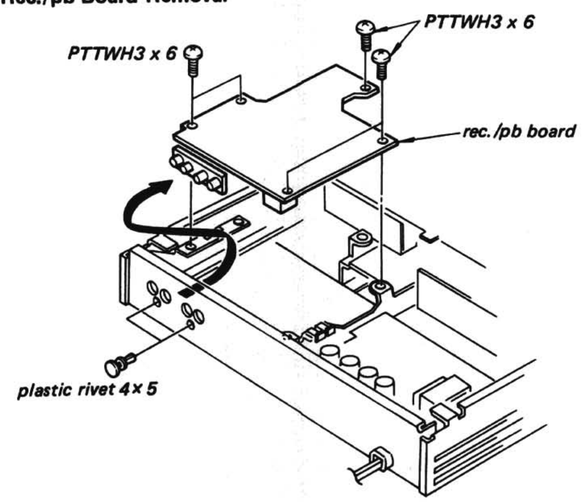

System Control Board Removal

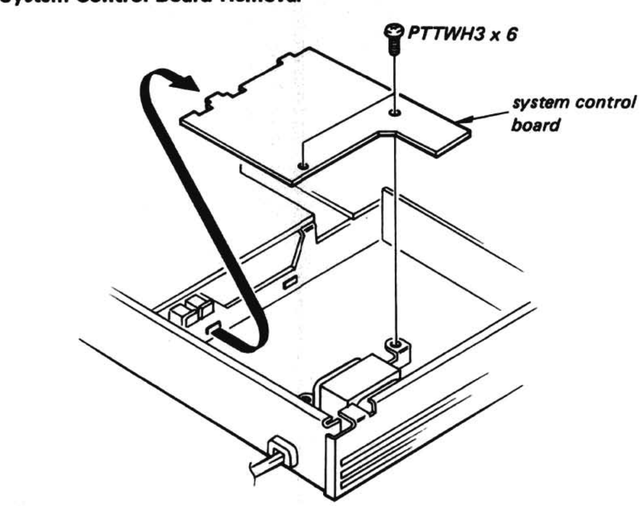

Meter Ass'y Removal

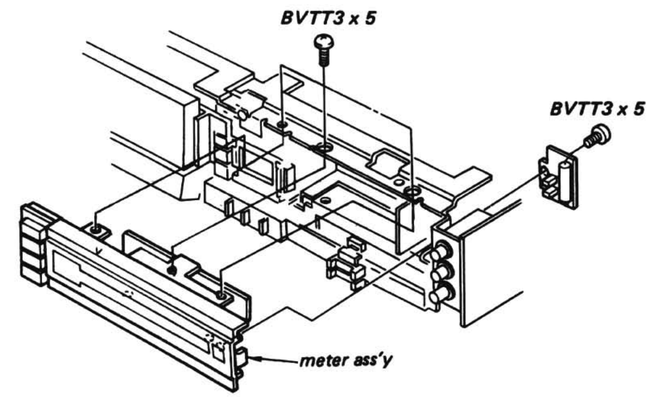

Display Tube Board Removal

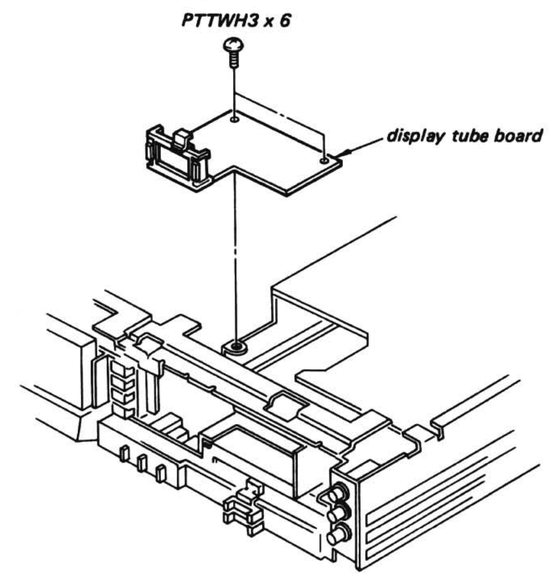

• DECK-MECHANISM'S PARTS LOCATION

Normal parts location is shown for convenience.

1. Front View with Cassette Holder Removed

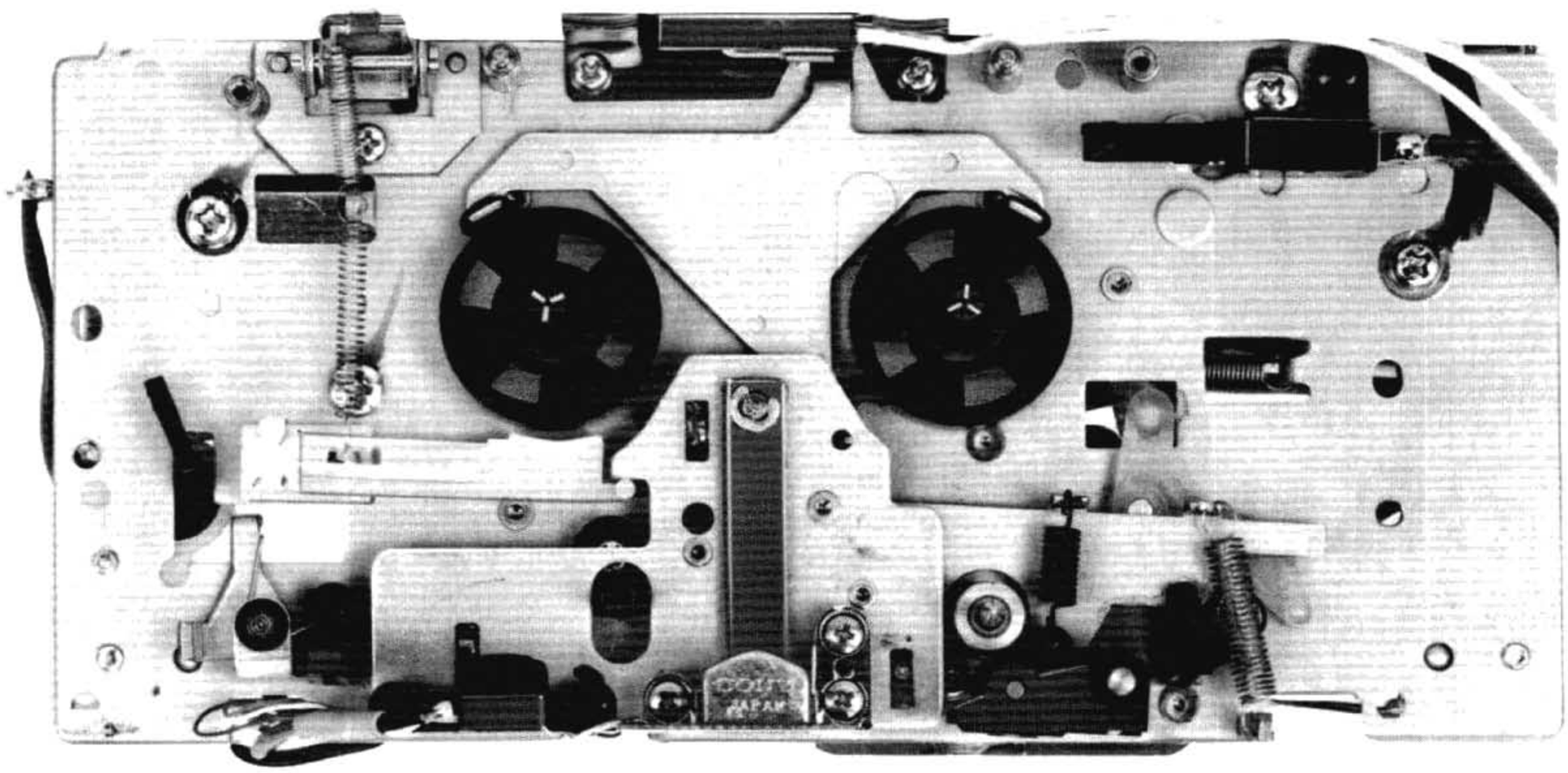

2. Front View with Cassette Holder and Head Base Plate Removed

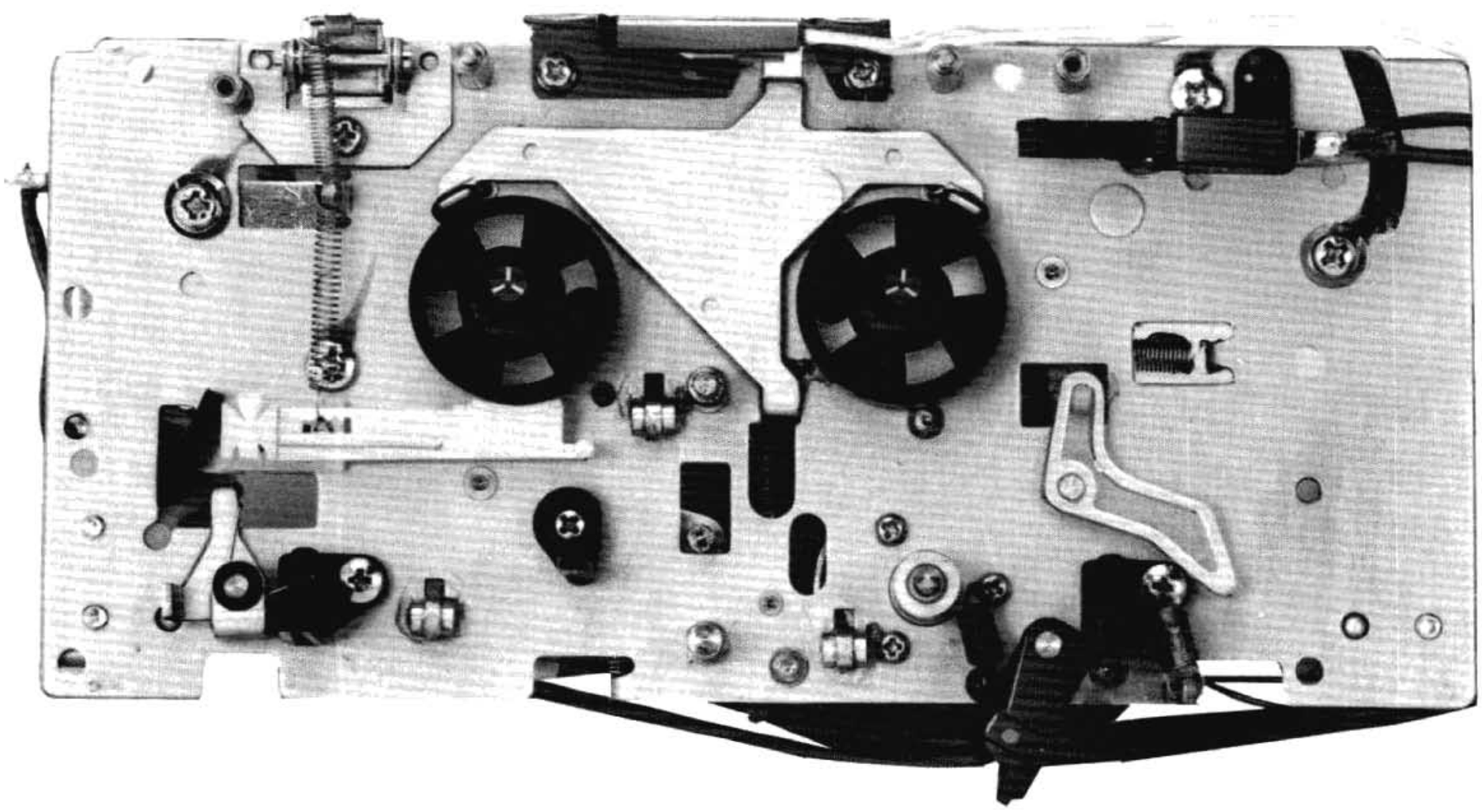

3. Rear View with Cassette Holder Removed

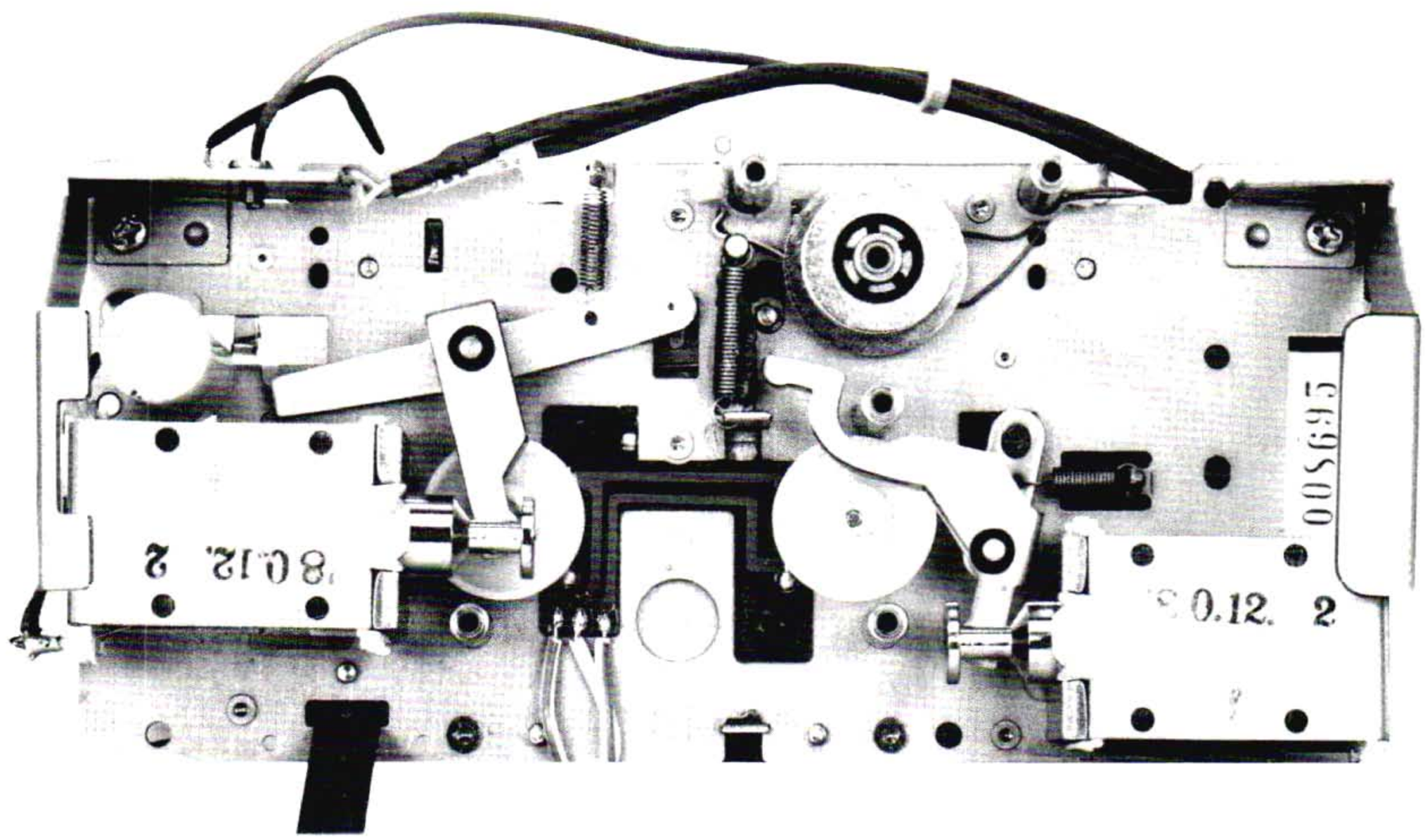

4. Cassette Holder Brackets

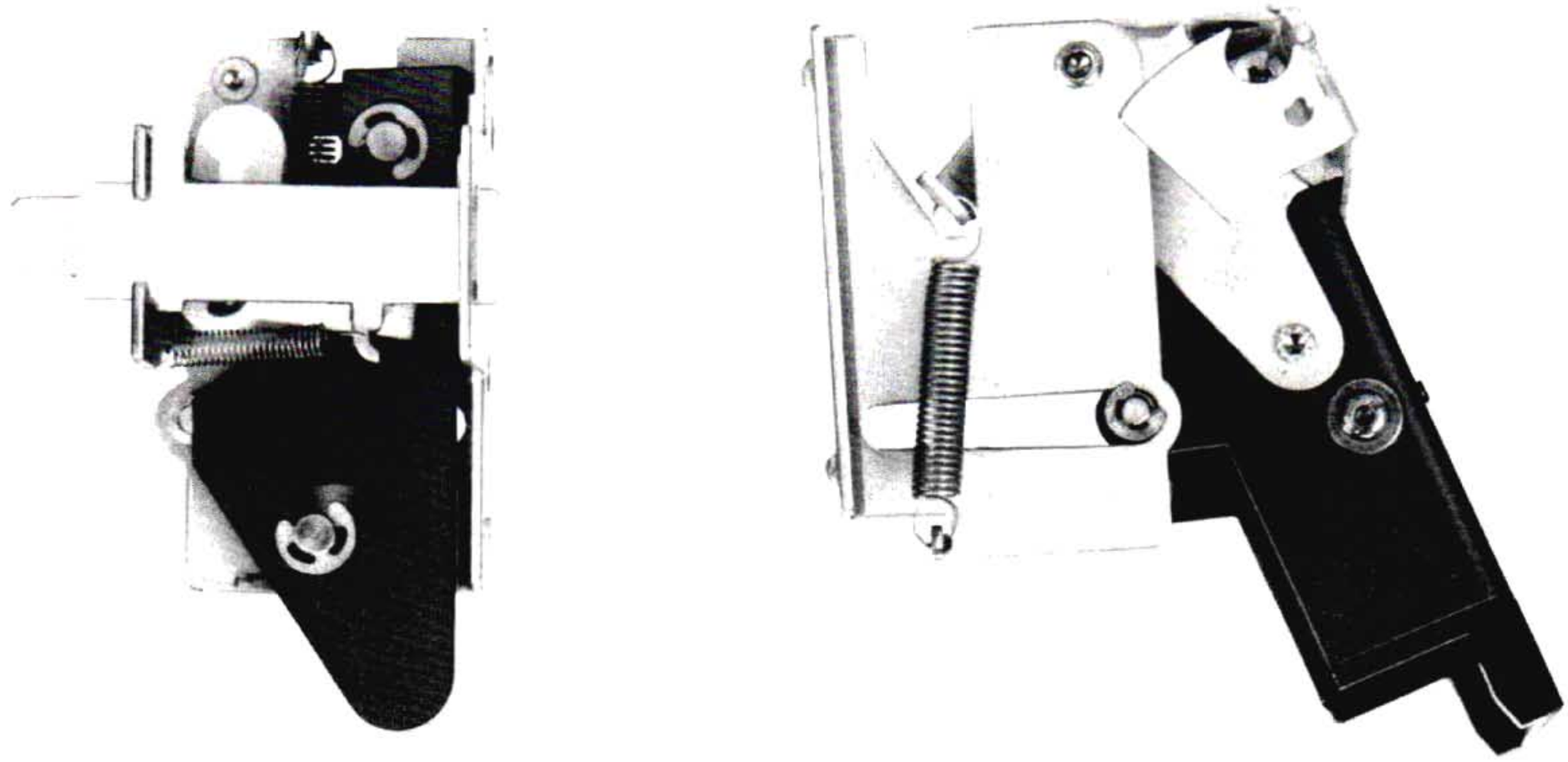

SECTION 3
ADJUSTMENTS

3-1. MECHANICAL ADJUSTMENTS

PRECAUTION

1. Clean the following parts with a denatured-alcohol-moistened swab:

   record/playback head — pinch roller
   erase head — rubber belts
   capstan — idlers

2. Demagnetize the record/playback head with a head demagnetizer.
3. Do not use a magnetized screwdriver for the adjustments.
4. After the adjustments, apply suitable locking compound to the parts adjusted.
5. The adjustments should be performed with the rated power supply voltage unless otherwise noted.

Torque Measurement and Back Tension Torque Adjustment

1.

Torque	Torque meter	Meter reading
Forward	CQ-102C	35–40 g·cm (0.48–0.55 oz·inch)
Back tension	CQ-102C	2.5–5.0 g·cm (0.44–0.07 oz·inch)

2. If the specified back-tension torque is not obtained, change the hooking position of the spring.

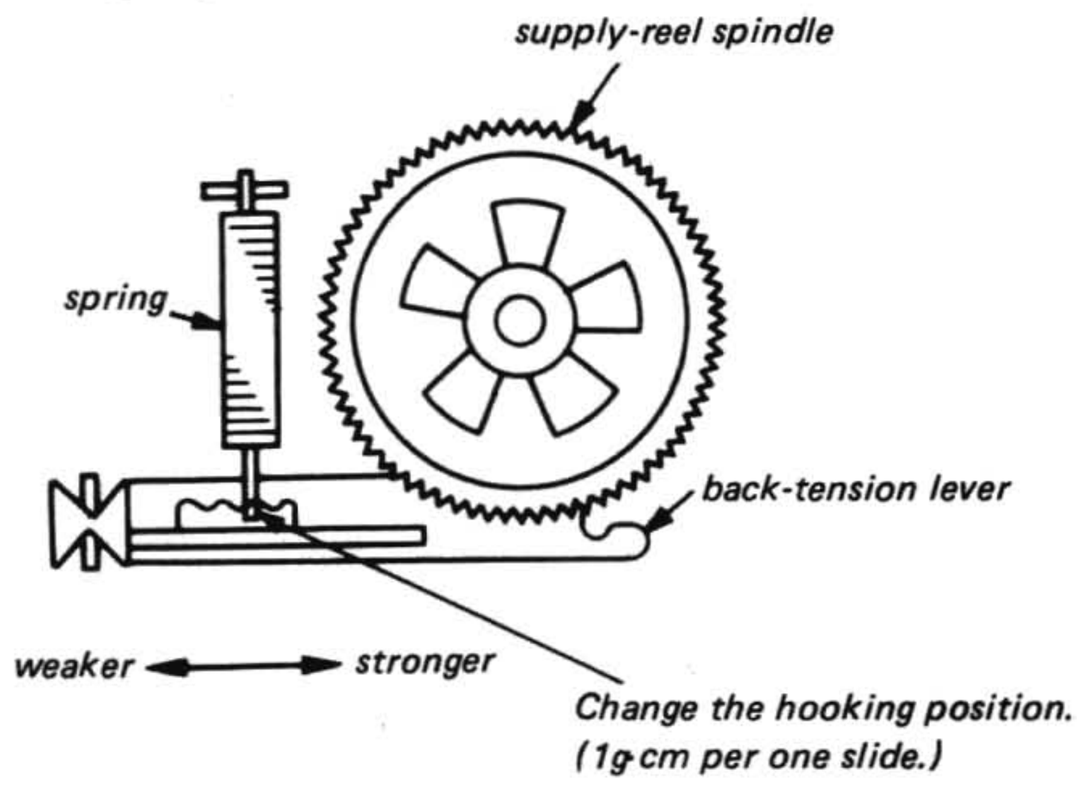

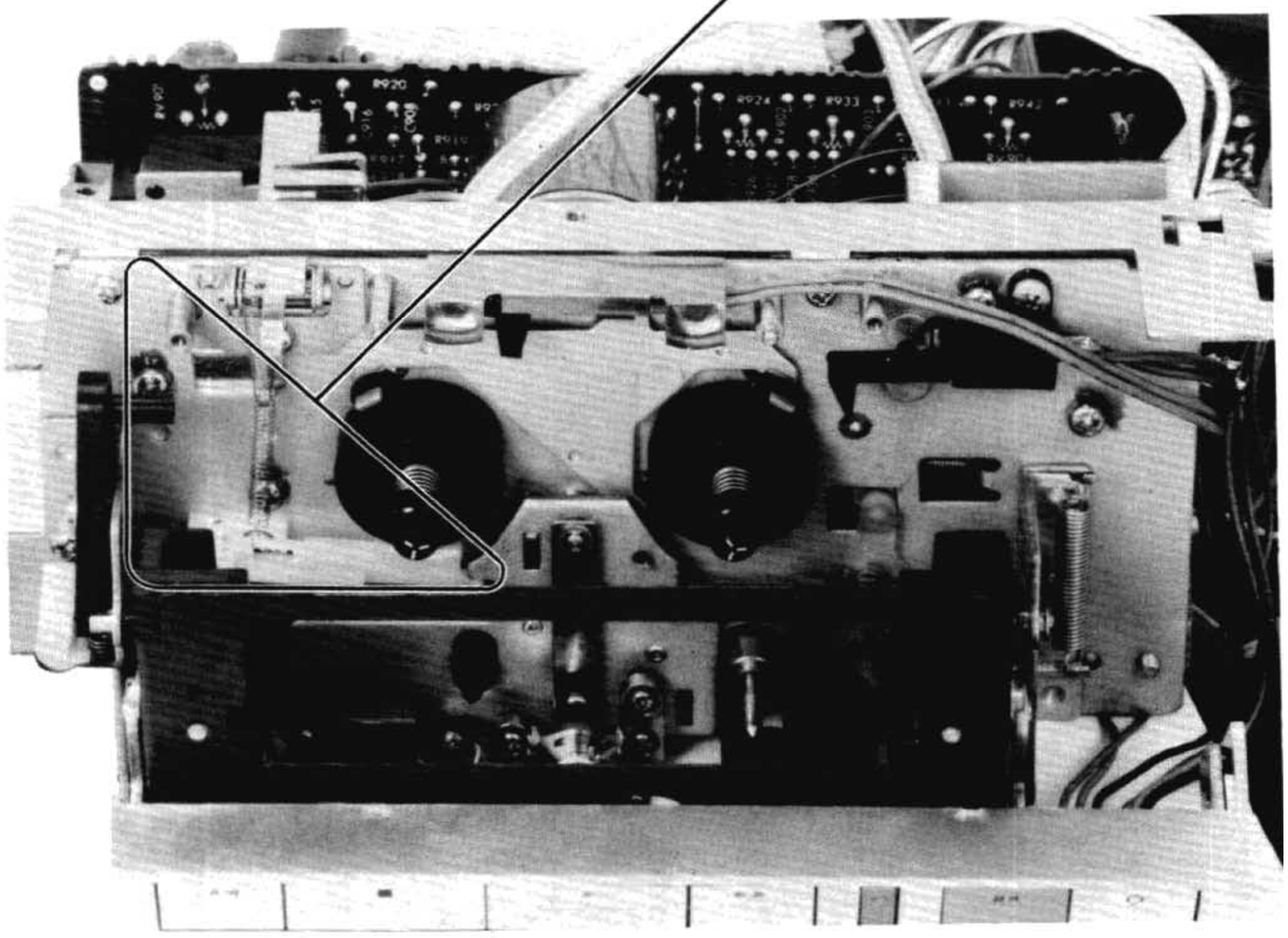

Head Height Adjustment

1. Prepare an adjustment cassette as shown below.

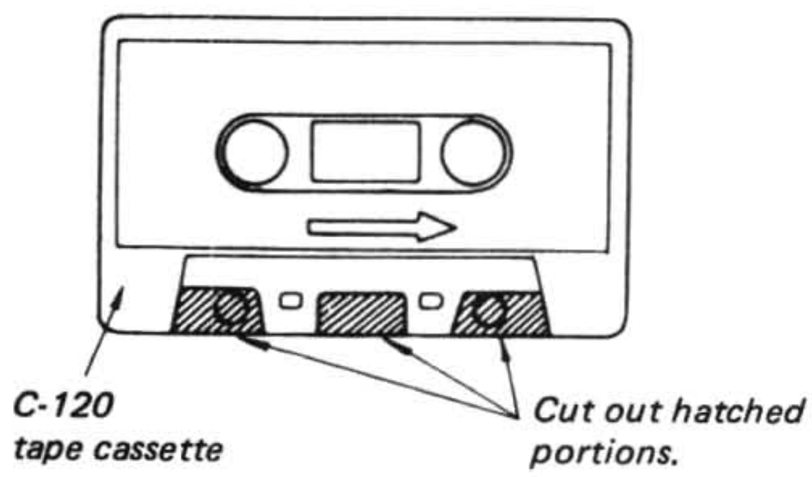

2. In playback mode and viewing from the front, adjust the head heights by using the adjustment screw A, B, C, to eliminate tape curl and tape twist at portions shown by arrow.

3. A) Remove the tape curl at the erase head guides by turning the adjustment screw.
   B) Remove the tape curl at the record/playback head guides by turning the screws A, B and C by the same amount of angle in the same direction.

4. Fix the screws B and C, and the adjustment screw with locking compound.

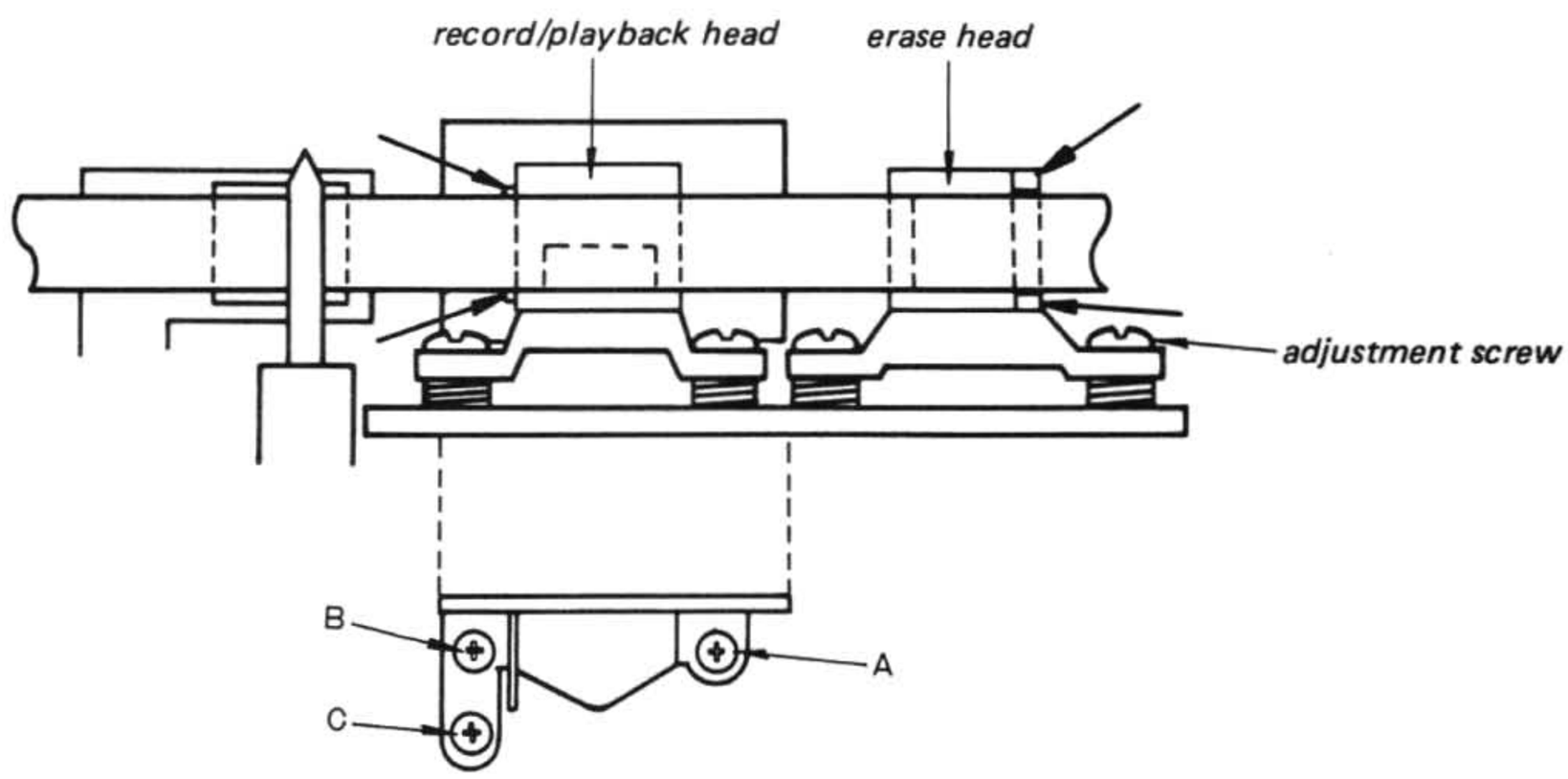

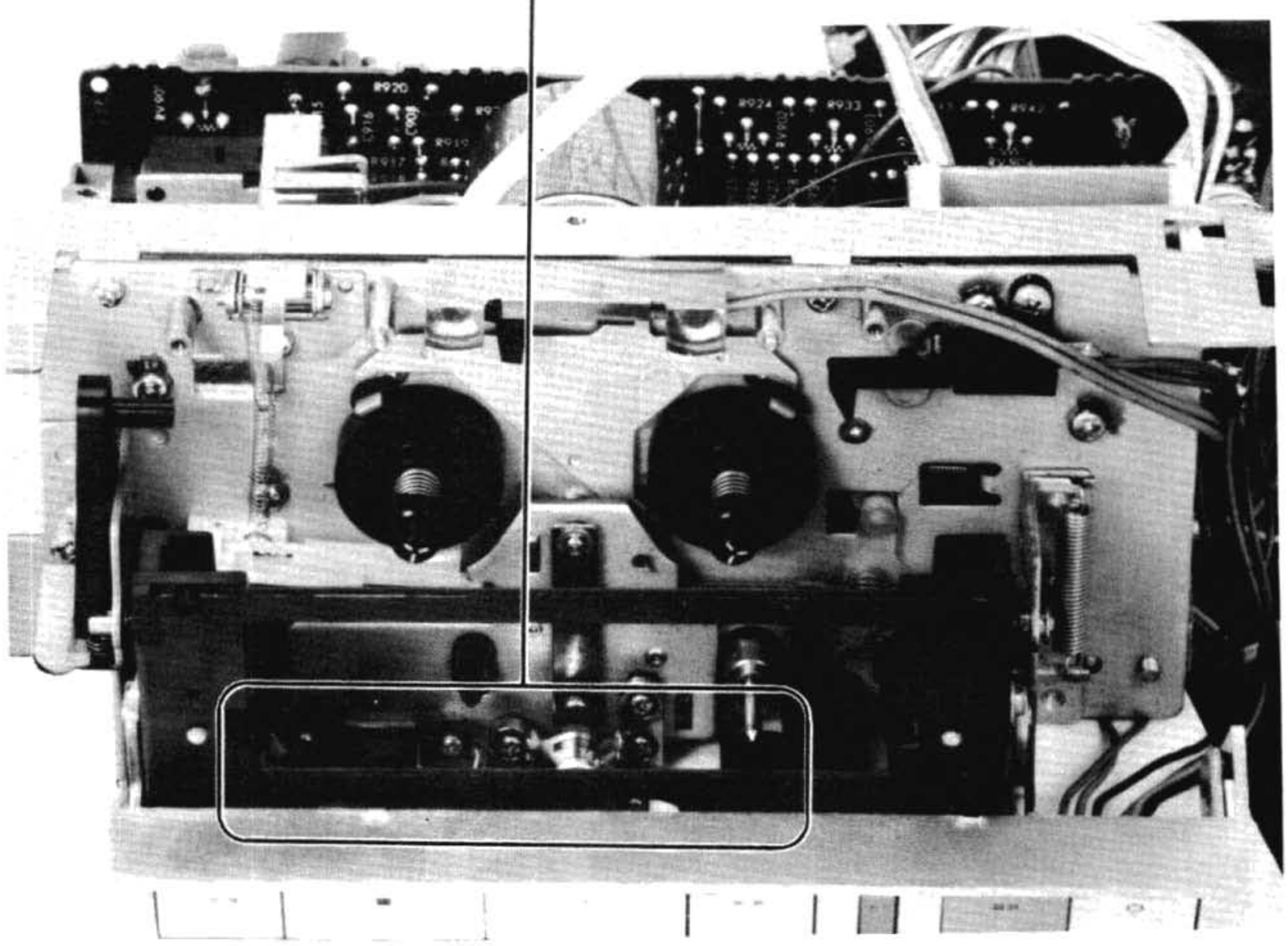

Forward Solenoid Adjustment

Procedure:

1. Set the POWER switch to the on position.
2. Secure the solenoid so that the clearance between the limiter spring and the limiter boss is 0.5 ±0.2mm.
3. Fix the two screws with locking compound.
4. After the adjustment, make sure that the specification is met.

Specification: Clearance between limiter spring and limiter boss : 0.5 ±0.2mm

Brake Solenoid Adjustment

Procedure:

1. Secure the solenoid so that the clearance between the pinch roller and the pinch roller release lever (A) is 0.5 ±0.2mm.
2. Fix the two screws with locking compound.
3. After the adjustment, make sure that the specification is met.

Specification: Clearance between pinch roller and pinch roller release lever : 0.5 ±0.2mm.

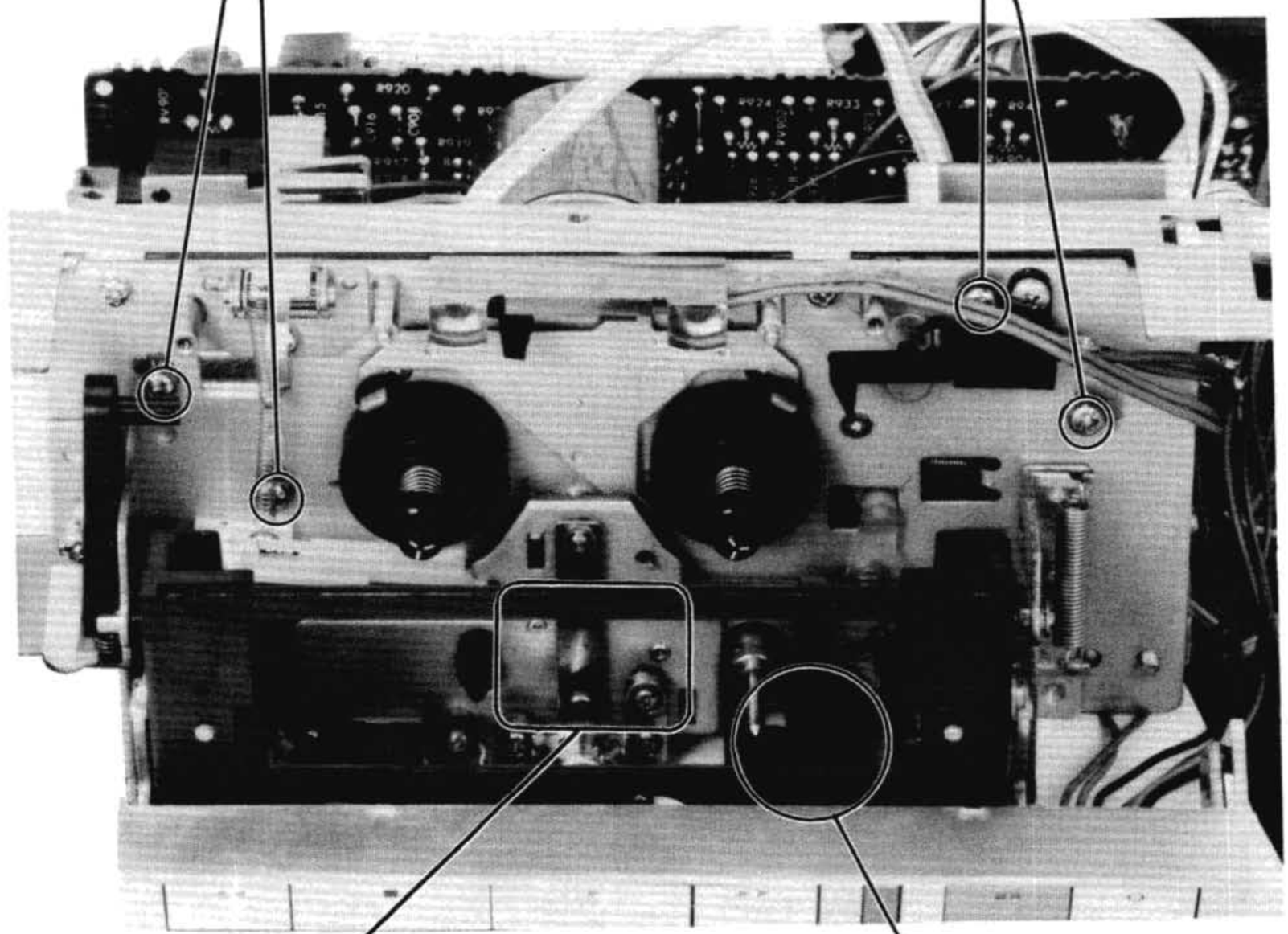

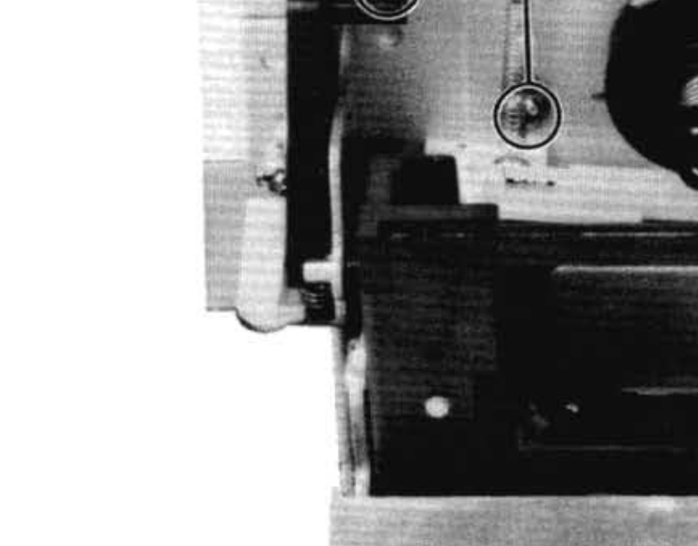

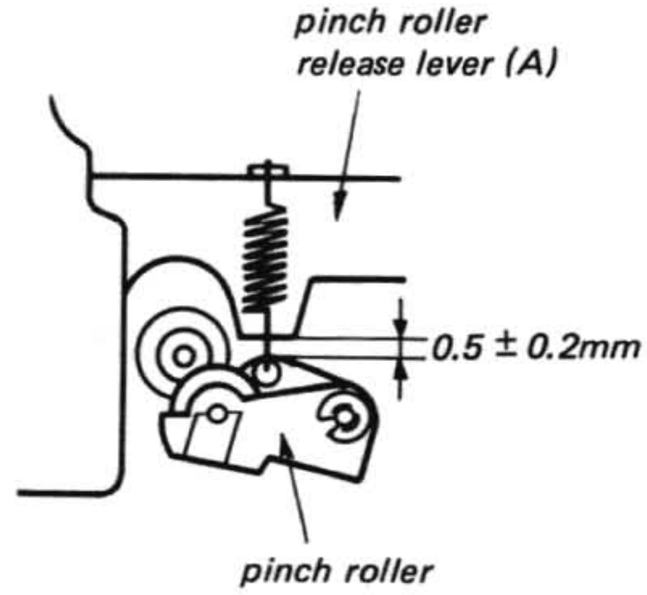

Forward Torque Adjustment

Procedure:

1. Insert the cassette torque meter (Sony CQ-102C).
2. Place the set in the forward mode.
3. Adjust RV801 to meet the specification:

Specifications: Forward Torque : 35 – 40g.cm
(0.48–0.55oz.inch)

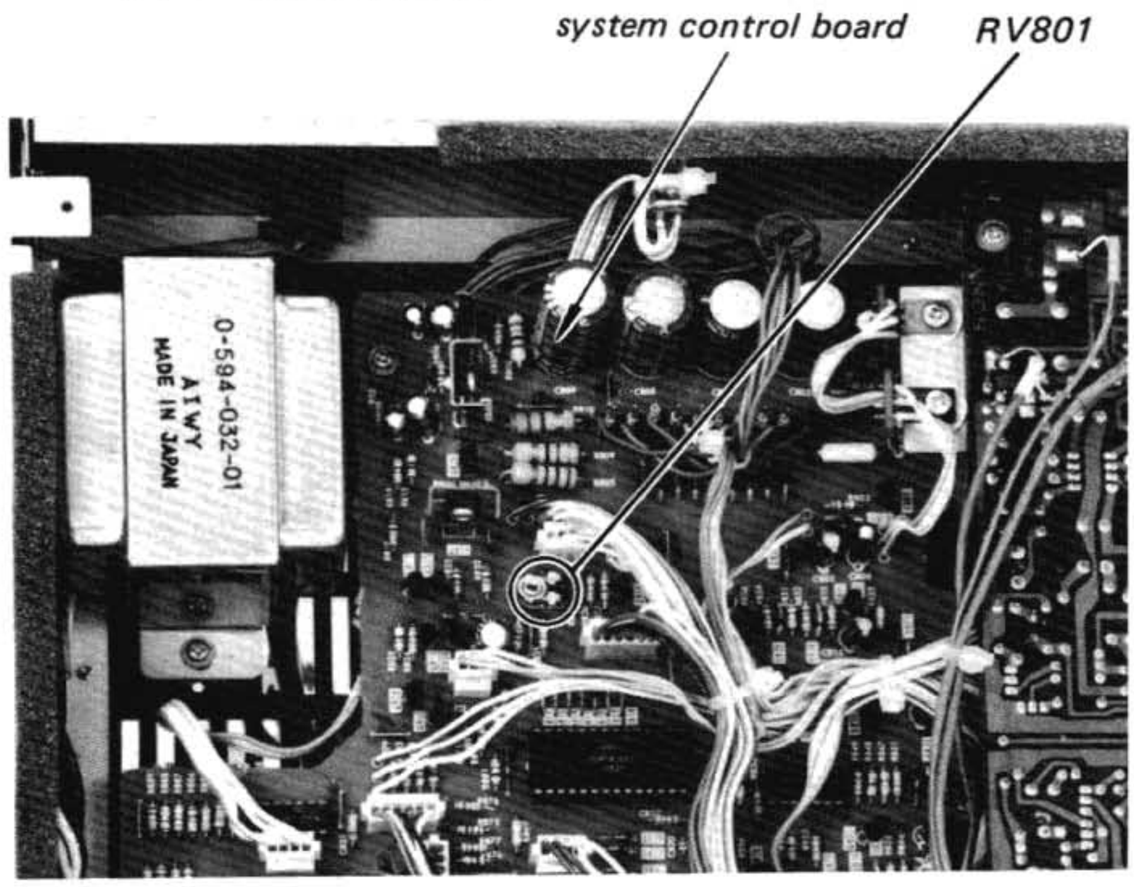

Record Detecting Lever Position Adjustment

Procedure:

1. Bend the record detecting lever so that the clearance between the record detecting lever and the actuator of the miniature switch is 0.1 – 0.3mm.

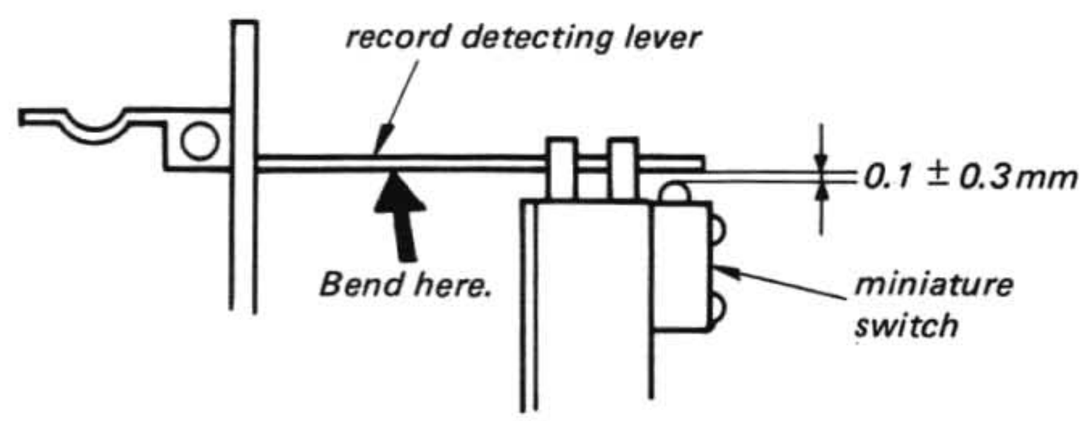

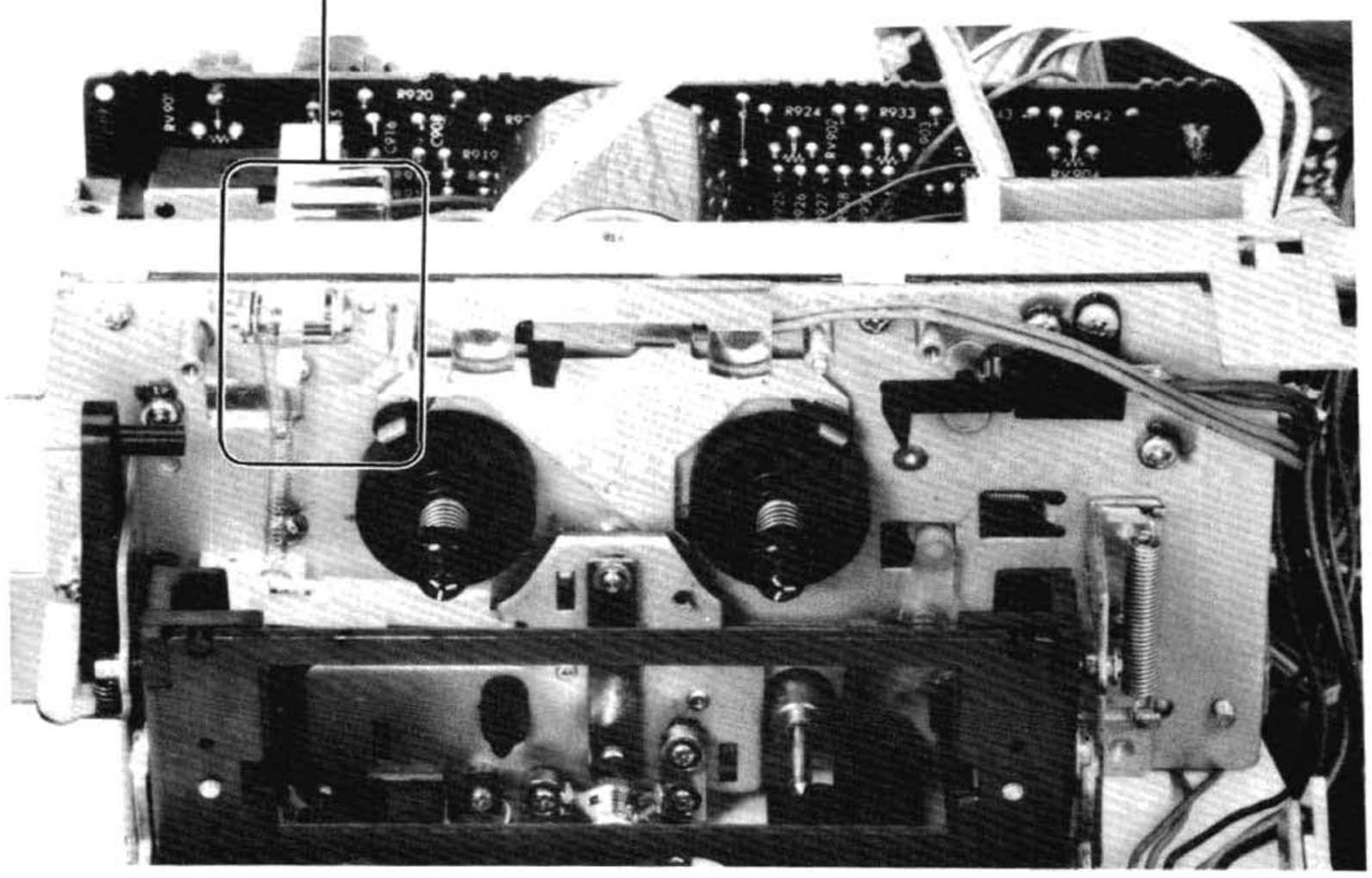

3-2. ELECTRICAL ADJUSTMENTS

Note: The adjustment should be performed in the order given in this service manual. The adjustments should be performed for both L-CH and R-CH.

- Set the BIAS and EQ switches according to the tape as follows.

Tape	TAPE switch
CS-10	TYPE I
CS-20	TYPE II
CS-30	TYPE III
CS-40	TYPE IV

- Switches and controls should be set as follows unless otherwise specified.

DOLBY NR switch:	OFF
TAPE switch:	TYPE I
TIMER switch:	OFF

- Standard Record:

  Deliver the standard input signal level to the input jack and set the REC LEVEL control to obtain the standard output signal level.

Standard Input Level

	MIC	LINE IN
source impedance	300Ω	10kΩ
input level	0.77mV (−60dB)	0.25V (−10dB)

Standard Output Level

	HEADPHONES	LINE OUT
load impedance	8Ω	47kΩ
output level	39mV (−27dB)	0.44V (−5dB)

Record/playback Head Azimuth Adjustment

Procedure:

1. Mode: playback

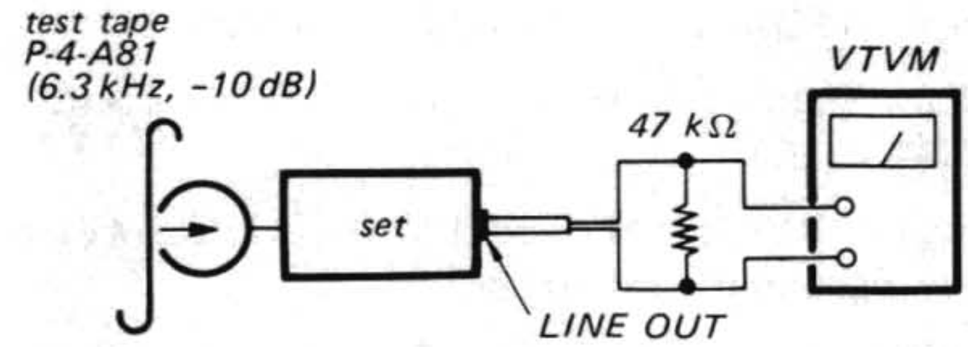

2. Turn the adjustment screw for the maximum output levels. If these levels do not match, turn the adjustment screw until both of output levels match together within 0.5 dB.

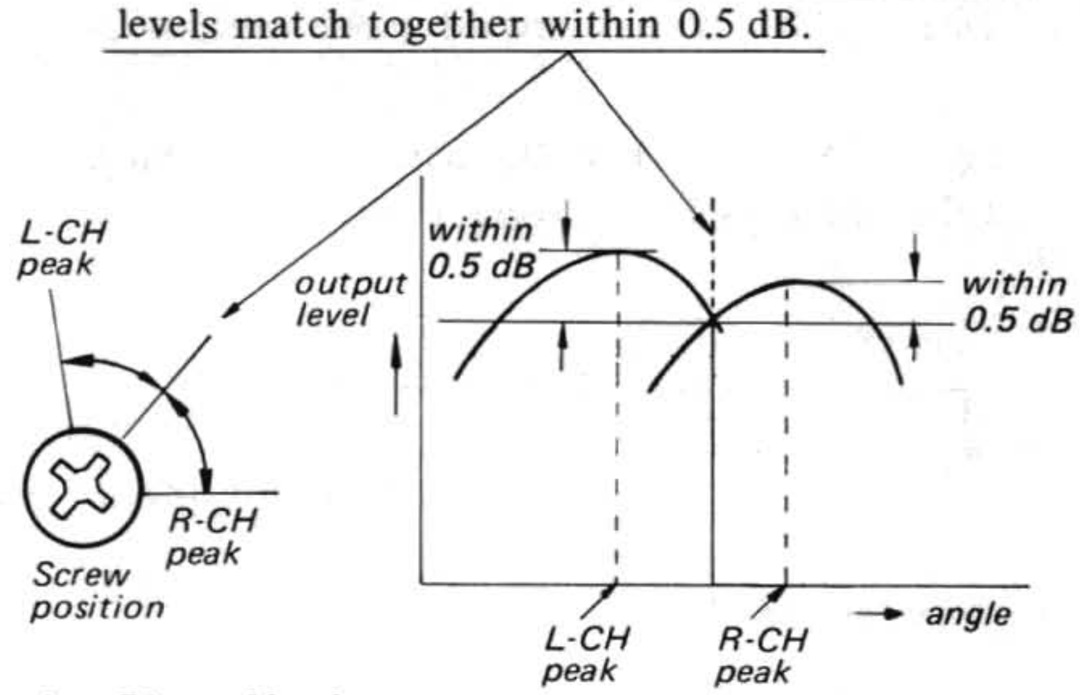

3. Phase Check
   Mode: playback

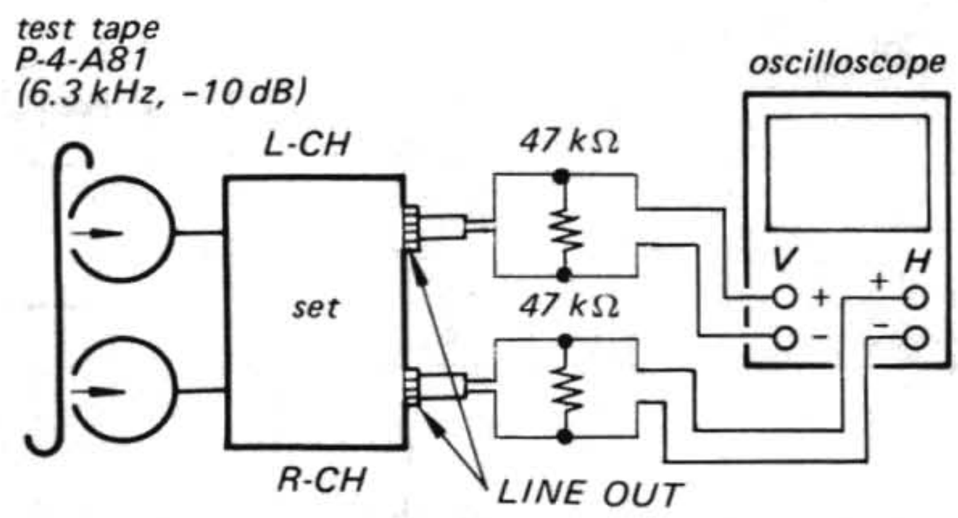

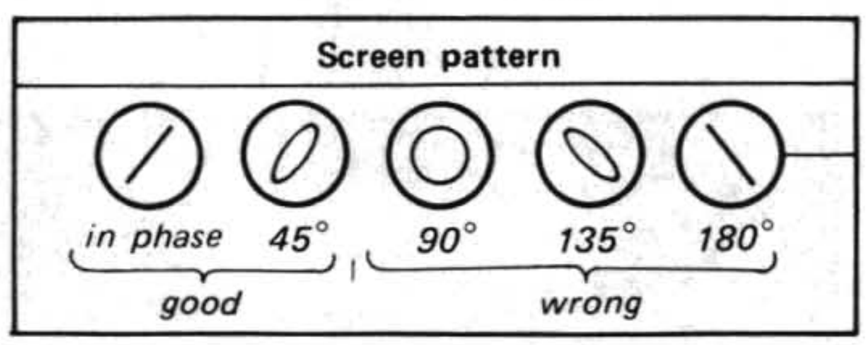

Adjustment Location:

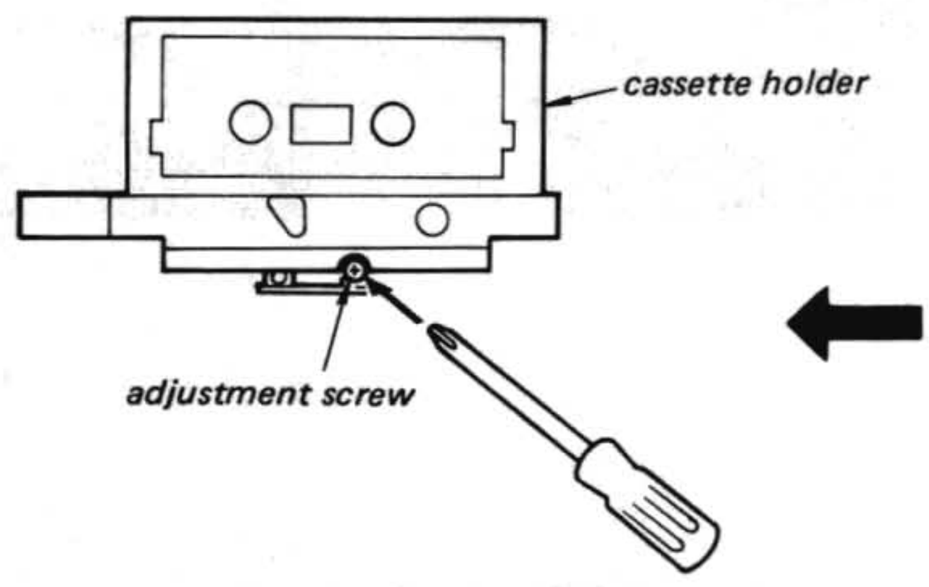

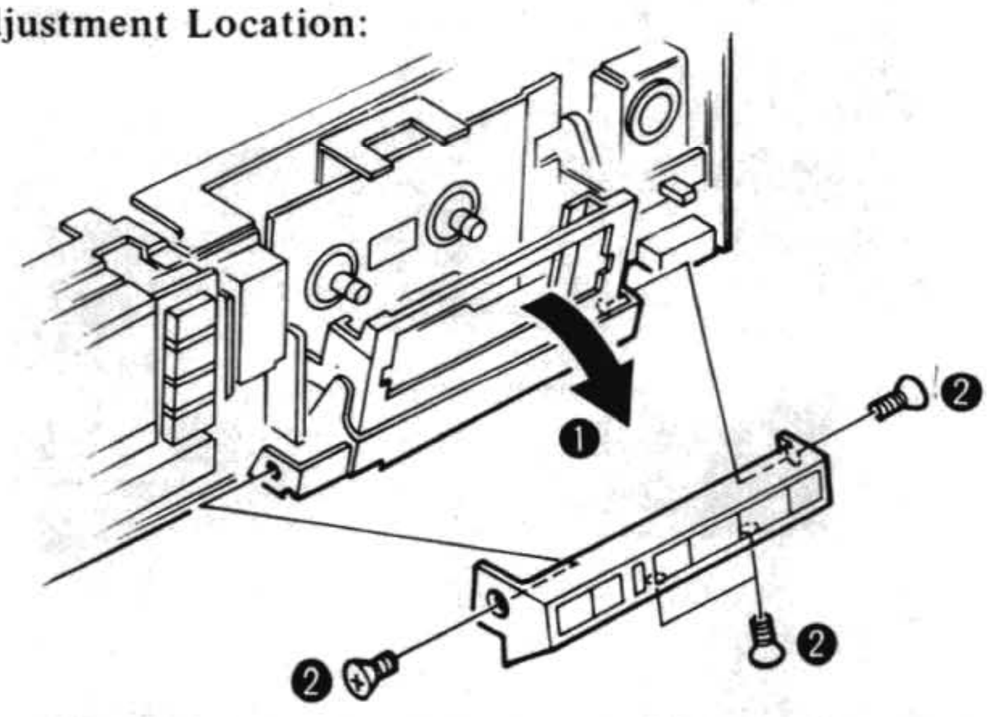

Reel Motor Adjustment

Procedure:

1. Set the POWER siwtch to the on position.
2. Turn S901 on the servo amp board fully clockwise (TEST side).
3. Adjust RV905 ($\phi 1$) and RV904 ($\phi 2$) for 4Vp-p reading on the oscilloscope.
4. Adjust RV902 ($\phi 1$) and RV903 ($\phi 2$) for 0V reading on the oscilloscope.
5. Turn S901 fully counterclockwise (SERVO side).
6. Place the set in the forward mode with a tape cassette loaded.
7. Adjust RV901 so that the narrow pulse appears at the positive side as shown below.

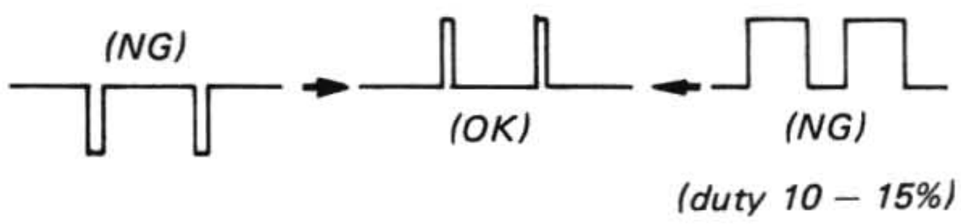

Adjustment Location:

– servo amp board –

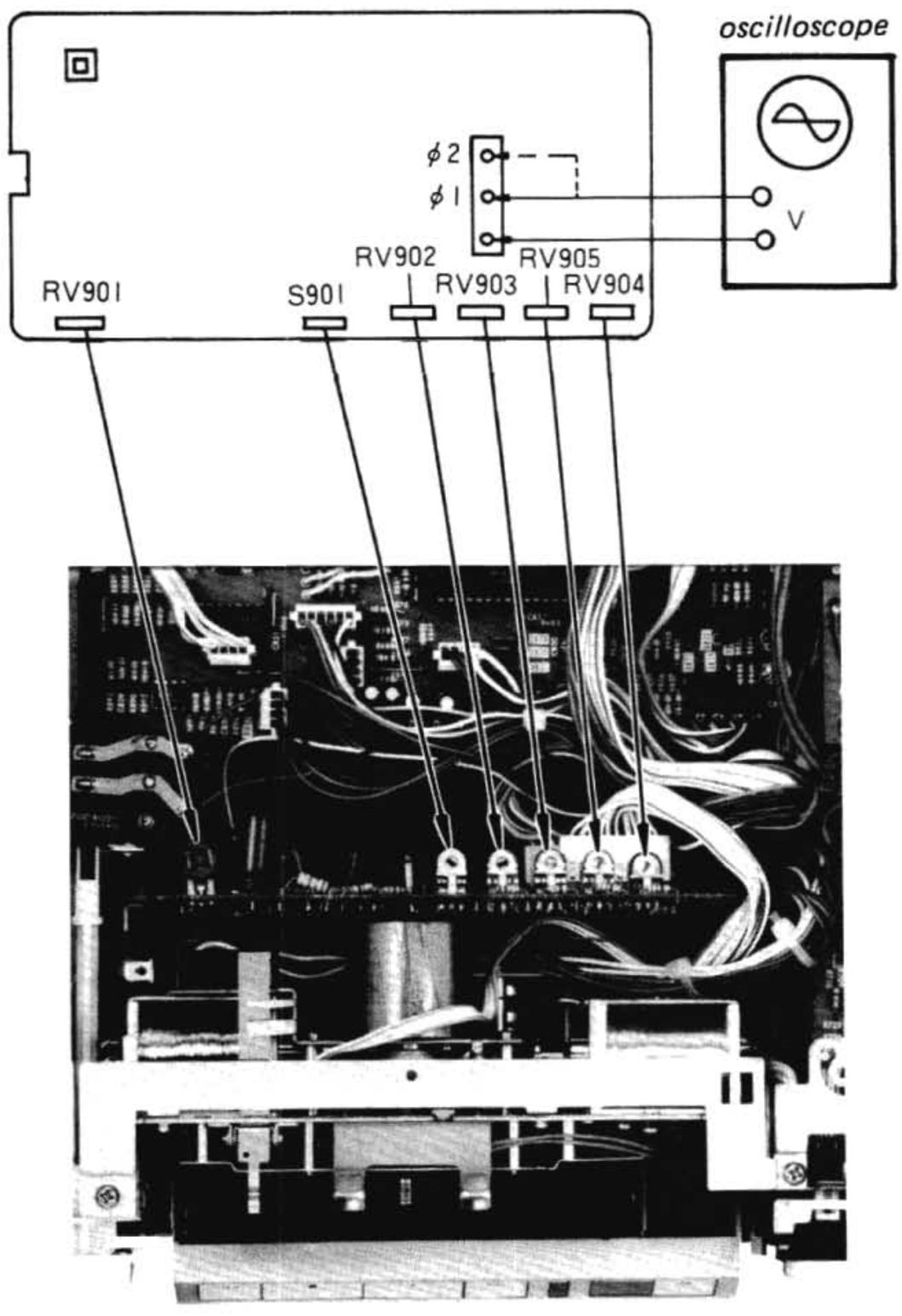

Playback Level Adjustment

Procedure:

Mode: playback

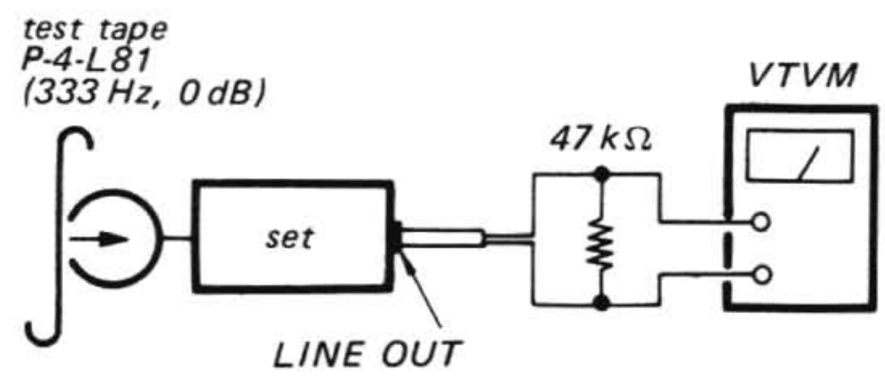

Specification:

LINE OUT level : 0.52 ~ 0.59 V [TYPE I]
(–3.5 ~ –2.5 dB)

Level difference between channels :
less than 0.5 dB

Check that the LINE OUT level does not change in playback mode while changing the mode from playback to stop several times.

Adjustment Location:

– record/playback board –

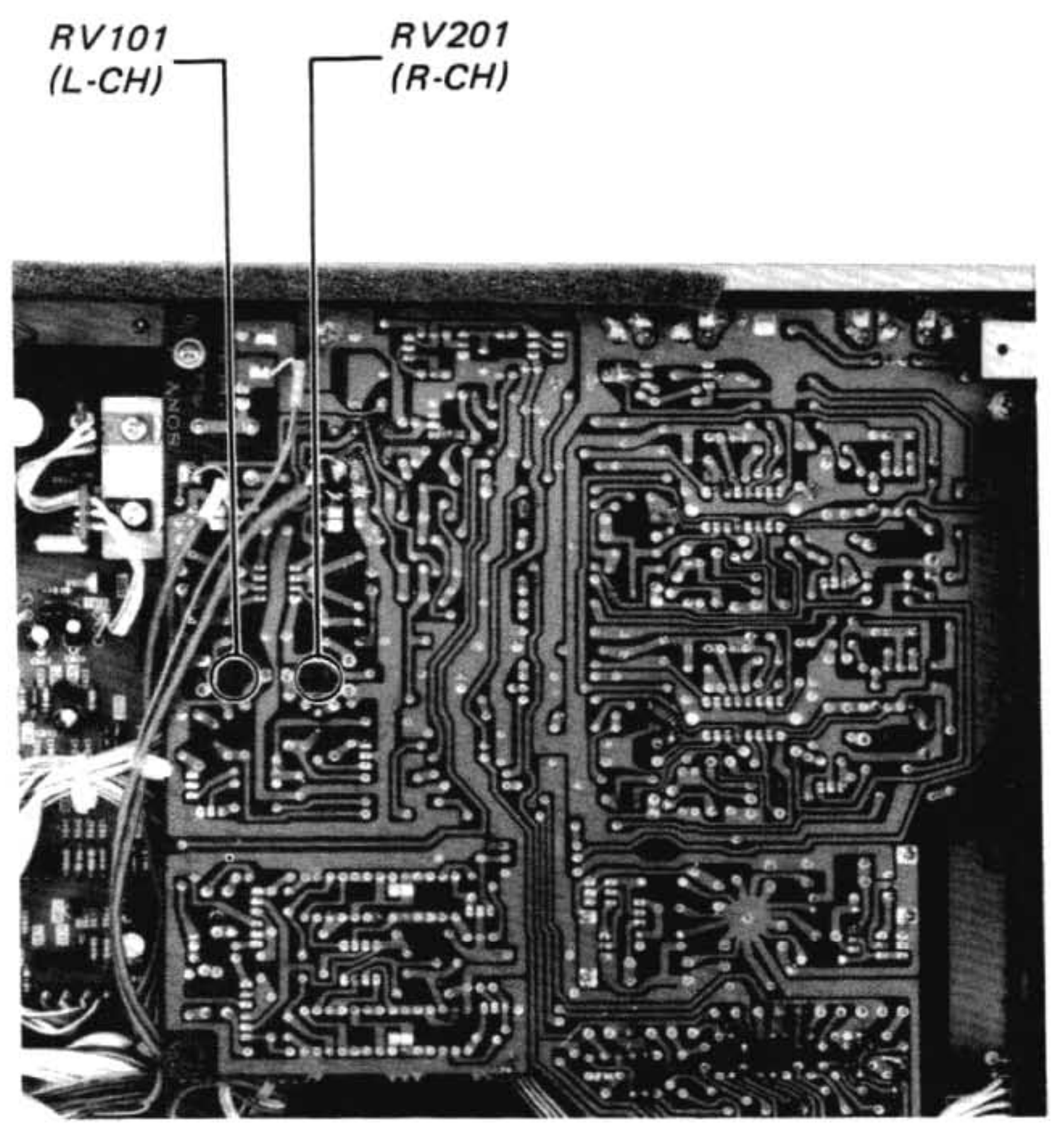

Playback Equalizer Adjustment

Procedure:

Mode: playback

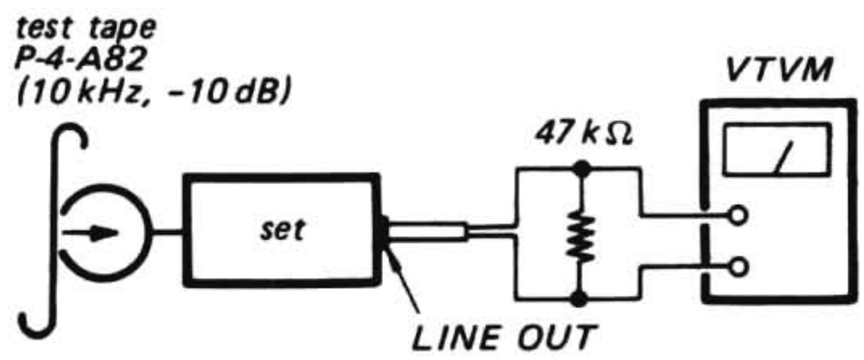

Specification:

LINE OUT level (TYPE I) :
0.12 ~ 0.25 V (−16 ~ −10 dB)
LINE OUT level (TYPE II, III, IV) :
0.08 ~ 0.15 V (−20 ~ −14 dB)
Level difference between channels :
less than 3 dB

Adjustment Location:

– record/playback board –

Pattern connection	LINE OUT level
open	↑ up
Ⓐ	↓ down

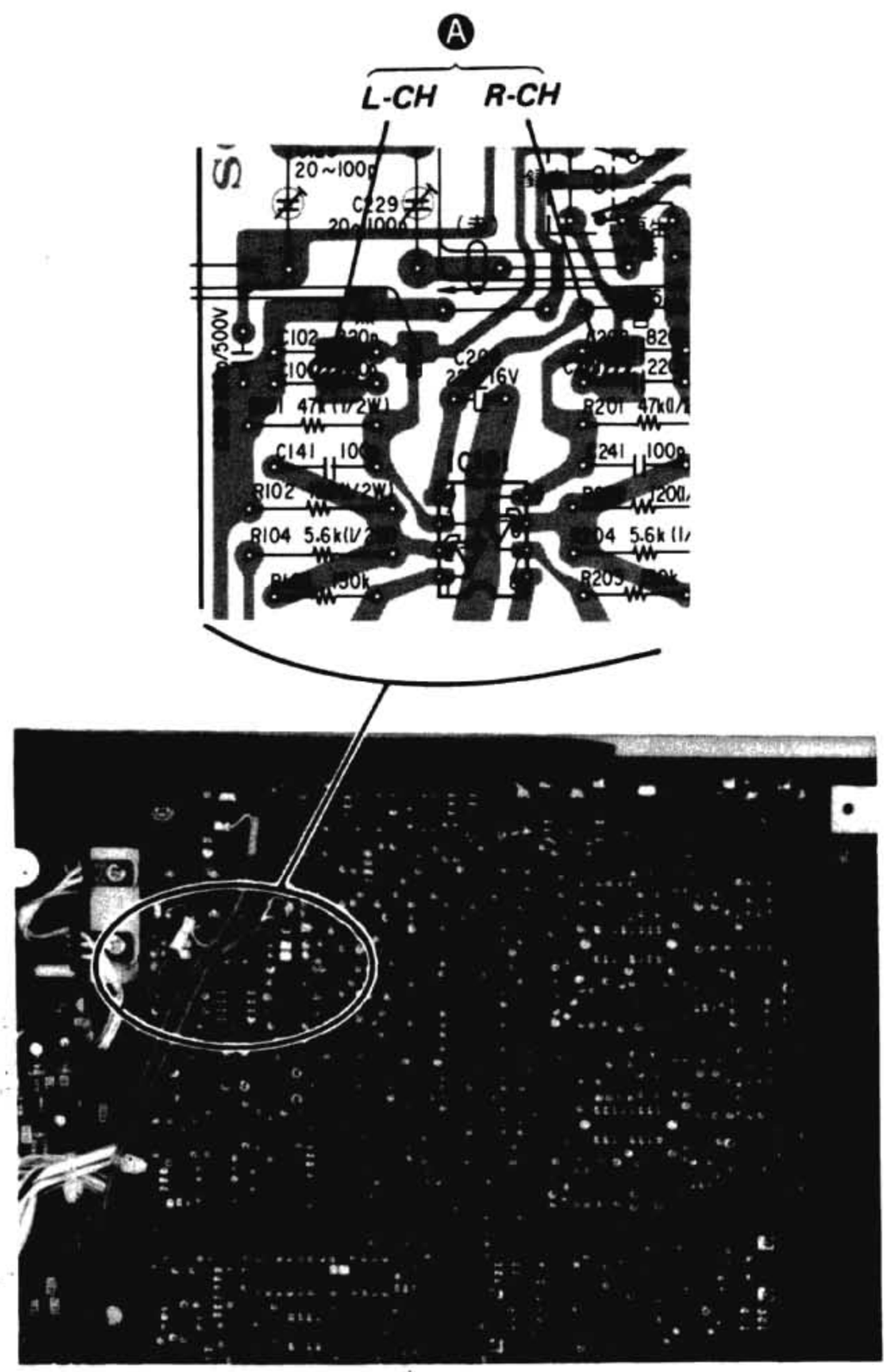

Record Bias Adjustment

Setting:

REC LEVEL control: standard record
(See page 21)

Procedure:

1. Mode: record

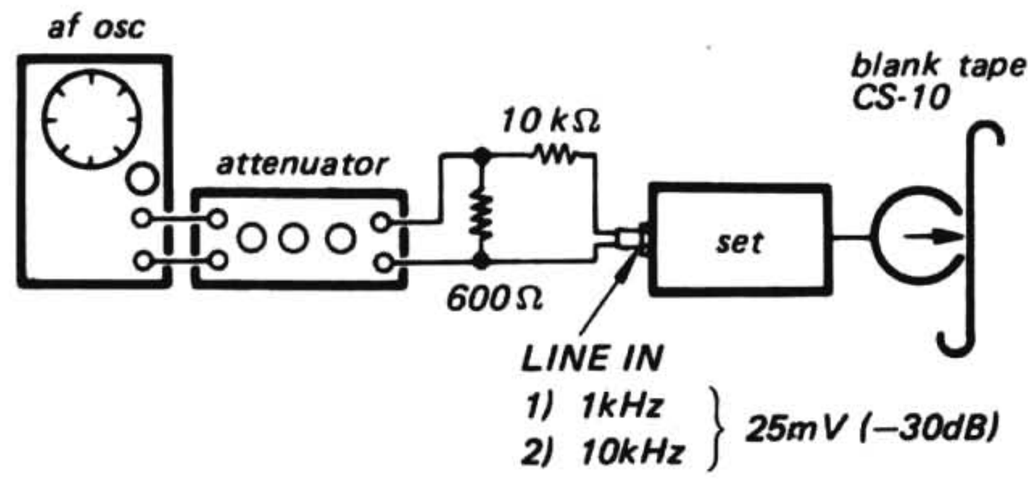

2. Mode: playback

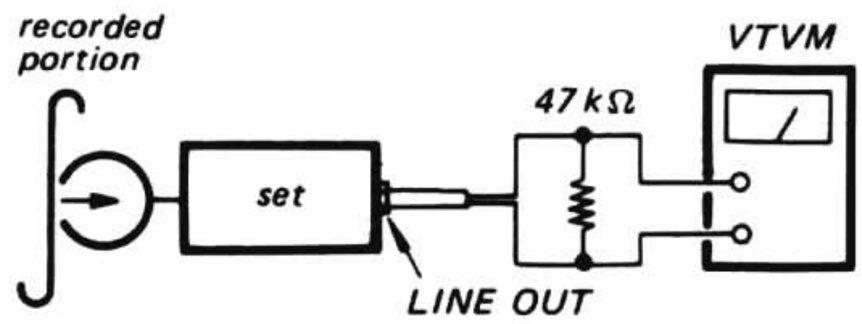

Adjust C129 (L-CH) and C229 (R-CH) so that the LINE OUT level of 10kHz signal is 0dB relative to that of 1kHz.

Adjustment Location:

– record/playback board –

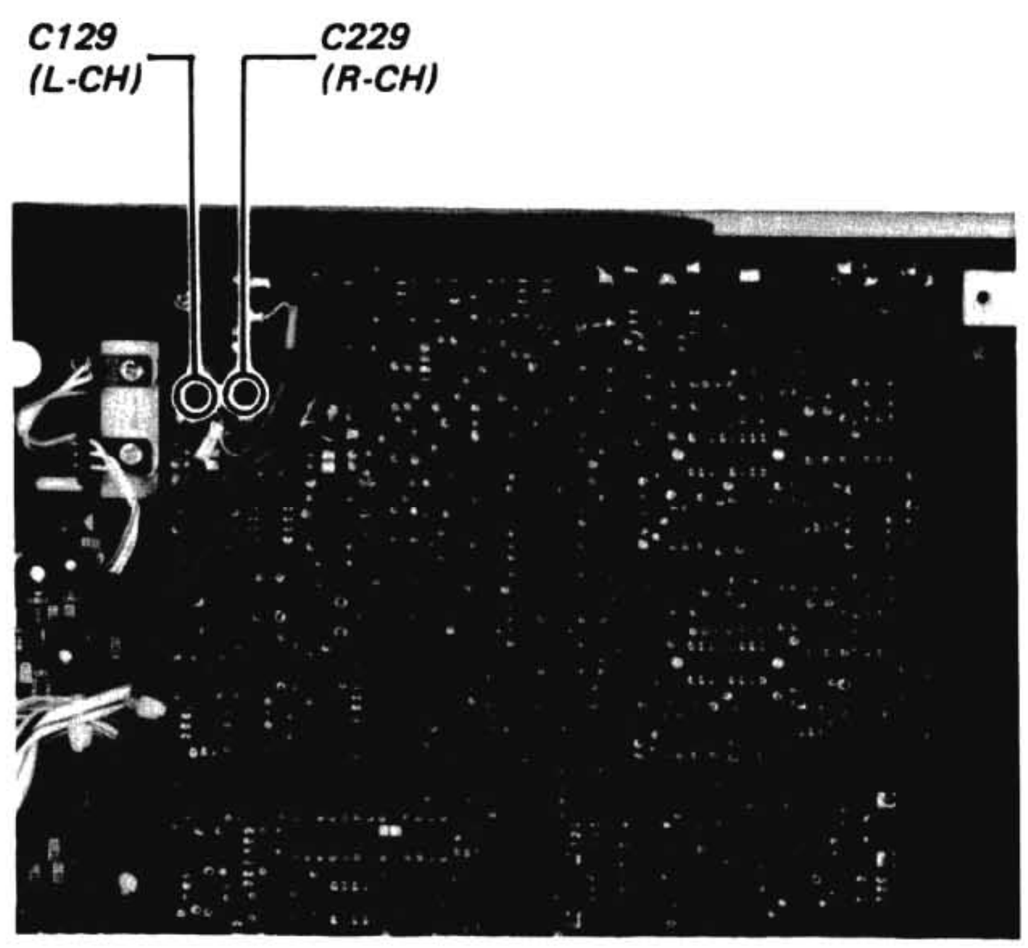

Record Level Adjustment

Setting:

REC LEVEL control: standard record
(See page 21)

Procedure:

1. Mode: record

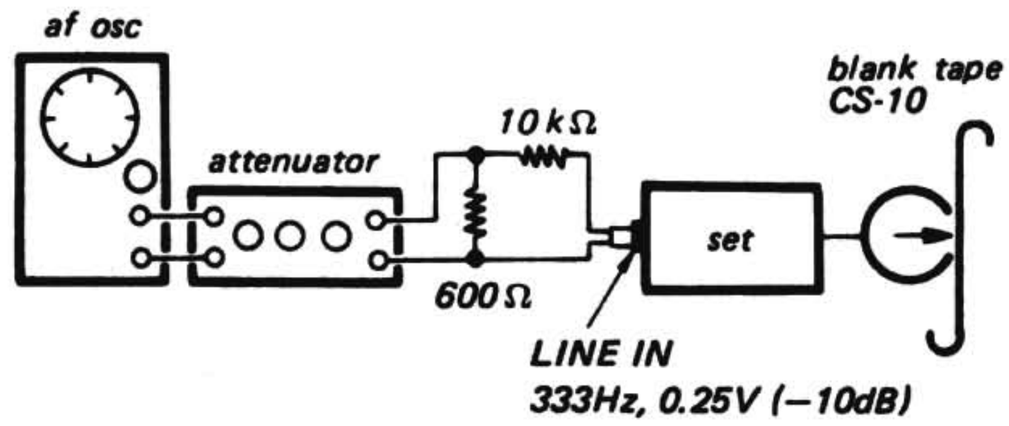

2. Mode: playback

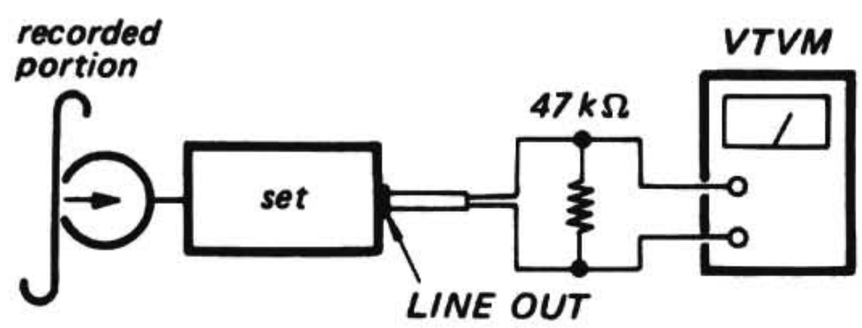

Specification:

LINE OUT level : 0.41 ~ 0.46 V
(−5.5 ~ −4.5 dB)

Adjustment Location:

– record/playback board –

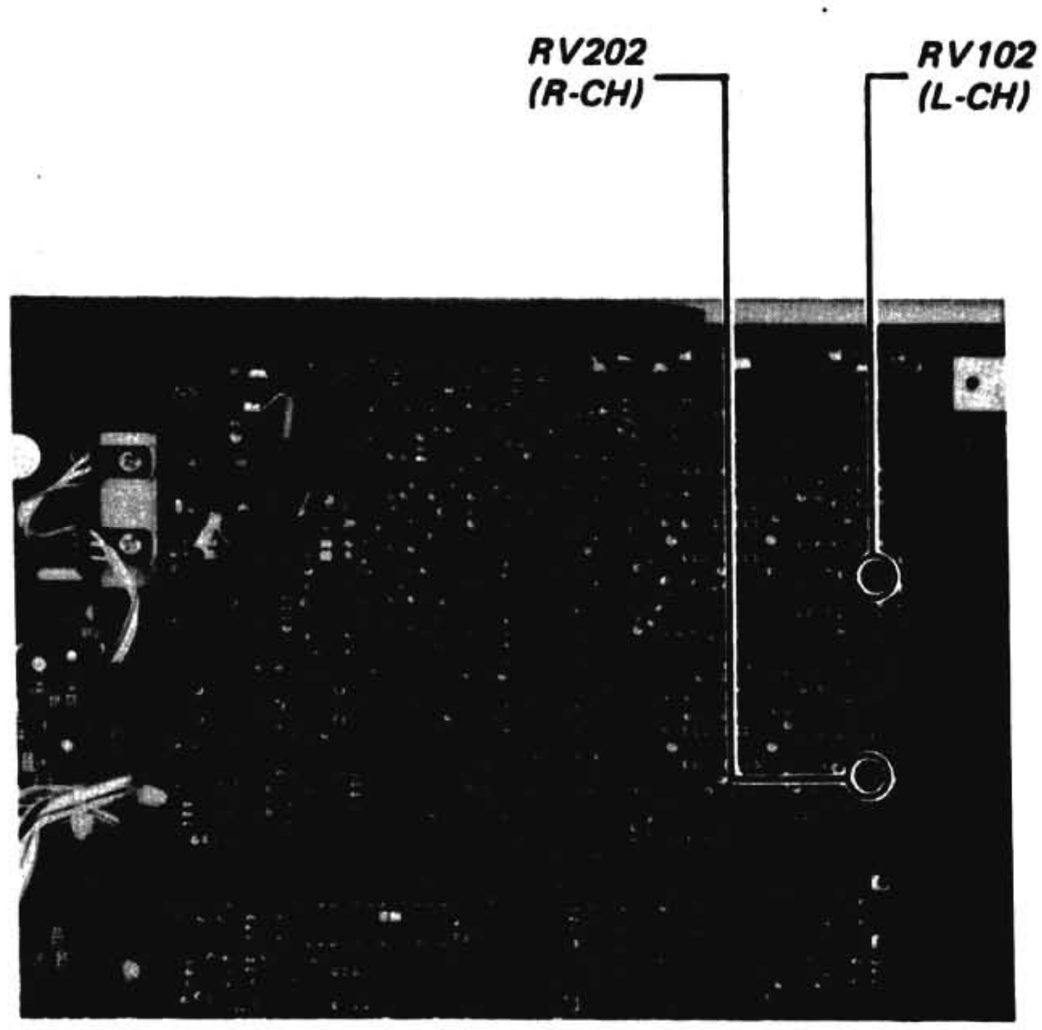

Level Meter Calibration

Procedure:

1. Mode: record

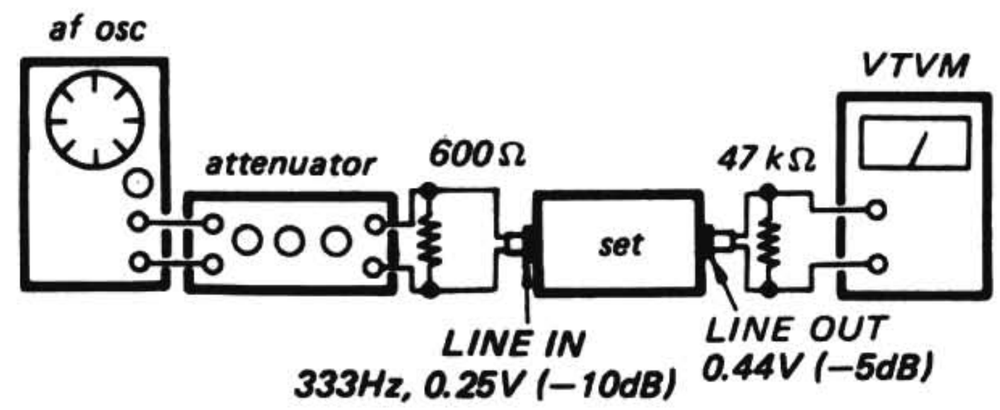

1. Set the REC LEVEL control so that the LINE OUT level is 0.44V (−5dB).
2. Adjust RV103 (L-CH) and RV203 (R-CH) so that the LEDs including 0VU (−4dB) light up.

   Note: Slide the REC LEVEL control rightward slowly.
   (Be careful to peakhold indication)

Adjustment Location:

– record/playback board –

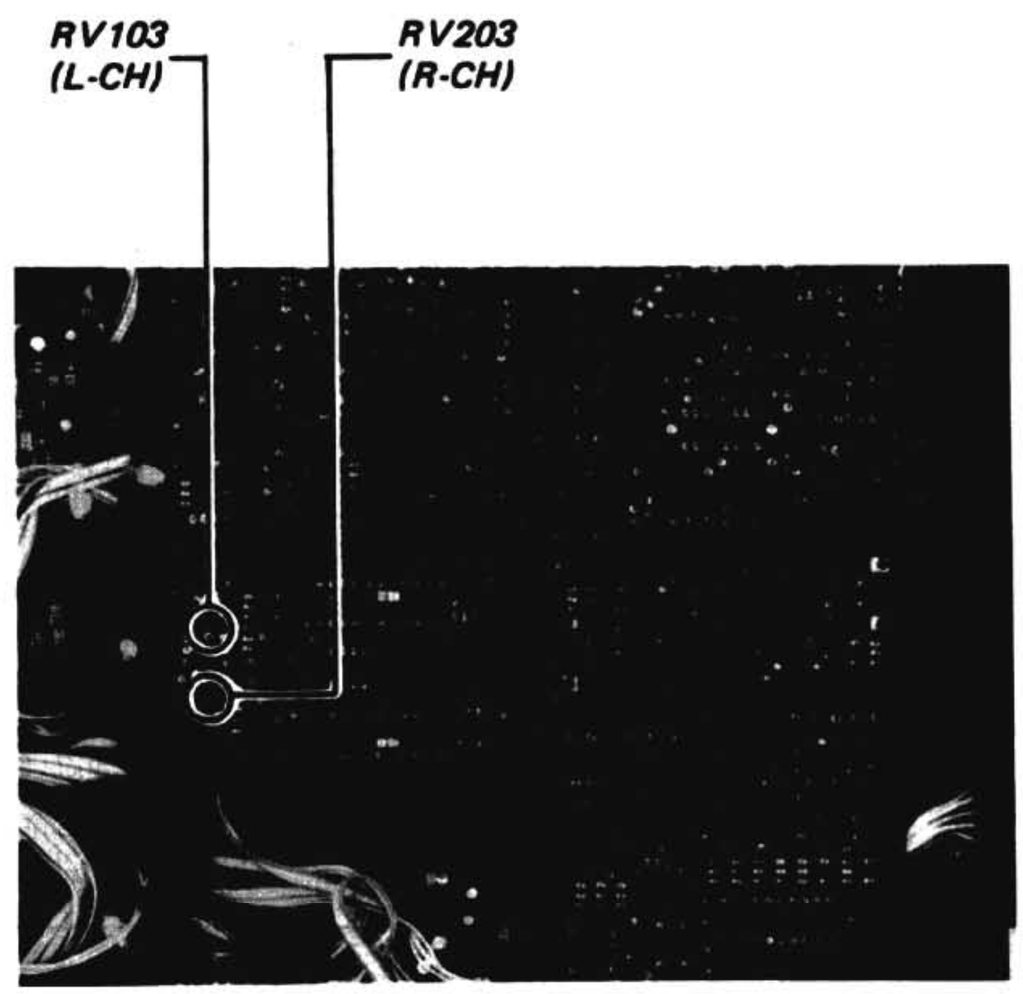

Table 8. IC801's TERMINAL NAME, WAVEFORM AND/OR VOLTAGES

PIN No.	WAVEFORM AND/OR VOLTAGES
①	● lamp drive record mode : DC 4.5V stop mode : DC 0V
②	▶ lamp drive record and forward modes : DC 4.5V stop mode : DC 0V
③	❚❚ lamp drive pause mode : DC 4.6V pause mode : DC 0V
④	■ switch input ($\overline{STOP}$) DC 5.2V 0V stop button kept pressed : DC 0V
⑤	◀◀ switch input ($\overline{REWIND}$) DC 5.2V 0V rewind button kept pressed stop mode : DC 4V
⑥	▶▶ switch Input ($\overline{FAST\ FORWARD}$) DC 5.2V 0V fast-forward button kept pressed stop mode : DC 0V
⑦	▶ switch input ($\overline{FORWARD}$) DC 5.2V DC 0.4V forward button kept pressed
⑧	● switch input ($\overline{RECORD}$) DC 5.2V DC 0.8V record button kept pressed stop mode : DC 4.6V
⑨	❚❚ switch input ($\overline{PAUSE}$) DC 5.2V DC 0.4V pause button kept pressed stop mode : DC 5.2V
⑩	■ switch input ($\overline{RECORD\ MUTING}$) DC 5.2V DC 4.8V REC MUTE button kept pressed stop mode : DC 5.2V
⑪	Auto Shut-Off Signal DC 5.2V 0V 0.2sec 2 sec auto shut off becomes in stop mode at tape end in forward mode (may become in 0V according to the position of take-up reel spindle)
⑫	DC 5.2V
⑬	Clock Signal DC 1.6V 1.3Vp-p 8msec
⑭	GND (ground)
⑮	———
⑯	DC 5.2V
⑰	Timer Signal ($\overline{TIMER}$) DC 5.2V 0V 4sec 0.5sec POWER Switch ON (regardless of position of TIMER switch)
⑱	DC 5.2V
⑲	Record-Muting Signal DC 5.2V 0V pause switch OFF REC MUTE switch ON in record mode
⑳	Bias Signal (not used in this set) DC 5.2V 0V record switch ON pause switch OFF pause switch ON
㉑	Line-Muting Signal DC 5.2V -DC 0.4V forward switch ON pause switch ON pause switch OFF record mode made or only record switch ON
㉒	R.P.P. Signal (not used in this set) DC 5V 0V 31.25msec pause switch ON in record mode
㉓	Head-Solenoid Drive Signal DC 4.8V 0V record or forward switch ON pause switch ON pause switch OFF stop mode : DC 0V
㉔	AMS-Solenoid Drive Signal DC 4.8V 0V 0.25sec pause switch OFF record or forward switch ON pause switch ON stop mode : DC 0V
㉕	Reel-Motor Drive Signal in Forward Mode DC 4.8V 0V pause switch ON pause switch OFF record or forward switch ON stop mode : DC 0V fast-forward mode : DC 0.3V
㉖	Reel-Motor Drive Signal in Fast-Forward Mode fast-forward mode: DC 4.8V record and forward modes : DC 0.3V stop and pause modes : DC 0V
㉗	Reel-Motor Drive Signal in Rewind Mode rewind mode : DC 4.8V stop mode : DC 0V
㉘	B+ Supply Voltage DC 5.2V

4-1. MOUNTING DIAGRAM
– Audio Amp Section –

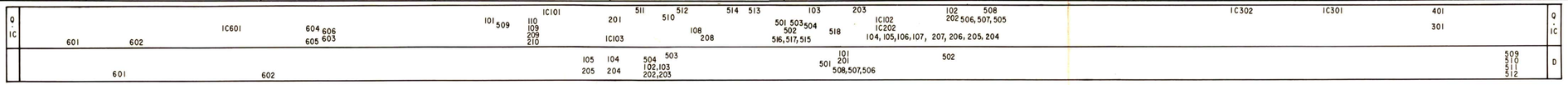

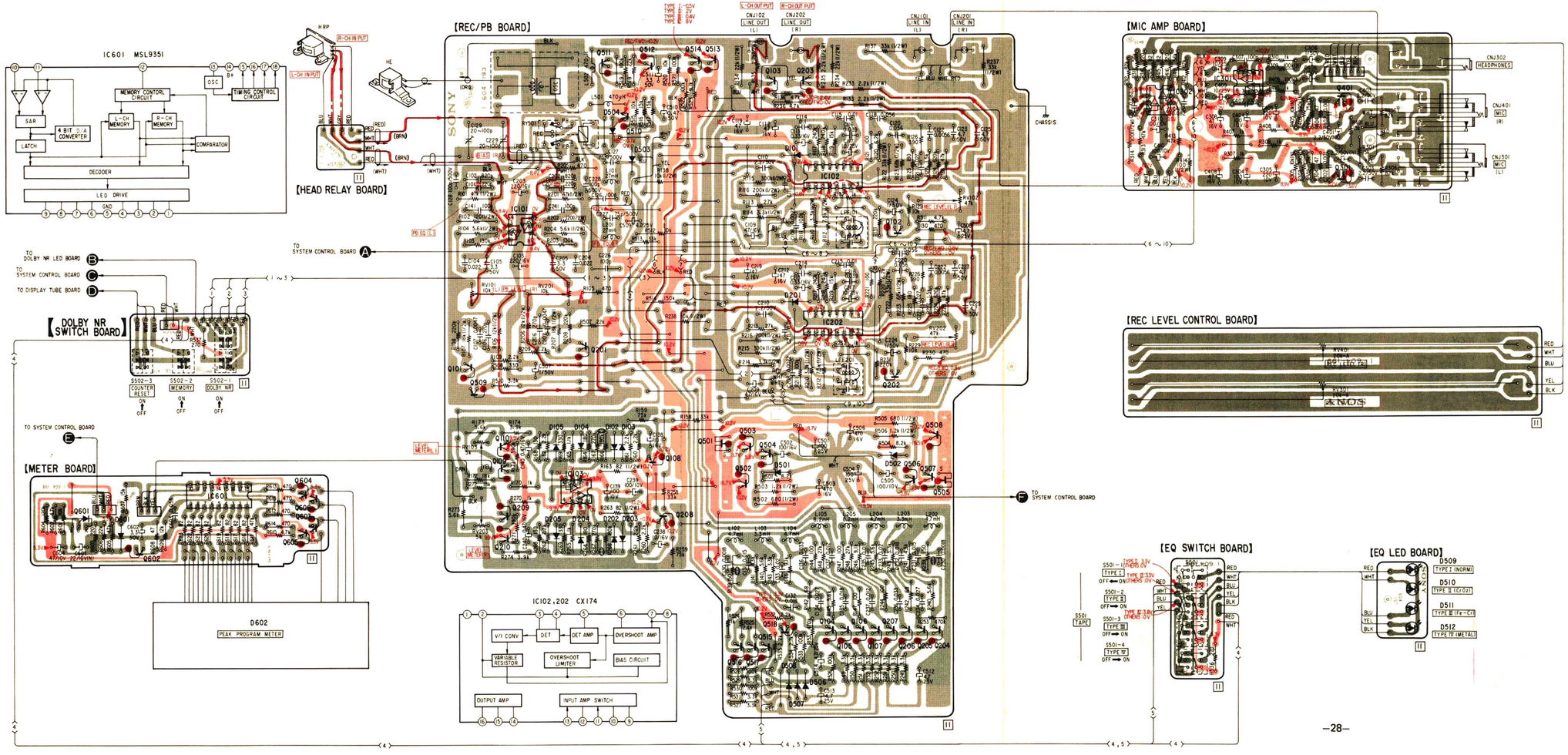

Note:

- Color code of sleeving over the end of the jacket.

- ○— : parts extracted from the component side.
- ●— : parts extracted from the conductor side.
- ■ : part mounted on the conductor side.
- ⊡ : indicates side identified with part number.
- B + pattern
- B – pattern
- : signal path
- : L-CH signal path
- : R-CH signal path

4-2. SCHEMATIC DIAGRAM — Audio Amp Section —

● See page 41 for semiconductor lead layouts.

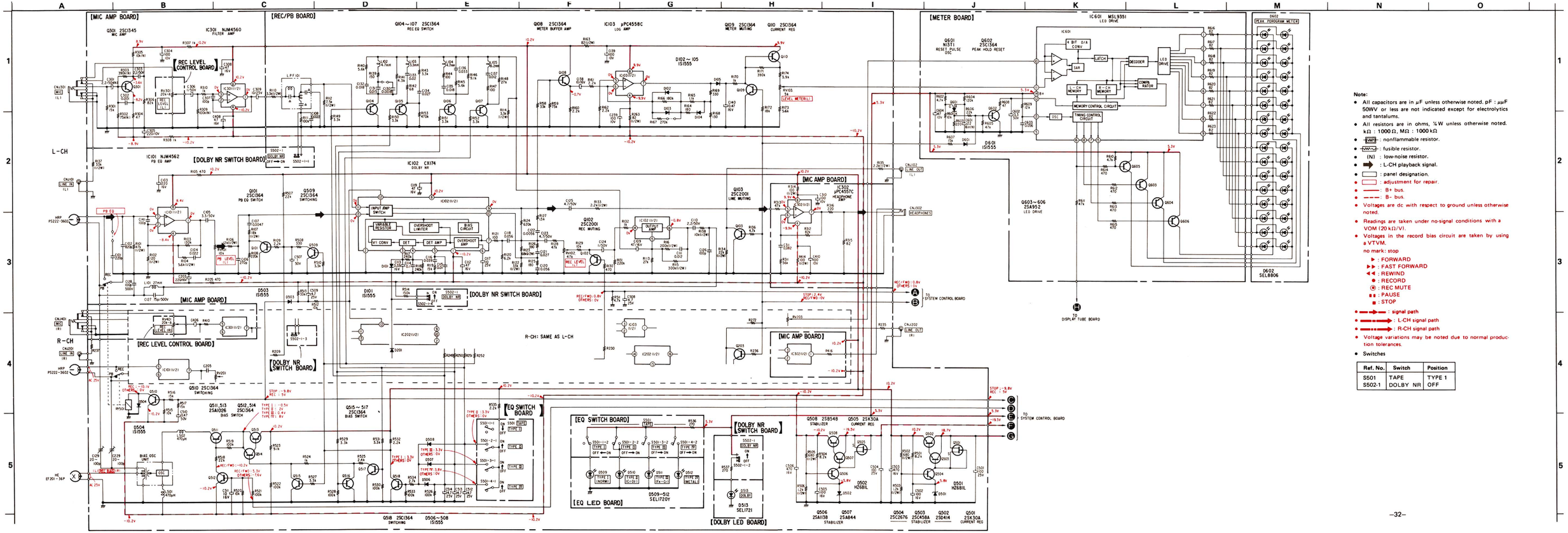

Note:

- All capacitors are in μF unless otherwise noted. pF : μμF
  50WV or less are not indicated except for electrolytics and tantalums.
- All resistors are in ohms, ¼W unless otherwise noted.
  kΩ : 1000Ω, MΩ : 1000kΩ
- : nonflammable resistor.
- : fusible resistor.
- (N) : low-noise resistor.
- : L-CH playback signal.
- : panel designation.
- : adjustment for repair.
- : B+ bus.
- : B− bus.
- Voltages are dc with respect to ground unless otherwise noted.
- Readings are taken under no-signal conditions with a VOM (20kΩ/V).
- Voltages in the record bias circuit are taken by using a VTVM.
  no mark: stop
  ▶ : FORWARD
  ▶▶ : FAST FORWARD
  ◀◀ : REWIND
  ● : RECORD
  (●) : REC MUTE
  ■■ : PAUSE
  ■ : STOP
- : signal path
- : L-CH signal path
- : R-CH signal path
- Voltage variations may be noted due to normal production tolerances.
- Switches

Ref. No.	Switch	Position
S501	TAPE	TYPE 1
S502-1	DOLBY NR	OFF

4-3. MOUNTING DIAGRAM

– System Control Section –

- Refer to page 31 for voltages and waveforms at the terminals of IC801.

Note:

- Color code of sleeving over the end of the jacket.

- ○— : parts extracted from the component side.
- ●— : parts extracted from the conductor side.
- Ⓕ : fusible resistor.
- : B + pattern
- : B + pattern

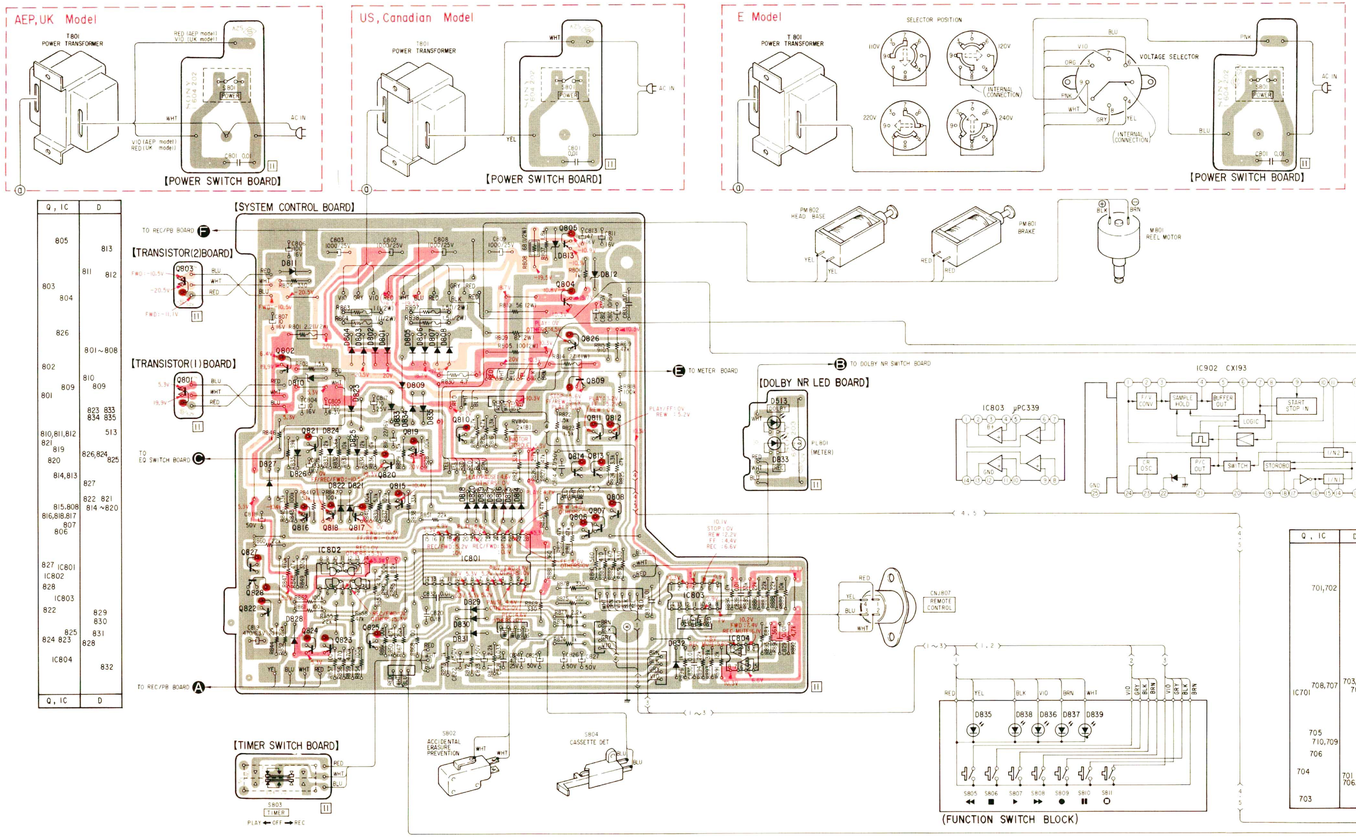

4-4. SCHEMATIC DIAGRAM – System Control Section –

- See page 41 for semiconductor lead layouts.

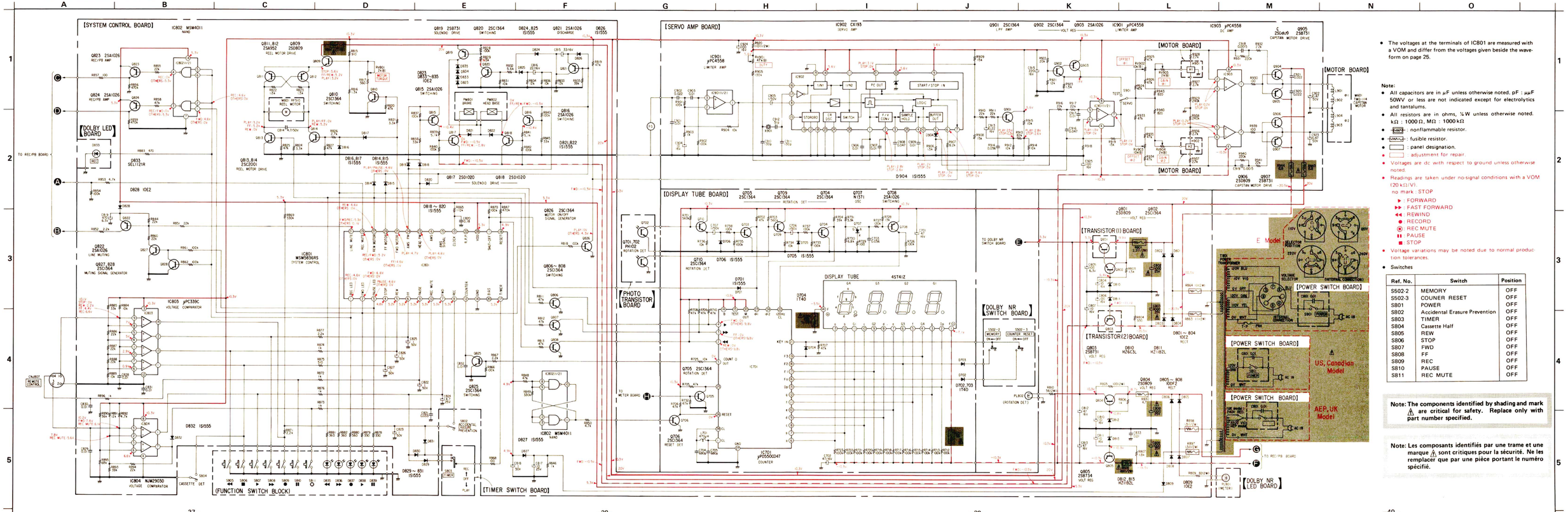

- The voltages at the terminals of IC801 are measured with a VOM and differ from the voltages given beside the waveform on page 25.

Note:

- All capacitors are in μF unless otherwise noted. pF : μμF 50WV or less are not indicated except for electrolytics and tantalums.
- All resistors are in ohms, ¼W unless otherwise noted. kΩ : 1000 Ω, MΩ : 1000 kΩ
- : nonflammable resistor.
- : fusible resistor.
- : panel designation.
- : adjustment for repair.
- Voltages are dc with respect to ground unless otherwise noted.
- Readings are taken under no-signal conditions with a VOM (20 kΩ/V).
  no mark : STOP
  ▶ : FORWARD
  ▶▶ : FAST FORWARD
  ◀◀ : REWIND
  ● : RECORD
  (●) : REC MUTE
  ❚❚ : PAUSE
  ■ : STOP
- Voltage variations may be noted due to normal production tolerances.
- Switches

Ref. No.	Switch	Position
S502-2	MEMORY	OFF
S502-3	COUNER RESET	OFF
S801	POWER	OFF
S802	Accidental Erasure Prevention	OFF
S803	TIMER	OFF
S804	Cassette Half	OFF
S805	REW	OFF
S806	STOP	OFF
S807	FWD	OFF
S808	FF	OFF
S809	REC	OFF
S810	PAUSE	OFF
S811	REC MUTE	OFF

Note: The components identified by shading and mark ⚠ are critical for safety. Replace only with part number specified.

Note: Les composants identifiés par une trame et une marque ⚠ sont critiques pour la sécurité. Ne les remplacer que par une pièce portant le numéro spécifié.

Semiconductor Lead Layouts

2SA844
2SA1027R

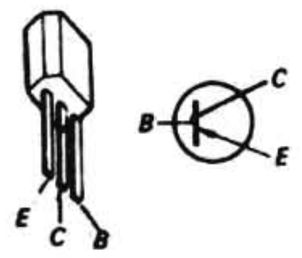

2SA1138

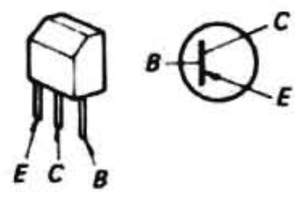

NJM2903D
NJM4562
NJM4562D

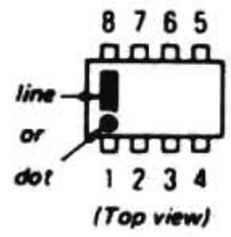

2SA952

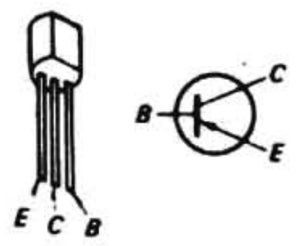

2SD1012

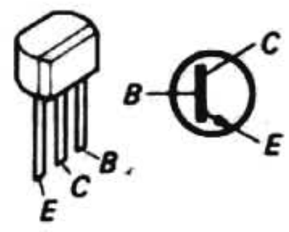

NJM4560D

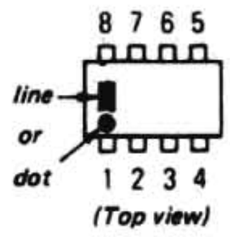

2SB548
2SB731

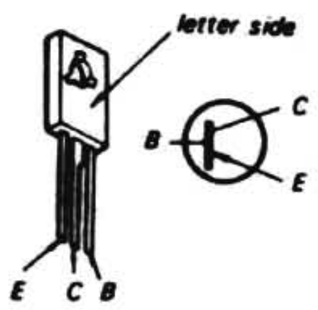

2SC2676

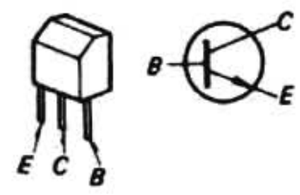

MSM4011
μPC339C

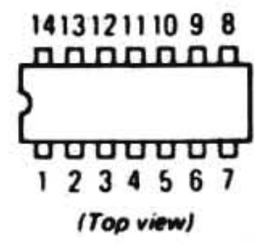

2SB734

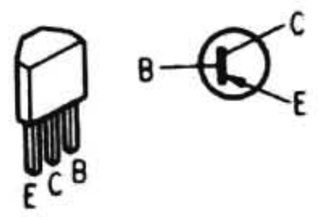

2SK30A

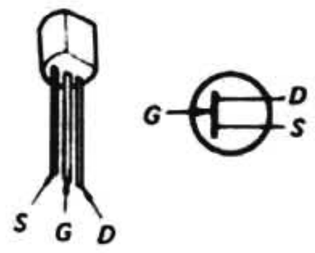

μPC4557C
μPC4558C

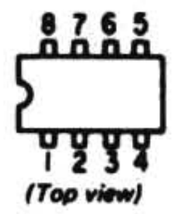

2SC458A
2SC1345
2SD774

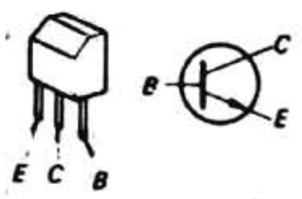

PH102

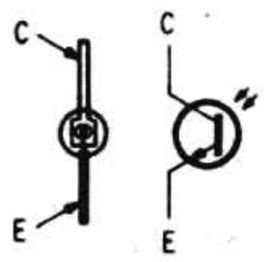

CX193

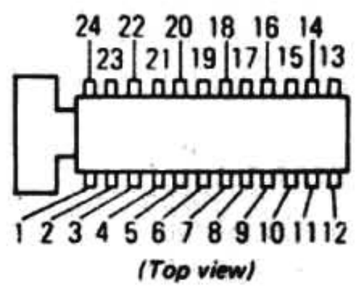

2SC1364

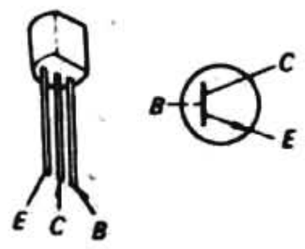

CX174-2
CX174

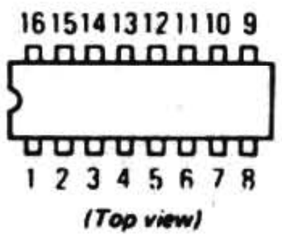

1S1555
1T40
10E2
HZ6B1L
HZ6C3L
HZ11B1L
HZ11B1LTP
HZ11B2L
HZ11C3L
HZ6B1LTP
10DF2

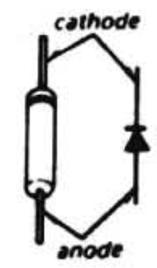

2SC2001

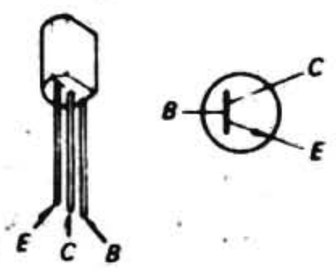

MSL9351

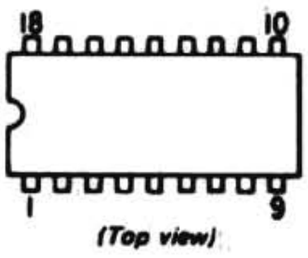

2SD414
2SD809

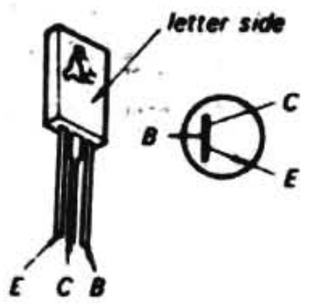

MSM5836RS
μPD550C047

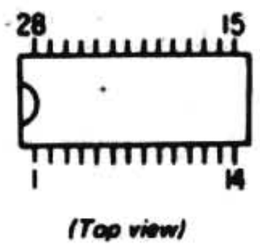

N13T1

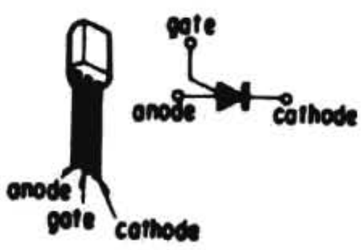

5-1.

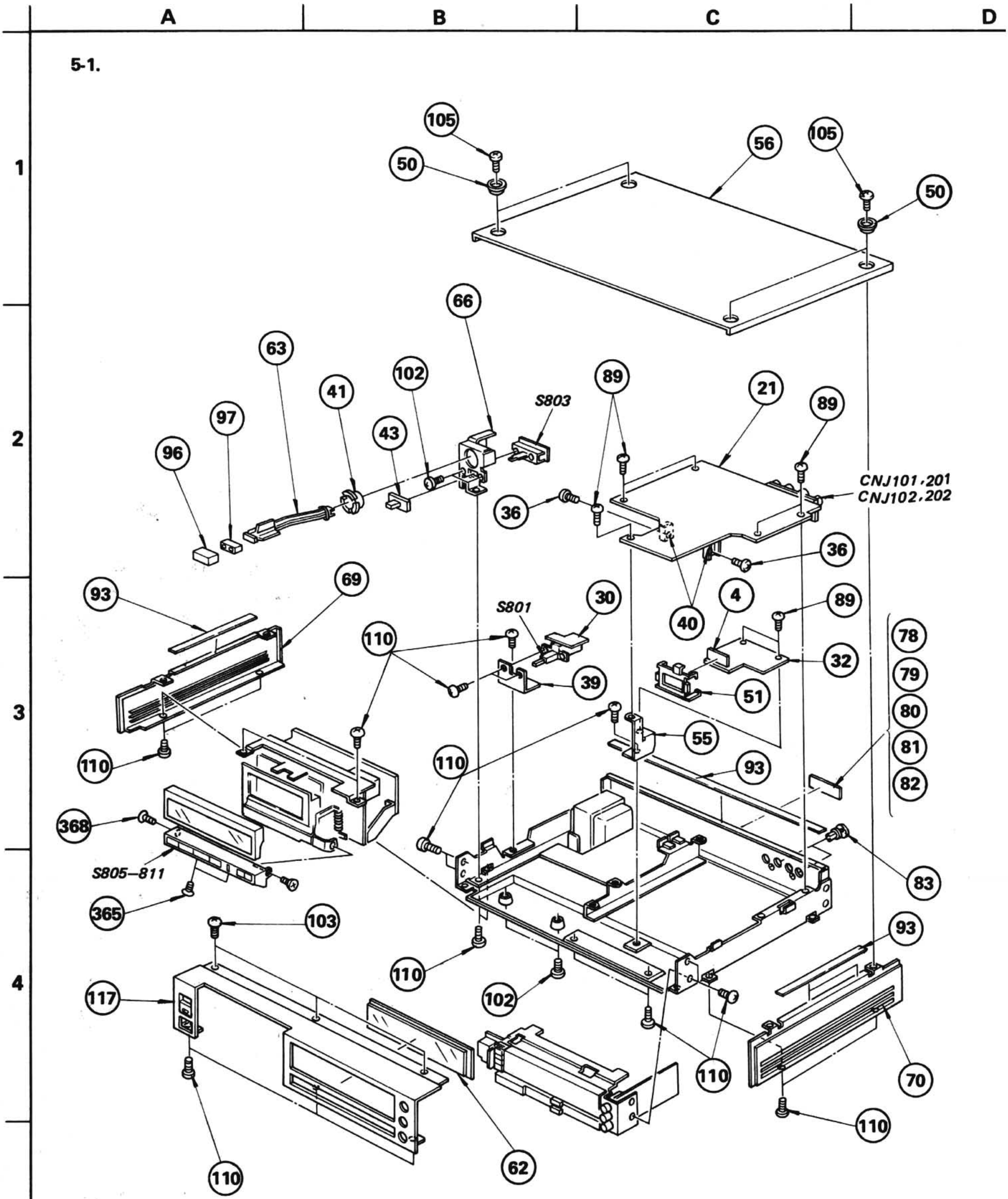
A
B
C
D
1
2
3
4
5
105
50
56
105
50
66
63
102
41
97
96
43
S803
89
21
89
CNJ101,201
CNJ102,202
36
36
69
93
S801
30
4
89
40
110
78
32
79
39
51
80
55
81
110
110
93
82
368
S805–811
83
365
103
93
110
117
102
110
70
110
62
110

5-2.

A
B
C
1
2
3
4
5
72
75
82
87
106
5
6
7
13
14
106
CNJ807
89
40
110
36
28
67
54
68
89
106
110
T801
42
64
73
110
110
74
85
110

5-3.

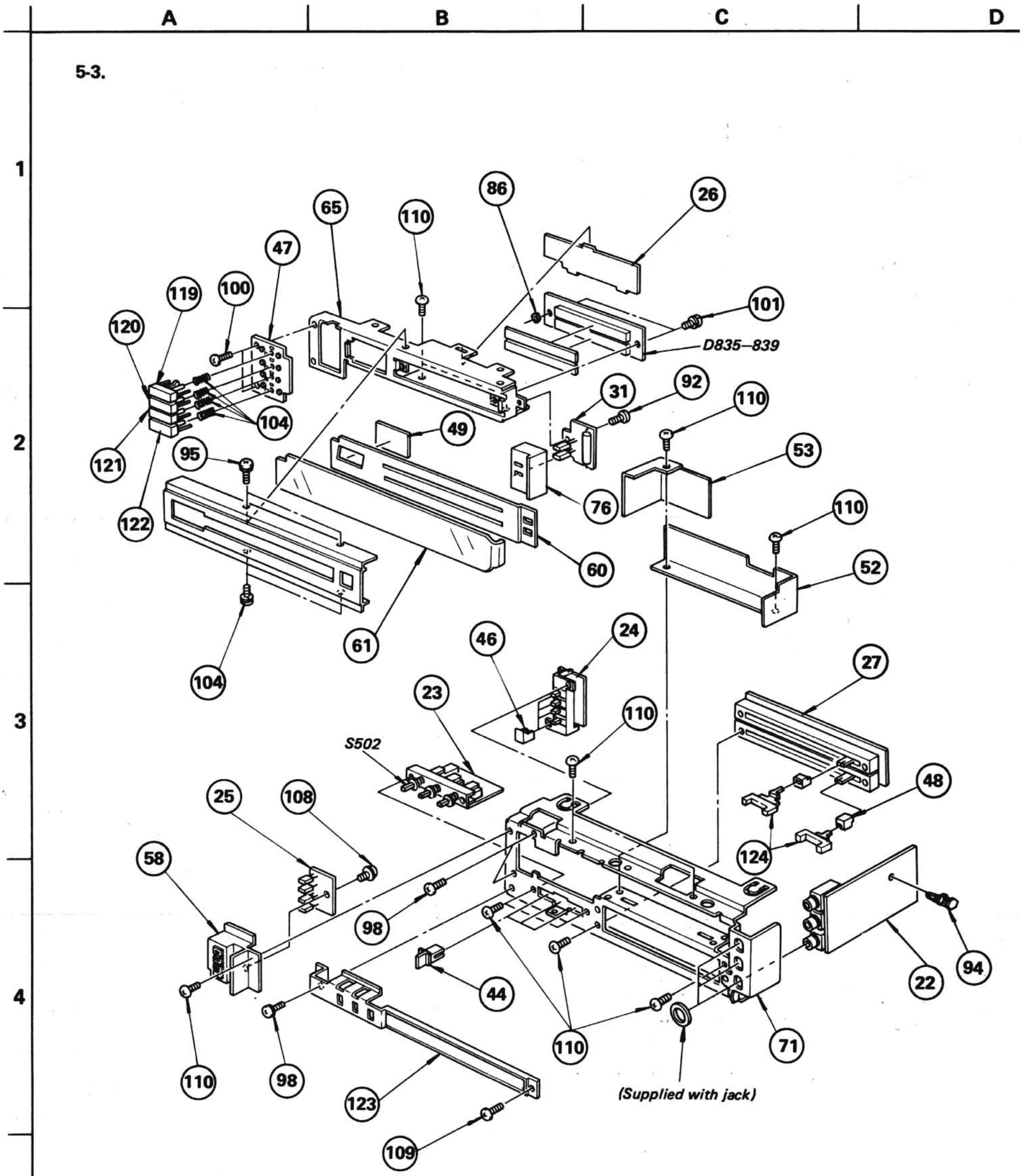
A
B
C
D
1
2
3
4
5
26
86
110
65
47
100
119
120
101
D835–839
104
121
122
95
49
31
92
110
53
76
110
60
52
61
104
46
24
27
23
110
S502
25
108
48
124
58
98
94
22
44
110
71
110
98
123
109
(Supplied with jack)

5-4.

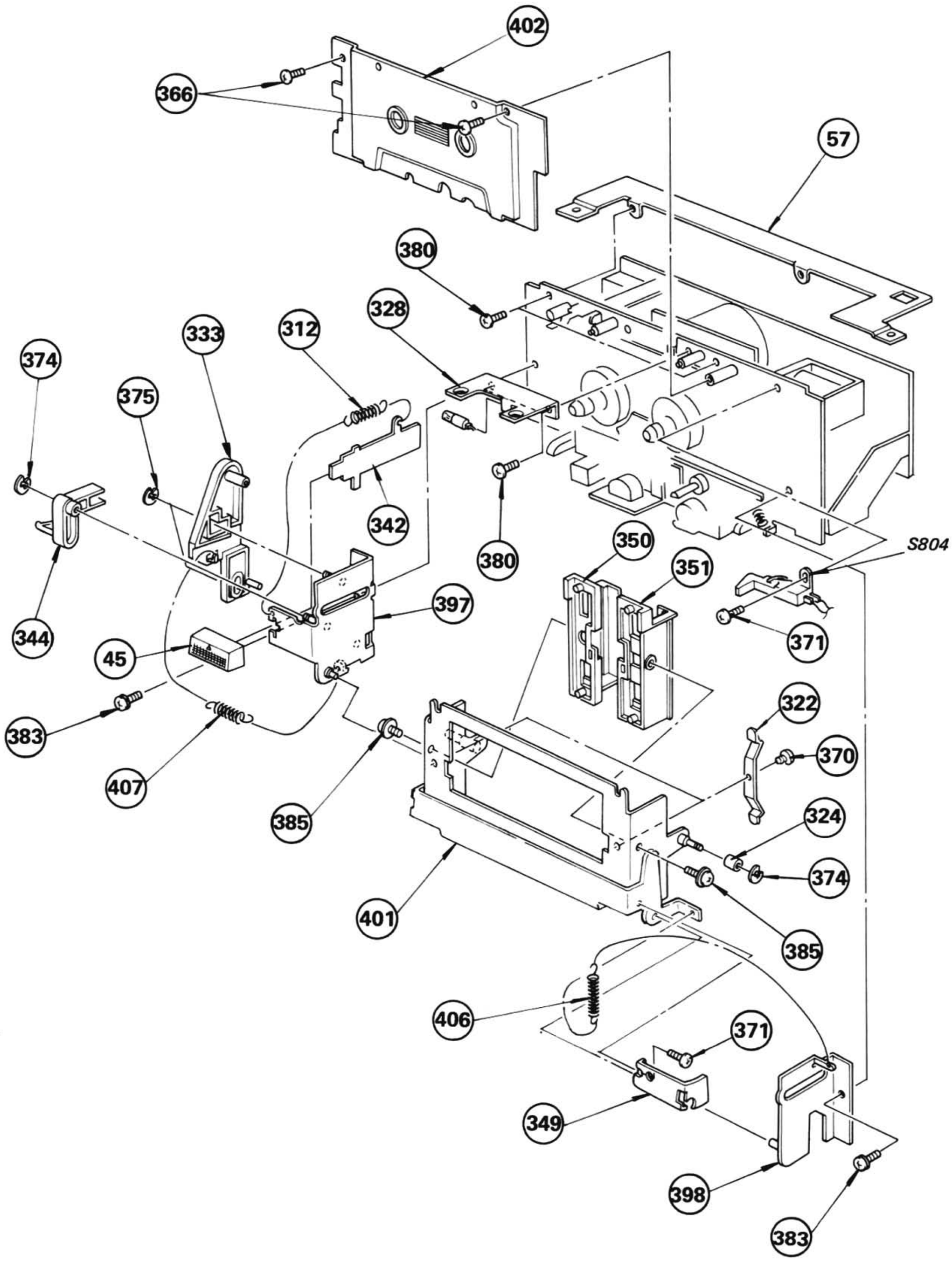
402
366
57
380
328
312
333
374
375
342
380
350
351
S804
397
344
45
371
322
383
370
407
385
324
374
401
385
406
371
349
398
383

5-5.

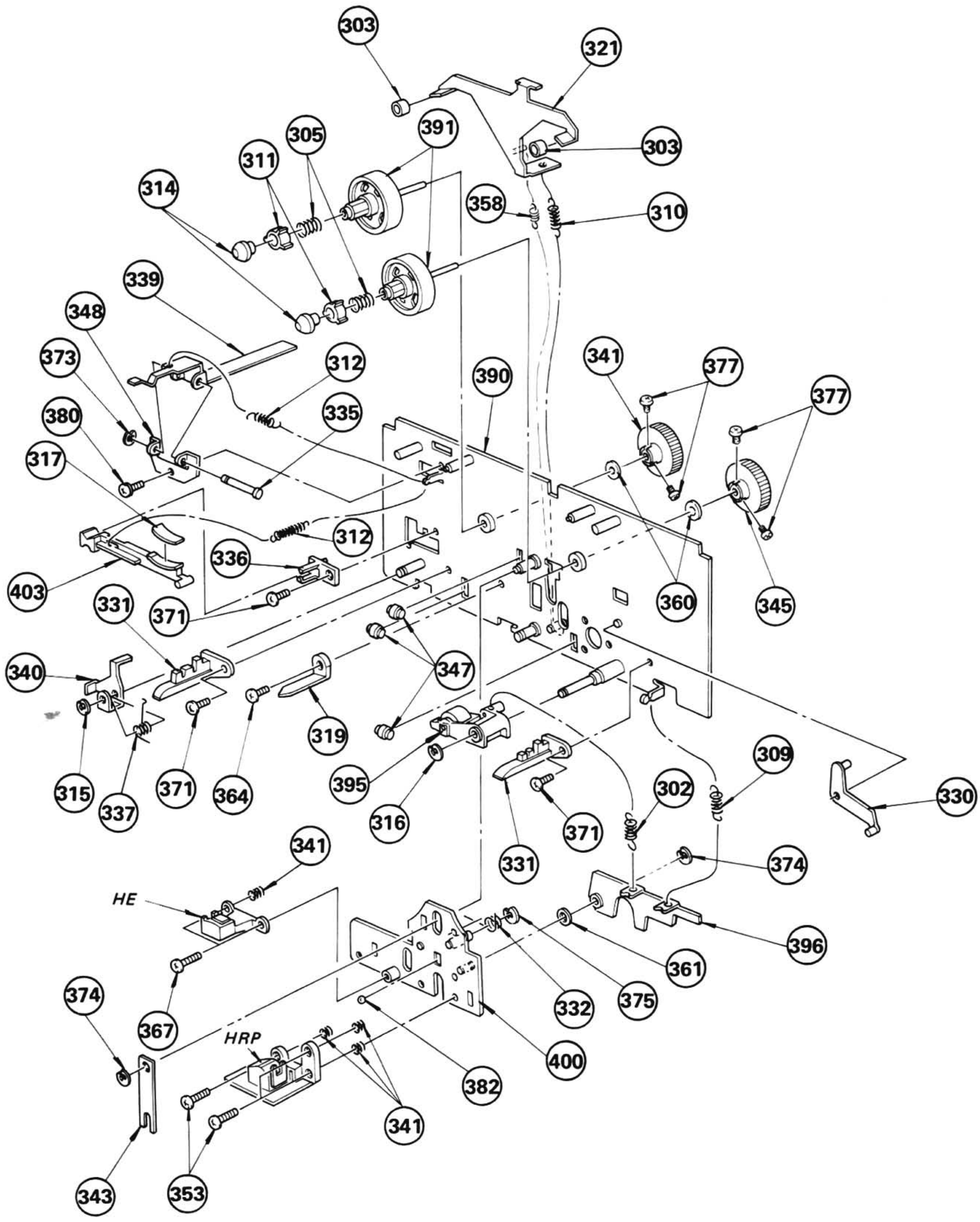
303
321
391
305
311
303
314
358
310
339
348
373
312
390
341
377
377
380
335
317
312
336
403
331
371
360
345
340
347
319
315
337
371
364
395
316
309
302
330
371
331
341
374
HE
396
361
374
367
332
375
HRP
400
382
341
343
353

5-6.

A
B
C
1
2
3
4
5
34
326
383
369
389
327
389
383
378
384
35
334
405
315
387
388
329
386
325
381
399
310
306
352
33
316
320
370
371
381
404
346
383
354
318
315
323
301
338
359
371
318
313
372
393
394
373
307
356
380
392
316
S802

5-7. PARTS LIST

GENERAL SECTION

No.	Part No.	Description
1	1-464-110-00	OSCILLATOR UNIT, BIAS
2	♠;1-508-809-00	BASE POST (14MM) 2P
3	♠;1-508-878-00	BASE POST
4	1-519-221-00	INDICATOR TUBE, FLUORESCENT
5	⚠1-526-576-31	**SELECTOR, POWER VOLTAGE***(E1,E2)**
6	⚠1-534-817-XX	**CORD, POWER***(AEP,UK)**
7	⚠1-534-986-XX	**CORD, POWER***(US,Canadian)**
8	♠;1-535-114-00	TERMINAL
9	♠;1-535-116-00	TERMINAL
10	♠;1-535-117-00	TERMINAL
11	♠;1-535-123-00	TERMINAL
12	♠;1-535-136-00	BASE POST 14MM (10MM PITCH)
13	⚠1-551-473-31	**CORD, POWER***(E1)**
14	⚠1-555-734-00	**CORD, POWER***(E2)**
15	♠;1-560-060-00	PIN, CONNECTOR 2P
16	♠;1-560-061-00	PIN, CONNECTOR 3P
17	♠;1-560-062-00	PIN, CONNECTOR 4P
18	♠;1-560-063-00	PIN, CONNECTOR 5P
19	♠;1-560-064-00	PIN, CONNECTOR 6P
20	♠;1-560-066-00	PIN, CONNECTOR 10P
21	♠;1-604-193-00	PC BOARD, REC/PB
22	♠;1-604-194-00	PC BOARD, MIC AMP
23	♠;1-604-195-00	PC BOARD, DOLBY SW
24	♠;1-604-196-00	PC BOARD, EQ SW
25	♠;1-604-197-00	PC BOARD, EQ LED
26	♠;1-604-198-00	PC BOARD, METER
27	♠;1-604-199-00	PC BOARD, REC LEVEL
28	♠;1-604-200-00	PC BOARD, SYSTEM CONTROL
29	♠;1-604-201-00	PC BOARD, TIMER SW
30	♠;1-604-202-00	PC BOARD, POWER SW
31	♠;1-604-203-00	PC BOARD, DOLBY LED
32	♠;1-604-204-00	PC BOARD, INDICATOR TUBE
33	♠;1-604-205-00	PC BOARD, PHOTO TRANSISTOR
34	♠;1-604-206-00	PC BOARD, SERVO
35	♠;1-604-207-00	PC BOARD, MOTOR
36	2-259-121-00	SCREW, TR
37	3-565-774-00	HEAT SINK, IC
38	3-565-775-00	SPRING
39	♠;3-566-101-00	HOLDER, POWER SWITCH
40	♠;3-567-242-00	HEAT SINK
41	3-567-606-00	GUIDE, POWER SWITCH
42	3-572-365-01	SHEET (A), INSULATING
43	3-575-515-11	KNOB, SLIDE SWITCH
44	3-575-528-11	BUTTON (B), PUSH
45	3-575-533-00	BUTTON, EJECT

GENERAL SECTION

No.	Part No.	Description
46	♠;3-576-293-00	JOINT, T.S KNOB
47	♠;3-576-294-00	GUIDE, KNOB
48	♠;3-576-296-00	JOINT (B), REC KNOB
49	3-576-297-00	WINDOW, COUNTER
50	3-576-298-00	ESCUTCHEON
51	♠;3-576-301-00	HOLDER, INDICATION TUBE
52	♠;3-576-302-00	CASE (A), SHIELD
53	♠;3-576-303-00	CASE (B), SHIELD
54	♠;3-576-304-00	BRACKET (A), PC BOARD
55	♠;3-576-305-00	BRACKET (B), PC BOARD
56	3-576-306-00	PLATE, TOP
57	♠;3-576-307-00	BRACKET, MD
58	3-576-309-00	GUIDE, LED
59	3-576-311-00	PANEL, METER
60	3-576-313-00	PLATE, ORNAMENTAL, METER
61	3-576-314-00	ILLUMINATOR
62	3-576-315-00	COVER, METER
63	3-576-316-00	ROD (B), POWER SWITCH
64	♠;3-576-317-00	PLATE, RELAY
65	♠;3-576-318-00	HOLDER, METER
66	♠;3-576-319-00	CHASSIS, FRONT
67	♠;3-576-320-00	PLATE, SIDE, LEFT
68	♠;3-576-321-00	PLATE, SIDE, RIGHT
69	3-576-325-00	PLATE (LEFT), SIDE, ORNAMENTAL
70	3-576-326-00	PLATE (RIGHT), SIDE,ORNAMENTAL
71	♠;3-576-327-00	CHASSIS, AMPLIFIER
72	3-576-328-00	PLATE, JACK***(AEP,UK)
73	♠;3-576-329-00	PLATE, BOTTOM
74	3-576-332-00	FOOT, F
75	3-576-334-00	PLATE, JACK***(US,Canadian)
76	3-576-337-00	HOLDER, LAMP
77	♠;3-576-344-00	TAPE, REFLECTION
78	3-576-345-00	LABEL, SPECIFICATION***(AEP)
79	3-576-346-00	LABEL, SPECIFICATION***(US,Canadian)
80	3-576-347-00	LABEL, SPECIFICATION***(UK)
81	3-576-348-00	LABEL, SPECIFICATION***(E1,2,)
82	3-576-349-00	PLATE, JACK***(E1,E2)
83	3-646-090-11	RIVET, NYLON
84	3-701-030-00	LABEL, SERIAL NUMBER
85	3-701-191-99	FOOT ASSY, MINI
86	3-701-439-21	WASHER
87	⚠3-701-682-00	**STOPPER, CORD**
88	3-701-748-00	CLAMP
89	3-703-249-01	SCREW, S TIGHT, +PTTWH 3X6
90	♠;3-846-311-00	SPACER (D)

NOTE:
- Items with no part number and no description are not stocked because they are seldom required for routine service.
- Items marked " ♠ " are not stocked since they are seldom required for routine service. Some delay should be anticipated when ordering these items.
- Due to standardization, parts with part numbers (Δ-ΔΔΔ-ΔΔΔ-XX or Δ-ΔΔΔΔ-ΔΔΔ-X) may be different from those used in the set.

CAPACITORS:
- All capacitors are in μF. Common capacitors are omitted. Refer to the following lists for their part numbers. MF:μF, PF:μμF.

RESISTORS
- All resistors are in ohms. Common 1/4W, 1/8W and 1/16W carbon resistors are omitted. Refer to the following lists for their part numbers.
- F : nonflammable

COILS
- MMH : mH, UH : μH

The components identified by shading and mark ⚠ are critical for safety. Replace only with part number specified.

Les composants identifiés par une trame et une marque ⚠ sont critiques pour la sécurité. Ne les remplacer que par une pièce portant le numéro spécifié.

GENERAL SECTION

No.	Part No.	Description
91	4-308-017-00	WASHER
92	4-812-134-00	RIVET, NYLON, 3.5
93	4-848-642-00	CUSHION, VIBRATION
94	4-861-614-11	HOLDER, PC BOARD
95	4-866-707-00	SPRING, COMPRESSION
96	4-871-322-01	CAP, POWER KNOB
97	4-871-323-00	BASE, POWER KNOB
98	7-621-259-25	SCREW +P 2.6X4
99	7-621-770-87	SCREW +P 2.6X5
100	7-621-772-10	SCREW +B 2X4
101	7-621-775-20	SCREW +B 2.6X5
102	7-628-254-05	SCREW +PS 2.6X5
103	7-682-246-13	SCREW +K 3X5
104	7-682-545-09	SCREW +B 3X4
105	7-682-546-04	SCREW +B 3X5
106	7-682-547-09	SCREW +B 3X6
107	7-685-103-24	SCREW +P 2X5 TYPE2 SLIT
108	7-685-132-21	SCREW +P 2.6X5 TYPE2 SLIT
109	7-685-534-29	SCREW +BTP 2.6X8 TYPE2 N-S
110	7-685-870-01	SCREW +BVTT 3X5 (S)
111	7-685-872-01	SCREW +BVTT 3X8 (S)
112	9-911-815-02	CUSHION, METER
113	♦;A-2010-186-A	COMPLETE PCB, RECORD/PLAYBACK
114	A-2020-069-A	COMPLETE PCB, SERVO
115	♦;A-2022-039-A	COMPLETE PCB, MIC AMP
116	A-2095-349-A	COMPLETE PCB, TUBE, INDICATION
117	A-2310-155-A	PANEL ASSY
118	A-2315-016-A	WINDOW (A) ASSY, CASSETTE
119	X-3576-218-0	KNOB ASSY (1), TS (TYPE I)
120	X-3576-219-0	KNOB ASSY (2), TS (TYPE II)
121	X-3576-220-0	KNOB ASSY (3), TS (TYPE III)
122	X-3576-221-0	KNOB ASSY (4), TS (TYPE IV)
123	X-3576-222-0	HOLDER ASSY, GUIDE
124	X-3576-228-0	KNOB ASSY, REC LEVEL
	♦;0-488-794-00	FELT

ACCESSORY & PACKING MATERIAL

No.	Part No.	Description
131	1-551-734-11	CORD, CONNECTION (RK- 74A)
132	3-576-338-00	CUSHION (RIGHT)
133	3-576-339-00	CUSHION (LEFT)
134	3-576-340-00	CUSHION, PANEL
135	3-701-630-00	BAG, POLYETHYLENE
136	3-793-828-11	QUESTIONNAIRE
137	4-809-251-00	BAG, POLYETHYLENE
138	X-3701-105-0	ROD ASSY, CLEANING, HEAD

MECHANISM SECTION

No.	Part No.	Description
301	♦;1-604-208-00	PC BOARD, HEAD EXTENSION
302	♦;3-142-966-00	SPRING, TENSION
303	3-462-060-00	RUBBER, BRAKE
304	3-465-159-XX	SPRING, TENSION
305	3-489-043-00	SPRING, COMPRESSION
306	3-489-073-21	SCREW, THRUST
307	♦;3-509-138-00	CLAMP, SPRING
308	3-530-249-XX	SPRING, TENSION
309	3-530-257-00	SPRING, TENSION
310	3-530-258-00	SPRING, TENSION
311	3-531-760-00	CLAW, REEL SPINDLE
312	3-539-229-00	SPRING, TENSION
313	3-549-058-00	BAND, MOTOR SHIELD
314	3-558-482-00	CAP, REEL
315	3-558-708-11	WASHER, STOPPER
316	3-558-708-21	WASHER, STOPPER
317	3-564-021-00	FELT, REAR TENSION
318	3-564-027-01	FELT, LIMITER
319	3-564-137-00	PIN, CASSETTE GUIDE
320	3-575-360-00	RING, O
321	♦;3-576-208-00	PLATE, BRAKE
322	3-576-209-00	SPRING
323	♦;3-576-210-00	BRACKET (L), MECHANISM
324	3-576-211-01	ROLLER, GUIDE, CASSETTE HOLDER
325	3-576-211-11	ROLLER, GUIDE, CASSETTE HOLDER
326	♦;3-576-216-00	BRACKET (R), MECHANISM
327	♦;3-576-217-00	SPACER, SOLENOID
328	3-576-218-00	RETAINER, CASSETTE
329	3-576-219-00	SCREW, MOTOR SUPPORT
330	3-576-220-00	LEVER (B),RELEASE,PINCH ROLLER
331	3-576-223-00	RETAINER, CASSETTE
332	3-576-225-00	SPRING
333	♦;3-576-233-00	PLATE, LOCK, HOLDER
334	♦;3-576-239-00	ARM, BRAKE RELEASE
335	♦;3-576-240-00	SHAFT, REC DETECTION LEVER
336	3-576-241-00	PLATE, FULCRUM, TENSION LEVER
337	3-576-249-00	SPRING
338	3-576-254-00	PULLEY, R MOTOR
339	3-576-255-00	LEVER, DETECTION, REC
340	♦;3-576-259-00	LEVER, EJECT PREVENTION
341	3-576-261-00	SPRING, COMPRESSION
342	♦;3-576-264-00	SLIDER, EJECT
343	3-576-265-00	SPRING
344	3-576-266-00	ARM, EJECT
345	3-576-271-00	PULLEY, REEL TABLE

NOTE:
- Items with no part number and no description are not stocked because they are seldom required for routine service.
- Items marked " ♦ " are not stocked since they are seldom required for routine service. Some delay should be anticipated when ordering these items.
- Due to standardization, parts with part numbers (Δ-ΔΔΔ-ΔΔΔ-XX or Δ-ΔΔΔΔ-ΔΔΔ-X) may be different from those used in the set.

CAPACITORS:
- All capacitors are in μF. Common capacitors are omitted. Refer to the following lists for their part numbers. MF:μF, PF:μμF.

RESISTORS
- All resistors are in ohms. Common 1/4W, 1/8W and 1/16W carbon resistors are omitted. Refer to the following lists for their part numbers.
- F : nonflammable

COILS
- MMH : mH, UH : μH

The components identified by shading and mark ⚠ are critical for safety. Replace only with part number specified.

Les composants identifiés par une trame et une marque ⚠ sont critiques pour la sécurité. Ne les remplacer que par une pièce portant le numéro spécifié.

MECHANISM SECTION

No.	Part No.	Description
346	♠;3-576-273-00	CYLINDER, AIR
347	3-576-274-00	ROLLER, HEAD CHASSIS
348	♠;3-576-275-00	PLATE, FULCRUM,DETECTION LEVER
349	♠;3-576-277-00	SUPPORT, ARM, FULCRUM
350	3-576-281-00	GUIDE (L), CASSETTE
351	3-576-282-00	GUIDE (R), CASSETTE
352	♠;3-576-283-00	PISTON
353	3-576-335-00	SCREW, BIND
354	3-576-336-00	SPRING, COMPRESSION
355	3-576-343-00	RUBBER, BRAKE
356	3-576-350-00	SPRING, COMPRESSION
357	3-630-615-XX	SPRING, TENSION
358	♠;3-642-753-00	SPRING, TENSION
─ 359	3-646-469-00	SPRING
360	3-701-437-21	WASHER
361	3-701-439-01	WASHER
362	3-701-748-00	CLAMP
363	3-701-822-00	HOLDER, WIRE
364	7-621-259-25	SCREW +P 2.6X4
365	7-621-559-22	SCREW +K 2.6X4
366	7-621-772-10	SCREW +B 2X4
367	7-621-772-40	SCREW +B 2X8
368	7-621-773-86	SCREW +B 2.6X4
369	7-621-773-95	SCREW +B 2.6X6
370	7-621-775-00	SCREW +B 2.6X3
371	7-621-775-10	SCREW +B 2.6X4
372	7-621-775-60	SCREW +B 2.6X12
373	7-624-102-04	STOP RING 1.5, TYPE -E
374	7-624-104-04	STOP RING 2.0, TYPE -E
375	7-624-106-04	STOP RING 3.0, TYPE -E
376	7-624-190-21	STOP RING 6, TYPE-CS
377	7-627-553-47	SCREW,PRECISION +P 2X4
378	7-628-253-15	SCREW +PS 2X5
379	7-628-253-95	SCREW +PS 2.6X4
380	7-628-254-05	SCREW +PS 2.6X5
381	7-628-254-45	SCREW +PS 2.6X12
382	7-671-112-01	BALL, STEEL
383	7-682-647-01	SCREW +PS 3X6
384	7-682-648-01	SCREW +PS 3X8
385	7-687-231-21	PTPWH 2.6X4 TYPE 2 SLIT
386	A-2019-131-A	BEARING ASSY, CAPSTAN
387	A-2133-082-A	ROTOR (A) ASSY
388	A-2149-019-A	RETAINER ASSY, THRUST
389	X-3575-315-0	SOLENOID ASSY
390	♠;X-3576-201-0	CHASSIS ASSY, MECHANISM

MECHANISM SECTION

No.	Part No.	Description
391	X-3576-202-0	TABLE ASSY, REEL
392	♠;X-3576-206-0	BRACKET ASSY, IDLER
─ 393	X-3576-208-0	IDLER ASSY
394	♠;X-3576-209-0	ARM ASSY, IDLER
395	X-3576-210-0	PINCH LEVER ASSY
396	♠;X-3576-211-0	LEVER (A) ASSY, RELEASE
397	♠;X-3576-213-0	PLATE (L) ASSY, SIDE, HOLDER
398	♠;X-3576-214-0	PLATE (R) ASSY, SIDE, HOLDER
399	♠;X-3576-215-0	ARM ASSY, HEAD CHASSIS
400	X-3576-216-0	CHASSIS ASSY, HEAD
401	X-3576-217-0	HOLDER ASSY, CASSETTE
402	X-3576-225-0	PLATE ASSY,ORNAMENTAL,CASSETTE
403	X-3576-226-0	LEVER ASSY, BACK TENSION
404	X-3576-227-0	REEL MOTOR ASSY, INCLUDING(318),(338),(354)
405	3-491-239-00	SPRING
406	3-642-508-00	SPRING
407	3-646-206-00	SPRING

NOTE:
- Items with no part number and no description are not stocked because they are seldom required for routine service.
- Items marked " ♠ " are not stocked since they are seldom required for routine service. Some delay should be anticipated when ordering these items.
- Due to standardization, parts with part numbers (Δ-ΔΔΔ-ΔΔΔ-XX or Δ-ΔΔΔΔ-ΔΔΔ-X) may be different from those used in the set.

CAPACITORS:
- All capacitors are in μF. Common capacitors are omitted. Refer to the following lists for their part numbers. MF:μF, PF:μμF.

RESISTORS
- All resistors are in ohms. Common 1/4W, 1/8W and 1/16W carbon resistors are omitted. Refer to the following lists for their part numbers.
- F : nonflammable

COILS
- MMH : mH, UH : μH

The components identified by shading and mark ⚠ are critical for safety. Replace only with part number specified.

Les composants identifiés par une trame et une marque ⚠ sont critiques pour la sécurité. Ne les remplacer que par une pièce portant le numéro spécifié.

ELECTRICAL PARTS

Ref.No.	Paer No.	Description			
C104	1-130-305-00	FILM	0.022MF	5%	100V
C107	1-130-289-00	FILM	0.0047MF	5%	100V
C111	1-130-621-00	FILM	0.012MF	5%	50V
C114	1-130-632-00	FILM	0.1MF	5%	50V
C115	1-130-620-00	FILM	0.01MF	5%	50V
C116	1-130-627-00	FILM	0.039MF	5%	50V
C118	1-130-629-00	FILM	0.056MF	5%	50V
C120	1-130-629-00	FILM	0.056MF	5%	50V
C121	1-130-625-00	FILM	0.027MF	5%	50V
C125	1-123-232-00	ELECT	4.7MF	20%	50V
C127	1-107-167-00	MICA	75PF	5%	500V
C129	1-141-225-00	CAP, TRIMMER			
C134	1-130-625-00	FILM	0.027MF	5%	50V
C135	1-130-623-00	FILM	0.018MF	5%	50V
C136	1-130-626-00	FILM	0.033MF	5%	50V
C138	1-123-356-00	ELECT	10MF	20%	16V
C139	1-123-307-00	ELECT	100MF	20%	10V
C204	1-130-305-00	FILM	0.022MF	5%	100V
C207	1-130-289-00	FILM	0.0047MF	5%	100V
C211	1-130-621-00	FILM	0.012MF	5%	50V
C214	1-130-632-00	FILM	0.1MF	5%	50V
C215	1-130-620-00	FILM	0.01MF	5%	50V
C216	1-130-627-00	FILM	0.039MF	5%	50V
C218	1-130-629-00	FILM	0.056MF	5%	50V
C220	1-130-629-00	FILM	0.056MF	5%	50V
C221	1-130-625-00	FILM	0.027MF	5%	50V
C227	1-107-167-00	MICA	75PF	5%	500V
C229	1-141-225-00	CAP, TUNING,	TRIMAR		
C234	1-130-625-00	FILM	0.027MF	5%	50V
C235	1-130-623-00	FILM	0.018MF	5%	50V
C236	1-130-626-00	FILM	0.033MF	5%	50V
C509	1-123-329-00	ELECT	10MF	20%	25V
C511	1-123-329-00	ELECT	10MF	20%	25V
C602	1-123-382-00	ELECT	3.3MF	20%	50V
C603	1-130-629-00	FILM	0.056MF	5%	50V
C701	1-123-332-00	ELECT	47MF	20%	16V
C702	1-123-332-00	ELECT	47MF	20%	16V
C703	1-130-629-00	FILM	0.056MF	5%	50V
C801 ⚠	1-161-744-00	CERAMIC	0.01MF		400V
C804	1-123-316-00	ELECT	10MF	20%	16V
C806	1-123-333-00	ELECT	100MF	20%	16V
C807	1-123-356-00	ELECT	10MF	20%	16V
C808 ⚠	1-123-697-00	ELECT	1000MF	20%	25V
C809 ⚠	1-123-697-00	ELECT	1000MF	20%	25V
C810	1-123-356-00	ELECT	10MF	20%	16V
C811	1-123-356-00	ELECT	10MF	20%	16V
C812	1-123-332-00	ELECT	47MF	20%	16V
C813	1-123-332-00	ELECT	47MF	20%	16V
C817	1-123-329-00	ELECT	10MF	20%	25V
C819	1-123-298-00	ELECT	470MF	20%	6.3V

ELECTRICAL PARTS

Ref.No.	Part No.	Description			
C821	1-130-626-00	FILM	0.033MF	5%	50V
C902	1-130-624-00	FILM	0.022MF	5%	50V
C903	1-130-620-00	FILM	0.01MF	5%	50V
C904	1-123-356-00	ELECT	10MF	20%	16V
C906	1-130-188-00	FILM	0.01MF	5%	100V
C908	1-130-628-00	FILM	0.047MF	5%	50V
C909	1-130-620-00	FILM	0.01MF	5%	50V
C910	1-102-905-00	CERAMIC	130PF	5%	50V
C911	1-102-905-00	CERAMIC	130PF	5%	50V
C912	1-102-522-00	CERAMIC	51PF	5%	50V
C914	1-130-629-00	FILM	0.056MF	5%	50V
C916	1-130-628-00	FILM	0.047MF	5%	50V
C917	1-130-620-00	FILM	0.01MF	5%	50V
CNJ101	1-507-531-00	PIN-JACK (LINE IN/L)			
CNJ102	1-507-531-00	PIN-JACK (LINE OUT/L)			
CNJ201	1-507-531-00	PIN-JACK (LINE IN/R)			
CNJ202	1-507-531-00	PIN-JACK (LINE OUT/R)			
CNJ301	1-507-648-00	JACK (MIC/L)			
CNJ302	1-507-649-00	JACK (HEADPHONES)			
CNJ401	1-507-648-00	JACK (MIC/R)			
CNJ807	1-561-598-00	SOCKET 4P (REMOTE CONTROL)			
D101	8-719-815-55	DIODE 1S1555			
D102	8-719-815-55	DIODE 1S1555			
D103	8-719-815-55	DIODE 1S1555			
D104	8-719-815-55	DIODE 1S1555			
D105	8-719-815-55	DIODE 1S1555			
D201	8-719-815-55	DIODE 1S1555			
D202	8-719-815-55	DIODE 1S1555			
D203	8-719-815-55	DIODE 1S1555			
D204	8-719-815-55	DIODE 1S1555			
D205	8-719-815-55	DIODE 1S1555			
D501	8-719-990-64	DIODE HZ6B1L			
D502	8-719-990-64	DIODE HZ6B1L			
D503	8-719-815-55	DIODE 1S1555			
D504	8-719-815-55	DIODE 1S1555			
D505	8-719-815-55	DIODE 1S1555			
D506	8-719-815-55	DIODE 1S1555			
D507	8-719-815-55	DIODE 1S1555			
D508	8-719-815-55	DIODE 1S1555			
D509	8-719-317-21	DIODE SEL1721Y			
D510	8-719-317-21	DIODE SEL1721Y			
D511	8-719-317-21	DIODE SEL1721Y			
D512	8-719-317-21	DIODE SEL1721Y			
D513	8-719-317-21	DIODE SEL1721Y			
D601	8-719-815-55	DIODE 1S1555			
D701	8-719-815-55	DIODE 1S1555			
D702	8-719-815-55	DIODE 1S1555			
D703	8-719-815-55	DIODE 1S1555			
D704	8-719-815-55	DIODE 1S1555			
D705	8-719-815-55	DIODE 1S1555			
D706	8-719-815-55	DIODE 1S1555			

NOTE:
- Items with no part number and no description are not stocked because they are seldom required for routine service.
- Items marked " ♠ " are not stocked since they are seldom required for routine service. Some delay should be anticipated when ordering these items.
- Due to standardization, parts with part numbers (Δ-ΔΔΔ-ΔΔΔ-XX or Δ-ΔΔΔΔ-ΔΔΔ-X) may be different from those used in the set.

CAPACITORS:
- All capacitors are in μF. Common capacitors are omitted. Refer to the following lists for their part numbers. MF:μF, PF:μμF.

RESISTORS
- All resistors are in ohms. Common 1/4W, 1/8W and 1/16W carbon resistors are omitted. Refer to the following lists for their part numbers.
- F : nonflammable

COILS
- MMH : mH, UH : μH

The components identified by shading and mark ⚠ are critical for safety. Replace only with part number specified.

Les composants identifiés par une trame et une marque ⚠ sont critiques pour la sécurité. Ne les remplacer que par une pièce portant le numéro spécifié.

ELECTRICAL PARTS

Ref.No.	Part No.	Description
D801	8-719-200-02	DIODE 10E-2
D802	8-719-200-02	DIODE 10E-2
D803	8-719-200-02	DIODE 10E-2
D804	8-719-200-02	DIODE 10E-2
D805	8-719-210-12	DIODE 10DF2
D806	8-719-210-12	DIODE 10DF2
D807	8-719-210-12	DIODE 10DF2
D808	8-719-210-12	DIODE 10DF2
D809	8-719-200-02	DIODE 10E-2
D810	8-719-990-69	DIODE HZ6C3L
D811	8-719-970-15	DIODE HZ11B2L
D812	8-719-970-15	DIODE HZ11B2L
D813	8-719-970-15	DIODE HZ11B2L
D814	8-719-815-55	DIODE 1S1555
D815	8-719-815-55	DIODE 1S1555
D816	8-719-815-55	DIODE 1S1555
D817	8-719-815-55	DIODE 1S1555
D818	8-719-815-55	DIODE 1S1555
D819	8-719-815-55	DIODE 1S1555
D820	8-719-815-55	DIODE 1S1555
D821	8-719-815-55	DIODE 1S1555
D822	8-719-815-55	DIODE 1S1555
D823	8-719-200-02	DIODE 10E-2
D824	8-719-815-55	DIODE 1S1555
D825	8-719-815-55	DIODE 1S1555
D826	8-719-815-55	DIODE 1S1555
D827	8-719-815-55	DIODE 1S1555
D828	8-719-200-02	DIODE 10E-2
D829	8-719-815-55	DIODE 1S1555
D830	8-719-815-55	DIODE 1S1555
D831	8-719-815-55	DIODE 1S1555
D832	8-719-815-55	DIODE 1S1555
D833	8-719-200-02	DIODE 10E-2
D833	8-719-311-21	DIODE SEL1121R
D834	8-719-200-02	DIODE 10E-2
D835	8-719-200-02	DIODE 10E-2
D904	8-719-815-55	DIODE 1S1555
H901	8-719-814-11	DIODE THS102
H902	8-719-814-11	DIODE THS102
HE	8-825-528-30	HEAD, ERASE (EF201-36P)
HRP	8-825-503-20	HEAD, REC/PB (PS222-3602)
IC101	8-759-705-62	IC NJM462D-M
IC102	8-759-100-74	IC CX174-2
IC103	8-759-145-58	IC UPC4558C
IC202	8-759-100-74	IC CX174
IC301	8-759-745-60	IC NJM4560D

ELECTRICAL PARTS

Ref.No.	Part No.	Description
IC302	8-759-145-57	IC UPC4557C
IC601	8-759-993-51	IC MSL9351
IC701	8-759-150-47	IC UPD550C047
IC801	8-759-998-36	IC MSM5836
IC802	8-759-940-11	IC MSM4011
IC803	8-759-133-90	IC UPC339C
IC804	8-759-729-03	IC NJM2903D
IC901	8-759-145-58	IC UPC4558C
IC902	8-751-930-00	IC CX193
IC903	8-759-700-58	IC NJM4558DFA
L101	1-408-262-00	MICRO INDUCTOR 27MMH
L102	1-408-253-00	MICRO INDUCTOR 4.7MMH
L103	1-408-251-00	MICRO INDUCTOR 3.3MMH
L104	1-408-253-00	MICRO INDUCTOR 4.7MMH
L105	1-408-256-00	MICRO INDUCTOR 8.2MMH
L201	1-408-262-00	MICRO INDUCTOR 27MMH
L202	1-408-253-00	MICRO INDUCTOR 4.7MMH
L203	1-408-251-00	MICRO INDUCTOR 3.3MMH
L204	1-408-253-00	MICRO INDUCTOR 4.7MMH
L205	1-408-256-00	MICRO INDUCTOR 8.2MMH
L501	1-408-096-00	MICRO INDUCTOR 470UH
L502	1-408-096-00	MICRO INDUCTOR 470UH
L701	1-408-096-00	MICRO INDUCTOR 470UH
L901	♠;1-462-176-00	COIL, MOTOR (STATOR)
L902	♠;1-462-176-00	COIL, MOTOR (STATOR)
L903	♠;1-462-176-00	COIL, MOTOR (STATOR)
L904	♠;1-462-176-00	COIL, MOTOR (STATOR)
LPF101	1-231-388-00	FILTER, LOWPASS
LPF201	1-231-388-00	FILTER, LOWPASS
PL801	1-518-351-00	LAMP, PILOT
Q101	8-729-663-47	TRANSISTOR 2SC1364
Q102	8-729-100-13	TRANSISTOR 2SC2001
Q103	8-729-100-13	TRANSISTOR 2SC2001
Q104	8-729-663-47	TRANSISTOR 2SC1364
Q105	8-729-663-47	TRANSISTOR 2SC1364
Q106	8-729-663-47	TRANSISTOR 2SC1364
Q107	8-729-663-47	TRANSISTOR 2SC1364
Q108	8-729-663-47	TRANSISTOR 2SC1364
Q109	8-729-663-47	TRANSISTOR 2SC1364
Q110	8-729-663-47	TRANSISTOR 2SC1364
Q201	8-729-663-47	TRANSISTOR 2SC1364
Q202	8-729-100-13	TRANSISTOR 2SC2001
Q203	8-729-100-13	TRANSISTOR 2SC2001
Q204	8-729-663-47	TRANSISTOR 2SC1364
Q205	8-729-663-47	TRANSISTOR 2SC1364
Q206	8-729-663-47	TRANSISTOR 2SC1364
Q207	8-729-663-47	TRANSISTOR 2SC1364
Q208	8-729-663-47	TRANSISTOR 2SC1364
Q209	8-729-663-47	TRANSISTOR 2SC1364
Q210	8-729-663-47	TRANSISTOR 2SC1364

NOTE:
- Items with no part number and no description are not stocked because they are seldom required for routine service.
- Items marked " ♠ " are not stocked since they are seldom required for routine service. Some delay should be anticipated when ordering these items.
- Due to standardization, parts with part numbers (Δ-ΔΔΔ-ΔΔΔ-XX or Δ-ΔΔΔΔ-ΔΔΔ-X) may be different from those used in the set.

CAPACITORS:
- All capacitors are in μF. Common capacitors are omitted. Refer to the following lists for their part numbers. MF:μF, PF:μμF.

RESISTORS
- All resistors are in ohms. Common 1/4W, 1/8W and 1/16W carbon resistors are omitted. Refer to the following lists for their part numbers.
- F : nonflammable

COILS
- MMH : mH, UH : μH

The components identified by shading and mark ⚠ are critical for safety. Replace only with part number specified.

Les composants identifiés par une trame et une marque ⚠ sont critiques pour la sécurité. Ne les remplacer que par une pièce portant le numéro spécifié.

ELECTRICAL PARTS

Ref.No.	Part No.	Description
Q301	8-729-334-58	TRANSISTOR 2SC1345
Q401	8-729-334-58	TRANSISTOR 2SC1345
Q501	8-729-203-02	TRANSISTOR 2SK30A
Q502	8-729-141-43	TRANSISTOR 2SD414
Q503	8-729-315-22	TRANSISTOR 2SD1152
Q504	8-729-167-62	TRANSISTOR 2SC2676
Q505	8-729-203-02	TRANSISTOR 2SK30A
Q506	8-729-113-82	TRANSISTOR 2SA1138
Q507	8-729-306-42	TRANSISTOR 2SB864
Q508	8-729-154-83	TRANSISTOR 2SB548
Q509	8-729-663-47	TRANSISTOR 2SC1364
Q510	8-729-663-47	TRANSISTOR 2SC1364
Q511	8-729-612-77	TRANSISTOR 2SA1027R
Q512	8-729-663-47	TRANSISTOR 2SC1364
Q513	8-729-612-77	TRANSISTOR 2SA1027R
Q514	8-729-663-47	TRANSISTOR 2SC1364
Q515	8-729-663-47	TRANSISTOR 2SC1364
Q516	8-729-663-47	TRANSISTOR 2SC1364
Q517	8-729-663-47	TRANSISTOR 2SC1364
Q518	8-729-663-47	TRANSISTOR 2SC1364
Q601	8-729-101-31	TRANSISTOR N13T1
Q602	8-729-663-47	TRANSISTOR 2SC1364
Q603	8-729-195-23	TRANSISTOR 2SA952
Q604	8-729-195-23	TRANSISTOR 2SA952
Q605	8-729-195-23	TRANSISTOR 2SA952
Q606	8-729-195-23	TRANSISTOR 2SA952
Q701	8-729-110-21	TRANSISTOR PH102
Q702	8-729-110-21	TRANSISTOR PH102
Q703	8-729-663-47	TRANSISTOR 2SC1364
Q704	8-729-663-47	TRANSISTOR 2SC1364
Q705	8-729-663-47	TRANSISTOR 2SC1364
Q706	8-729-663-47	TRANSISTOR 2SC1364
Q707	8-729-101-31	TRANSISTOR N13T1
Q708	8-729-612-77	TRANSISTOR 2SA1027R
Q709	8-729-663-47	TRANSISTOR 2SC1364
Q710	8-729-663-47	TRANSISTOR 2SC1364
Q801	8-729-180-93	TRANSISTOR 2SD809
Q802	8-729-663-47	TRANSISTOR 2SC1364
Q803	8-729-173-13	TRANSISTOR 2SB731
Q804	8-729-180-93	TRANSISTOR 2SD809
Q805	8-729-374-02	TRANSISTOR 2SB734
Q806	8-729-663-47	TRANSISTOR 2SC1364
Q807	8-729-663-47	TRANSISTOR 2SC1364
Q808	8-729-663-47	TRANSISTOR 2SC1364
Q809	8-729-180-93	TRANSISTOR 2SD809
Q810	8-729-663-47	TRANSISTOR 2SC1364
Q811	8-729-195-23	TRANSISTOR 2SA952
Q812	8-729-195-23	TRANSISTOR 2SA952
Q813	8-729-100-13	TRANSISTOR 2SC2001
Q814	8-729-100-13	TRANSISTOR 2SC2001

ELECTRICAL PARTS

Ref.No.	Part No.	Description				
Q815	8-729-612-77	TRANSISTOR 2SA1027R				
Q816	8-729-612-77	TRANSISTOR 2SA1027R				
Q817	8-729-102-03	TRANSISTOR 2SD1020				
Q818	8-729-102-03	TRANSISTOR 2SD1020				
Q819	8-729-173-13	TRANSISTOR 2SB731				
Q820	8-729-663-47	TRANSISTOR 2SC1364				
Q821	8-729-612-77	TRANSISTOR 2SA1027R				
Q822	8-729-612-77	TRANSISTOR 2SA1027R				
Q823	8-729-612-77	TRANSISTOR 2SA1027R				
Q824	8-729-612-77	TRANSISTOR 2SA1027R				
Q825	8-729-663-47	TRANSISTOR 2SC1364				
Q826	8-729-663-47	TRANSISTOR 2SC1364				
Q827	8-729-663-47	TRANSISTOR 2SC1364				
Q828	8-729-663-47	TRANSISTOR 2SC1364				
Q901	8-729-663-47	TRANSISTOR 2SC1364				
Q902	8-729-663-47	TRANSISTOR 2SC1364				
Q903	8-729-612-77	TRANSISTOR 2SA1027R				
Q904	8-729-180-93	TRANSISTOR 2SD809				
Q905	8-729-173-13	TRANSISTOR 2SB731				
Q906	8-729-180-93	TRANSISTOR 2SD809				
Q907	8-729-173-13	TRANSISTOR 2SB731				
R133	1-214-872-00	METAL	2.2K	1%	1/2W	
R134	1-214-897-00	METAL	22K	1%	1/2W	
R135	1-214-872-00	METAL	2.2K	1%	1/2W	
R137	1-214-901-00	METAL	33K	1%	1/2W	
R138	1-214-888-00	METAL	10K	1%	1/2W	
R202	1-214-842-00	METAL	120	1%	1/2W	
R233	1-214-872-00	METAL	2.2K	1%	1/2W	
R235	1-214-872-00	METAL	2.2K	1%	1/2W	
R237	1-214-901-00	METAL	33K	1%	1/2W	
R238	1-214-888-00	METAL	10K	1%	1/2W	
R502	1-214-860-00	METAL	680	1%	1/2W	
R503	1-214-866-00	METAL	1.2K	1%	1/2W	
R505	1-214-860-00	METAL	680	1%	1/2W	
R506	1-214-866-00	METAL	1.2K	1%	1/2W	
R522	1-214-777-00	METAL	100K	1%	1/4W	
R523	1-214-752-00	METAL	9.1K	1%	1/4W	
R524	1-214-727-00	METAL	820	1%	1/4W	
R525	1-214-738-00	METAL	2.4K	1%	1/4W	
R711 ⚠	1-247-101-00	CARBON	56	5%	1/4W	F
R724 ⚠	1-247-216-00	CARBON	100	5%	1/2W	F
R801 ⚠	1-212-942-00	FUSIBLE	2.2	5%	1/2W	F
R805	1-206-640-00	METAL	100	5%	2W	F
R808 ⚠	1-217-395-00	FUSIBLE	47	5%	1/4W	F
R809	1-206-485-00	METAL	82	5%	2W	F
R810	1-206-481-00	METAL	56	5%	2W	F
R814 ⚠	1-213-070-00	FUSIBLE	27	5%	1W	F
R830	1-212-849-00	FUSIBLE	4.7	5%	1/4W	F
R863	1-217-422-00	FUSIBLE	1	5%	1/2W	F
R864	1-217-422-00	FUSIBLE	1	5%	1/2W	F
R897	1-212-938-00	FUSIBLE	1.5	5%	1/2W	F

NOTE:
- Items with no part number and no description are not stocked because they are seldom required for routine service.
- Items marked " ♦ " are not stocked since they are seldom required for routine service. Some delay should be anticipated when ordering these items.
- Due to standardization, parts with part numbers (Δ-ΔΔΔ-ΔΔΔ-XX or Δ-ΔΔΔΔ-ΔΔΔ-X) may be different from those used in the set.

CAPACITORS:
- All capacitors are in μF. Common capacitors are omitted. Refer to the following lists for their part numbers. MF:μF, PF:μμF.

RESISTORS
- All resistors are in ohms. Common 1/4W, 1/8W and 1/16W carbon resistors are omitted. Refer to the following lists for their part numbers.
- F : nonflammable

COILS
- MMH : mH, UH : μH

The components identified by shading and mark ⚠ are critical for safety. Replace only with part number specified.

Les composants identifiés par une trame et une marque ⚠ sont critiques pour la sécurité. Ne les remplacer que par une pièce portant le numéro spécifié.

ELECTRICAL PARTS

Ref.No.	Part No.	Description
R898	1-212-938-00	FUSIBLE 1.5 5% 1/2W F
R944	1-212-853-00	FUSIBLE 6.8 5% 1/4W F
R945	1-212-853-00	FUSIBLE 6.8 5% 1/4W F
RV101	1-224-645-XX	RES, ADJ, CARBON 10K (PB LEVEL/L)
RV102	1-224-647-XX	RES, ADJ, CARBON 47K (REC LEVEL/L)
RV103	1-226-235-00	RES, ADJ, CARBON 5K (LEVEL METER/L)
RV201	1-224-645-XX	RES, ADJ, CARBON 10K (PB LEVEL/R)
RV202	1-224-645-XX	RES, ADJ, CARBON 47K (REC LEVEL/R)
RV203	1-226-235-00	RES, ADJ, CARBON 5K (LEVEL METER/R)
RV301	1-226-991-00	RES, VAR, SLIDE 20K (REC LEVEL/L)
RV401	1-226-991-00	RES, VAR, SLIDE 20K (REC LEVEL/R)
RV801	1-226-234-00	RES, ADJ, CARBON 2K (MOTOR TORQUE)
RV901	1-224-661-00	RES, ADJ, METAL FILM 47K (DUTY)
RV902	1-226-431-00	RES, ADJ, CARBON 10K (OFFSET 1)
RV903	1-226-431-00	RES, ADJ, CARBON 10K (OFFSET 2)
RV904	1-226-429-00	RES, ADJ, CARBON 2K (GAIN 2)
RV905	1-226-429-00	RES, ADJ, CARBON 2K (GAIN 1)
RY501	1-515-323-00	RELAY
S501	1-553-607-00	SWITCH, PUSH (4 KEY) (TAPE)
S502	1-553-608-00	SWITCH, PUSH (DOLBY NR,MEMORY,COUNTER RESET)
S801 ⚠	1-553-318-00	SWITCH, PUSH (AC POWER)***(AEP,UK,E1,2)
S801 ⚠	1-553-319-00	SWITCH, PUSH (AC POWER)***(US,Canadian)
S802	1-553-605-00	SWITCH, MINIATURE (ACCIDENTAL ERASURE PREVENTION)
S803	1-552-809-00	SWITCH, SLIDE (TIMER)
S804	1-553-605-00	SWITCH, LEAF (CASSETTE DET)
S805	1-553-609-00	SWITCH, KEYBOARD (FUNCTION)
S806	1-553-609-00	SWITCH, KEYBOARD (FUNCTION)
S807	1-552-609-00	SWITCH, KEYBOARD (FUNCTION)
S808	1-553-609-00	SWITCH, KEYBOARD (FUNCTION)
S809	1-553-609-00	SWITCH, KEYBOARD (FUNCTION)
S810	1-553-609-00	SWITCH, KEYBOARD (FUNCTION)
S811	1-553-609-00	SWITCH, KEYBOARD (FUNCTION)
S901	1-553-606-00	SWITCH (TEST/SERVO)
T801 ⚠	1-446-976-00	TRANSFORMER, POWER***(E1,E2)
T801 ⚠	1-446-975-00	TRANSFORMER, POWER***(US,Canadian)
T801 ⚠	1-446-977-00	TRANSFORMER, POWER***(AEP,UK)
X901	1-527-809-00	OSCILLATOR, CRYSTAL

NOTE:
- Items with no part number and no description are not stocked because they are seldom required for routine service.
- Items marked " ♠ " are not stocked since they are seldom required for routine service. Some delay should be anticipated when ordering these items.
- Due to standardization, parts with part numbers (Δ-ΔΔΔ-ΔΔΔ-XX or Δ-ΔΔΔΔ-ΔΔΔ-X) may be different from those used in the set.

CAPACITORS:
- All capacitors are in μF. Common capacitors are omitted. Refer to the following lists for their part numbers. MF:μF, PF:μμF.

RESISTORS
- All resistors are in ohms. Common 1/4W, 1/8W and 1/16W carbon resistors are omitted. Refer to the following lists for their part numbers.
- F : nonflammable

COILS
- MMH : mH, UH : μH

The components identified by shading and mark ⚠ are critical for safety. Replace only with part number specified.

Les composants identifiés par une trame et une marque ⚠ sont critiques pour la sécurité. Ne les remplacer que par une pièce portant le numéro spécifié.

1/4 WATT CARBON RESISTORS

Ω	Part No.	Ω	Part No.	Ω	Part No.	Ω	Part No.	Ω	Part No.	Ω	Part No.	Ω	Part No.
1.0	1-246-401-00	10	1-246-425-00	100	1-246-449-00	1.0k	1-246-473-00	10k	1-246-497-00	100k	1-246-521-00	1.0M	1-246-545-00
1.1	1-246-402-00	11	1-246-426-00	110	1-246-450-00	1.1k	1-246-474-00	11k	1-246-498-00	110k	1-246-522-00	1.1M	1-210-814-00
1.2	1-246-403-00	12	1-246-427-00	120	1-246-451-00	1.2k	1-246-475-00	12k	1-246-499-00	120k	1-246-523-00	1.2M	1-210-815-00
1.3	1-246-404-00	13	1-246-428-00	130	1-246-452-00	1.3k	1-246-476-00	13k	1-246-500-00	130k	1-246-524-00	1.3M	1-210-816-00
1.5	1-246-405-00	15	1-246-429-00	150	1-246-453-00	1.5k	1-246-477-00	15k	1-246-501-00	150k	1-246-525-00	1.5M	1-210-817-00
1.6	1-246-406-00	16	1-246-430-00	160	1-246-454-00	1.6k	1-246-478-00	16k	1-246-502-00	160k	1-246-526-00	1.6M	1-210-818-00
1.8	1-246-407-00	18	1-246-431-00	180	1-246-455-00	1.8k	1-246-479-00	18k	1-246-503-00	180k	1-246-527-00	1.8M	1-210-819-00
2.0	1-246-408-00	20	1-246-432-00	200	1-246-456-00	2.0k	1-246-480-00	20k	1-246-504-00	200k	1-246-528-00	2.0M	1-210-820-00
2.2	1-246-409-00	22	1-246-433-00	220	1-246-457-00	2.2k	1-246-481-00	22k	1-246-505-00	220k	1-246-529-00	2.2M	1-210-821-00
2.4	1-246-410-00	24	1-246-434-00	240	1-246-458-00	2.4k	1-246-482-00	24k	1-246-506-00	240k	1-246-530-00	2.4M	1-244-754-00
2.7	1-246-411-00	27	1-246-435-00	270	1-246-459-00	2.7k	1-246-483-00	27k	1-246-507-00	270k	1-246-531-00	2.7M	1-244-755-00
3.0	1-246-412-00	30	1-246-436-00	300	1-246-460-00	3.0k	1-246-484-00	30k	1-246-508-00	300k	1-246-532-00	3.0M	1-244-756-00
3.3	1-246-413-00	33	1-246-437-00	330	1-246-461-00	3.3k	1-246-485-00	33k	1-246-509-00	330k	1-246-533-00	3.3M	1-244-757-00
3.6	1-246-414-00	36	1-246-438-00	360	1-246-462-00	3.6k	1-246-486-00	36k	1-246-510-00	360k	1-246-534-00	3.6M	1-244-758-00
3.9	1-246-415-00	39	1-246-439-00	390	1-246-463-00	3.9k	1-246-487-00	39k	1-246-511-00	390k	1-246-535-00	3.9M	1-244-759-00
4.3	1-246-416-00	43	1-246-440-00	430	1-246-464-00	4.3k	1-246-488-00	43k	1-246-512-00	430k	1-246-536-00	4.3M	1-244-760-00
4.7	1-246-417-00	47	1-246-441-00	470	1-246-465-00	4.7k	1-246-489-00	47k	1-246-513-00	470k	1-246-537-00	4.7M	1-244-761-00
5.1	1-246-418-00	51	1-246-442-00	510	1-246-466-00	5.1k	1-246-490-00	51k	1-246-514-00	510k	1-246-538-00	5.1M	1-244-762-00
5.6	1-246-419-00	56	1-246-443-00	560	1-246-467-00	5.6k	1-246-491-00	56k	1-246-515-00	560k	1-246-539-00		
6.2	1-246-420-00	62	1-246-444-00	620	1-246-468-00	6.2k	1-246-492-00	62k	1-246-516-00	620k	1-246-540-00		
6.8	1-246-421-00	68	1-246-445-00	680	1-246-469-00	6.8k	1-246-493-00	68k	1-246-517-00	680k	1-246-541-00		
7.5	1-246-422-00	75	1-246-446-00	750	1-246-470-00	7.5k	1-246-494-00	75k	1-246-518-00	750k	1-246-542-00		
8.2	1-246-423-00	82	1-246-447-00	820	1-246-471-00	8.2k	1-246-495-00	82k	1-246-519-00	820k	1-246-543-00		
9.1	1-246-424-00	91	1-246-448-00	910	1-246-472-00	9.1k	1-246-496-00	91k	1-246-520-00	910k	1-246-544-00		

MYLAR CAPACITORS

CAP. (μF)	RATING 50 VOLT. PART No.	100 VOLT. PART No.	200 VOLT. PART No.	CAP. (μF)	50 VOLT. PART No.	100 VOLT. PART No.	200 VOLT. PART No.	CAP. (μF)	50 VOLT. PART No.	100 VOLT. PART No.	200 VOLT. PART No.
0.001	1-108-227-00	1-108-365-00	1-108-409-00	0.01	1-108-239-00	1-108-377-00	1-108-421-00	0.1	1-108-251-00	1-108-389-00	1-108-433-00
0.0012	1-108-351-00	1-108-366-00	1-108-410-00	0.012	1-108-357-00	1-108-378-00	1-108-422-00	0.12	1-108-363-00	1-108-390-00	1-108-434-00
0.0015	1-108-228-00	1-108-367-00	1-108-411-00	0.015	1-108-240-00	1-108-379-00	1-108-423-00	0.15	1-108-252-00	1-108-391-00	1-108-435-00
0.0018	1-108-352-00	1-108-368-00	1-108-412-00	0.018	1-108-358-00	1-108-380-00	1-108-424-00	0.18	1-108-364-00	1-108-392-00	1-108-436-00
0.0022	1-108-230-00	1-108-369-00	1-108-413-00	0.022	1-108-242-00	1-108-381-00	1-108-425-00	0.22	1-108-254-00	1-108-393-00	1-108-437-00
0.0027	1-108-353-00	1-108-370-00	1-108-414-00	0.027	1-108-359-00	1-108-382-00	1-108-426-00	0.27	1-108-854-00	–	–
0.0033	1-108-232-00	1-108-371-00	1-108-415-00	0.033	1-108-244-00	1-108-383-00	1-108-427-00	0.33	1-108-855-00	–	–
0.0039	1-108-354-00	1-108-372-00	1-108-416-00	0.039	1-108-360-00	1-108-384-00	1-108-428-00	0.39	1-108-856-00	–	–
0.0047	1-108-234-00	1-108-373-00	1-108-417-00	0.047	1-108-246-00	1-108-385-00	1-108-429-00	0.47	1-108-857-00	–	–
0.0056	1-108-355-00	1-108-374-00	1-108-418-00	0.056	1-108-361-00	1-108-386-00	1-108-430-00				
0.0068	1-108-237-00	1-108-375-00	1-108-419-00	0.068	1-108-249-00	1-108-387-00	1-108-431-00				
0.0082	1-108-356-00	1-108-376-00	1-108-420-00	0.082	1-108-362-00	1-108-388-00	1-108-432-00				

TANTALUM CAPACITORS

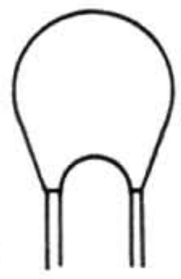

CAP. (μF)	RATING 3.15 VOLT. PART No.	6.3 VOLT. PART No.	10 VOLT. PART No.	16 VOLT. PART No.	20 VOLT. PART No.	25 VOLT. PART No.	35 VOLT. PART No.
					→ : Use the high voltage rated one.		
0.01					→	→	1-131-396-00
0.015						→	1-131-397-00
0.022						→	1-131-398-00
0.033						→	1-131-399-00
0.047						→	1-131-400-00
0.068					→	→	1-131-401-00
0.1					→	→	1-131-402-00
0.15					→	→	1-131-403-00
0.22					→	→	1-131-404-00
0.33					→	1-131-409-00	1-131-405-00
0.47	–	–	–	–	1-131-412-00	→	1-131-406-00
0.68	–	–	–	1-131-415-00	→	1-131-410-00	1-131-407-00
1.0	–	–	1-131-418-00	–	1-131-413-00	→	1-131-408-00
1.5	–	1-131-421-00	–	1-131-416-00	→	1-131-411-00	1-131-348-00
2.2	1-131-424-00	–	1-131-419-00	–	1-131-414-00	1-131-355-00	1-131-349-00
3.3	–	1-131-422-00	–	1-131-417-00	1-131-362-00	1-131-356-00	1-131-350-00
4.7	1-131-425-00	–	1-131-420-00	1-131-369-00	1-131-363-00	1-131-357-00	1-131-351-00
6.8	–	1-131-423-00	1-131-376-00	1-131-370-00	1-131-364-00	1-131-358-00	1-131-352-00
10	1-131-426-00	1-131-383-00	1-131-377-00	1-131-371-00	1-131-365-00	1-131-359-00	1-131-353-00
15	1-131-390-00	1-131-384-00	1-131-378-00	1-131-372-00	1-131-366-00	1-131-360-00	–
22	1-131-391-00	1-131-385-00	1-131-379-00	1-131-373-00	1-131-367-00		
33	1-131-392-00	1-131-386-00	1-131-380-00	1-131-374-00			
47	1-131-393-00	1-131-387-00	1-131-381-00	–			
68	1-131-394-00	1-131-388-00	–	–			
100	1-131-395-00	–	–	–			

TANTALUM CAPACITORS

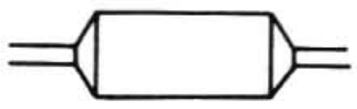

CAP. (μF)	RATING 3 VOLT. PART No.	6.3 VOLT. PART No.	10 VOLT. PART No.	16 VOLT. PART No.	20 VOLT. PART No.	35 VOLT. PART No.
0.033						1-131-273-00
0.047						1-131-274-00
0.068						1-131-275-00
0.1						1-131-276-00
0.15						1-131-277-00
0.22			–	–	1-131-262-00	1-131-278-00
0.33			–	–	1-131-263-00	1-131-279-00
0.47			1-131-169-00	–	1-131-264-00	1-131-280-00
0.68			–	1-131-258-00	1-131-265-00	1-131-281-00
1.0			1-131-254-00	–	1-131-266-00	1-131-282-00
1.5		1-131-250-00	–	–	1-131-267-00	1-131-283-00
2.2		–	–	1-131-259-00	1-131-268-00	1-131-284-00
3.3		–	1-131-255-00	–	1-131-269-00	–
4.7		1-131-251-00	1-131-171-00	–	1-131-270-00	–
6.8		–	–	1-131-260-00	1-131-271-00	–
10	–	–	1-131-256-00	–	1-131-272-00	–
15	–	1-131-252-00	–	1-131-261-00		
22	–	–	1-131-257-00	–		
33	1-131-176-00	1-131-253-00	1-131-173-00	–		
47	1-131-288-00	1-131-174-00	–	–		
100	1-131-177-00					

ELECTROLYTIC CAPACITORS

CAP. (μF)	RATING → : Use the high voltage rated one.					
	6.3 VOLT.	10 VOLT.	16 VOLT.	25 VOLT.	35 VOLT.	50 VOLT.
	PART No.	PART No.	PART No.	PART No.	PART No.	PART No.
0.47					→	1-121-726-00
1.0					→	1-121-391-00
2.2					→	1-121-450-00
3.3	→	→	→	1-121-392-00	→	1-121-393-00
4.7	→	→	→	1-121-395-00	→	1-121-396-00
10	→	→	1-121-651-00	1-121-398-00	→	1-121-738-00
22	→	→	1-121-479-00	1-121-480-00	1-121-662-00	1-121-152-00
33	→	→	1-121-403-00	1-121-404-00	1-121-652-00	1-121-405-00
47	→	1-121-352-00	1-121-409-00	1-121-410-00	1-121-653-00	1-121-411-00
100	→	1-121-414-00	1-121-415-00	1-121-416-00	1-121-357-00	1-121-417-00
220	1-121-419-00	1-121-420-00	1-121-421-00	1-121-422-00	1-121-261-00	1-121-423-00
330	1-121-751-00	1-121-805-00	1-121-521-00	1-121-654-00	1-121-655-00	1-121-656-00
470	1-121-424-00	1-121-425-00	1-121-426-00	1-121-733-00	1-121-361-00	1-121-810-00
1000	–	1-121-736-00	1-121-245-00	1-121-657-00	1-121-388-00	1-123-061-00
2200	1-121-658-00	1-121-659-00	1-121-660-00	1-123-067-00	1-121-984-00	–
3300	1-121-661-00	1-123-075-00	1-123-071-00	–	–	–

CAP. (μF)	100 VOLT.	160 VOLT.	250 VOLT.	350 VOLT.
	PART No.	PART No.	PART No.	PART No.
0.47	–	–	–	–
1.0	1-123-249-00	1-123-252-00	1-123-003-00	1-121-168-00
2.2	1-123-250-00	1-123-026-00	–	1-123-028-00
3.3	1-121-995-00	–	1-123-004-00	1-123-006-00
4.7	1-123-255-00	1-121-246-00	1-121-759-00	1-123-007-00
10	1-121-126-00	1-121-999-00	1-123-254-00	1-123-008-00
22	1-121-996-00	1-123-253-00	1-123-005-00	1-123-022-00
33	1-121-997-00	1-121-757-00	–	–
47	1-123-251-00	1-121-919-00	–	–
100	1-123-084-00	–	–	–

CERAMIC CAPACITORS

CAP. (pF)	RATING							
	50 VOLT.	CAP. (pF)	50 VOLT.	CAP. (pF)	50 VOLT.	CAP. (μF)	50 VOLT.
	PART No.		PART No.		PART No.		PART No.
0.5	1-101-837-00	22	1-102-959-00	150	1-101-361-00	0.001	1-102-074-00
0.75	1-101-586-00	24	1-102-960-00	160	1-101-367-00	0.0012	1-102-118-00
1.0	1-102-934-00	27	1-102-961-00	180	1-102-976-00	0.0015	1-102-119-00
1.5	1-101-576-00	30	1-102-962-00	200	1-102-977-00	0.0018	1-102-120-00
2.0	1-102-935-00	33	1-102-963-00	220	1-102-978-00	0.0022	1-102-121-00
3	1-102-936-00	36	1-102-964-00	240	1-102-979-00	0.0027	1-102-122-00
4	1-102-937-00	39	1-102-965-00	270	1-102-980-00	0.0033	1-102-123-00
5	1-102-942-00	43	1-102-966-00	300	1-102-981-00	0.0039	1-102-124-00
6	1-102-943-00	47	1-101-880-00	330	1-102-820-00	0.0047	1-102-125-00
7	1-102-944-00	51	1-101-882-00	360	1-102-821-00	0.0056	1-102-126-00
8	1-102-945-00	56	1-101-884-00	390	1-102-822-00	0.0068	1-102-127-00
9	1-102-946-00	62	1-101-886-00	430	1-102-823-00	0.0082	1-102-128-00
10	1-102-947-00	68	1-101-888-00	470	1-102-824-00	0.01	1-102-129-00
11	1-102-948-00	75	1-101-890-00	510	1-101-059-00	0.022	1-101-005-00
12	1-102-949-00	82	1-102-971-00	560	1-102-115-00	0.047	1-101-006-00
13	1-102-950-00	91	1-102-972-00	680	1-102-116-00		
15	1-102-951-00	100	1-102-973-00	820	1-102-117-00		
16	1-102-952-00	110	1-102-815-00				
18	1-102-953-00	120	1-102-816-00				
20	1-102-958-00	130	1-101-081-00				

0.001μF = 1,000pF

CERAMIC (SEMICONDUCTOR) CAPACITORS

CAP. (μF)	RATING → : Use the high voltage rated one.				
	25 VOLT.	50 VOLT.	CAP. (μF)	25 VOLT.	50 VOLT.
	PART No.	PART No.		PART No.	PART No.
0.001	→	1-161-039-00	0.018	1-161-016-00	1-161-054-00
0.0012	→	1-161-040-00	0.022	1-161-017-00	1-161-055-00
0.0015		1-161-041-00	0.027	1-161-018-00	1-161-056-00
0.0018		1-161-042-00	0.033	1-161-019-00	1-161-057-00
0.0022		1-161-043-00	0.039	1-161-010-00	1-161-058-00
0.0027	→	1-161-044-00	0.047	1-161-021-00	1-161-059-00
0.0033	→	1-161-045-00	0.056	→	1-161-060-00
0.0039	→	1-161-046-00	0.068	→	1-161-061-00
0.0047	→	1-161-047-00	0.082	1-161-024-00	1-161-062-00
0.0056	→	1-161-048-00	0.1	1-161-025-00	1-161-063-00
0.0068	→	1-161-049-00			
0.0082	1-161-012-00	1-161-050-00			
0.01	1-161-013-00	1-161-051-00			
0.012	→	1-161-052-00			
0.015	1-161-015-00	1-161-053-00			

Sony Corporation