TC-KE200/KE300/KE400S/RX300

SERVICE MANUAL

Ver 1.1 2001. 05

US Model
TC-KE400S

Canadian Model
TC-RX300

AEP Model
TC-KE200/KE300/KE400S

UK Model
TC-KE200/KE400S

E Model
TC-KE300

Australian Model
TC-KE300/KE400S

Photo : TC-KE400S

• Dolby noise reduction and HX Pro headroom extension manufactured under license from Dolby Laboratories Licensing Corporation. HX Pro originated by Bang & Olufsen.

"DOLBY", the double-D symbol DD and "HX PRO" are trademarks of Dolby Laboratories Licensing Corporation.

Model Name Using Similar Mechanism	TC-K215/K361/K461S/RX361
Tape Transport Mechanism Type	TC-KE200 : TCM-190VB22CS TC-KE300/KE400S : TCM-190VB12CS TC-RX300 : TCM-190RB12C

SPECIFICATIONS

System

Recording system
4-track 2-channel stereo

Fast winding time (approx.)
90 sec. (with Sony C-60 cassette)

Bias
AC bias

Heads
Erasing head × 1 (F&F head)
Playing/Recording head × 1 (SD head)

Motors
Capstan motor × 1 (DC servo motor)
Reel motor × 1 (DC motor)

Signal-to-noise ratio (at peak level, weighted, and with Dolby NR off)
Type I tape, Sony Type I (NORMAL): 55 dB
Type II tape, Sony Type II (HIGH): 57 dB
Type IV tape, Sony Type IV (METAL): 58 dB

S/N ratio improvement (approximate values)
With Dolby B NR on: 5 dB at 1 kHz, 10 dB at 5 kHz
With Dolby C NR on: 15 dB at 500 Hz, 20 dB at 1 kHz

Harmonic distortion
0.4% (with Type I tape, Sony Type I (NORMAL): 160n Wb/m 315 Hz, 3rd H.D.)
1.8% (with Type IV tape, Sony Type IV (METAL): 250n Wb/m 315 Hz, 3rd H.D.)

Frequency response (Dolby NR off)
Type I tape, Sony Type I (NORMAL) :
EXCEPT KE200
30 - 15,000 Hz (± 3 dB, IEC)
20 - 16,000 Hz (± 6 dB)
KE200
30 - 14,000 Hz (± 3 dB, IEC)
20 - 15,000 Hz (± 6 dB)
Type II tape, Sony Type II (HIGH) :
EXCEPT KE200
30 - 16,000 Hz (± 3 dB, IEC)
20 - 17,000 Hz (± 6 dB)
KE200
30 - 15,000 Hz (± 3 dB, IEC)
20 - 16,000 Hz (± 6 dB)

— Continued on page 2 —

STEREO CASSETTE DECK

SONY®

Type IV tape, Sony Type IV (METAL) :
EXCEPT KE200
30 - 18,000 Hz (± 3 dB, IEC)
30 - 13,000 Hz (± 3 dB, − 4 dB recording)
20 - 19,000 Hz (± 6 dB)
KE200
30 - 15,000 Hz (± 3 dB, IEC)
30 - 13,000 Hz (± 3 dB, − 4 dB recording)
20 - 16,000 Hz (± 6 dB)

Wow and flutter
± 0.13% W. Peak (IEC)
0.07% W. RMS (NAB)
±0.18% W. Peak (DIN)

Inputs

Line inputs (phono jacks)
Sensitivity: 0.16 V
Input impedance: 47 kilohms

Outputs

Line outputs (phono jacks)
Rated output level: 0.5 V at a load impedance of 47 kilohms
Load impedance: Over 10 kilohms

Headphones (stereo phone jack)
Output level: 0.25 mW at a load impedance of 32 ohms

General

Power requirements

Where purchased	Power requirements
US, Canadian model :	120 V AC, 60 Hz
AEP, UK, German, Malaysia, Singapore model :	220 - 230 V AC, 50/60 Hz
Australian model :	240 V AC, 50/60 Hz
E model :	110 - 120 V or 220 - 240 V AC, 50/60 Hz adjustable with the voltage selector

Power consumption
19 W (EXCEPT KE400S)
20 W (KE400S)

Dimensions (approx.) (w/h/d)
430 × 120 × 310 mm (17 × 4 3/4 × 12 1/4 inches)
incl. projecting parts and controls

Mass (approx.)
3.5 kg (7 lbs 11 oz)

Supplied accessories
Audio connecting cords (2)

Design and specifications are subject to change without notice.

TABLE OF CONTENTS

Specifications ····· 1

1. GENERAL
Identifying the Parts on the Front Panel ····· 4

2. DISASSEMBLY
2-1. Front Panel Removal ····· 5
2-2. Mechanism Deck Section Removal ····· 5
2-3. Head and Pinch Roller Removal ····· 6
2-4. Fitting Base Block Removal ····· 6
2-5. Motor Removal ····· 6

3. ADJUSTMENTS
3-1. Mechanical Adjustments ····· 7
3-2. Electrical Adjustments ····· 7

4. EXPLANATION OF IC TERMINALS ····· 10

5. DIAGRAMS
5-1. Printed Wiring Boards − Main Section − (TC-KE200/KE300/RX300) ····· 12
5-2. Schematic Diagram − Main Section − (TC-KE200/KE300/RX300) ····· 15
5-3. Schematic Diagram − Main Section − (TC-KE400S) ····· 20
5-4. Printed Wiring Boards − Main Section − (TC-KE400S) ····· 25
5-5. Circuit Boards Location ····· 28
5-6. Printed Wiring Boards − Audio Section − ····· 29
5-7. Schematic Diagram − Audio Section − ····· 33

6. EXPLODED VIEWS
6-1. Chassis Section ····· 37
6-2. Front Panel Section ····· 39
6-3. Mechanism Section 1 ····· 40
6-4. Mechanism Section 2 ····· 41

7. ELECTRICAL PARTS LIST ····· 42

TC-KE200
TC-KE300
TC-KE400S
TC-RX300

MODEL IDENTIFICATION

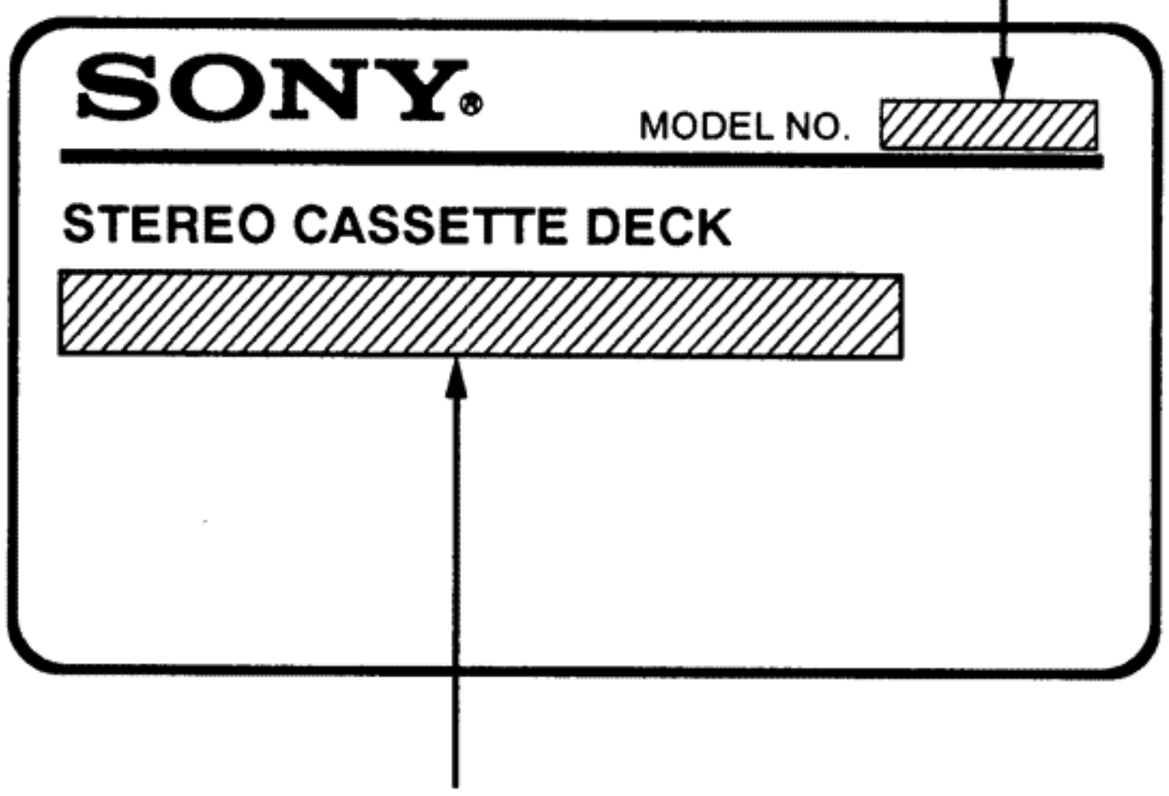

US, Canadian model : AC 120V 60Hz
Australian model : AC 240V~50/60Hz
AEP, UK, German, Malaysia,
Singapore model : AC 220-230V~50/60Hz
E model : AC 110-120V or 220-240V~50/60Hz

SAFETY-RELATED COMPONENT WARNING!!

COMPONENTS IDENTIFIED BY MARK ⚠ OR DOTTED LINE WITH MARK ⚠ ON THE SCHEMATIC DIAGRAMS AND IN THE PARTS LIST ARE CRITICAL TO SAFE OPERATION. REPLACE THESE COMPONENTS WITH SONY PARTS WHOSE PART NUMBERS APPEAR AS SHOWN IN THIS MANUAL OR IN SUPPLEMENTS PUBLISHED BY SONY.

ATTENTION AU COMPOSANT AYANT RAPPORT À LA SÉCURITÉ!

LES COMPOSANTS IDENTIFIÉS PAR UNE MARQUE ⚠ SUR LES DIAGRAMMES SCHÉMATIQUES ET LA LISTE DES PIÈCES SONT CRITIQUES POUR LA SÉCURITÉ DE FONCTIONNEMENT. NE REMPLACER CES COMPOSANTS QUE PAR DES PIÈCES SONY DONT LES NUMÉROS SONT DONNÉS DANS CE MANUEL OU DANS LES SUPPLÉMENTS PUBLIÉS PAR SONY.

SAFETY CHECK-OUT

After correcting the original service problem, perform the following safety check before releasing the set to the customer:
Check the antenna terminals, metal trim, "metallized" knobs, screws, and all other exposed metal parts for AC leakage. Check leakage as described below.

LEAKAGE TEST

The AC leakage from any exposed metal part to earth ground and from all exposed metal parts to any exposed metal part having a return to chassis, must not exceed 0.5 mA (500 microampers). Leakage current can be measured by any one of three methods.

1. A commercial leakage tester, such as the Simpson 229 or RCA WT-540A. Follow the manufacturers' instructions to use these instruments.
2. A battery-operated AC milliammeter. The Data Precision 245 digital multimeter is suitable for this job.
3. Measuring the voltage drop across a resistor by means of a VOM or battery-operated AC voltmeter. The "limit" indication is 0.75 V, so analog meters must have an accurate low-voltage scale. The Simpson 250 and Sanwa SH-63Trd are examples of a passive VOM that is suitable. Nearly all battery operated digital multimeters that have a 2 V AC range are suitable. (See Fig. A)

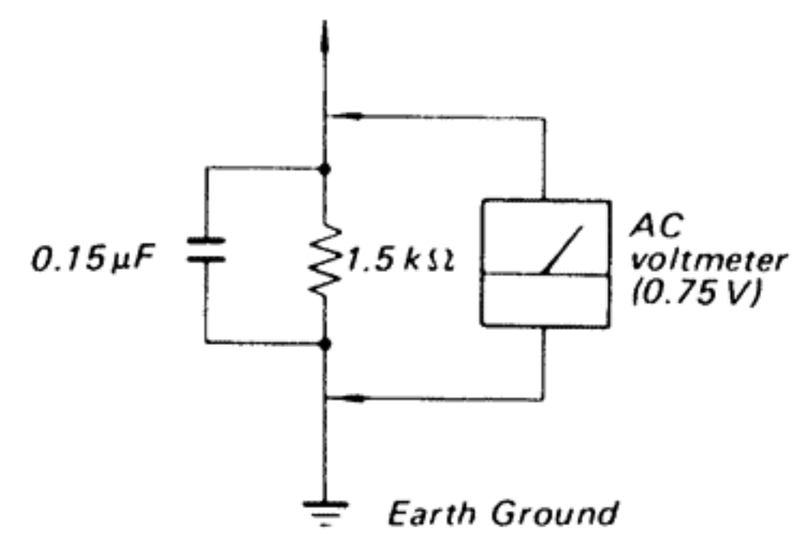

Fig. A. Using an AC voltmeter to check AC leakage.

SECTION 1
GENERAL

IDENTIFYING THE PARTS ON THE FRONT PANEL

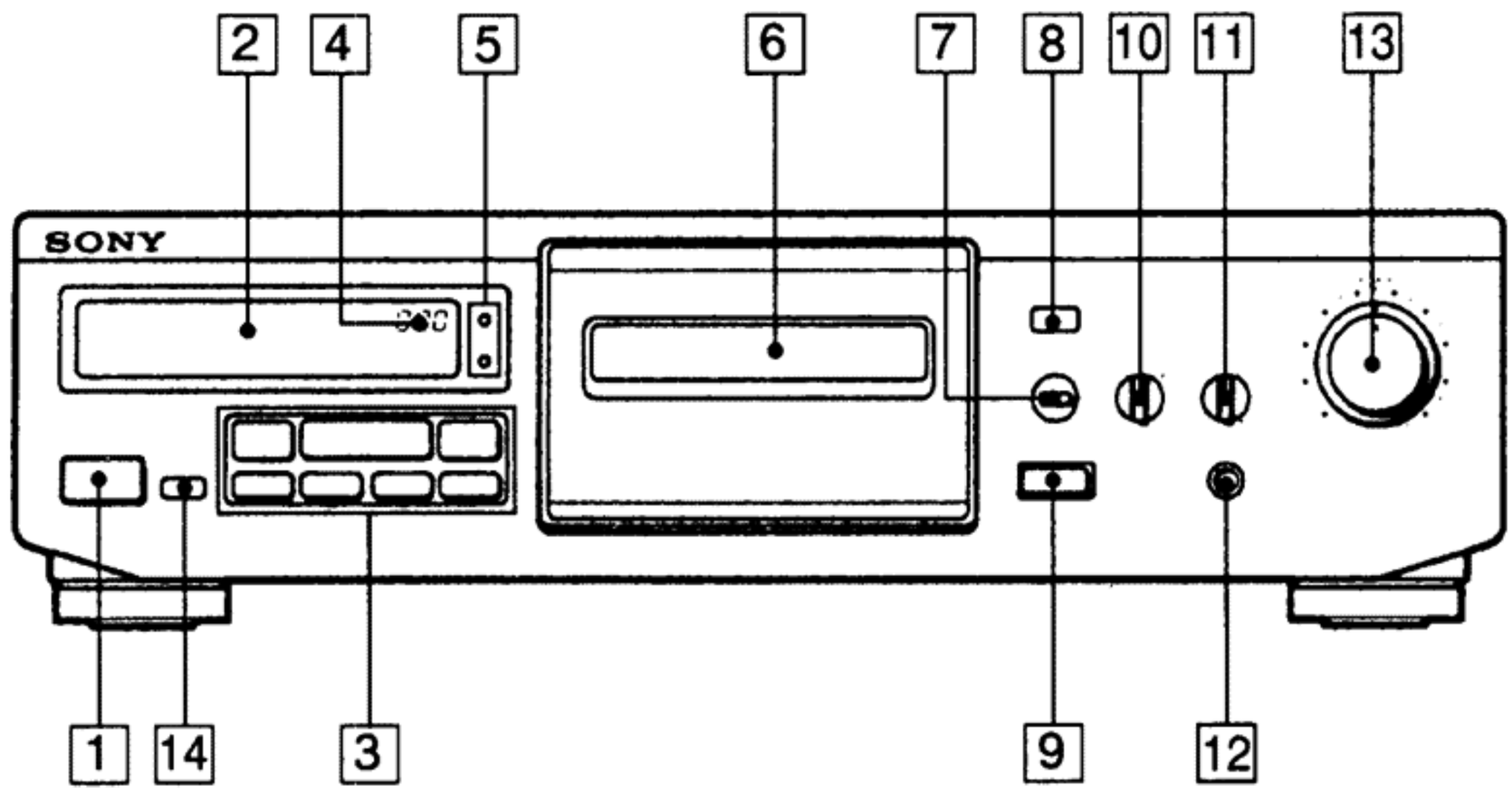

1 POWER switch
2 Display panel
3 Tape operation buttons
- ◀◀ (rewind) (Multi-AMS**) button
- ▷ (play) button (KE200/KE300/KE400S)
- ◁/▷ (forward play and reverse play) button (RX300)
- ▶▶ (fast-forward) (Multi-AMS**) button
- ■ (stop) button
- ❚❚ PAUSE button
- ○ REC MUTE (record muting) button
- ● REC (record) button

4 Tape counter
5 Counter buttons
RESET button
MEMORY button
6 Cassette holder
7 AUTO CAL button (EXCEPT KE200)
8 Remote control sensor
9 ≜ (eject) button
10 DOLBY NR (noise reduction) button
11 BALANCE control
12 PHONES jack (stereo phone jack)
13 REC (recording) LEVEL control
14 DIRECTION MODE switch (RX300 only)

**AMS is an abbreviation for Automatic Music Sensor

SECTION 2
DISASSEMBLY

Note : Follow the disassembly procedure in the numerical order given.

CASE
Unscrew the four case attachment screws M3 × 8 and remove the case.

2-1. FRONT PANEL REMOVAL

FRONT PANEL ❶ – ❼
VOLTAGE SELECTOR 1 – 2

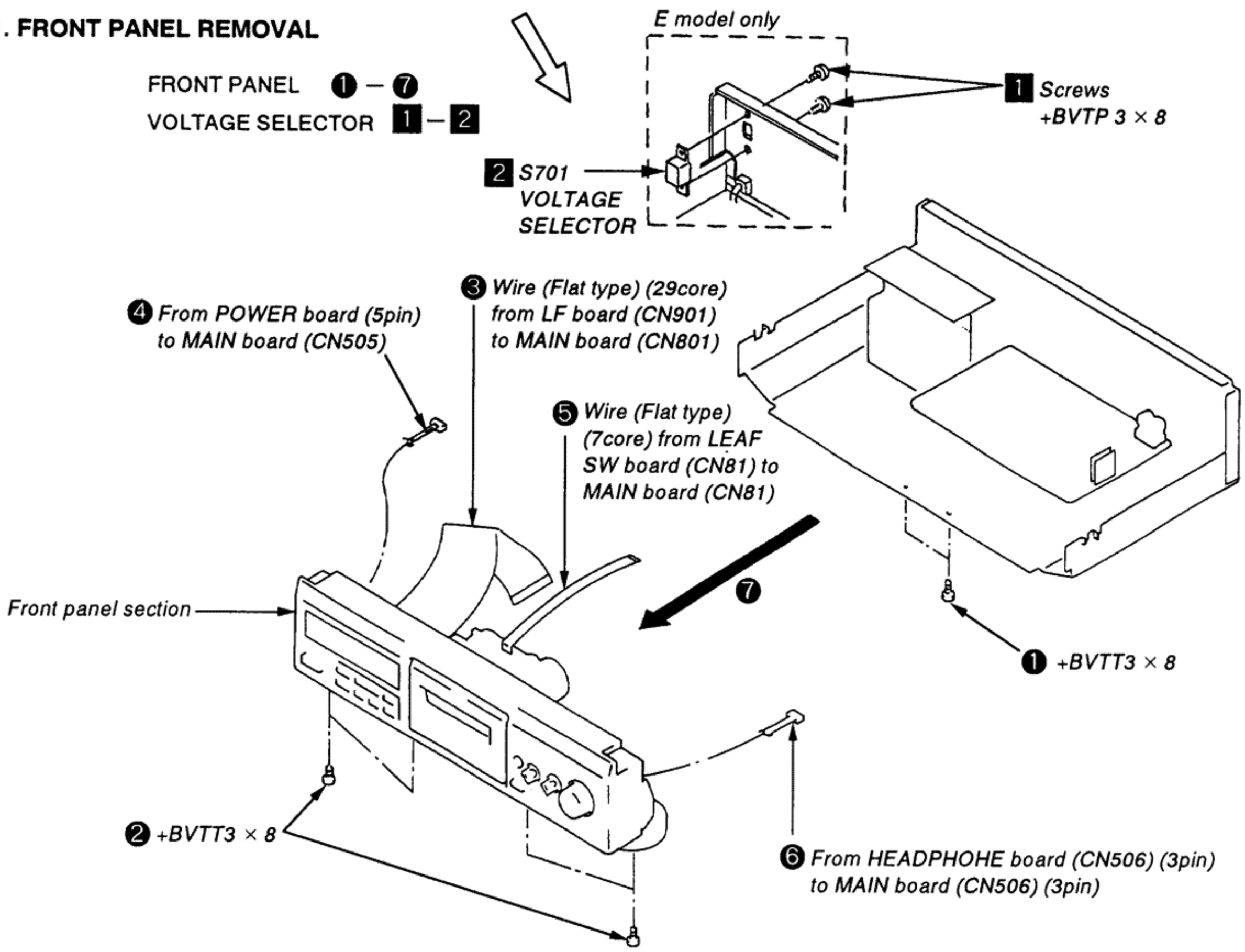

2-2. MECHANISM DECK SECTION REMOVAL

❶ Press the EJECT button.

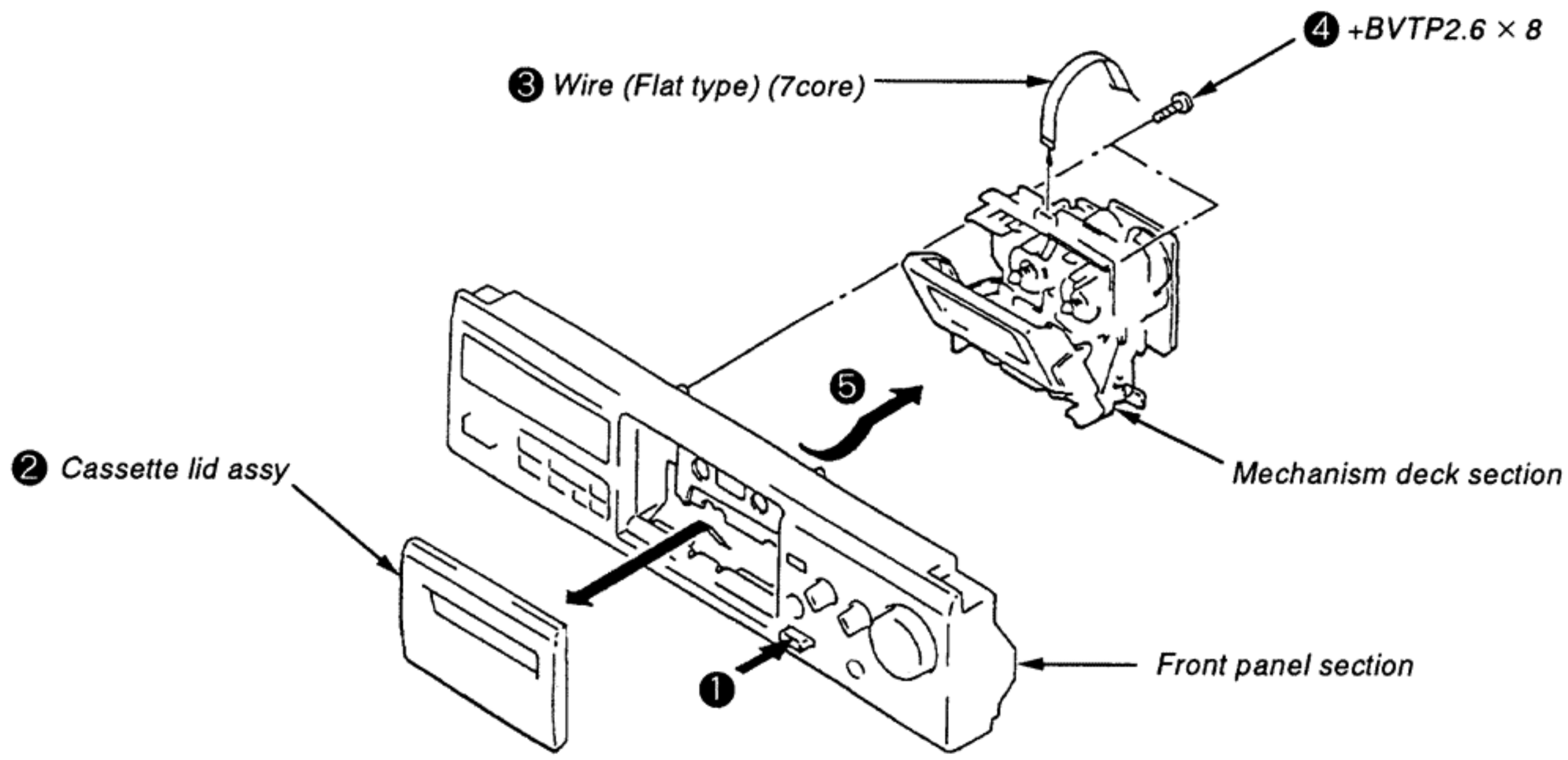

2-3. HEAD AND PINCH ROLLER REMOVAL

EXCEPT TC-RX300 :

❻ Erase head (HE901)

❺ +B 2 × 10

❸ Screw (adjimuth)

❷ Lever (pinch F) assy

❹ REC/PB head (HRP901)

❶ Claw

TC-RX300 :

❸ Claw

❹ Lever (pinch lever REV) assy

❶ Claw

❻ Head base assy (HRPE901)

❺ Torsion spring

❷ Lever (pinch lever FWD) assy

2-4. FITTING BASE BLOCK REMOVAL

❶ Screws (PTPWH2 × 23)

❷ Fitting base block

TC-RX300

When installing, pull the FR belt and put around the claws.

When installing, pull the capstan belt and put around the claws.

2-5. MOTOR REMOVAL

❷ Motor flexible board (CNP72)

Ground plate

❶ Connectors (CNP71)

❻ Capstan motor (M2)

❹ Audio board

❺ +B2.6 × 3

❸ Claw

Square belt (FR)

❽ Reel motor (M1)

❼ +P2.6 × 2.8

SECTION 3
ADJUSTMENTS

3-1. MECHANICAL ADJUSTMENTS

PRECAUTION

1. Clean the following parts with a denatured alcohol-moistened swab:
   record/playback/erase head pinch roller
   rubber belts capstan
2. Demagnetize the record/playback head with a head demagnetizer.
3. Do not use a magnetized screwdriver for the adjustment.
4. After the adjustments, apply suitable locking compound to the parts adjusted.
5. The adjustments should be performed with the rated power supply voltage unless otherwise noted.

Torque Measurement

Mode	Torque meter	Meter reading
Forward	CQ-102C	35 to 60g • cm (0.48 to 0.83 oz • inch)
Forward back tension	CQ-102C	2 to 60g • cm (0.03 to 0.08 oz • inch)
Reverse (RX300 only)	CQ-102RC	35 to 60g • cm (0.48 to 0.83 oz • inch)
Reverse back tension (RX300 only)	CQ-102RC	2 to 6g • cm (0.03 to 0.08 oz • inch)
FF/REW	CQ-201B	70 to 110g•cm (0.98 to 1.52 oz•inch)

3-2. ELECTRICAL ADJUSTMENTS

PRECAUTION

1. The adjustment should be performed in the publication.
   (Be sure to male playback adjustment at first.)
2. The adjustments and measurement should be performed for both L-CH and R-CH.
   - Position of switches and controls knobs
     DOLBY NR switch : OFF
   - Standard record position:
     Deliver the standard input signal level to input jack and set the REC LEVEL control to obtain the standard output signal level as follows.

– Record Mode –

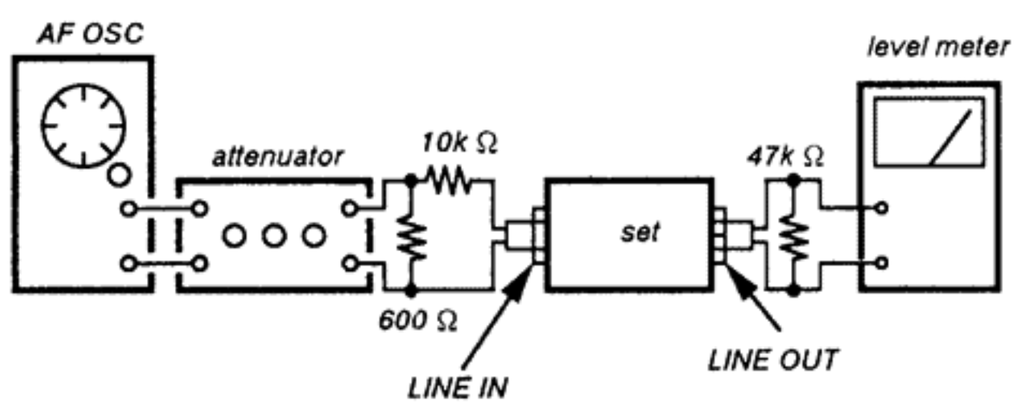

Standard Input Level

Input terminal	LINE IN
source impedance	10k Ω
input signal level	0.5V (− 3.8dB)

Standard Output Level

Output terminal	LINE OUT
load impedance	47k Ω
output signal level	0.5V (− 3.8dB)

Test Tape

Tape	Contents	Use
P-4-A100	10kHz, − 10dB	Azimuth Adjustment
P-4-L300	315Hz, 0dB	PB Level Adjustment
WS-48B	3kHz, 0dB	Tape Speed Adjustment

0dB=0.775V

Test Mode

1. Insert a short-circuit plug into TP801 (2P) and turn ON the power switch. (Earth pin ⑲ of IC801 and turn ON the power switch.)
   At first, all the fluorescent tubes light up, then the system returns to normal display. (However, "00 00" is not displayed on the counter.)
2. To release the test mode, remove the short plug and turn off the power switch.
3. Remove the short plug after completion of adjustment.

Record/Playback Head Azimuth Adjustment

Procedure :

1. playback Mode

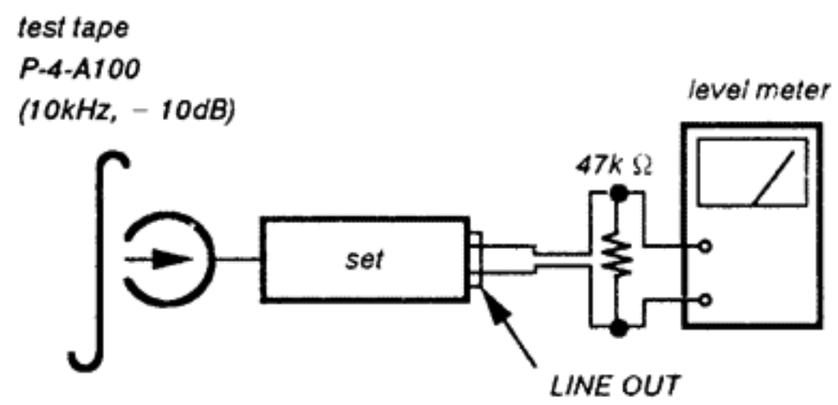

2. Turn the adjustment screw for the maximum output levels. If these levels do not match, turn the adjustment screw until both of output levels match together within 1dB.

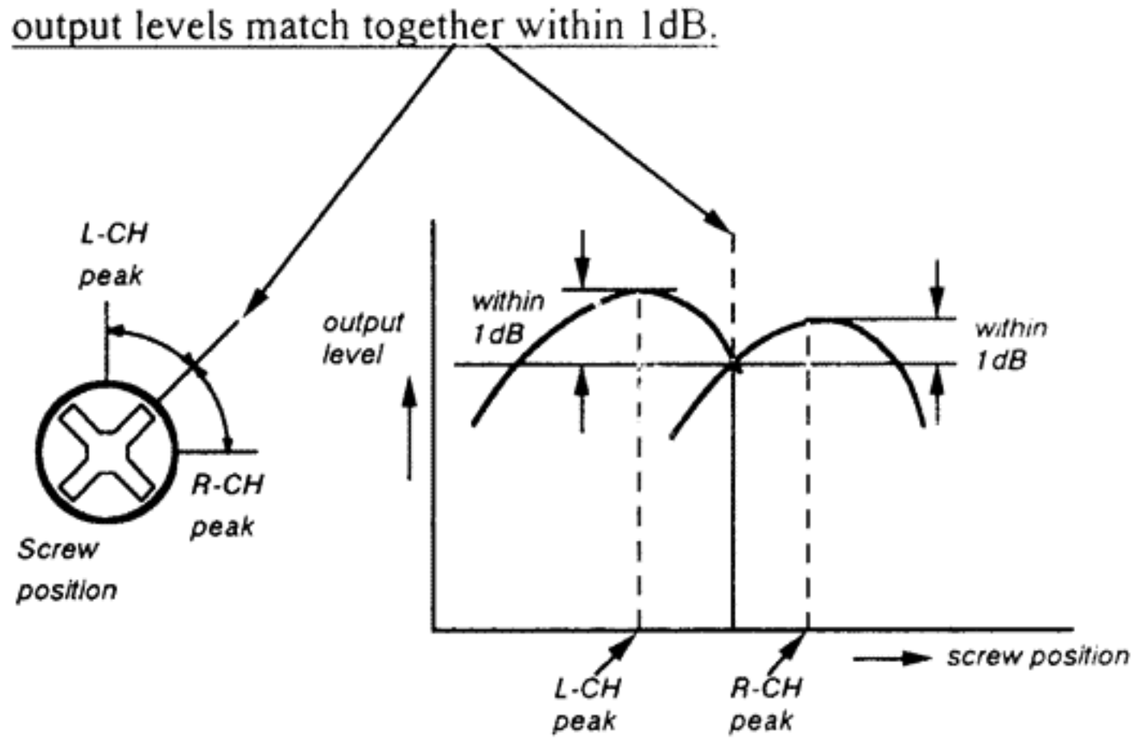

3. Phase check
   Playback Mode

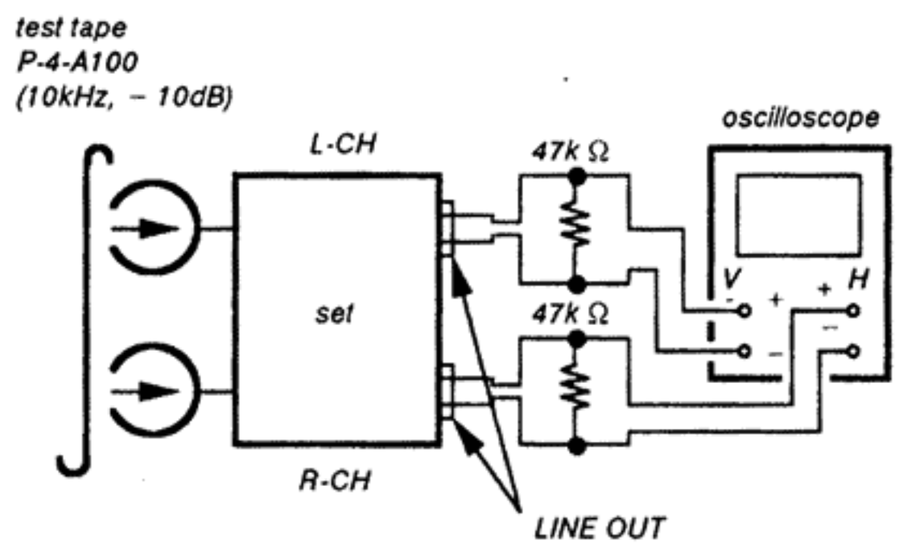

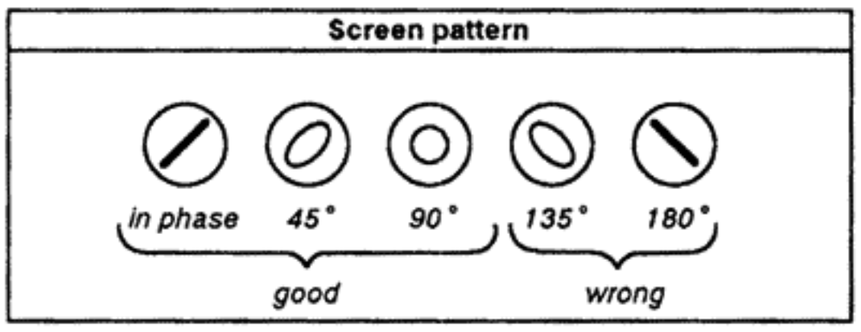

4. After the adjustment, lock the adjustment screws with suitable locking compound.

Adjustment Location : − record/playback head −

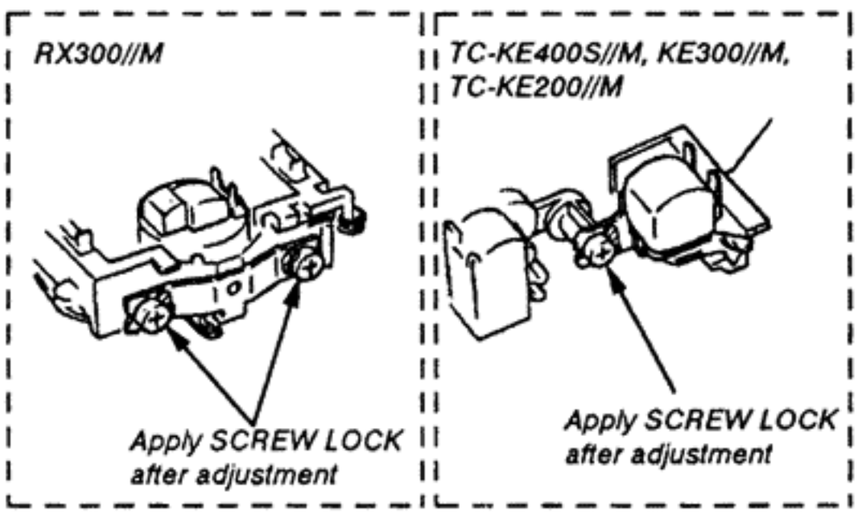

Tape Speed Adjustment

Procedure :

− Playback Mode −

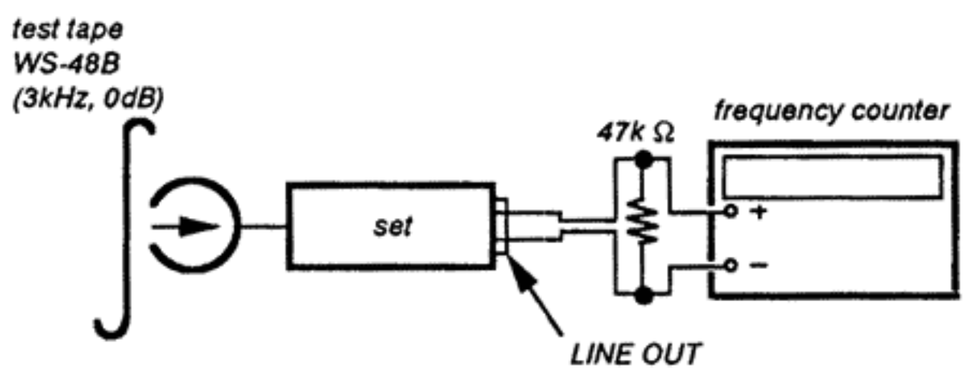

1. Adjust RV71 so that the frequency counter reading becomes 3,000 ± 10Hz.
2. If, the frequency conter reading does not become 3,000 ± 10Hz. Turn RV72 and back to 1st. step again.

Note :

Turn RV72 to clockwise − Tape speed becomes fast.
Turn RV72 to counter clockwise − Tape speed becomes slow.

Frequency difference between the beginning and the end of the tape should be within 1%.

Adjustment Location : AUDIO board (Page 9)

Playback Level Adjustment

Procedure :

− Playback Mode −

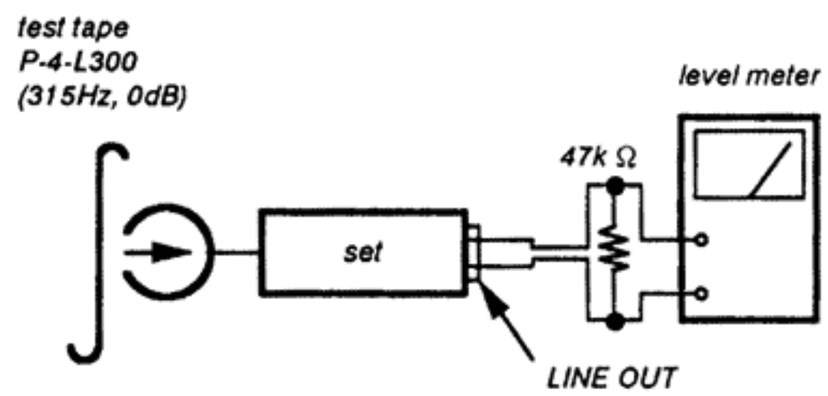

Adjust RV11 (L-CH) and RV21 (R-CH) so the level meter reading becomes the adjustment limits below.

Adjustment Value :

LINE OUT level : − 7.7 ± 0.5dB (0.301 to 0.338V)

Level difference between channels : within 0.5dB

Confirm the LINE OUT level does not change in playback mode while changing the mode from playback to stop several times

Adjustment Location : AUDIO board (Page 9)

Bias Consumption Current Adjustment

This adjustment should be performed when replacing the head assy or the bias oscillating transformer (T81, T91).

Procedure :

− Record Mode −

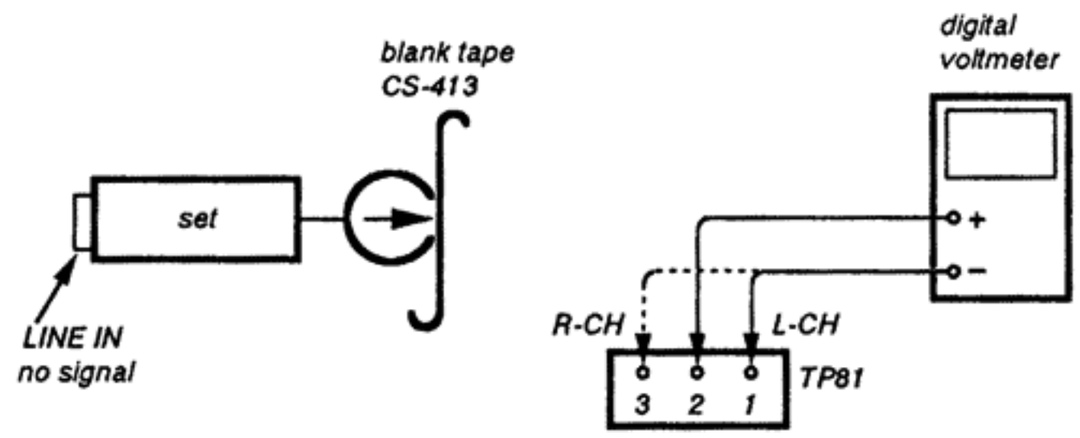

1. Connect the digital voltmeter to test point TP81.
2. Set RV81 (L-CH) and RV91 (R-CH) to mechanical center.
3. Set to record mode.
4. Adjust T81 (L-CH) and T91 (R-CH) so that the digital voltmeter reading becomes minimum.

Adjustment Location : AUDIO board (Page 9)

Record Bias Adjustment

Setting :

REC LEVEL control : standard record position (Refer to page 7)

Procedure :

1. Record Mode

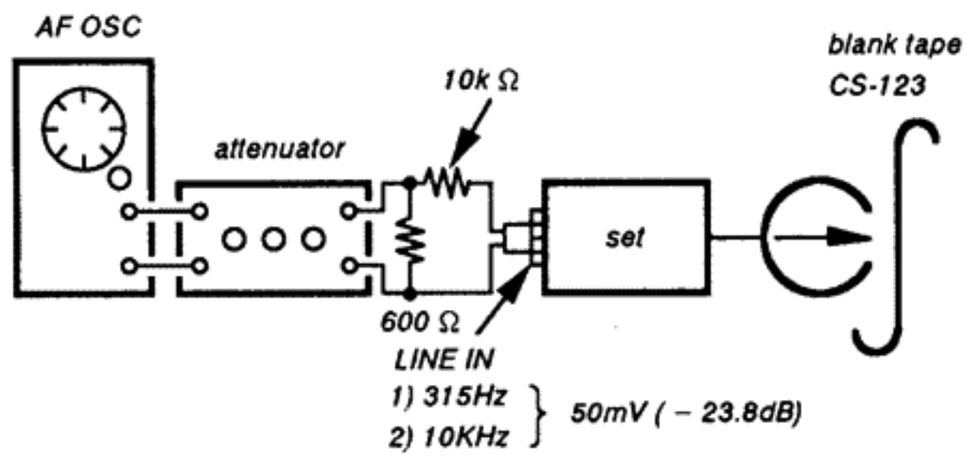

2. Playback Mode

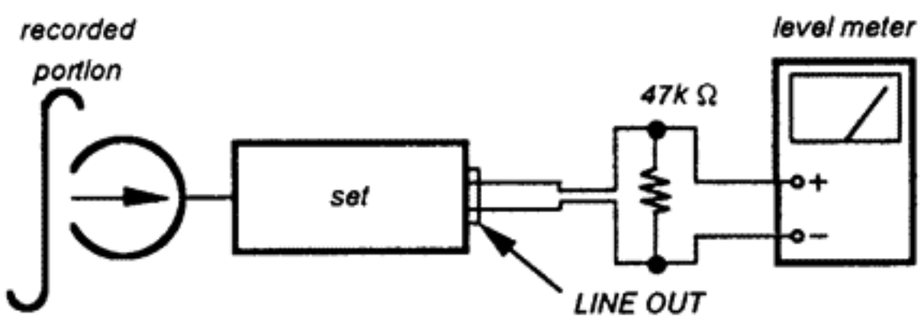

Confirm that the 10kHz playback output is 0 ± 0.5dB relative to the 315Hz output. If necessary, adjust semi-fixed resistor as shown below and repeat the steps gibven above.

TC-KE200 : RV12 (L-CH), RV22 (R-CH)

TC-KE300/KE400S/RX300 : RV81 (L-CH), RV91 (R-CH)

Adjustment Location : AUDIO board

Record Level Adjustment

Setting :

REC LEVEL control : standard record position (Refer to page 7)

Procedure :

1. Record Mode

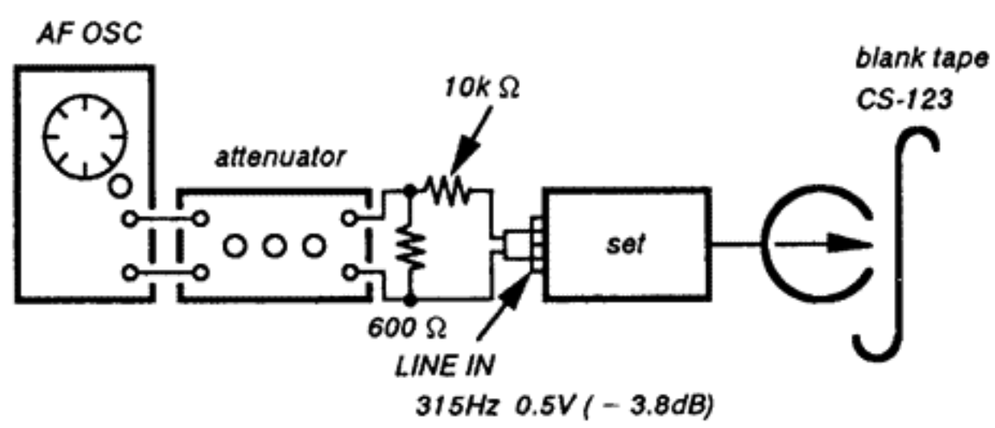

2. Playback Mode

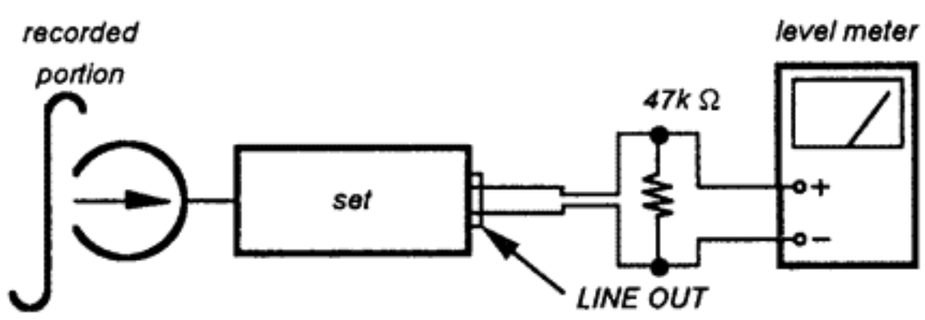

Confirm playback the tape recorded become adjustment level as follows.

If necessary, adjust RV111 (L-CH), RV211 (R-CH) and repeat the steps 1 and 2.

Adjustment Value :

LINE OUT level : − 3.8 ± 0.5dB (0.47 to 0.53V)

Adjustment Location : MAIN board

− Adjustment Parts Location Diagrams −

[MAIN BOARD]

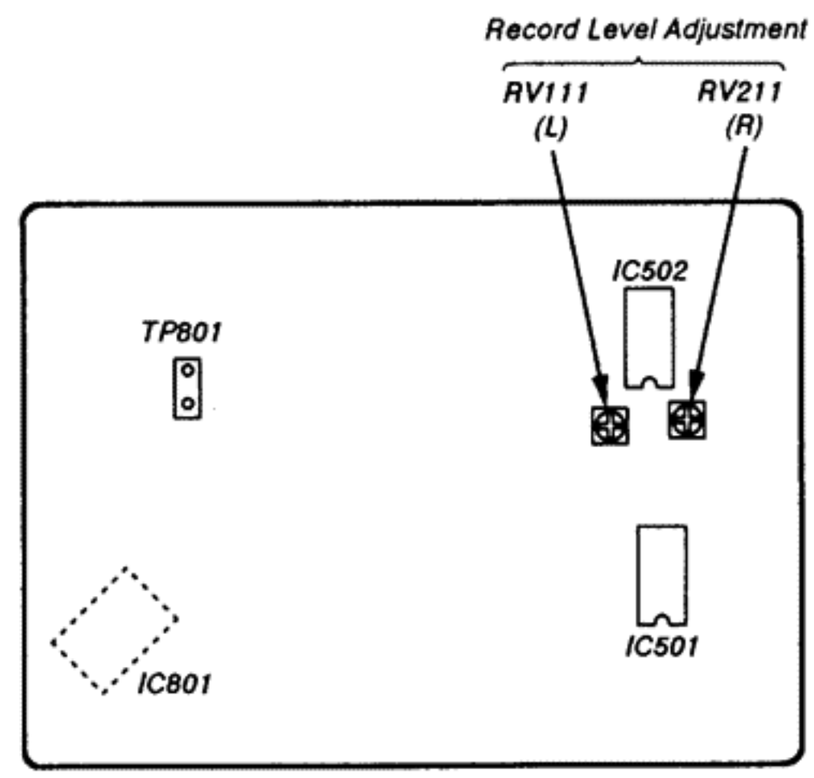

[AUDIO BOARD]

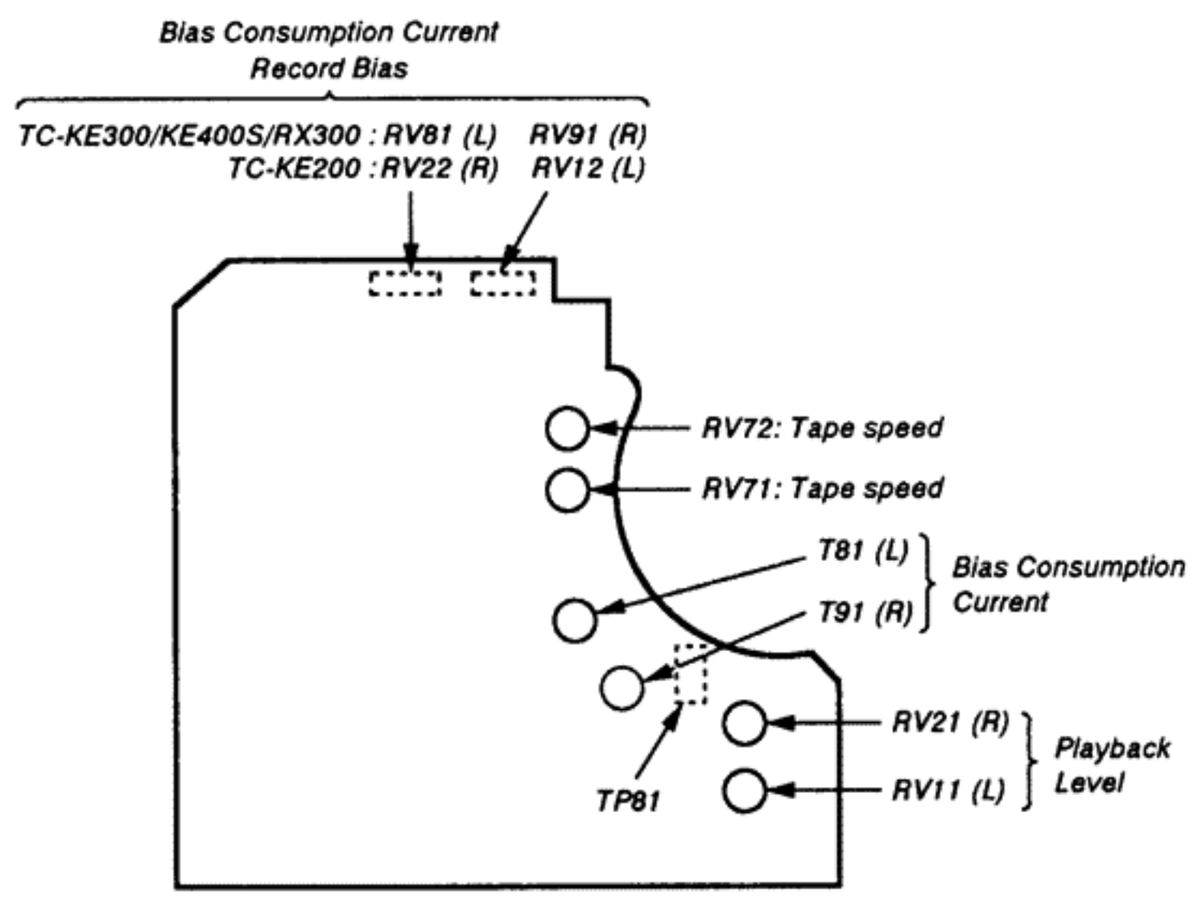

SECTION 4
EXPLANATION OF IC TERMINALS

IC801 CXP82612-022Q (SYSTEM CONTROL)

Pin No.	Pin name	I/O	Description
1	STOP SW	I	Mechanism stop switch input terminal.
2	SIRCS IN	I	SIRCS signal input terminal.
3	VRSION 2	I	Version selector.
4	NC	–	Not used.
5	NC	–	Not used.
6	NC	–	Not used.
7	MPX ON/$\overline{\text{OFF}}$	O	MPX filter ON/OFF control terminal. OFF=L
8	CAL ON/$\overline{\text{OFF}}$	O	Calibration ON/OFF control terminal.
9	REC CAL 0	I	REC calibration terminal.
10	REC CAL 1	O	REC calibration terminal.
11	GP CAL 0	O	GP calibration terminal.
12	GP CAL 1	I	GP calibration terminal.
13	$\overline{\text{LINE MUTE}}$	O	Line mute ON/OFF. 0V=Mute
14	AMS IN	I	AMS signal input terminal.
15	NC	–	Not used.
16	REC MUTE	O	REC out mute terminal.
17	REEL –	O	Reel motor – control terminal.
18	REEL +	O	Reel motor+ control terminal.
19	BIAS	O	Bias ON/OFF.
20	$\overline{\text{RELAY}}$	O	Relay selector terminal.
21	CAL KEY	I	Calibration ON/OFF switch input terminal.
22	METER L	I	Meter level L ch.
23	KEY X	I	Key switch input terminal.
24	KEY Y	I	Key switch input terminal.
25	METER R	I	Meter level R ch.
26	DOLBY AD	I	Dolby OFF/B/C/S select terminal.
27	HALF	I	Half pawl input terminal.
28	METAL CHROM	I	Metal, CrO_2 tape selector terminal. "H" : Metal, CrO_2
29	S. REEL	I	Supply pulse input terminal.
30	RESET	I	Reset terminal.
31	XO	O	System clock input terminal.
32	XI	I	System clock output terminal.
33	V_{SS}	–	Ground.
34	BIAS CAL 0	O	Bias calibration terminal.
35	BIAS CAL 1	O	Bias calibration terminal.
36	BIAS CAL 2	O	Bias calibration terminal.
37	BIAS CAL 3	O	Bias calibration terminal.
38	CAP. M ON/$\overline{\text{OFF}}$	O	Capstan motor ON/OFF terminal.
39	OSC $\overline{\text{H}}$/L	O	OSC H/L control.
40	OSC $\overline{\text{ON}}$/OFF	O	OSC ON/OFF control.

Pin No.	Pin name	I/O	Description
41	BC/$\overline{S}$	O	Dolby B, C/S select terminal.
42	DOLCON	O	Dolby B/C control terminal.
43	$\overline{REC}$/PB	O	Recording/Playback selector for dolby IC.
44	NC	–	Not used.
45	NC	–	Not used.
46	S1	O	Fluorescent indicator tube segment output.
47	S2	O	Fluorescent indicator tube segment output.
48	S3	O	Fluorescent indicator tube segment output.
49	S4	O	Fluorescent indicator tube segment output.
50	S5	O	Fluorescent indicator tube segment output.
51	S6	O	Fluorescent indicator tube segment output.
52	S7	O	Fluorescent indicator tube segment output.
53	S8	O	Fluorescent indicator tube segment output.
54	S9	O	Fluorescent indicator tube segment output.
55	S10	O	Fluorescent indicator tube segment output.
56	S11	O	Fluorescent indicator tube segment output.
57	S12	O	Fluorescent indicator tube segment output.
58	S13	O	Fluorescent indicator tube segment output.
59	S14	O	Fluorescent indicator tube segment output.
60	S15	O	Fluorescent indicator tube segment output.
61	S16	O	Fluorescent indicator tube segment output.
62	S17	O	Fluorescent indicator tube segment output.
63	NC	–	Not used.
64	NC	–	Not used.
65	NC	–	Not used.
66	G5	O	Fluorescent indicator tube grid output.
67	G4	O	Fluorescent indicator tube grid output.
68	G3	O	Fluorescent indicator tube grid output.
69	G2	O	Fluorescent indicator tube grid output.
70	G1	O	Fluorescent indicator tube grid output.
71	V-DISP	–	Fluorescent indicator tube power supply. (– 20V)
72	V_{DD}	–	Power supply. (+5V)
73	NC	–	Not used.
74	NC	–	Not used.
75	V_{DD}	–	Power supply. (+5V)
76	POWER IN	I	0V= Power OFF
77	POWER OUT	O	Power ON/OFF. ON=0V
78	V_{DD}	–	Power supply. (+5V)
79	TEST MODE	I	Test mode selector. 0V= Test mode
80	VERSION 1	I	Version slector.

SECTION 5
DIAGRAMS

• SEMICONDUCTOR LOCATION

Ref. No.	Location	Ref. No.	Location	
D131	D-11	IC511	F-16	
D132	D-11	IC601	B-9	
D231	D-11	IC701	G-10	
D232	D-12	IC801	C-8	
D511	B-13	IC802	E-8	
D512	B-13			
D513	F-13	Q101	B-14	
D551	B-11	Q102	C-14	
D701	H-8	Q121	G-12	
D702	H-8	Q122	D-13	
		Q201	A-14	
D703	G-8			
D704	G-8	Q202	C-16	
D705	G-8	Q221	G-12	
D706	G-8	Q222	E-13	
D707	G-8	Q503	G-14	
		Q504	G-14	
D708	H-9			
D709	H-11	Q505	F-14	
D710	G-9	Q511	C-13	
D711	G-10	Q512	C-13	
D712	F-9	Q521	G-14	
		Q531	C-11	
D713	G-7			
D714	F-9	Q532	C-11	
D715	G-10	Q551	B-11	
D801	E-8	Q572	F-13	
D802	E-8	Q573	D-13	
		Q601	C-10	
IC501	D-15	Q701	H-12	
IC502	G-15	Q702	H-11	
IC503	D-13	Q703	H-9	
IC504	D-11	Q704	H-10	
IC505	D-11	Q705	G-10	
IC506	B-15	Q706	G-9	
IC507	C-13	Q707	F-9	
IC508	B-10	Q708	F-8	
IC509	D-10	Q803	B-7	
IC510	C-12	Q805	E-8	

Note:

- ○— : parts extracted from the component side.
- △ : internal component.
- ▒ : Pattern from the side which enables seeing. (The other layers' patterns are not indicated)

Caution :

Pattern face side : Parts on the pattern face side seen from
(Conductor Side) the pattern face are indicated.
Parts face side : Parts on the parts face side seen from the
(Component side) parts face are indicated.

• Abbreviation
CND : Canadian

5-1. PRINTED WIRING BOARDS – MAIN SECTION – (TC-KE200/KE300/RX300) • Refer to page 28 for Circuit Boards Location.

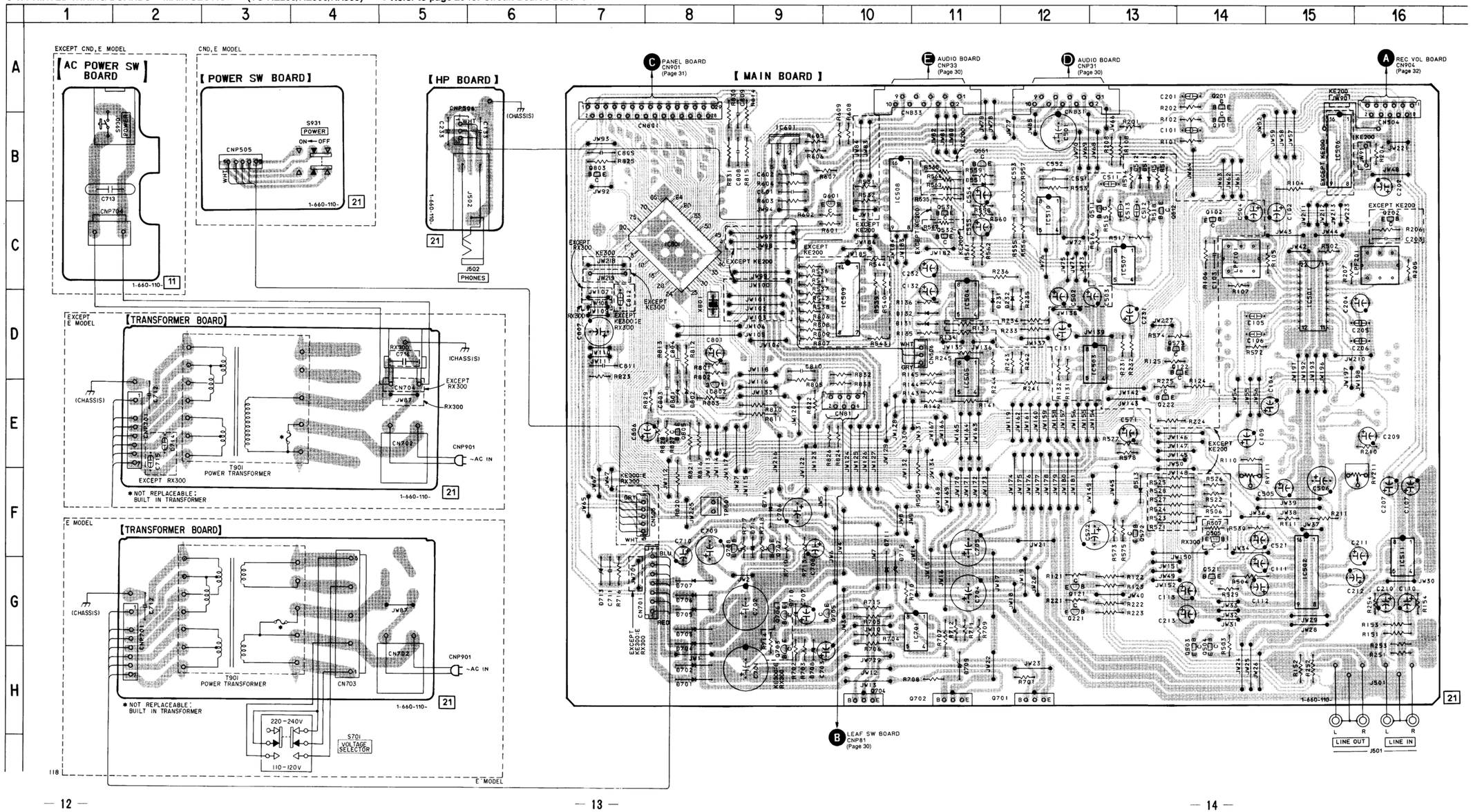

5-2. SCHEMATIC DIAGRAM – MAIN SECTION – (TC-KE200/KE300/RX300)

● Refer to page 28 for IC Block Diagram.

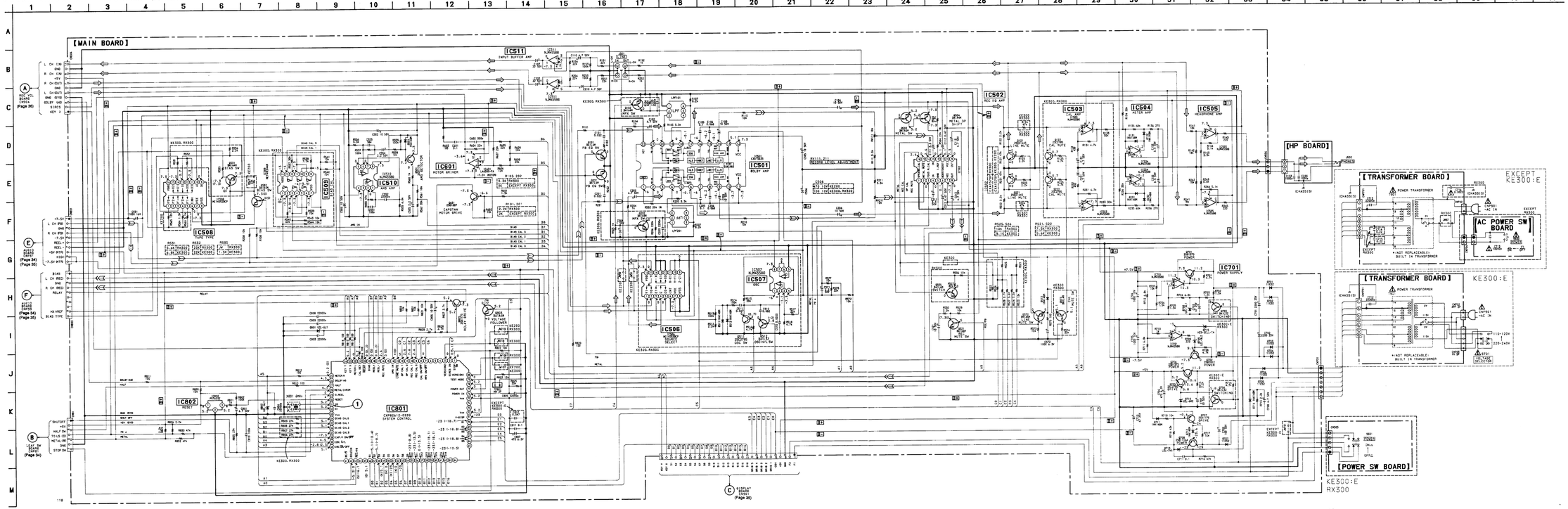

● WAVEFORM

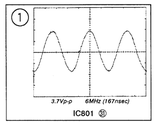

Note :

- All capacitors are in μ F unless otherwise noted. pF: μ μ F 50WV or less are not indicated except for electrolytics and tantalums.
- All resistors are in Ω and ¼W or less unless otherwise specified.
- % : indicates tolerance.
- △ : internal component.
- ▭ : panel designation.
- B+ : B+ Line
- B− : B − Line
- ▭ : adjustment for repair.
- Voltage and waveforms are dc with respect to ground under no-signal conditions.
  no mark : PLAYBACK
  ( ) : REC
  ✱ : can not be measured.
- Voltages are taken with a VOM (Input impedance 10M Ω). Voltage variations may be noted due to normal production tolerances.
- Waveforms are taken with a oscilloscope. Voltage variations may be noted due to normal production tolerances.
- Circled numbers refer to waveforms.
- Signal path.
  ⇨ : LINE
  ⇨ : PB
  ⇨ : REC
- Abbreviation
  GND : Canadian

5-3. SCHEMATIC DIAGRAM – MAIN SECTION – (TC-KE400S) ● Refer to page 28 for IC Block Diagram.

● WAVEFORM

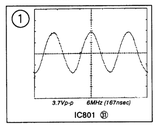

Note :

- All capacitors are in μ F unless otherwise noted. pF: μ μ F 50WV or less are not indicated except for electrolytics and tantaliums.
- All resistors are in Ω and ¼W or less unless otherwise specified.
- % : indicates tolerance.
- △ : internal component.
- ▭ : panel designation.
- B+ : B+ Line
- B− : B − Line
- ▭ : adjustment for repair.
- Voltage and waveforms are dc with respect to ground under no-signal conditions.
  no mark : PLAYBACK
  ( ) : REC
  ＊ : can not be measured.
- Voltages are taken with a VOM (Input impedance 10M Ω). Voltage variations may be noted due to normal production tolerances.
- Waveforms are taken with a oscilloscope. Voltage variations may be noted due to normal production tolerances.
- Circled numbers refer to waveforms.
- Signal path.
  ⇨ : LINE
  ⇦ : PB
  ⇨⇦ : REC

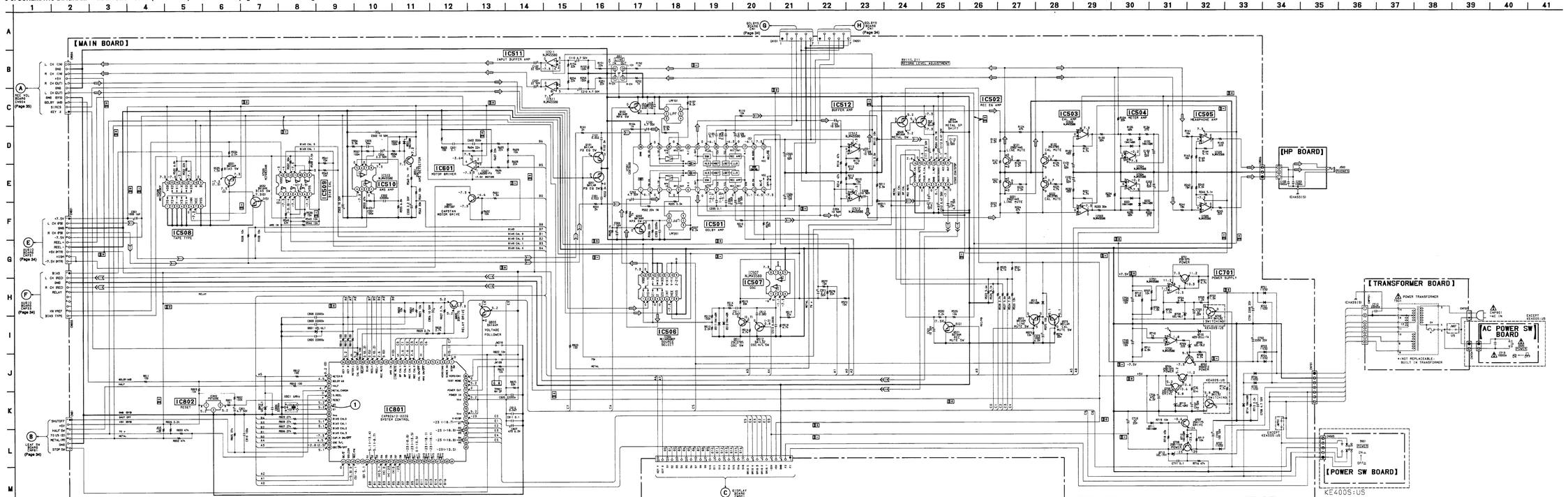

5-4. PRINTED WIRING BOARDS – MAIN SECTION – (TC-KE400S)

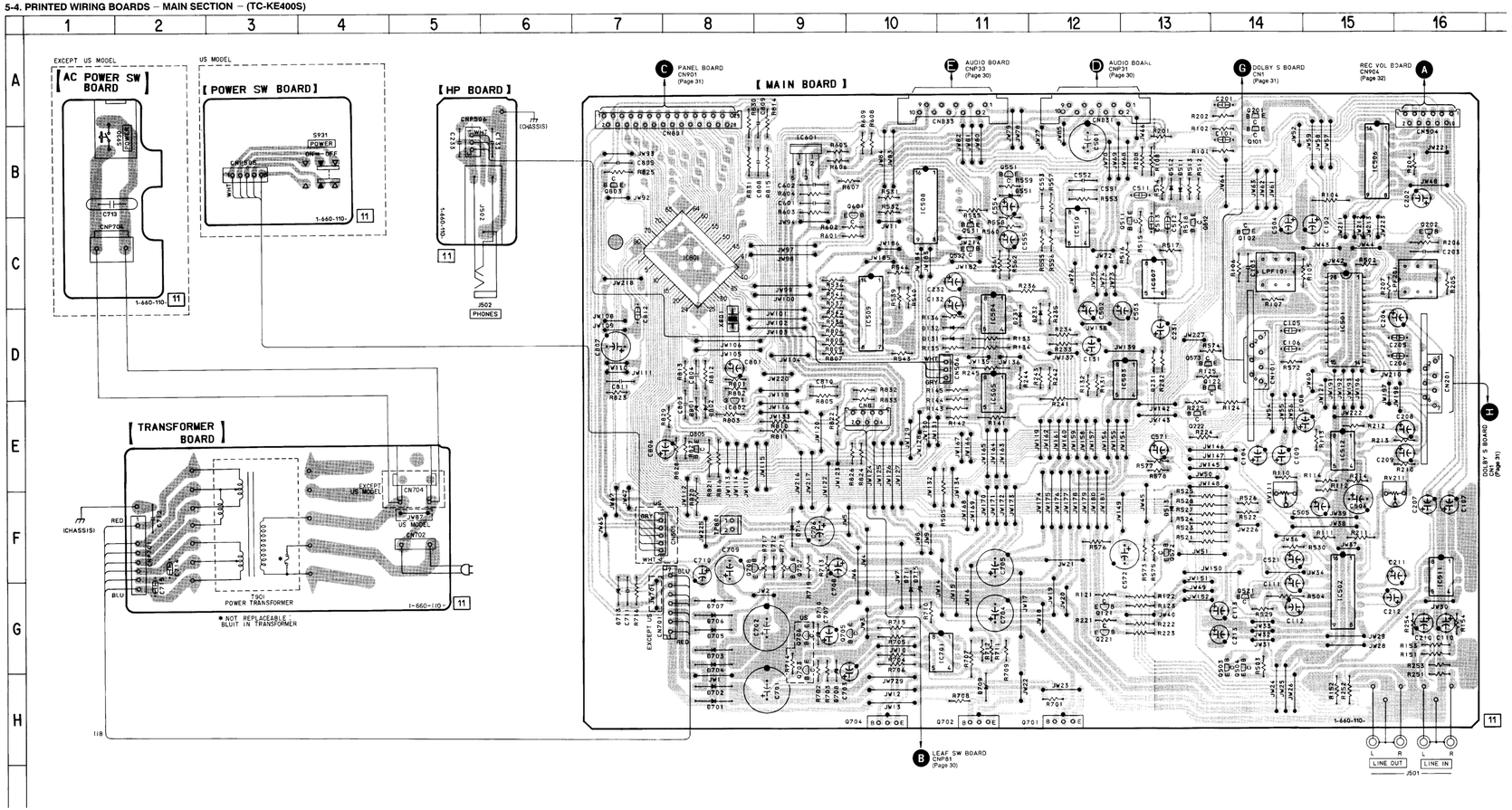

● SEMICONDUCTOR LOCATION

Ref. No.	Location	Ref. No.	Location
D131	D - 11	IC512	E - 15
D132	D - 11	IC601	B - 9
D231	D - 11	IC701	G - 11
D232	D - 12	IC801	C - 8
D511	B - 13	IC802	E - 8
D512	B - 13		
D513	F - 13	Q101	B - 14
D551	B - 11	Q102	C - 14
D701	H - 8	Q121	G - 12
D702	H - 8	Q122	D - 13
		Q201	A - 14
D703	G - 8		
D704	G - 8	Q202	C - 16
D705	G - 8	Q221	G - 12
D706	G - 8	Q222	E - 13
D707	G - 8	Q503	G - 14
		Q504	G - 14
D708	H - 9		
D709	H - 11	Q505	
D710	G - 9	Q511	C - 13
D711	G - 10	Q512	C - 13
D712	F - 9	Q521	G - 14
		Q531	C - 11
D713	G - 7		
D714	F - 9	Q532	C - 11
D715	G - 10	Q551	B - 11
D801	E - 8	Q572	F - 13
D802	E - 8	Q573	D - 13
		Q601	B - 10
IC501	D - 15	Q701	H - 12
IC502	G - 15	Q702	H - 11
IC503	D - 13	Q703	G - 9
IC504	D - 11	Q704	H - 10
IC505	D - 11	Q705	G - 10
IC506	B - 15	Q706	G - 9
IC507	C - 13	Q707	F - 9
IC508	B - 10	Q708	F - 8
IC509	D - 10	Q803	B - 7
IC510	C - 12	Q805	E - 8
IC511	F - 16		

Note:

- ○— : parts extracted from the component side.
- △ : internal component.
- ▒ : Pattern from the side which enables seeing. (The other layers' patterns are not indicated)

Caution :

Pattern face side : (Conductor Side) Parts on the pattern face side seen from the pattern face are indicated.
Parts face side : (Component side) Parts on the parts face side seen from the parts face are indicated.

5-5. CIRCUIT BOARDS LOCATION

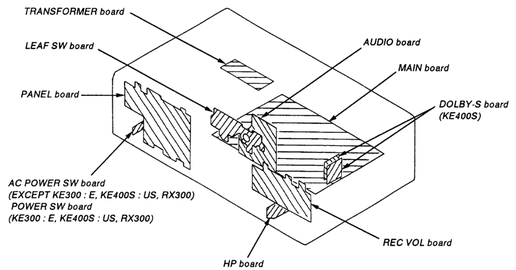

● IC BLOCK DIAGRAM

IC502 CXA1579P (EXCEPT TC-RX300)
IC502 CXA1578P (TC-RX300 only)

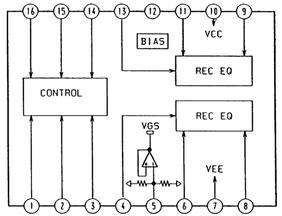

5-6. PRINTED WIRING BOARDS – AUDIO SECTION –

• SEMICONDUCTOR LOCATION

Ref. No.	Location
D31	H - 1
IC1	I - 2
IC81	H - 7 (LEAF SW BOARD)
Q51	H - 2
Q52	G - 2
Q53	H - 2
Q71	H - 3

• SEMICONDUCTOR LOCATION

Ref. No.	Location
D31	C - 1
IC1	G - 16 (KE400S)
IC31	C - 2
IC81	B - 3 (AUDIO BOARD)
IC81	H - 7 (LEAF SW BOARD)
IC901	B - 23 (KE400S)
IC901	G - 23 (KE200/KE300/RX300)
Q51	B - 2
Q52	B - 2
Q53	B - 1
Q71	C - 3

Note:

- O— : parts extracted from the component side.
- ▒▒▒ : Pattern from the side which enables seeing. (The other layers' patterns are not indicated)

Caution :

Pattern face side : (Conductor Side) Parts on the pattern face side seen from the pattern face are indicated.
Parts face side : (Component side) Parts on the parts face side seen from the parts face are indicated.

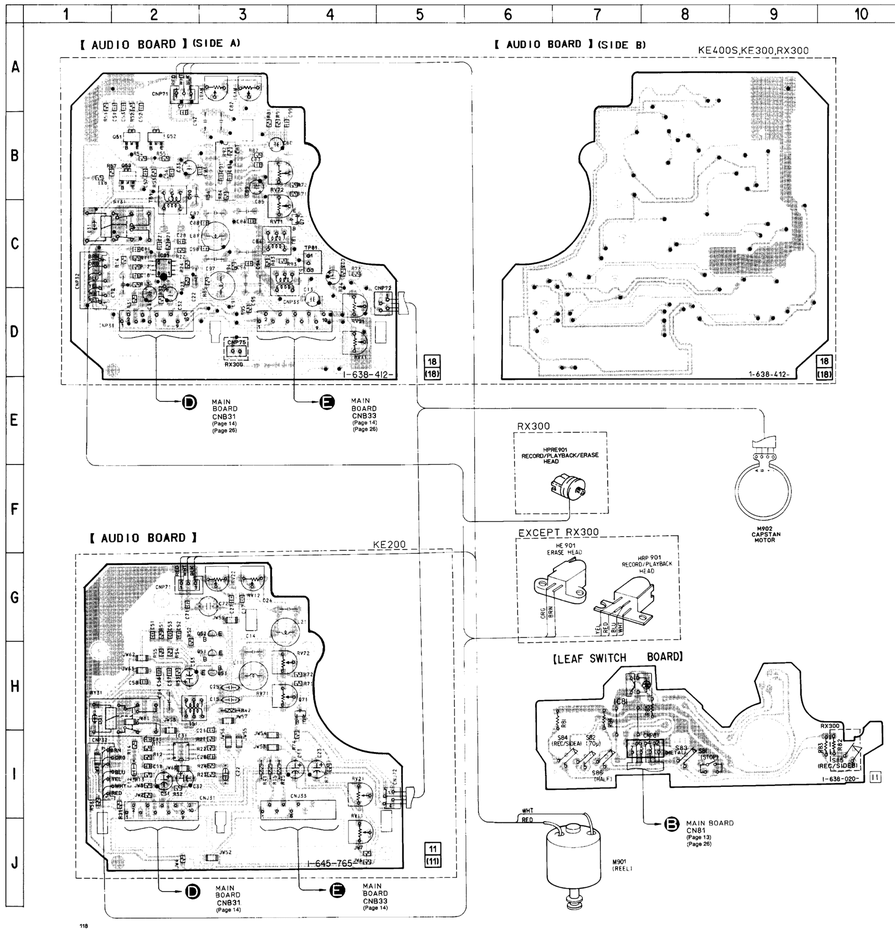

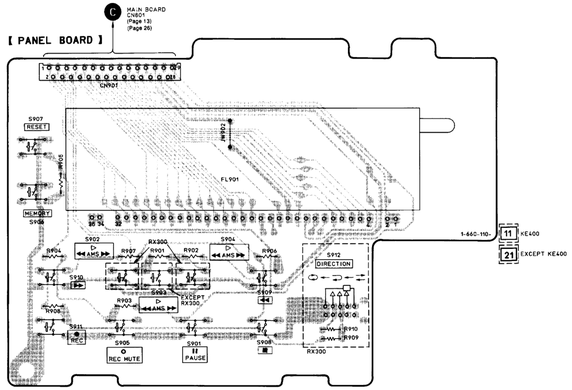

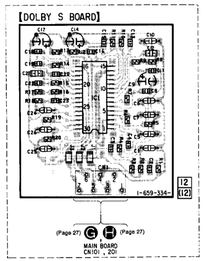

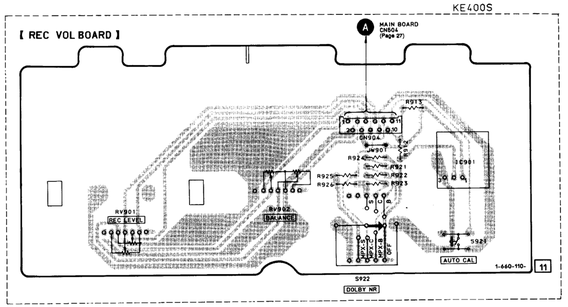

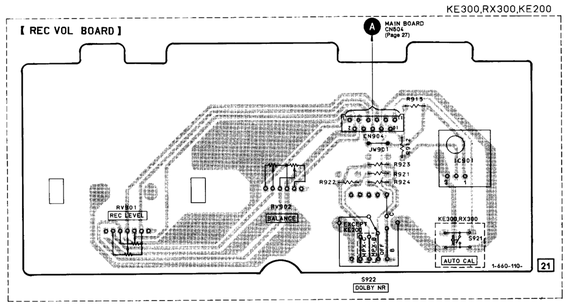

5-7. SCHEMATIC DIAGRAM – AUDIO SECTION –

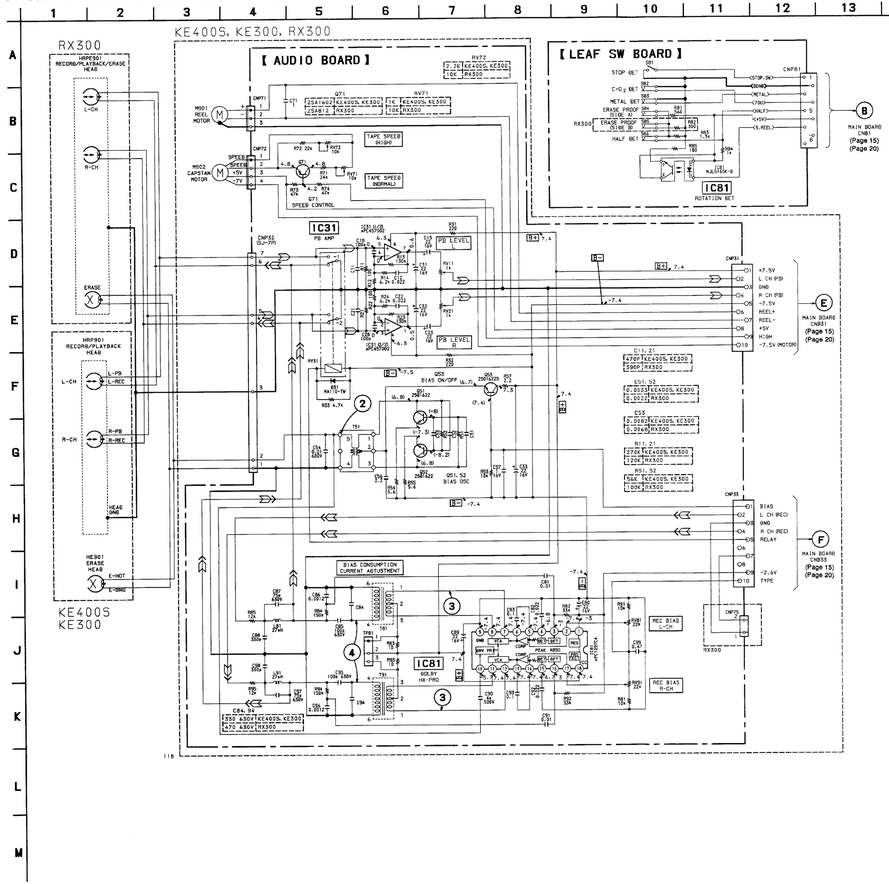

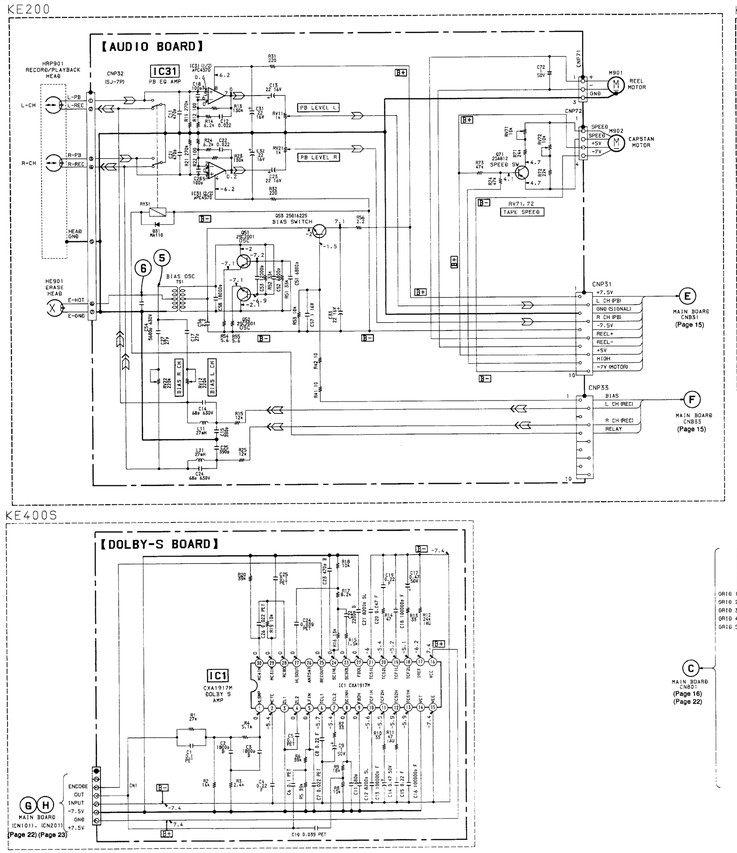

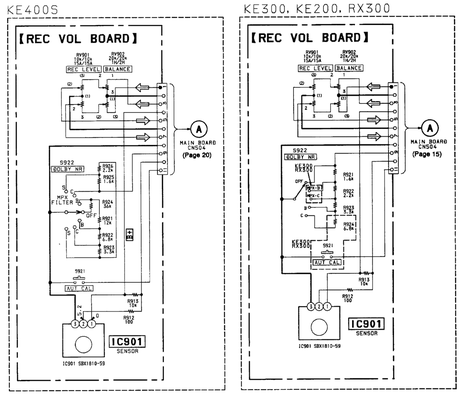

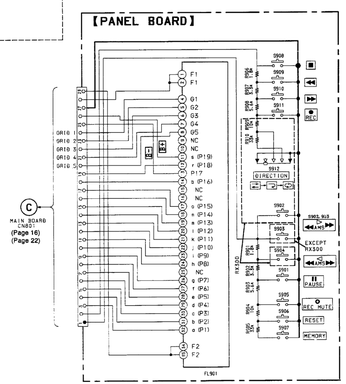

● WAVEFORMS

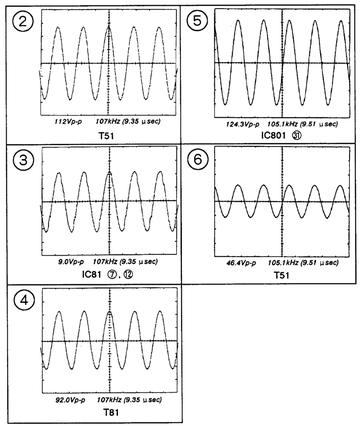

Note :

- All capacitors are in μ F unless otherwise noted. pF: μ μ F 50WV or less are not indicated except for electrolytics and tantalums.
- All resistors are in Ω and ¼W or less unless otherwise specified.
- ▭ : panel designation.

Note :	Note :
The components identified by mark ⚠ or dotted line with mark ⚠ are critical for safety. Replace only with part number specified.	Les composants identifiés par une marque ⚠ sont critiques pour la sécurité. Ne les remplacer que par une pièce portant le numéro spécifié.

- B+ : B+ Line
- B− : B − Line
- ▭ : adjustment for repair.
- Voltage and waveforms are dc with respect to ground under no-signal conditions.
- Voltages are taken with a VOM (Input impedance 10M Ω). Voltage variations may be noted due to normal production tolerances.
- Waveforms are taken with a oscilloscope. Voltage variations may be noted due to normal production tolerances.
- Circled numbers refer to waveforms.
- Signal path.
  ▷ : PB
  ▷▷ : REC

SECTION 6
EXPLODED VIEWS

NOTE :

- -XX, -X mean standardized parts, so they may have some difference from the original one.
- Items marked " * "are not stocked since they are seldom required for routine service. Some delay should be anticipated when ordering these items.
- Color indication of Appearance Parts
  Example :
  KNOB, BALANCE (WHITE) ••• (RED)
  ↑ Parts color ↑ Cabinet's color

- The mechanical parts with no reference number in the exploded views are not supplied.
- Hardware (# mark) list and accessories and packing materials are given in the last of this parts list.
- Abbreviation

CND	: Canadian	SP	: Singapore
AUS	: Australian	MY	: Malaysia
G	: German		

The components identified by mark ⚠ or dotted line with mark ⚠ are critical for safety.
Replace only with part number specified.

Les composants identifiés par une marque ⚠ sont critiques pour la sécurité.
Ne les remplacer que par une pièce portant le numéro spécifié.

6-1. CHASSIS SECTION

▲A :TRANS board

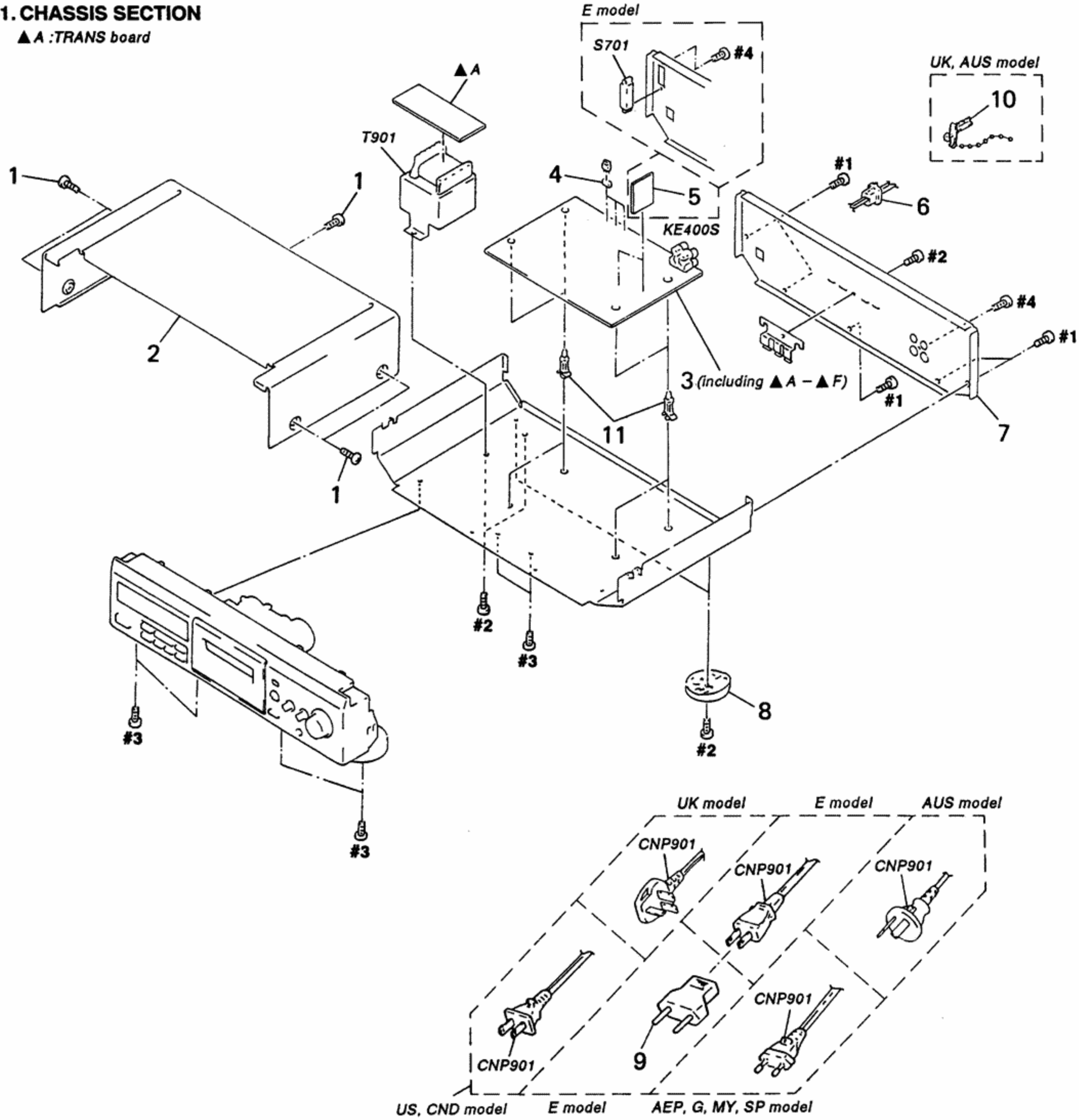

Ref. No.	Part No.	Description	Remark
1	3-704-366-01	SCREW (CASE) (M3X8)...(BLACK)	
1	3-704-366-71	SCREW (CASE) (M3X8)...(SILVER) (KE400S)	
* 2	3-931-432-01	CASE (410726)...(BLACK)	
* 2	3-931-432-21	CASE (410726)...(SILVER) (KE400S)	
* 3	A-2007-523-A	MAIN BOARD, COMPLETE (KE200)	
* 3	A-2007-524-A	MAIN BOARD, COMPLETE (KE400S:EXCEPT US)	
* 3	A-2007-525-A	MAIN BOARD, COMPLETE (KE400S:US)	
* 3	A-2007-526-A	MAIN BOARD, COMPLETE (KE300:EXCEPT E)	
* 3	A-2007-527-A	MAIN BOARD, COMPLETE (KE300:E)	
* 3	A-2007-591-A	MAIN BOARD, COMPLETE (RX300)	
* 4	3-923-762-11	HOLDER (TR)	
* 5	A-2007-481-A	DOLBY-S BOARD, COMPLETE (KE400S)	
* 6	3-703-244-00	BUSHING (2104), CORD (EXCEPT US,E,CND)	
6	3-703-571-11	BUSHING (S) (4516), CORD (US,E,CND)	
* 7	3-933-281-01	PANEL, BACK (KE400S:US)	
* 7	3-933-281-12	PANEL, BACK (KE400S:AEP,G)	
* 7	3-933-281-21	PANEL, BACK (KE400S:UK)	
* 7	3-933-281-31	PANEL, BACK (KE400S:AUS)	
* 7	3-933-281-41	PANEL, BACK (KE300:AEP,G,MY,SP)	
* 7	3-933-281-51	PANEL, BACK (KE300:AUS)	
* 7	3-933-281-61	PANEL, BACK (KE300:E)	
* 7	3-933-281-81	PANEL, BACK (RX300)	

Ref. No.	Part No.	Description	Remark
* 7	3-933-307-01	PANEL, BACK (KE200:AEP,G)	
* 7	3-933-307-11	PANEL, BACK (KE200:UK)	
8	X-4947-207-1	FOOT ASSY (F50150S) (EXCEPT US,CND)	
8	X-4947-208-1	FOOT ASSY (F50150S) (US,CND)	
⚠9	1-569-007-11	ADAPTER, CONVERSION 2P (E)	
10	4-956-370-12	BAND, PLUG FIXED (UK,AUS)	
* 11	3-346-265-31	HOLDER, PC BOARD	
⚠CNP901	1-558-945-21	CORD, POWER (POLAR.SPT-1) (US,CND)	
⚠CNP901	1-575-651-21	CORD, POWER (AEP,G,MY,SP)	
⚠CNP901	1-696-027-11	CORD, POWER (E)	
⚠CNP901	1-696-586-11	CORD, POWER (UK)	
⚠CNP901	1-696-845-11	CORD, POWER (AUS)	
⚠CNP901	1-751-523-11	CORD, POWER (UK)	
⚠S701	1-570-046-21	SWITCH, VOLTAGE CHANGE (E)	
⚠T901	1-426-651-11	TRANSFORMER, POWER	(KE200,KE300:EXCEPT E)
⚠T901	1-426-652-11	TRANSFORMER, POWER (KE300:E)	
⚠T901	1-427-743-11	TRANSFORMER, POWER (RX300)	
⚠T901	1-427-751-11	TRANSFORMER, POWER (KE400S:EXCEPT US)	
⚠T901	1-427-752-11	TRANSFORMER, POWER (KE400S:US)	

6-2. FRONT PANEL SECTION

▲B : PANEL board
▲C : POWER SW board (US, CND, E)
▲D : REC VOL board
▲E : HP board
▲F : AC POWER SW board (EXCEPT US, CND, E)

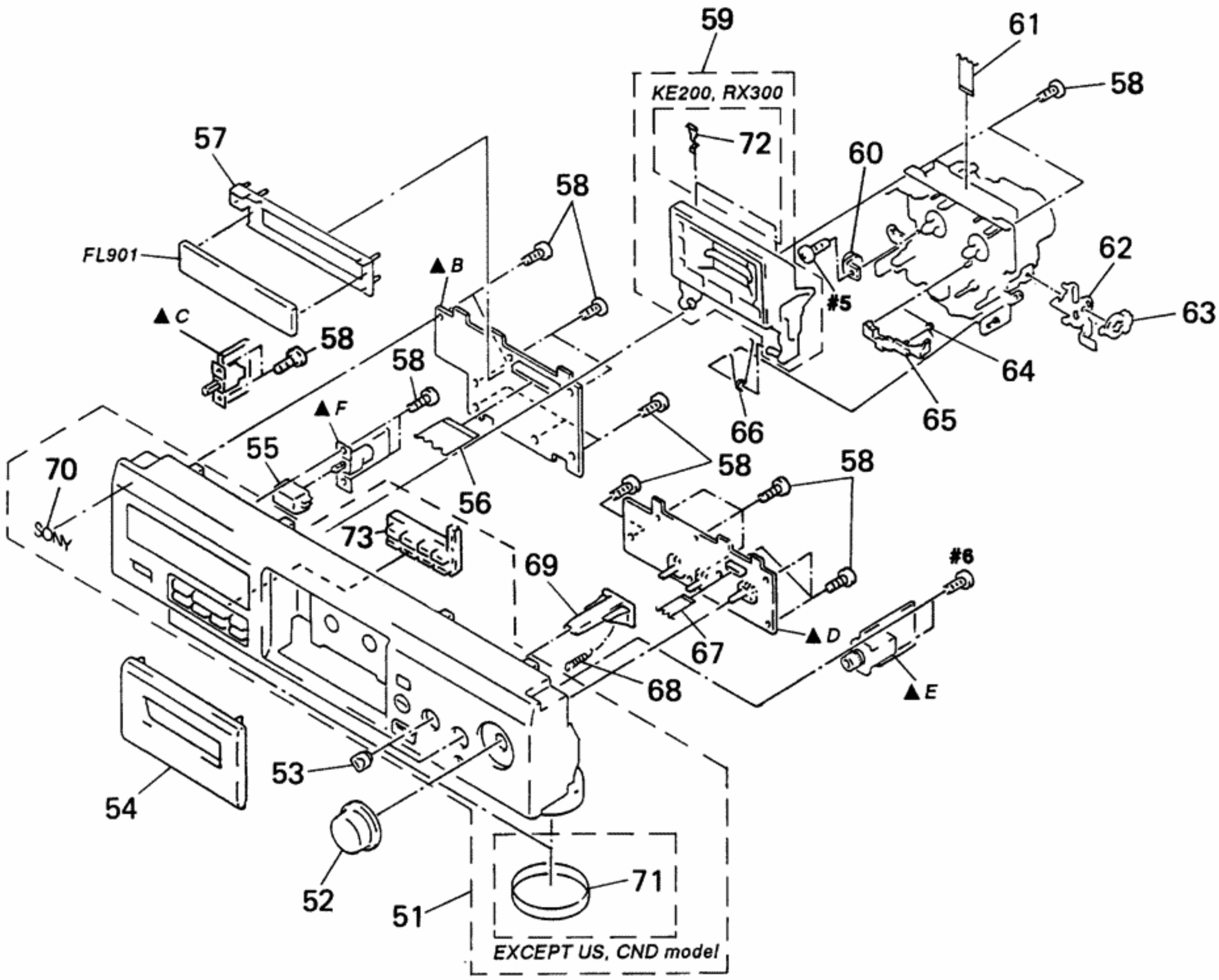

Ref. No.	Part No.	Description	Remark
51	X-3371-687-1	PANEL ASSY, FRONT...(SILVER) (KE400S)	
51	X-3371-687-2	PANEL ASSY, FRONT...(BLACK) (KE400S: EXCEPT US)	
51	X-3371-688-2	PANEL ASSY, FRONT...(BLACK) (KE300)	
51	X-3371-690-2	PANEL ASSY, FRONT...(BLACK) (KE200)	
51	X-3371-694-2	PANEL ASSY, FRONT...(BLACK) (KE400S: US)	
51	X-3371-696-2	PANEL ASSY, FRONT...(BLACK) (RX300)	
52	3-939-300-11	KNOB (REC)...(BLACK)	
52	3-939-300-21	KNOB (REC)...(SILVER) (KE400S)	
53	3-933-299-01	KNOB (DIA. 12)...(BLACK)	
53	3-933-299-11	KNOB (DIA. 12)...(SILVER) (KE400S)	
54	X-3371-686-1	LID ASSY, CASSETTE...(SILVER) (KE400S)	
54	X-3371-691-2	LID ASSY, CASSETTE...(BLACK) (KE400S,KE300)	
54	X-3371-692-2	LID ASSY, CASSETTE...(BLACK) (RX300)	
54	X-3371-693-2	LID ASSY, CASSETTE...(BLACK) (KE200)	
55	3-931-429-01	BUTTON (POWER)	
56	1-773-287-11	WIRE (FLAT TYPE) (29 CORE)	
* 57	3-377-337-11	HOLDER (FL)	
58	4-951-620-01	SCREW (2.6X8), +BVTP	
59	A-4325-164-A	HOLDER (R) ASSY, CASSETTE (KE200,RX300)	
59	X-3368-119-1	HOLDER (R) ASSY, CASSETTE (KE300,KE400S)	
60	3-354-963-01	DAMPER	

Ref. No.	Part No.	Description	Remark
61	1-765-318-11	WIRE (FLAT TYPE) (7 CORE)	
* 62	3-354-954-01	LEVER (LOCK LEVER R)	
63	3-354-957-01	JOINT (LOCK LEVER)	
64	3-354-962-01	SPRING (EJ SAFTY SPRING R)	
65	3-354-956-01	LEVER (EJ SAFTY LEVER R)	
66	3-354-960-01	SPRING (LOADING R), TORSION	
67	1-769-947-11	WIRE (FLAT TYPE) (11 CORE)	
68	3-937-169-01	SPRING, TENSION	
69	3-933-295-01	BUTTON (EJECT)	
70	4-963-404-21	EMBLEM (5-A), SONY	
71	4-977-593-11	RING (DIA 50), ORNAMENTAL (EXCEPT US,CND)	
72	3-308-823-11	DETENT, CASSETTE (KE200,RX300)	
73	3-933-293-01	BUTTON (FWD) (EXCEPT RX300)	
73	3-933-294-01	BUTTON (REV) (RX300)	
FL901	1-517-173-11	INDICATOR TUBE, FLUORESCENT (KE200,KE300,RX300)	
FL901	1-517-374-11	INDICATOR TUBE, FLUORESCENT (KE400S)	

6-3. MECHANISM SECTION 1
TC-KE200 : TCM-190VB22CS
TC-KE300/KE400S : TCM-190VB12CS
TC-RX300 : TCM-190RB12C

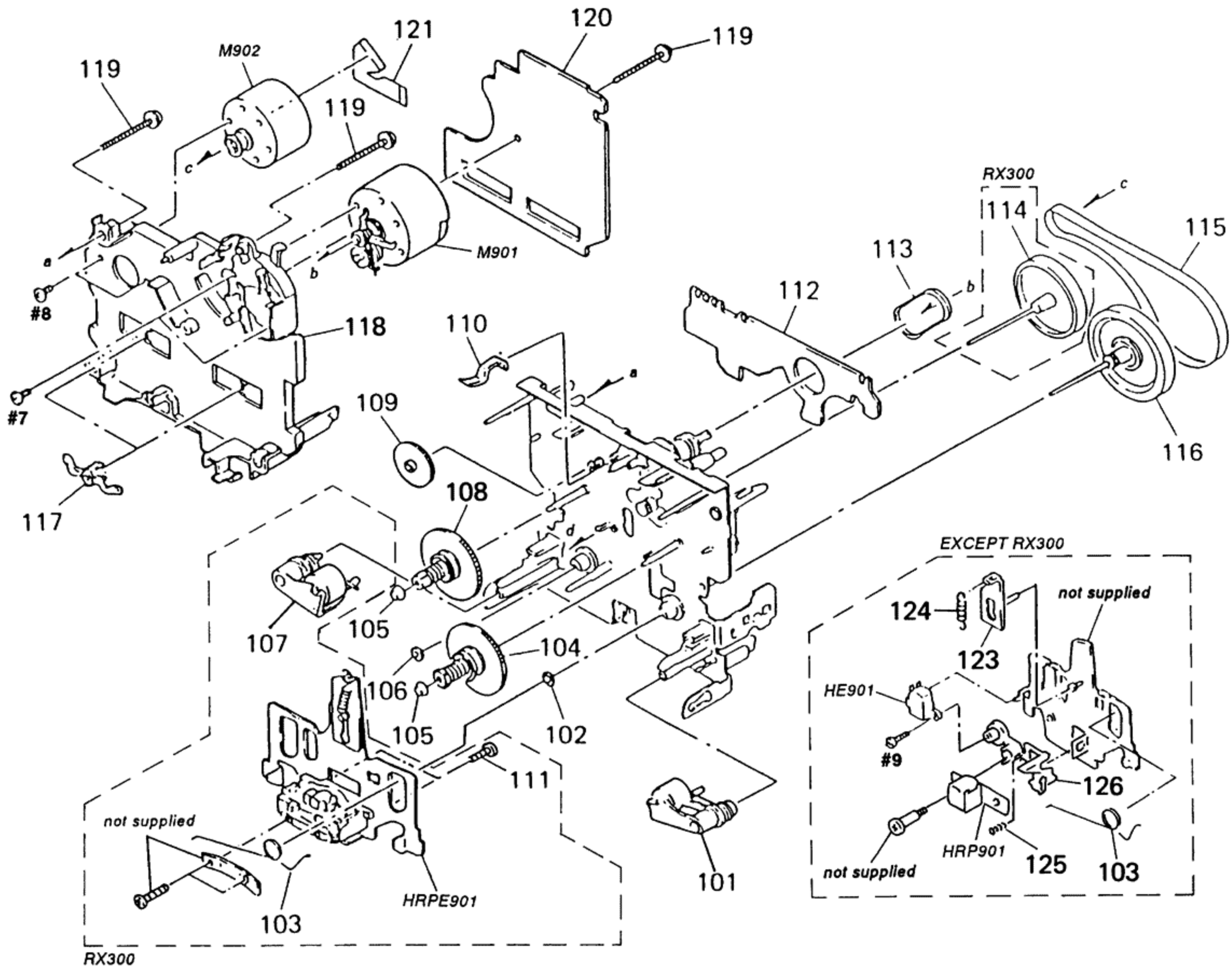

Ref. No.	Part No.	Description	Remark
101	X-3366-047-1	LEVER (PINCH F) ASSY	
102	3-356-713-01	WASHER	
103	3-907-362-01	SPRING, TORSION	
104	X-3366-970-1	TABLE ASSY, REEL	
105	3-362-308-01	CAP (REEL)	
106	3-356-714-01	WASHER (RX300)	
107	X-3366-048-1	LEVER (PINCH R) ASSY (RX300)	
108	X-3366-971-1	TABLE ASSY (B), REEL	
109	3-359-424-01	GEAR (REV GEAR)	
110	3-359-430-01	SPRING(CASSETTE RETAINER),LEAF	
111	3-388-848-01	SCREW (P2X6) (B TIGHT)(RX300)	
* 112	1-638-020-11	LEAF SW BOARD	
113	3-359-466-01	BELT (FR), SQUARE	
114	X-3367-630-1	FLYWHEEL (REV) ASSY (RX300)	
115	3-359-417-01	BELT (FLAT), CAPSTAN (RX300)	
115	3-359-467-01	BELT (1 WAY FLAT BELT) (EXCEPT RX300)	
116	X-3367-629-1	FLYWHEEL (1WD) ASSY	
117	3-575-321-00	RETAINER, THRUST, CAPSTAN	

Ref. No.	Part No.	Description	Remark
118	3-359-436-11	BASE (THRUST RETAINER),FITTING	
119	3-359-414-01	SCREW (+PTPWH 2X23)	
* 120	A-2006-890-A	AUDIO BOARD, COMPLETE (KE400S,KE300)	
* 120	A-2007-040-A	AUDIO BOARD, COMPLETE (RX300)	
* 120	A-2007-171-A	AUDIO BOARD, COMPLETE (KE200)	
121	1-638-983-11	MOTOR FLEXIBLE BOARD	
* 123	X-3368-865-1	SLIDER (LIMITER) ASSY (EXCEPT RX300)	
124	3-363-868-01	SPRING (HEAD CHASSIS), TENSION	(EXCEPT RX300)
125	3-343-484-01	SPRING, COMPRESSION (EXCEPT RX300)	
* 126	3-359-445-11	HOLDER (1 WAY HEAD)(EXCEPT RX300)	
HE901	1-543-673-11	HEAD, MAGNETIC (ERASE)(EXCEPT RX300)	
HRP901	1-543-919-11	HEAD,MAGNETIC(RECORD/PLAYBACK)	(EXCEPT RX300)
HRPE901	A-2004-527-A	DECK ASSY, HEAD (RECORD/PLAYBACK/ERASE)	(RX300)
M901	X-3363-501-1	MOTOR ASSY,REEL (REEL)	
M902	X-3365-377-2	MOTOR ASSY,CAPSTAN (CAPSTAN)	

6-4. MECHANISM SECTION 2
TC-KE200 : TCM-190VB22CS
TC-KE300/KE400S : TCM-190VB12CS
TC-RX300 : TCM-190RB12C

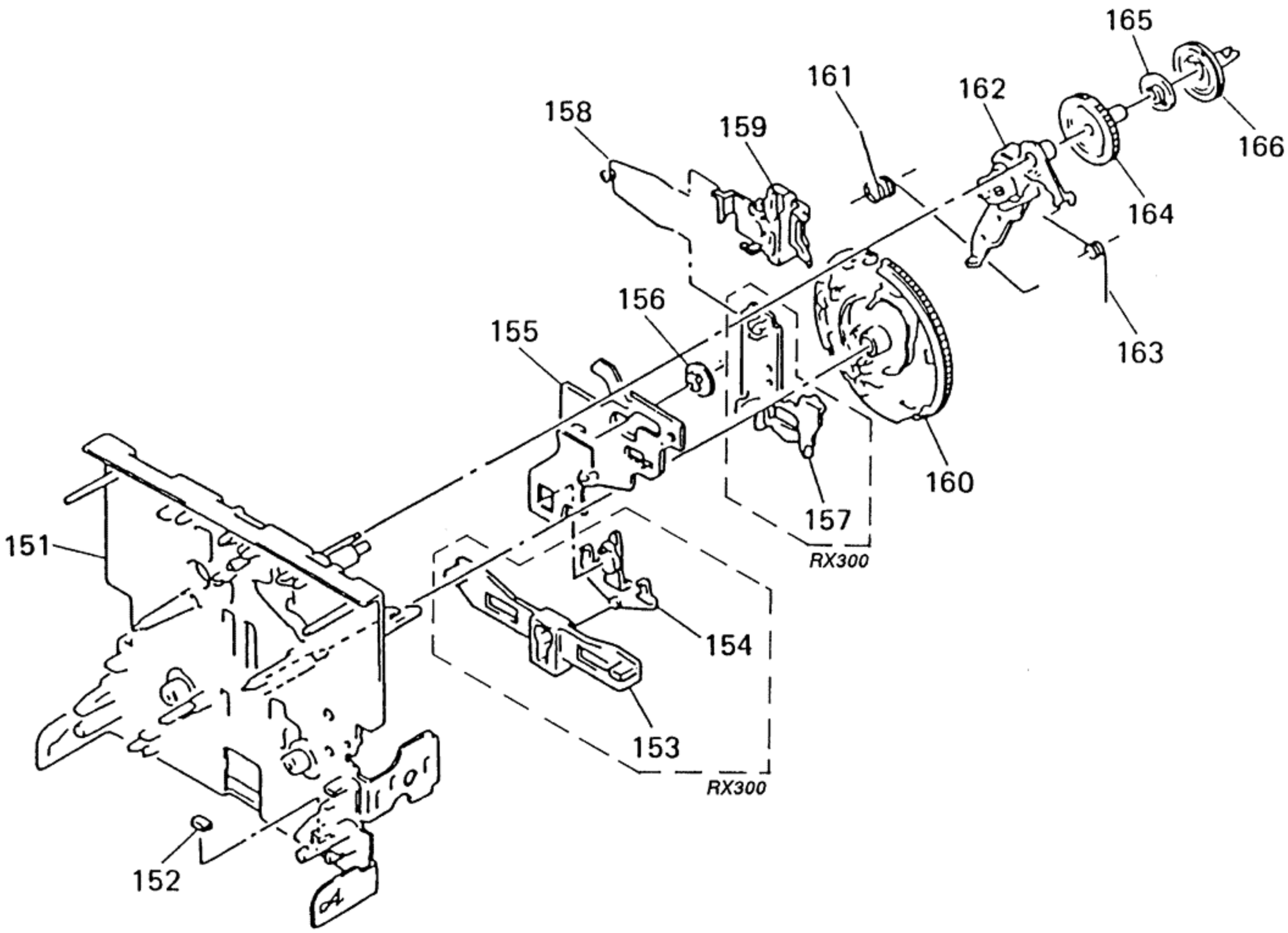

Ref. No.	Part No.	Description	Remark
151	X-3359-415-1	CHASSIS ASSY, MECHANICAL	
152	3-359-469-01	SPACER	
153	3-359-425-01	SLIDER (REVERSE SLIDER)(RX300)	
154	3-359-426-01	LEVER (REVERSE LEVER)(RX300)	
* 155	3-359-415-01	SLIDER (TRIGGER SLIDER)	
156	3-359-448-01	GEAR (TRIGGER)	
157	3-359-427-01	SLIDER (LEVERSE SLIDER)(RX300)	
158	3-359-454-01	SPRING, TORSION	
159	3-359-429-01	SLIDER (BRAKE PLATE)	

Ref. No.	Part No.	Description	Remark
160	3-359-420-01	GEAR (CAM GEAR)(KE200)	
160	3-936-483-01	GEAR (CAM GEAR)(EXCEPT KE200)	
161	3-359-456-01	SPRING(TRIGGER SPRING),TORSION	
162	X-3366-569-1	ARM ASSY, FR	
163	3-924,187-11	S+RING (FR ARM), TORSION	
164	3-359-419-11	GEAR (FR GEAR)	
165	3-359-421-01	CLUTCH (REEL DISK)	
166	3-359-418-01	PULLEY (FR PULLEY)	

AUDIO

SECTION 7
ELECTRICAL PARTS LIST

NOTE:

- Due to standardization, replacements in the parts list may be different from the parts specified in the diagrams or the components used on the set.
- -XX, -X mean standardized parts, so they may have some difference from the original one.
- RESISTORS
  All resistors are in ohms
  METAL : Metal-film resistor
  METAL OXIDE :Metal oxide-film resistor
  F : nonflammable
- Items marked " * "are not stocked since they are seldom required for routine service. Some delay should be anticipated when ordering these items.

- SEMICONDUCTORS
  In each case, u : μ , for example :
  uA.... : μ A.... , uPA.... : μ PA....
  uPB.... : μ PB.... , uPC.... : μ PC....
  uPD.... : μ PD....
- CAPACITORS
  uF : μ F
- COILS
  uH : μ H
- Abbreviation
  CND : Canadian SP : Singapore
  AUS : Australian MY : Malaysia
  G : German

The components identified by mark ⚠ or dotted line with mark ⚠ are critical for safety.
Replace only with part number specified.

Les composants identifiés par une marque ⚠ sont critiques pour la sécurité.
Ne les remplacer que par une pièce portant le numéro spécifié.

When indicating parts by reference number, please include the board.

Ref. No.	Part No.	Description			Remark
*	A-2006-890-A	AUDIO BOARD, COMPLETE (KE300,KE400S)			
*	A-2007-040-A	AUDIO BOARD, COMPLETE (RX300)			
*	A-2007-171-A	AUDIO BOARD, COMPLETE (KE200)			
		**********			
		< CAPACITOR >			
C11	1-163-133-00	CERAMIC CHIP	470PF	5%	50V (KE200,KE300,KE400S)
C11	1-163-131-00	CERAMIC CHIP	390PF	5%	50V (RX300)
C12	1-136-157-00	FILM	0.022uF	5%	50V
C13	1-124-234-00	ELECT	22uF	20%	16V
C14	1-136-272-00	FILM	68PF	5%	630V (KE200)
C15	1-102-113-00	CERAMIC	390PF	10%	50V (KE200)
C17	1-163-237-11	CERAMIC CHIP	27PF	5%	50V (KE200)
C18	1-163-251-11	CERAMIC CHIP	100PF	5%	50V
C21	1-163-133-00	CERAMIC CHIP	470PF	5%	50V (KE200,KE300,KE400S)
C21	1-163-131-00	CERAMIC CHIP	390PF	5%	50V (RX300)
C22	1-136-157-00	FILM	0.022uF	5%	50V
C23	1-124-234-00	ELECT	22uF	20%	16V
C24	1-136-272-00	FILM	68PF	5%	630V (KE200)
C25	1-102-113-00	CERAMIC	390PF	10%	50V (KE200)
C27	1-163-237-11	CERAMIC CHIP	27PF	5%	50V (KE200)
C28	1-163-251-11	CERAMIC CHIP	100PF	5%	50V
C31	1-124-234-00	ELECT	22uF	20%	16V
C32	1-124-234-00	ELECT	22uF	20%	16V
C33	1-124-234-00	ELECT	22uF	20%	16V
C51	1-164-182-11	CERAMIC CHIP	0.0033uF	10%	50V (KE300,KE400S)
C51	1-163-019-00	CERAMIC CHIP	0.0068uF	10%	50V (KE200)
C51	1-164-161-11	CERAMIC CHIP	0.0022uF	10%	100V (RX300)
C52	1-164-182-11	CERAMIC CHIP	0.0033uF	10%	50V (KE300,KE400S)
C52	1-163-019-00	CERAMIC CHIP	0.0068uF	10%	50V (KE200)
C52	1-164-161-11	CERAMIC CHIP	0.0022uF	10%	100V (RX300)
C53	1-163-020-00	CERAMIC CHIP	0.0082uF	10%	50V (KE300,KE400S)
C53	1-163-022-00	CERAMIC CHIP	0.012uF	10%	50V (KE200)
C53	1-163-019-00	CERAMIC CHIP	0.0068uF	10%	50V (RX300)
C54	1-136-601-11	FILM	0.01uF	5%	630V (EXCEPT KE200)
C54	1-136-560-11	FILM	0.0056uF	5%	630V (KE200)
C56	1-164-505-11	CERAMIC CHIP	2.2uF		16V
C57	1-164-346-11	CERAMIC CHIP	1uF		16V
C58	1-163-024-00	CERAMIC CHIP	0.018uF	10%	50V (KE200)
C71	1-164-346-11	CERAMIC CHIP	1uF		16V (EXCEPT KE200)
C72	1-109-889-11	ELECT	1uF	20%	50V (KE200)
C80	1-124-234-00	ELECT	22uF	20%	16V (EXCEPT KE200)
C81	1-164-232-11	CERAMIC CHIP	0.01uF		50V (EXCEPT KE200)
C82	1-136-157-00	FILM	0.022uF	5%	50V (EXCEPT KE200)
C83	1-164-004-11	CERAMIC CHIP	0.1uF	10%	25V (EXCEPT KE200)
C84	1-136-439-11	FILM	330PF	5%	630V (KE300,KE400S)
C84	1-136-478-11	FILM	470PF	5%	630V (RX300)
C85	1-136-433-11	FILM	100PF	5%	630V (EXCEPT KE200)

Ref. No.	Part No.	Description			Remark
C86	1-163-143-00	CERAMIC CHIP	0.0012uF	5% 50V	(EXCEPT KE200)
C87	1-136-273-91	FILM	75PF	5% 630V	(EXCEPT KE200)
C88	1-163-003-11	CERAMIC CHIP	330PF	10% 50V	(EXCEPT KE200)
C89	1-124-234-00	ELECT	22uF	20% 16V	(EXCEPT KE200)
C90	1-107-584-11	CERAMIC	4PF	0.25PF 500V	(EXCEPT KE200)
C91	1-164-232-11	CERAMIC CHIP	0.01uF	50V	(EXCEPT KE200)
C92	1-136-157-00	FILM	0.022uF	5% 50V	(EXCEPT KE200)
C93	1-164-004-11	CERAMIC CHIP	0.1uF	10% 25V	(EXCEPT KE200)
C94	1-136-439-11	FILM	330PF	5% 630V	(KE300,KE400S)
C94	1-136-478-11	FILM	470PF	5% 630V	(RX300)
C95	1-136-433-11	FILM	100PF	5% 630V	(EXCEPT KE200)
C96	1-163-143-00	CERAMIC CHIP	0.0012uF	5% 50V	(EXCEPT KE200)
C97	1-136-273-91	FILM	75PF	5% 630V	(EXCEPT KE200)
C98	1-163-003-11	CERAMIC CHIP	330PF	10% 50V	(EXCEPT KE200)
C99	1-164-005-11	CERAMIC CHIP	0.47uF	25V	(EXCEPT KE200)

< CONNECTOR >

* CNP31	1-580-782-11	CONNECTOR, BOARD TO BOARD
* CNP32	1-580-781-11	PIN, CONNECTOR (PC BOARD) 7P
* CNP33	1-580-782-11	CONNECTOR, BOARD TO BOARD
* CNP71	1-564-719-11	PIN, CONNECTOR (SMALL TYPE) 3P
CNP72	1-764-902-11	CONNECTOR, FFC/FPC 4P
* CNP75	1-564-718-11	PIN, CONNECTOR (SMALL TYPE) 2P (RX300)

< DIODE >

D31	8-719-404-46	DIODE MA110

< IC >

IC31	8-759-106-02	IC uPC4570-G2
IC81	8-759-106-56	IC uPC1297CA (EXCEPT KE200)

< JUMPER RESISTOR >

Ref. No.	Part No.	Description			Remark
JW1	1-216-296-00	METAL CHIP	0	5%	1/8W (KE200)
JW2	1-216-295-00	METAL CHIP	0	5%	1/10W (KE200)
JW3	1-216-295-00	METAL CHIP	0	5%	1/10W (KE200)
JW4	1-216-295-00	METAL CHIP	0	5%	1/10W (KE200)
JW6	1-216-295-00	METAL CHIP	0	5%	1/10W (KE200)
JW7	1-216-295-00	METAL CHIP	0	5%	1/10W (KE200)
JW52	1-216-296-00	METAL CHIP	0	5%	1/8W (KE200)
JW53	1-216-296-00	METAL CHIP	0	5%	1/8W (KE200)
JW54	1-216-296-00	METAL CHIP	0	5%	1/8W (KE200)
JW55	1-216-296-00	METAL CHIP	0	5%	1/8W (KE200)
JW56	1-216-296-00	METAL CHIP	0	5%	1/8W (KE200)
JW57	1-216-296-00	METAL CHIP	0	5%	1/8W (KE200)
JW58	1-216-296-00	METAL CHIP	0	5%	1/8W (KE200)
JW59	1-216-296-00	METAL CHIP	0	5%	1/8W (KE200)
JW60	1-216-296-00	METAL CHIP	0	5%	1/8W (KE200)
JW61	1-216-296-00	METAL CHIP	0	5%	1/8W (KE200)
JW62	1-216-296-00	METAL CHIP	0	5%	1/8W (KE200)
JW63	1-216-296-00	METAL CHIP	0	5%	1/8W (KE200)

< COIL >

L11	1-410-780-11	INDUCTOR	27mH (KE200)
L21	1-410-780-11	INDUCTOR	27mH (KE200)
L81	1-410-780-11	INDUCTOR	27mH (EXCEPT KE200)
L91	1-410-780-11	INDUCTOR	27mH (EXCEPT KE200)

< TRANSISTOR >

Q51	8-729-822-05	TRANSISTOR	2SD1622-ST-TD (EXCEPT KE200)
Q51	8-729-142-46	TRANSISTOR	2SC2001-LK (KE200)
Q52	8-729-822-05	TRANSISTOR	2SD1622-ST-TD (EXCEPT KE200)
Q52	8-729-142-46	TRANSISTOR	2SC2001-LK (KE200)
Q53	8-729-822-05	TRANSISTOR	2SD1622-ST-TD (EXCEPT KE200)
Q53	8-729-111-29	TRANSISTOR	2SD1616A-K (KE200)
Q71	8-729-602-36	TRANSISTOR	2SA1602-F (KE300,KE400S)
Q71	8-729-216-22	TRANSISTOR	2SA1162-G (KE200,RX300)

< RESISTOR >

Ref. No.	Part No.	Description			Remark
R11	1-216-107-00	METAL CHIP	270K	5%	1/10W (EXCEPT RX300)
R11	1-216-099-00	METAL CHIP	120K	5%	1/10W (RX300)
R12	1-216-025-91	METAL GLAZE	100	5%	1/10W
R13	1-216-100-00	METAL GLAZE	130K	5%	1/10W
R14	1-216-068-00	METAL CHIP	6.2K	5%	1/10W

AUDIO

Ref. No.	Part No.	Description			Remark
R15	1-249-430-11	CARBON	12K	5%	1/4W (KE200)
R21	1-216-107-00	METAL CHIP	270K	5%	1/10W (EXCEPT RX300)
R21	1-216-099-00	METAL CHIP	120K	5%	1/10W (RX300)
R22	1-216-025-91	METAL GLAZE	100	5%	1/10W
R23	1-216-100-00	METAL GLAZE	130K	5%	1/10W
R24	1-216-068-00	METAL CHIP	6.2K	5%	1/10W
R25	1-249-430-11	CARBON	12K	5%	1/4W (KE200)
R31	1-216-033-00	METAL CHIP	220	5%	1/10W
R32	1-216-033-00	METAL CHIP	220	5%	1/10W
R33	1-216-065-00	METAL CHIP	4.7K	5%	1/10W (EXCEPT KE200)
R41	1-249-393-11	CARBON	10	5%	1/4W (KE200)
R42	1-249-393-11	CARBON	10	5%	1/4W (KE200)
R51	1-216-091-00	METAL CHIP	56K	5%	1/10W (KE300,KE400S)
R51	1-216-085-00	METAL CHIP	33K	5%	1/10W (KE200)
R51	1-216-097-91	METAL GLAZE	100K	5%	1/10W (RX300)
R52	1-216-091-00	METAL CHIP	56K	5%	1/10W (KE300,KE400S)
R52	1-216-085-00	METAL CHIP	33K	5%	1/10W (KE200)
R52	1-216-097-91	METAL GLAZE	100K	5%	1/10W (RX300)
R53	1-216-073-00	METAL CHIP	10K	5%	1/10W
R54	1-216-309-00	METAL CHIP	5.6	5%	1/10W
R55	1-216-309-00	METAL CHIP	5.6	5%	1/10W
R56	1-216-298-00	METAL CHIP	2.2	5%	1/10W (KE200)
R57	1-216-298-00	METAL CHIP	2.2	5%	1/10W (EXCEPT KE200)
R71	1-216-025-91	METAL GLAZE	100	5%	1/10W (KE300,KE400S)
R71	1-216-082-00	METAL GLAZE	24K	5%	1/10W (KE200,RX300)
R72	1-216-055-00	METAL CHIP	1.8K	5%	1/10W (KE300,KE400S)
R72	1-216-081-00	METAL CHIP	22K	5%	1/10W (KE200,RX300)
R73	1-216-089-91	METAL GLAZE	47K	5%	1/10W
R74	1-216-089-91	METAL GLAZE	47K	5%	1/10W
R81	1-216-073-00	METAL CHIP	10K	5%	1/10W (EXCEPT KE200)
R82	1-216-085-00	METAL CHIP	33K	5%	1/10W (EXCEPT KE200)
R83	1-216-001-00	METAL CHIP	10	5%	1/10W (EXCEPT KE200)
R84	1-216-101-00	METAL CHIP	150K	5%	1/10W (EXCEPT KE200)
R85	1-216-075-00	METAL CHIP	12K	5%	1/10W (EXCEPT KE200)
R91	1-216-073-00	METAL CHIP	10K	5%	1/10W (EXCEPT KE200)
R92	1-216-085-00	METAL CHIP	33K	5%	1/10W (EXCEPT KE200)
R93	1-216-001-00	METAL CHIP	10	5%	1/10W (EXCEPT KE200)
R94	1-216-101-00	METAL CHIP	150K	5%	1/10W (EXCEPT KE200)
R95	1-216-075-00	METAL CHIP	12K	5%	1/10W (EXCEPT KE200)

< VARIABLE RESISTOR >

RV11	1-241-761-11	RES, ADJ, CARBON 1K (PB LEVEL L)
RV12	1-238-551-11	RES, ADJ, CARBON 220K (BIAS L) (KE200)
RV21	1-241-761-11	RES, ADJ, CARBON 1K (PB LEVEL R) (KE200,RX300)
RV22	1-238-551-11	RES, ADJ, CARBON 220K (BIAS R) (KE200)
RV71	1-241-630-11	RES, ADJ, CARBON 10K (TAPE SPEED L) (KE200,RX300)
RV71	1-241-761-11	RES, ADJ, CARBON 1K (TAPE SPEED L) (KE300,KE400S)
RV72	1-241-630-11	RES, ADJ, CARBON 10K (TAPE SPEED H) (KE200,RX300)
RV72	1-241-762-11	RES, ADJ, CARBON 2.2K (TAPE SPEED H) (KE300,KE400S)
RV81	1-241-786-11	RES, ADJ, CARBON 22K (REC BIAS L) (EXCEPT KE200)
RV91	1-241-786-11	RES, ADJ, CARBON 22K (REC BIAS R) (EXCEPT KE200)

< RELAY >

RY31	1-515-913-11	RELAY

< TRANSFORMER >

T51	1-433-383-11	TRANSFORMER, BIAS OSCILLATION (KE300,KE400S)
T51	1-426-650-11	TRANSFORMER, BIAS OSCILLATION (KE200)
T51	1-406-417-11	COIL, BIAS OSCILLATION (RX300)
T81	1-433-398-11	TRANSFORMER, BIAS OSCILLATOR (KE300,KE400S)
T81	1-433-381-11	TRANSFORMER, BIAS OSCILLATOR (RX300)
T91	1-433-398-11	TRANSFORMER, BIAS OSCILLATOR (KE300,KE400S)
T91	1-433-381-11	TRANSFORMER, BIAS OSCILLATOR (RX300)

< TEST PIN >

* TP81	1-568-449-11	HOUSING, CONNECTOR(PC BOARD)3P (EXCEPT KE200)

****

Ref. No.	Part No.	Description			Remark
*	A-2007-481-A	DOLBY-S BOARD, COMPLETE (KE400S)			
		**********			
		< CAPACITOR >			
C1	1-136-165-00	FILM	0.1uF	5%	50V
C2	1-163-012-00	CERAMIC CHIP	0.0018uF	10%	50V
C3	1-163-012-00	CERAMIC CHIP	0.0018uF	10%	50V
C4	1-164-222-11	CERAMIC CHIP	0.22uF		25V
C5	1-136-165-00	FILM	0.1uF	5%	50V
C6	1-136-165-00	FILM	0.1uF	5%	50V
C7	1-137-372-11	FILM	0.022uF	5%	50V
C8	1-164-222-11	CERAMIC CHIP	0.22uF		25V
C9	1-126-301-11	ELECT	1uF	20%	50V
C10	1-137-442-11	FILM	0.039uF	5%	50V
C11	1-163-007-11	CERAMIC CHIP	680PF	10%	50V
C12	1-164-717-11	CERAMIC CHIP	0.0082uF	5%	50V
C13	1-163-038-91	CERAMIC CHIP	0.1uF		25V
C14	1-124-465-00	ELECT	0.47uF	20%	50V
C15	1-164-222-11	CERAMIC CHIP	0.22uF		25V
C16	1-163-038-91	CERAMIC CHIP	0.1uF		25V
C17	1-124-465-00	ELECT	0.47uF	20%	50V
C18	1-163-038-91	CERAMIC CHIP	0.1uF		25V
C19	1-164-222-11	CERAMIC CHIP	0.22uF		25V
C20	1-163-035-00	CERAMIC CHIP	0.047uF		50V
C21	1-164-717-11	CERAMIC CHIP	0.0082uF	5%	50V
C22	1-164-161-11	CERAMIC CHIP	0.0022uF	10%	100V
C23	1-163-005-11	CERAMIC CHIP	470PF	10%	50V
C24	1-137-442-11	FILM	0.039uF	5%	50V
C25	1-136-165-00	FILM	0.1uF	5%	50V
C26	1-137-372-11	FILM	0.022uF	5%	50V
C28	1-163-038-91	CERAMIC CHIP	0.1uF		25V
		< CONNECTOR >			
CN1	1-695-092-11	SOCKET, CONNECTOR 7P			
		< IC >			
IC1	8-752-076-30	IC CXA1917AM			
		< JUMPER RESISTOR>			
J1	1-216-296-00	METAL CHIP	0	0.5%	1/8W
J2	1-216-296-00	METAL CHIP	0	0.5%	1/8W
J3	1-216-296-00	METAL CHIP	0	0.5%	1/8W
		< RESISTOR >			
R1	1-216-685-11	METAL CHIP	27K	0.5%	1/10W
R2	1-208-811-11	METAL GLAZE	16K	2%	1/10W
R3	1-208-791-11	METAL GLAZE	2.4K	2%	1/10W
R4	1-208-799-11	METAL GLAZE	5.1K	2%	1/10W
R5	1-216-689-11	METAL CHIP	39K	0.5%	1/10W
R6	1-216-689-11	METAL CHIP	39K	0.5%	1/10W
R7	1-216-615-11	METAL CHIP	33	0.5%	1/10W
R8	1-208-462-41	METAL GLAZE	10K	2%	1/10W
R9	1-208-812-11	METAL GLAZE	18K	2%	1/10W
R10	1-216-615-11	METAL CHIP	33	0.5%	1/10W
R11	1-216-619-11	METAL CHIP	47	0.5%	1/10W
R12	1-216-684-11	METAL CHIP	24K	0.5%	1/10W
R13	1-216-615-11	METAL CHIP	33	0.5%	1/10W
R14	1-216-619-11	METAL CHIP	47	0.5%	1/10W
R15	1-216-655-11	METAL CHIP	1.5K	0.5%	1/10W
R16	1-216-678-11	METAL CHIP	13K	0.5%	1/10W
R17	1-216-673-11	METAL CHIP	8.2K	0.5%	1/10W
R18	1-208-462-41	METAL GLAZE	10K	2%	1/10W
R19	1-208-462-41	METAL GLAZE	10K	2%	1/10W
R20	1-216-689-11	METAL CHIP	39K	0.5%	1/10W
**********					
*	1-638-020-11	LEAF SW BOARD			
		**********			
		< CONNECTOR >			
* CNP81	1-568-850-11	SOCKET, CONNECTOR 7P			
CNP81	1-695-368-31	PIN, CONNECTOR (PC BOARD) 7P			
		< IC >			
IC81	8-749-924-10	IC (PHONT REFLECTOR NJL5165K-B (H1))			
		< RESISTOR >			
R81	1-249-414-11	CARBON	560	5%	1/4W
R82	1-247-818-11	CARBON	300	5%	1/4W (RX300)
R83	1-247-834-11	CARBON	1.3K	5%	1/4W
R84	1-249-417-11	CARBON	1K	5%	1/4W
R85	1-249-408-11	CARBON	180	5%	1/4W
		< SWITCH >			
S81	1-571-958-11	SWITCH, PUSH (1 KEY) (STOP)			
S82	1-571-281-21	SWITCH, LEAF (70uS)			
S83	1-571-281-21	SWITCH, LEAF (METAL)			
S84	1-571-281-21	SWITCH, LEAF (REC-A)			
S85	1-571-281-21	SWITCH, LEAF (REC-B) (RX300)			
S86	1-571-281-21	SWITCH, LEAF (HALF)			
**********					

Ref. No.	Part No.	Description				Remark
*	A-2007-523-A	MAIN BOARD, COMPLETE (KE200)				
*	A-2007-524-A	MAIN BOARD, COMPLETE (KE400S:EXCEPT US)				
*	A-2007-525-A	MAIN BOARD, COMPLETE (KE400S:US)				
*	A-2007-526-A	MAIN BOARD, COMPLETE (KE300:EXCEPT E)				
*	A-2007-527-A	MAIN BOARD, COMPLETE (KE300:E)				
*	A-2007-591-A	MAIN BOARD, COMPLETE (RX300)				
		**********				
		AC POWER SW BOARD (EXCEPT US,CND,E)				
		**********				
		PANEL BOARD				
		**********				
		POWER SW BOARD (US,CND,E)				
		**********				
		REC VOL BOARD				
		**********				
		TRANSFORMER BOARD				
		**********				
		HP BOARD				
		*********				
*	3-377-337-11	HOLDER (FL)				
*	3-923-762-11	HOLDER (TR)				
		< CAPACITOR >				
C101	1-137-372-11	FILM	0.022uF	5%	50V	(EXCEPT KE200)
C101	1-136-157-00	FILM	0.022uF	5%	50V	(KE200)
C102	1-126-963-11	ELECT	4.7uF	20%	50V	
C103	1-162-302-11	CERAMIC	0.0022uF	20%	16V	(EXCEPT KE200)
C104	1-126-964-11	ELECT	10uF	20%	50V	
C105	1-136-165-00	FILM	0.1uF	5%	50V	
C106	1-136-163-00	FILM	0.068uF	5%	50V	
C107	1-126-965-11	ELECT	22uF	20%	50V	
C108	1-126-964-11	ELECT	10uF	20%	50V	(KE400S)
C109	1-126-964-11	ELECT	10uF	20%	50V	
C110	1-126-963-11	ELECT	4.7uF	20%	50V	
C111	1-126-962-11	ELECT	3.3uF	20%	50V	
C112	1-124-902-00	ELECT	0.47uF	20%	50V	
C113	1-126-963-11	ELECT	4.7uF	20%	50V	
C131	1-126-963-11	ELECT	4.7uF	20%	50V	(EXCEPT KE200)
C132	1-126-962-11	ELECT	3.3uF	20%	50V	
C133	1-162-294-31	CERAMIC	0.001uF	10%	50V	
C201	1-137-372-11	FILM	0.022uF	5%	50V	(EXCEPT KE200)
C201	1-136-157-00	FILM	0.022uF	5%	50V	(KE200)
C202	1-126-963-11	ELECT	4.7uF	20%	50V	
C203	1-162-302-11	CERAMIC	0.0022uF	20%	16V	(EXCEPT KE200)
C204	1-126-964-11	ELECT	10uF	20%	50V	
C205	1-136-165-00	FILM	0.1uF	5%	50V	
C206	1-136-163-00	FILM	0.068uF	5%	50V	

Ref. No.	Part No.	Description				Remark
C207	1-126-965-11	ELECT	22uF	20%	50V	
C208	1-126-964-11	ELECT	10uF	20%	50V	(KE400S)
C209	1-126-964-11	ELECT	10uF	20%	50V	
C210	1-126-963-11	ELECT	4.7uF	20%	50V	
C211	1-126-962-11	ELECT	3.3uF	20%	50V	
C212	1-124-902-00	ELECT	0.47uF	20%	50V	
C213	1-126-963-11	ELECT	4.7uF	20%	50V	
C231	1-126-963-11	ELECT	4.7uF	20%	50V	(EXCEPT KE200)
C232	1-126-962-11	ELECT	3.3uF	20%	50V	
C233	1-162-294-31	CERAMIC	0.001uF	10%	50V	
C501	1-126-952-11	ELECT	1000uF	20%	16V	
C502	1-126-964-11	ELECT	10uF	20%	50V	
C503	1-126-964-11	ELECT	10uF	20%	50V	
C504	1-124-903-11	ELECT	1uF	20%	50V	(EXCEPT KE200)
C505	1-126-964-11	ELECT	10uF	20%	50V	
C506	1-126-925-11	ELECT	470uF	20%	10V	(KE400S,KE200)
C506	1-126-933-11	ELECT	100uF	20%	10V	(KE300,RX300)
C511	1-137-374-11	FILM	0.047uF	5%	50V	(EXCEPT KE200)
C512	1-136-164-00	FILM	0.082uF	5%	50V	(EXCEPT KE200)
C513	1-137-367-11	FILM	0.0033uF	5%	50V	(EXCEPT KE200)
C521	1-126-964-11	ELECT	10uF	20%	50V	
C551	1-162-282-31	CERAMIC	100PF	10%	50V	
C552	1-161-494-00	CERAMIC	0.022uF		25V	
C553	1-162-217-31	CERAMIC	56PF	5%	50V	
C554	1-124-925-11	ELECT	2.2uF	20%	100V	
C555	1-124-925-11	ELECT	2.2uF	20%	100V	
C571	1-124-925-11	ELECT	2.2uF	20%	100V	
C572	1-126-916-11	ELECT	1000uF	20%	6.3V	
C601	1-164-159-11	CERAMIC	0.1uF		50V	
C602	1-162-288-31	CERAMIC	330PF	10%	50V	
C701	1-126-943-11	ELECT	2200uF	20%	25V	
C702	1-126-943-11	ELECT	2200uF	20%	25V	
C703	1-104-664-11	ELECT	47uF	20%	25V	
C704	1-126-926-11	ELECT	1000uF	20%	10V	
C705	1-126-926-11	ELECT	1000uF	20%	10V	
C706	1-126-935-11	ELECT	470uF	20%	6.3V	
C707	1-126-964-11	ELECT	10uF	20%	50V	
C708	1-126-963-11	ELECT	4.7uF	20%	50V	
C709	1-126-968-11	ELECT	100uF	20%	50V	
C710	1-104-664-11	ELECT	47uF	20%	25V	
C711	1-164-159-11	CERAMIC	0.1uF		50V	
C712	1-161-494-00	CERAMIC	0.022uF		25V	
⚠C713	1-113-925-11	CERAMIC	0.01uF	20%	250V	(EXCEPT US,E)

The components identified by mark ⚠ or dotted line with mark ⚠ are critical for safety.
Replace only with part number specified.

Les composants identifiés par une marque ⚠ sont critiques pour la sécurité.
Ne les remplacer que par une pièce portant le numéro spécifié.

Ref. No.	Part No.	Description	Remark
C714	1-136-169-00	FILM 0.22uF 5%	50V (KE200,KE300:EXCEPT E.KE400S)
C715	1-136-169-00	FILM 0.22uF 5%	50V (KE200,KE300:EXCEPT E.KE400S)
⚠C716	1-113-920-11	CERAMIC 0.0022uF 20%	250V (RX300)
C801	1-126-963-11	ELECT 4.7uF 20%	50V
C803	1-161-494-00	CERAMIC 0.022uF	25V
C804	1-161-494-00	CERAMIC 0.022uF	25V
C805	1-161-494-00	CERAMIC 0.022uF	25V
C806	1-126-964-11	ELECT 10uF 20%	50V
C807	1-126-935-11	ELECT 470uF 20%	6.3V
C808	1-161-494-00	CERAMIC 0.022uF	25V
C809	1-161-494-00	CERAMIC 0.022uF	25V
C810	1-162-282-31	CERAMIC 100PF 10%	50V
C811	1-164-159-11	CERAMIC 0.1uF	50V
C812	1-137-374-11	FILM 0.047uF 5%	50V (KE200,KE300:EXCEPT E.KE400S)
		< CONNECTOR >	
* CN81	1-568-826-11	SOCKET, CONNECTOR 7P	
CN101	1-695-087-11	PIN, CONNECTOR (PC BOARD) 7P (KE400S)	
CN201	1-695-087-11	PIN, CONNECTOR (PC BOARD) 7P (KE400S)	
* CN504	1-568-830-11	SOCKET, CONNECTOR 11P	
* CN505	1-568-954-11	PIN, CONNECTOR 5P (US,CND,E)	
CN506	1-506-468-11	PIN, CONNECTOR 3P	
CN701	1-564-510-11	PLUG, CONNECTOR 7P	
* CN702	1-580-230-31	PIN, CONNECTOR (PC BOARD) 2P	
* CN703	1-573-565-11	PIN, CONNECTOR 5P (KE300:E)	
CN704	1-568-226-11	PIN, CONNECTOR 2P (EXCEPT US,E)	
* CN801	1-568-844-11	SOCKET, CONNECTOR 29P	
* CN901	1-568-844-11	SOCKET, CONNECTOR 29P	
* CN904	1-568-830-11	SOCKET, CONNECTOR 11P	
* CNB31	1-691-916-11	CONNECTOR, BOARD TO BOARD	
* CNB33	1-691-916-11	CONNECTOR, BOARD TO BOARD	
		< DIODE >	
D131	8-719-987-63	DIODE 1N4148M	
D132	8-719-987-63	DIODE 1N4148M	
D231	8-719-987-63	DIODE 1N4148M	
D232	8-719-987-63	DIODE 1N4148M	
D511	8-719-987-63	DIODE 1N4148M (EXCEPT KE200)	
D512	8-719-987-63	DIODE 1N4148M (EXCEPT KE200)	
D513	8-719-987-63	DIODE 1N4148M	
D551	8-719-987-63	DIODE 1N4148M	
D701	8-719-024-99	DIODE 11ES2-NTA2B	
D702	8-719-024-99	DIODE 11ES2-NTA2B	
D703	8-719-024-99	DIODE 11ES2-NTA2B	
D704	8-719-024-99	DIODE 11ES2-NTA2B	
D705	8-719-024-99	DIODE 11ES2-NTA2B	
D706	8-719-024-99	DIODE 11ES2-NTA2B	
D707	8-719-024-99	DIODE 11ES2-NTA2B	
D708	8-719-933-33	DIODE HZS6A1L	

Ref. No.	Part No.	Description	Remark
D709	8-719-933-54	DIODE HZS9A2L	
D710	8-719-000-60	DIODE UZL-6M2	
D711	8-719-987-63	DIODE 1N4148M	
D712	8-719-987-63	DIODE 1N4148M	
D713	8-719-000-93	DIODE UZL-7H1	
D714	8-719-987-63	DIODE 1N4148M	
D715	8-719-985-41	DIODE HZS2CLL	
D801	8-719-933-33	DIODE HZS6A1L	
D802	8-719-933-33	DIODE HZS6A1L	
		< INDICATOR TUBE >	
FL901	1-517-374-11	INDICATOR TUBE, FLUORESCENT (KE400S)	
FL901	1-517-173-11	INDICATOR TUBE, FLUORESCENT (EXCEPT KE400S)	
		< IC >	
IC501	8-752-066-35	IC CXA1563S (KE400S)	
IC501	8-752-060-46	IC CXA1561S (EXCEPT KE400S)	
IC502	8-752-055-62	IC CXA1579P (EXCEPT RX300)	
IC502	8-752-055-61	IC CXA1578P (RX300)	
IC503	8-759-634-51	IC M5218AP (EXCEPT KE200)	
IC504	8-759-634-51	IC M5218AP	
IC505	8-759-634-51	IC M5218AP	
IC506	8-759-140-53	IC MC14053BCP (EXCEPT KE200)	
IC507	8-759-634-51	IC M5218AP (EXCEPT KE200)	
IC508	8-759-000-48	IC MC14052BCP	
IC509	8-759-916-14	IC SN74HC04AN (EXCEPT KE200)	
IC510	8-759-634-51	IC M5218AP	
IC511	8-759-634-51	IC M5218AP	
IC512	8-759-634-51	IC M5218AP (KE400S)	
IC601	8-759-803-42	IC LA6500-FA	
IC701	8-759-634-51	IC M5218AP	
IC801	8-752-856-27	IC CXP82612-022Q	
IC802	8-759-165-82	IC PST600E-T	
IC901	8-741-810-59	IC SBX1810-59	
		< JACK >	
J501	1-770-614-11	JACK, PIN 4P (LINE)	
J502	1-568-519-41	JACK, LARGE TYPE (PHONES)	
		< FILTER >	
LPF101	1-235-175-11	FILTER, LOW PASS (EXCEPT KE200)	
LPF101	1-236-087-11	FILTER, LOW PASS (KE200)	
LPF201	1-235-175-11	FILTER, LOW PASS (EXCEPT KE200)	
LPF201	1-236-087-11	FILTER, LOW PASS (KE200)	
		< TRANSISTOR >	
Q101	8-729-900-89	TRANSISTOR DTC144ES	
Q102	8-729-900-80	TRANSISTOR DTC114ES (EXCEPT KE200)	
Q121	8-729-922-37	TRANSISTOR 2SD2144S-UVW	
Q122	8-729-119-78	TRANSISTOR 2SC2785-HFE (EXCEPT KE200)	
Q201	8-729-900-89	TRANSISTOR DTC144ES	

The components identified by mark ⚠ or dotted line with mark ⚠ are critical for safety.
Replace only with part number specified.

Les composants identifiés par une marque ⚠ sont critiques pour la sécurité.
Ne les remplacer que par une pièce portant le numéro spécifié.

Ref. No.	Part No.	Description	Remark
Q202	8-729-900-80	TRANSISTOR	DTC114ES (EXCEPT KE200)
Q221	8-729-922-37	TRANSISTOR	2SD2144S-UVW
Q222	8-729-119-78	TRANSISTOR	2SC2785-HFE (EXCEPT KE200)
Q503	8-729-422-57	TRANSISTOR	UN4111
Q504	8-729-900-80	TRANSISTOR	DTC114ES
Q505	8-729-900-89	TRANSISTOR	DTC144ES (RX300)
Q511	8-729-119-78	TRANSISTOR	2SC2785-HFE (EXCEPT KE200)
Q512	8-729-900-74	TRANSISTOR	DTC143ES (EXCEPT KE200)
Q521	8-729-900-80	TRANSISTOR	DTC114ES
Q531	8-729-422-57	TRANSISTOR	UN4111 (EXCEPT KE200)
Q532	8-729-900-80	TRANSISTOR	DTC114ES
Q551	8-729-119-76	TRANSISTOR	2SA1175-HFE
Q572	8-729-422-57	TRANSISTOR	UN4111
Q573	8-729-900-65	TRANSISTOR	DTA144ES (EXCEPT KE200)
Q601	8-729-801-93	TRANSISTOR	2SD1387-3
Q701	8-729-141-83	TRANSISTOR	2SB1094-LK
Q702	8-729-209-15	TRANSISTOR	2SD2012
Q703	8-729-900-74	TRANSISTOR	DTC143TS (EXCEPT KE200)
Q704	8-729-141-83	TRANSISTOR	2SB1094-LK
Q705	8-729-119-78	TRANSISTOR	2SC2785-HFE
Q706	8-729-900-74	TRANSISTOR	DTC143TS (EXCEPT KE200)
Q707	8-729-119-76	TRANSISTOR	2SA1175-HFE
Q708	8-729-140-04	TRANSISTOR	2SB1116A-L
Q803	8-729-900-80	TRANSISTOR	DTC114ES
Q805	8-729-119-76	TRANSISTOR	2SA1175-HFE

< RESISTOR >

Ref. No.	Part No.	Description			Remark
R101	1-247-838-00	CARBON	2K	5%	1/4W (EXCPT RX300)
R101	1-249-421-11	CARBON	2.2K	5%	1/4W (RX300)
R102	1-247-842-11	CARBON	3K	5%	1/4W (EXCEPT RX300)
R102	1-249-423-11	CARBON	3.3K	5%	1/4W (RX300)
R104	1-249-417-11	CARBON	1K	5%	1/4W
R105	1-249-423-11	CARBON	3.3K	5%	1/4W
R106	1-247-887-00	CARBON	220K	5%	1/4W (EXCEPT KE200)
R107	1-249-428-11	CARBON	8.2K	5%	1/4W
R108	1-249-429-11	CARBON	10K	5%	1/4W
R110	1-249-429-11	CARBON	10K	5%	1/4W
R111	1-249-423-11	CARBON	3.3K	5%	1/4W
R112	1-247-864-11	CARBON	24K	5%	1/4W (KE400S)
R113	1-249-429-11	CARBON	10K	5%	1/4W (KE400S)
R114	1-249-437-11	CARBON	47K	5%	1/4W (KE400S)
R121	1-249-437-11	CARBON	47K	5%	1/4W
R122	1-249-421-11	CARBON	2.2K	5%	1/4W
R123	1-249-421-11	CARBON	2.2K	5%	1/4W
R124	1-249-437-11	CARBON	47K	5%	1/4W (EXCEPT KE200)
R125	1-249-425-11	CARBON	4.7K	5%	1/4W (EXCEPT KE200)
R131	1-249-425-11	CARBON	4.7K	5%	1/4W (EXCEPT KE200)
R132	1-247-822-11	CARBON	430	5%	1/4W (EXCEPT KE200)
R133	1-247-866-11	CARBON	30K	5%	1/4W (EXCEPT KE200)
R134	1-249-435-11	CARBON	33K	5%	1/4W
R135	1-249-439-11	CARBON	68K	5%	1/4W
R136	1-249-410-11	CARBON	270	5%	1/4W
R141	1-249-432-11	CARBON	18K	5%	1/4W
R142	1-249-432-11	CARBON	18K	5%	1/4W
R143	1-249-423-11	CARBON	3.3K	5%	1/4W
R144	1-247-848-11	CARBON	5.1K	5%	1/4W
R145	1-249-409-11	CARBON	220	5%	1/4W
R151	1-249-433-11	CARBON	22K	5%	1/4W
R152	1-249-417-11	CARBON	1K	5%	1/4W
R153	1-249-441-11	CARBON	100K	5%	1/4W
R154	1-249-433-11	CARBON	22K	5%	1/4W
R201	1-247-838-00	CARBON	2K	5%	1/4W (EXCEPT RX300)
R201	1-249-421-11	CARBON	2.2K	5%	1/4W (RX300)
R202	1-247-842-11	CARBON	3K	5%	1/4W (EXCEPT RX300)
R202	1-249-423-11	CARBON	3.3K	5%	1/4W (RX300)
R204	1-249-417-11	CARBON	1K	5%	1/4W
R205	1-249-423-11	CARBON	3.3K	5%	1/4W
R206	1-247-887-00	CARBON	220K	5%	1/4W (EXCEPT KE200)
R207	1-249-428-11	CARBON	8.2K	5%	1/4W
R208	1-249-429-11	CARBON	10K	5%	1/4W
R210	1-249-429-11	CARBON	10K	5%	1/4W
R211	1-249-423-11	CARBON	3.3K	5%	1/4W
R212	1-247-864-11	CARBON	24K	5%	1/4W (KE400S)
R213	1-249-429-11	CARBON	10K	5%	1/4W (KE400S)
R214	1-249-437-11	CARBON	47K	5%	1/4W (KE400S)
R221	1-249-437-11	CARBON	47K	5%	1/4W
R222	1-249-421-11	CARBON	2.2K	5%	1/4W
R223	1-249-421-11	CARBON	2.2K	5%	1/4W
R224	1-249-437-11	CARBON	47K	5%	1/4W (EXCEPT KE200)
R225	1-249-425-11	CARBON	4.7K	5%	1/4W (EXCEPT KE200)
R231	1-249-425-11	CARBON	4.7K	5%	1/4W (EXCEPT KE200)
R232	1-247-822-11	CARBON	430	5%	1/4W (EXCEPT KE200)

Ref. No.	Part No.	Description			Remark
R233	1-247-866-11	CARBON	30K	5%	1/4W (EXCEPT KE200)
R234	1-249-435-11	CARBON	33K	5%	1/4W
R235	1-249-439-11	CARBON	68K	5%	1/4W
R236	1-249-410-11	CARBON	270	5%	1/4W
R241	1-249-432-11	CARBON	18K	5%	1/4W
R242	1-249-432-11	CARBON	18K	5%	1/4W
R243	1-249-423-11	CARBON	3.3K	5%	1/4W
R244	1-247-848-11	CARBON	5.1K	5%	1/4W
R245	1-249-409-11	CARBON	220	5%	1/4W
R251	1-249-433-11	CARBON	22K	5%	1/4W
R252	1-249-417-11	CARBON	1K	5%	1/4W
R253	1-249-441-11	CARBON	100K	5%	1/4W
R254	1-249-433-11	CARBON	22K	5%	1/4W
R502	1-215-452-00	METAL	20K	1%	1/4W
R503	1-249-422-11	CARBON	2.7K	5%	1/4W
R504	1-215-455-00	METAL	27K	1%	1/4W
R505	1-249-417-11	CARBON	1K	5%	1/4W (EXCEPT KE200)
R506	1-249-429-11	CARBON	10K	5%	1/4W (RX300)
R507	1-249-440-11	CARBON	82K	5%	1/4W (RX300)
R512	1-249-421-11	CARBON	2.2K	5%	1/4W (EXCEPT KE200)
R513	1-249-441-11	CARBON	100K	5%	1/4W (EXCEPT KE200)
R514	1-249-441-11	CARBON	100K	5%	1/4W (EXCEPT KE200)
R515	1-249-436-11	CARBON	39K	5%	1/4W (EXCEPT KE200)
R516	1-249-425-11	CARBON	4.7K	5%	1/4W (EXCEPT KE200)
R517	1-249-433-11	CARBON	22K	5%	1/4W (EXCEPT KE200)
R518	1-249-425-11	CARBON	4.7K	5%	1/4W (EXCEPT KE200)
R521	1-249-426-11	CARBON	5.6K	5%	1/4W (KE300.KE400S)
R521	1-247-852-11	CARBON	7.5K	5%	1/4W (RX300)
R522	1-249-426-11	CARBON	5.6K	5%	1/4W (KE300.KE400S)
R522	1-247-852-11	CARBON	7.5K	5%	1/4W (RX300)
R523	1-247-858-11	CARBON	13K	5%	1/4W (EXCEPT KE200)
R524	1-247-852-11	CARBON	7.5K	5%	1/4W (RX300)
R525	1-247-854-11	CARBON	9.1K	5%	1/4W (KE300.KE400S)
R525	1-249-429-11	CARBON	10K	5%	1/4W (RX300)
R526	1-247-854-11	CARBON	9.1K	5%	1/4W (KE300.KE400S)

Ref. No.	Part No.	Description			Remark
R526	1-249-429-11	CARBON	10K	5%	1/4W (RX300)
R527	1-249-426-11	CARBON	5.6K	5%	1/4W (EXCEPT KE200)
R528	1-249-422-11	CARBON	2.7K	5%	1/4W (EXCEPT KE200)
R529	1-249-429-11	CARBON	10K	5%	1/4W
R530	1-249-421-11	CARBON	2.2K	5%	1/4W
R531	1-249-427-11	CARBON	6.8K	5%	1/4W (KE300,KE400S)
R531	1-249-426-11	CARBON	5.6K	5%	1/4W (RX300)
R532	1-249-433-11	CARBON	22K	5%	1/4W (KE300,KE400S)
R532	1-247-862-11	CARBON	20K	5%	1/4W (RX300)
R535	1-249-419-11	CARBON	1.5K	5%	1/4W (KE300,KE400S)
R536	1-249-421-11	CARBON	2.2K	5%	1/4W (EXCEPT KE200)
R537	1-247-866-11	CARBON	30K	5%	1/4W (EXCEPT KE200)
R538	1-247-852-11	CARBON	7.5K	5%	1/4W (EXCEPT KE200)
R539	1-249-431-11	CARBON	15K	5%	1/4W (EXCEPT KE200)
R540	1-247-874-11	CARBON	62K	5%	1/4W (EXCEPT KE200)
R541	1-249-429-11	CARBON	10K	5%	1/4W (EXCEPT KE200)
R542	1-249-429-11	CARBON	10K	5%	1/4W (EXCEPT KE200)
R543	1-249-429-11	CARBON	10K	5%	1/4W (EXCEPT KE200)
R544	1-249-429-11	CARBON	10K	5%	1/4W (EXCEPT KE200)
R553	1-249-437-11	CARBON	47K	5%	1/4W
R555	1-249-427-11	CARBON	6.8K	5%	1/4W
R556	1-249-423-11	CARBON	3.3K	5%	1/4W
R557	1-249-441-11	CARBON	100K	5%	1/4W
R558	1-249-429-11	CARBON	10K	5%	1/4W
R559	1-249-441-11	CARBON	100K	5%	1/4W
R560	1-249-417-11	CARBON	1K	5%	1/4W
R561	1-249-432-11	CARBON	18K	5%	1/4W
R562	1-249-436-11	CARBON	39K	5%	1/4W
R563	1-247-848-11	CARBON	5.1K	5%	1/4W (KE200)
R564	1-247-834-11	CARBON	1.3K	5%	1/4W (KE200)
R565	1-249-430-11	CARBON	12K	5%	1/4W (KE200)
R567	1-249-433-11	CARBON	22K	5%	1/4W (KE200)
R572	1-249-429-11	CARBON	10K	5%	1/4W
R573	1-249-429-11	CARBON	10K	5%	1/4W

Ref. No.	Part No.	Description			Remark
R574	1-249-435-11	CARBON	33K	5%	1/4W (EXCEPT KE200)
R575	1-247-807-31	CARBON	100	5%	1/4W
R576	1-249-435-11	CARBON	33K	5%	1/4W (KE400S)
R577	1-249-429-11	CARBON	10K	5%	1/4W
R578	1-249-433-11	CARBON	22K	5%	1/4W
R601	1-249-419-11	CARBON	1.5K	5%	1/4W
R602	1-249-429-11	CARBON	10K	5%	1/4W
R603	1-247-807-31	CARBON	100	5%	1/4W
R604	1-249-433-11	CARBON	22K	5%	1/4W
R605	1-249-433-11	CARBON	22K	5%	1/4W
R606	1-249-430-11	CARBON	12K	5%	1/4W
R607	1-249-433-11	CARBON	22K	5%	1/4W
R608	1-247-862-11	CARBON	20K	5%	1/4W
R609	1-249-429-11	CARBON	10K	5%	1/4W
R701	1-249-425-11	CARBON	4.7K	5%	1/4W
R702	1-249-419-11	CARBON	1.5K	5%	1/4W
R703	1-249-418-11	CARBON	1.2K	5%	1/4W
R704	1-249-427-11	CARBON	6.8K	5%	1/4W
R705	1-249-419-11	CARBON	1.5K	5%	1/4W
R706	1-249-419-11	CARBON	1.5K	5%	1/4W
R707	1-249-429-11	CARBON	10K	5%	1/4W
R708	1-249-425-11	CARBON	4.7K	5%	1/4W
R709	1-249-409-11	CARBON	220	5%	1/4W
R710	1-249-417-11	CARBON	1K	5%	1/4W
R711	1-249-427-11	CARBON	6.8K	5%	1/4W
R712	1-249-427-11	CARBON	6.8K	5%	1/4W
R713	1-249-421-11	CARBON	2.2K	5%	1/4W
R714	1-249-425-11	CARBON	4.7K	5%	1/4W (US,CND,E)
R715	1-249-421-11	CARBON	2.2K	5%	1/4W
R716	1-249-437-11	CARBON	47K	5%	1/4W
R717	1-249-429-11	CARBON	10K	5%	1/4W
R718	1-247-870-11	CARBON	43K	5%	1/4W
R719	1-249-429-11	CARBON	10K	5%	1/4W
R801	1-249-417-11	CARBON	1K	5%	1/4W
R802	1-249-441-11	CARBON	100K	5%	1/4W
R803	1-249-429-11	CARBON	10K	5%	1/4W
R805	1-249-434-11	CARBON	27K	5%	1/4W
R806	1-249-434-11	CARBON	27K	5%	1/4W (EXCEPT KE200)
R807	1-249-434-11	CARBON	27K	5%	1/4W (EXCEPT KE200)
R808	1-249-434-11	CARBON	27K	5%	1/4W (EXCEPT KE200)
R809	1-249-434-11	CARBON	27K	5%	1/4W (EXCEPT KE200)
R810	1-247-807-31	CARBON	100	5%	1/4W
R811	1-247-807-31	CARBON	100	5%	1/4W
R812	1-247-807-31	CARBON	100	5%	1/4W
R813	1-247-807-31	CARBON	100	5%	1/4W
R814	1-247-807-31	CARBON	100	5%	1/4W
R815	1-247-807-31	CARBON	100	5%	1/4W
R816	1-247-807-31	CARBON	100	5%	1/4W
R820	1-247-807-31	CARBON	100	5%	1/4W
R821	1-249-429-11	CARBON	10K	5%	1/4W
R822	1-249-429-11	CARBON	10K	5%	1/4W
R823	1-249-429-11	CARBON	10K	5%	1/4W
R824	1-249-421-11	CARBON	2.2K	5%	1/4W
R825	1-249-435-11	CARBON	33K	5%	1/4W
R826	1-249-421-11	CARBON	2.2K	5%	1/4W
R827	1-249-422-11	CARBON	2.7K	5%	1/4W
R828	1-249-422-11	CARBON	2.7K	5%	1/4W
R829	1-249-422-11	CARBON	2.7K	5%	1/4W
R830	1-249-429-11	CARBON	10K	5%	1/4W
R831	1-249-429-11	CARBON	10K	5%	1/4W
R832	1-249-437-11	CARBON	47K	5%	1/4W
R833	1-249-437-11	CARBON	47K	5%	1/4W
R901	1-249-420-11	CARBON	1.8K	5%	1/4W
R902	1-249-423-11	CARBON	3.3K	5%	1/4W
R903	1-249-426-11	CARBON	5.6K	5%	1/4W
R904	1-249-429-11	CARBON	10K	5%	1/4W
R905	1-249-435-11	CARBON	33K	5%	1/4W
R906	1-249-420-11	CARBON	1.8K	5%	1/4W
R907	1-249-423-11	CARBON	3.3K	5%	1/4W
R908	1-249-426-11	CARBON	5.6K	5%	1/4W
R909	1-249-429-11	CARBON	10K	5%	1/4W (RX300)
R910	1-249-435-11	CARBON	33K	5%	1/4W (RX300)
R912	1-247-807-31	CARBON	100	5%	1/4W
R913	1-249-429-11	CARBON	10K	5%	1/4W
R921	1-249-430-11	CARBON	12K	5%	1/4W (KE400S)
R921	1-247-836-11	CARBON	1.6K	5%	1/4W (EXCEPT KE400S)
R922	1-249-427-11	CARBON	6.8K	5%	1/4W (KE400S)
R922	1-249-421-11	CARBON	2.2K	5%	1/4W (EXCEPT KE400S)
R923	1-249-423-11	CARBON	3.3K	5%	1/4W
R924	1-247-868-11	CARBON	36K	5%	1/4W (KE400S)
R924	1-249-427-11	CARBON	6.8K	5%	1/4W (KE300,RX300)
R925	1-247-836-11	CARBON	1.6K	5%	1/4W (KE400S)
R926	1-249-421-11	CARBON	2.2K	5%	1/4W (KE400S)

< VARIABLE RESISTOR >

RV111	1-241-630-11	RES, ADJ, CARBON 10K (RECORD LEVEL L)
RV211	1-241-630-11	RES, ADJ, CARBON 10K (RECORD LEVEL R)
RV901	1-223-604-11	RES, VAR, CARBON 10K/10K (REC LEVEL)
RV902	1-223-605-11	RES, VAR, CARBON 20K/20K (BALANCE)

Ref. No.	Part No.	Description	Remark
		< SWITCH >	
S901	1-554-303-21	SWITCH, TACTILE (❚❚ PAUSE)	
S902	1-554-303-21	SWITCH, TACTILE (◀◀ ▷ AMS ▶▶)	(RX300)
S903	1-554-303-21	SWITCH, TACTILE (◀◀ ▷ AMS ▶▶)	(EXCEPT RX300)
S904	1-554-303-21	SWITCH, TACTILE (◀◀ ▷ AMS ▶▶)	(RX300)
S905	1-554-303-21	SWITCH, TACTILE (○ REC MUTE)	
S906	1-554-303-21	SWITCH, TACTILE (RESET)	
S907	1-554-303-21	SWITCH, TACTILE (MEMORY)	
S908	1-554-303-21	SWITCH, TACTILE (■)	
S909	1-554-303-21	SWITCH, TACTILE (◀◀)	
S910	1-554-303-21	SWITCH, TACTILE (▶▶)	
S911	1-554-303-21	SWITCH, TACTILE (● REC)	
S912	1-762-567-11	SWITCH, SLIDE (DIRECTION) (RX300)	
S921	1-554-303-21	SWITCH, TACTILE (AUTO CAL) (EXCEPT KE200)	
S922	1-762-647-11	SWITCH, ROTARY (DOLBY NR) (KE400S)	
S922	1-762-641-11	SWITCH, ROTARY (DOLBY NR) (KE300,RX300)	
S922	1-762-640-11	SWITCH, ROTARY (DOLBY NR) (KE200)	
⚠S930	1-762-581-11	SWITCH, AC POWER PUSH (1 KEY) (POWER)	(EXCEPT US,CND,E)
S931	1-762-580-11	SWITCH, PUSH (1 KEY) (POWER) (US,CND,E)	
		< TRANSFORMER >	
⚠T901	1-426-651-11	TRANSFORMER,POWER (KE200,KE300:	EXCEPT E)
⚠T901	1-426-652-11	TRANSFORMER,POWER (KE300:E)	
⚠T901	1-427-743-11	TRANSFORMER,POWER (RX300)	
⚠T901	1-427-751-11	TRANSFORMER,POWER (KE400S:EXCEPT US)	
⚠T901	1-427-752-11	TRANSFORMER,POWER (KE400S:US)	
		< TEST PIN >	
* TP801	1-560-060-00	PIN, CONNECTOR 2P	
		< VIBRATOR >	
X801	1-577-360-11	VIBRATOR, CERAMIC (6MHz)	

****

MISCELLANEOUS
****

Ref. No.	Part No.	Description	Remark
⚠9	1-569-007-11	ADAPTER, CONVERSION 2P (KE300:E)	
56	1-773-287-11	WIRE (FLAT TYPE) (29 CORE)	
61	1-765-318-11	WIRE (FLAT TYPE) (7 CORE)	
67	1-769-947-11	WIRE (FLAT TYPE) (11 CORE)	
⚠CNP901	1-558-945-21	CORD, POWER (POLAR.SPT-1)	
⚠CNP901	1-575-651-21	CORD, POWER (AEP,G,MY,SP)	
⚠CNP901	1-696-027-11	CORD, POWER (E)	
⚠CNP901	1-696-845-11	CORD, POWER (AUS)	
⚠CNP901	1-751-523-11	CORD, POWER (UK)	
FL901	1-517-173-11	INDICATOR TUBE, FLUORESCENT	(KE200,KE300,RX300)
FL901	1-517-374-11	INDICATOR TUBE, FLUORESCENT (KE400S)	
HE901	1-543-673-11	HEAD, MAGNETIC (ERASE) (EXCEPT RX300)	
HRP901	1-543-919-11	HEAD,MAGNETIC (RECORD/PLAYBACK)	(EXCEPT RX300)
HRPE901	A-2004-527-A	DECK ASSY, HEAD (RECORD/PLAYBACK/ERASE)	(RX300)
M901	X-3363-501-2	MOTOR ASSY,REEL (REEL)	
M902	X-3365-377-2	MOTOR ASSY,CAPSTAN (CAPSTAN)	
⚠S701	1-570-046-21	SWITCH, VOLTAGE CHANGE (E)	
⚠T901	1-426-651-11	TRANSFORMER, POWER	(KE200,KE300:EXCEPT E)
⚠T901	1-426-652-11	TRANSFORMER, POWER (KE300:E)	
⚠T901	1-427-743-11	TRANSFORMER, POWER (RX300)	
⚠T901	1-427-751-11	TRANSFORMER, POWER (KE400S:EXCEPT US)	
⚠T901	1-427-752-11	TRANSFORMER, POWER (KE400S:US)	

****

ACCESSORIES & PACKING MATERIALS
****

Ref. No.	Part No.	Description	Remark
	1-551-734-11	CORD, CONNECTION	
	3-856-130-11	MANUAL, INSTRUCTION (ENGLISH/FRENCH)	(RX300)
	3-856-134-11	MANUAL, INSTRUCTION (ENGLISH/FRENCH/	SPANISH/PORTUGUESE) (AEP)
	3-856-134-21	MANUAL, INSTRUCTION (ENGLISH)	(US,UK,AUS)
	3-856-134-31	MANUAL, INSTRUCTION (GERMAN/DUTCH/	SWEDISH/ITALIAN)(AEP)
	3-856-134-41	MANUAL, INSTRUCTION (GERMAN) (G)	
	3-856-134-51	MANUAL, INSTRUCTION (ENGLISH,FRENCH,	SPANISH,CHINESE) (E,MY,SP)
*	3-931-693-01	INDIVIDUAL CARTON (KE400S:US,AUS)	
*	3-932-083-01	CUSHION	
*	3-935-033-01	INDIVIDUAL CARTON (KE200)	
*	3-935-034-01	INDIVIDUAL CARTON (KE300:AEP,G,MY,SP)	
*	3-935-035-01	INDIVIDUAL CARTON (KE400S:AEP,UK,G)	
*	3-935-036-01	INDIVIDUAL CARTON (RX300)	
*	3-935-090-01	INDIVIDUAL CARTON (KE300:E,AUS)	

****

****
HARDWARE LIST
****

Ref. No.	Part No.	Description	Remark
#1	7-682-548-04	SCREW +BVTT 3X8 (S)	
#2	7-685-871-01	SCREW +BVTT 3X6 (S)	
#3	7-685-872-09	SCREW +BVTT 3X8 (S)	
#4	7-685-646-79	SCREW +BVTP 3X8 TYPE2 N-S	
#5	7-685-862-09	SCREW +BVTT 2.6X6 (S)	
#6	7-685-134-19	SCREW (+ PTPWH) (2.6X8)	
#7	7-621-775-00	SCREW +B 2.6X3	
#8	7-627-556-08	SCREW +P 2.6X2.8	
#9	7-621-772-58	SCREW (+B2X10) (EXCEPT RX300)	

The components identified by mark ⚠ or dotted line with mark ⚠ are critical for safety. Replace only with part number specified.	Les composants identifiés par une marque ⚠ sont critiques pour la sécurité. Ne les remplacer que par une pièce portant le numéro spécifié.

Sony Corporation
Consumer A&V Products Company
Home A&V Products Div.

9-960-660-11

REVISION HISTORY

Clicking the version allows you to jump to the revised page.
Also, clicking the version at the upper right on the revised page allows you to jump to the next revised page.

Ver.	Date	Description of Revision
1.1	2001.05	Silver model added for TC-KE400S. (SFD-01006)
1.0	1996.04	New.