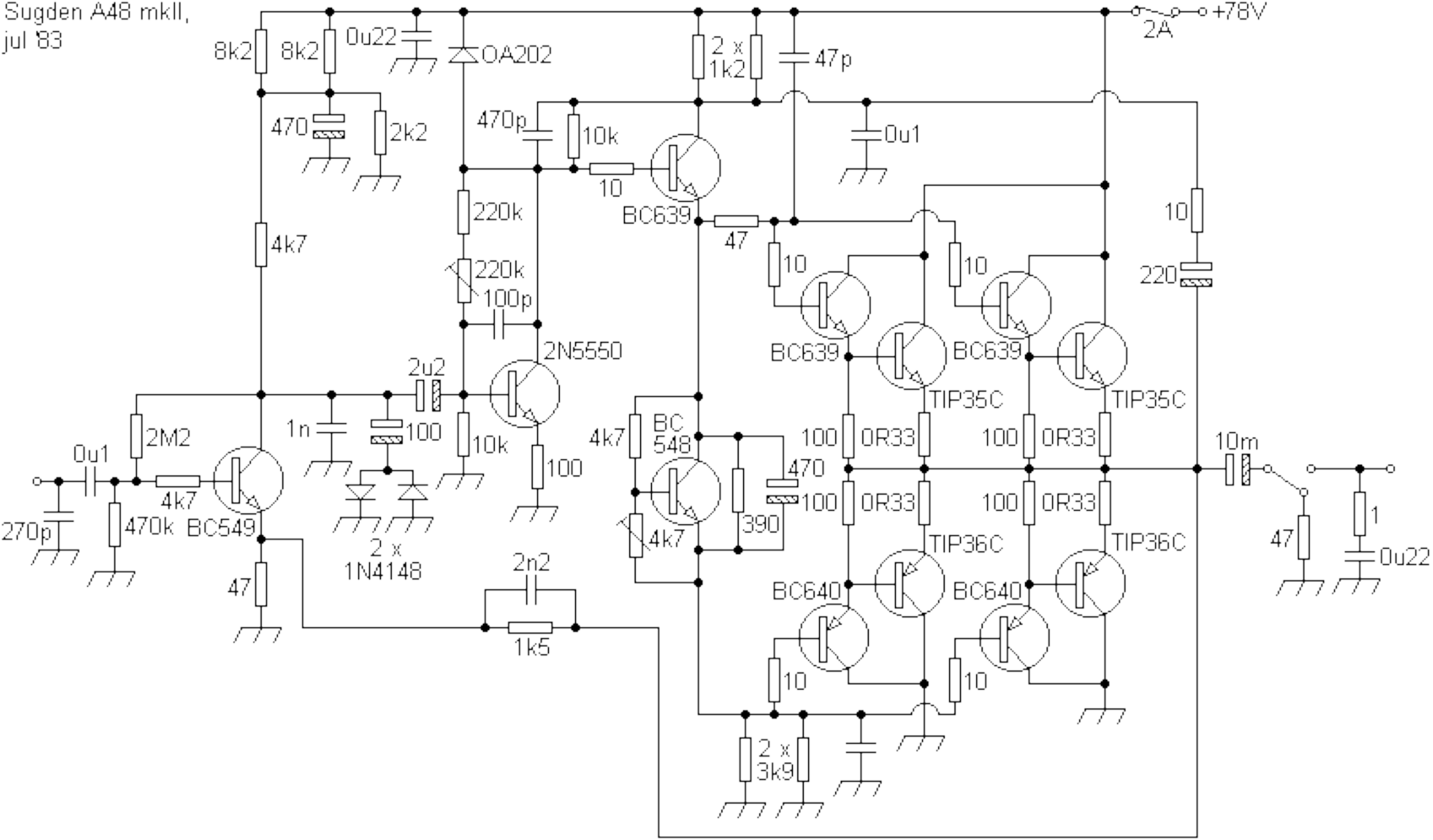Sugden A48 mkII,
jul '83