AM – FM STEREO TUNER MODEL AF – 220

The TRIO Model AF-220 tuner is a quality AM-FM tuner that can be used for both stereophonic and monaural applications. The major feature of this versatility-it provides any mode of operation, be it AM-FM stereo, FM-MPX (multiplex-FM multi-channel broadcasts), or AM or FM monaural reception, by means of a single selector switch, without the need disconnecting or connecting cables and leads.

The FM tuner section incorporates efficient AFC, limiter and Foster-Seely discriminator circuits, and it uses a three-section variable capacitor, thus providing maximum sensitivity and selectivity. The AM tuner section is also equipped with an RF stage uses a three-section variable capacitor, so it provides outstanding performance particularly in regions of weak signal strength.

FEATURES

1. The AM and FM tuners are tow independend sections of the AF-220, so the AF-220 can be used for AM-FM stereophonic broadcasts.
2. By utillzing the ouput from the monaral output jacks, the AF-220 can be used as an ordinary monaural AM-FM tuner.
3. By connectiong an adaptor between the MPX IN and OUT jacks, and setting the selector switch to the desired position, the AF-220 will function either as an MPX tuner, or provide reception of FM-MPX stereo phonic transmissions.
4. Both the AM and the FM tuner sections are comprised of extremely efficient circuits, each using three-section variable capacitors.
5. The bandwidth of the AM tuner may be set to either a SHARP position ro to a wideband HI-FI position.

SPECIFICATIONS OF THE FA-220

Tubes Used: 2-12AT7; 1-6BE6; 1-6AL5; 1-6X4.
Tuning Range FM-80-90 megacycles (or 88-108 megacyces) AM-535-1,605 kilocycles.
Sensitivity: FM-6μv; AM-30μv (both are inputs required for 20 db puieting).
Image Rejection Ratio: FM-45 db; AM-70 db
AFC; Reactance circuit
Ontputs: Monaural (AM, FM, MPX); Stereo (AM-FM, FM-MPX) Multiplex (Input & Output).
Antenna Connections: AM Antenna & FM Antenna connections
Controls: TUNING(AM); TUNING(FM); AFC Defeat Switch; AM Bandwidth Control; Power Switch.
Power Requirements: 100/117 volts, 50/60 cycles, watts
Dimensions: Width-15"x Depth-9½"x Height-4¼"
Weight: 5.45 kilograms (12 lbs)

AMPLIFIER CONNECTIONS

1. Connections To A Stereo Amplifier

There are five output jacks provided on the rear of the amplifier. For AM-FM stereo broadcasts, the two marked RIGHT and LEFT are used. The signal from the LEFT jack is fed to the TUNER INPUT of the LEFT channel amplifier, and the signal from the RIGHT jack is fed to the TUNER INPUT of the RIGHT channel amplifier. The outages voltages of both the AM and the FM luners are appoximately 0.3 volts respectively. When using channel amplifiers with on inputs marked sqecifically for TUNER, the signals from the AF-220 should be applied to the AUX inputs.

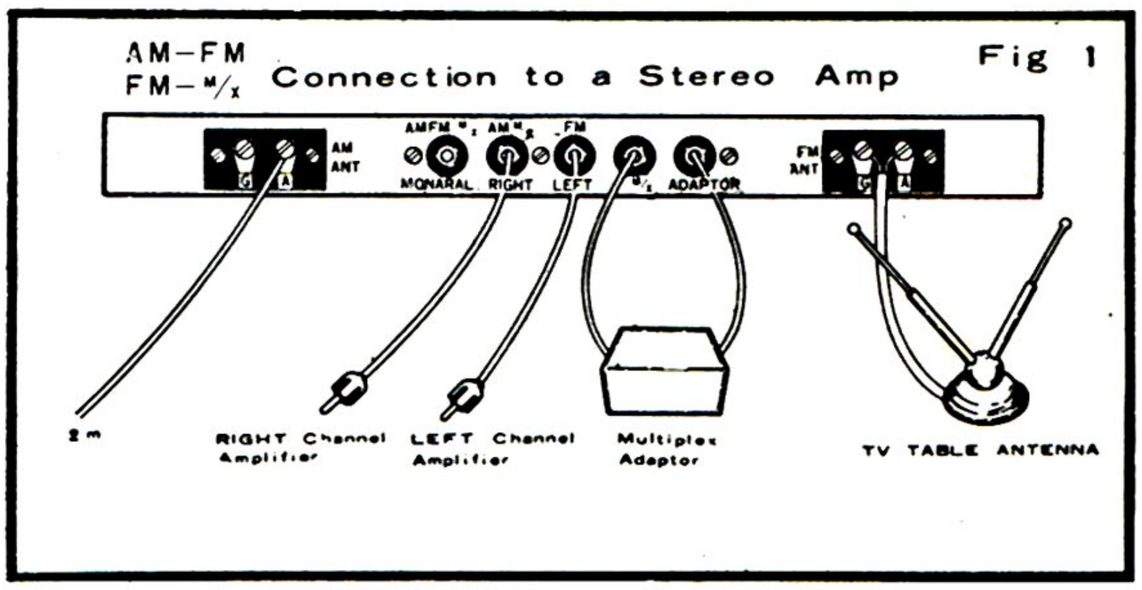

2. Connections To A Monaural (Single Channel) Amplifier

The AF-220 can also be used for monaural reception. In such cases, the monaural output is used. The signal fron this output is connected to the TUNER or the AUX input jack of the amplifier to be used. The shielded coaxial cable provided should be used for making the connections.

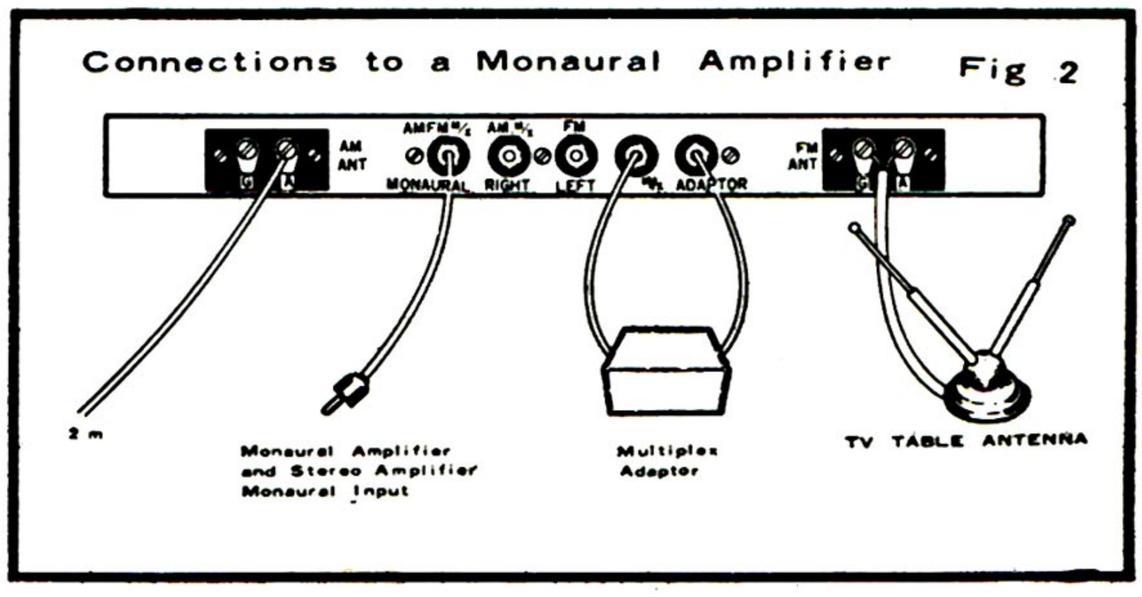

PRINTED IN JAPAN

www.hifiengine.com

ANTENNA CONNECTIONS

1. AM Antenna

A length of wire (ordinary vinyl plastic insulated wire will suffice) connected to the AM ANT terminal should provide adequate results for local reception. For long distance reception, a proper outdoor antenna should be used, together With a good ground connection made to the G. terminal. In reinforced concrete structures, it is possible thet satisfactory results may not be obtained with an indoor antenna a few feet in length. In such ceses, an outdoor antenna mounted at least three feet away from the walls of the building should be used. Alength of wire dangled from a window will not provide satisfactory reception if it lies right against the wall, even though it may be "outdoors"

2. FM Antenna

An indoor TV antenna should be connected to the FM ANT terminals. The elements of the antenna should be extended to their full lengths. In FM reception, the problem of the direction of the antenna arises. The antenna should be moved about while listening to an FM broadcast, and secured in the position providing optimum reception. In lncalities close to the station, a length of wire about 3′ long connected to the

3. Connecting A Multiplex Adaptor

When using the AF-220 for reception fo FM Multiplex Stereo broadcasts, the output from the MPX OUTPUT jack should be connected to the OUTPUT of the adaptor. Once the adaptor is connected in position, simply by setting the SELECTOR SWITCH on the front panel to the FM-MPX position, the output of the multiplex channel will be provided at the RIGHT output jack. When set to the MPX position, the multiplex output will be provided at the MONAURAL OUTPUT jack.
FM ANT terminal will generally provide results (a long wire will not necessarily provide good reception).

CONTROLS

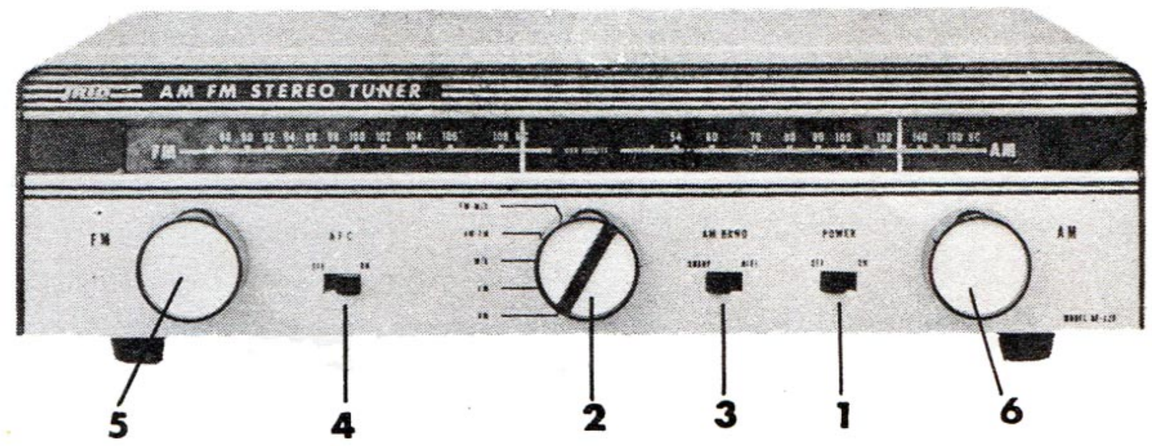

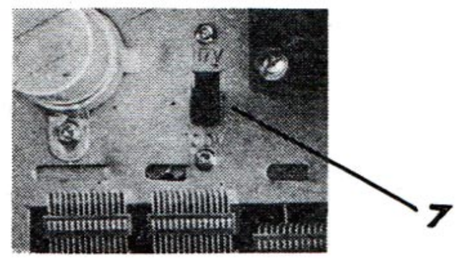

Please refer to Figure.

(1) is the line switch, that turns the tuner on and off.

(2) This is the SELECTOR SWITCH. It provides selection of the mode ot operation-AM, FM, AM-FM, and so on.

(3) is the switch controlling the AM bandwidth, or selectivity. Forlong distance redeption, selectivity is improved when this switch is set to the SHARP position, while for local reception, when set to the HI-FI position, selectivity will be impaired, some hat but high frequency response will be improved.

(4) is the AFC swifch. In FM reception, when this AFC switch is set to the ON position, the tuning point will be widened, and it will be easier to tune in to a station, and, moreover, there will be no "drift" during reception. When tuning in to a weak station that is adjacent on the tuning scale to a powerful station, ther are times when the tuning "locks in" to the powerful station, and the weak station cannot be tuned in. At such times, the weak station should first be tuned in to with this AFC switch set to the OFF position, and then the switch should be set to the ON position after the station has been tuned in.

(5) is the FM tuning control.

(6) is the AM tuning control.

(7) when the outer case is removed, a switch will be found next to the power transformer. This enables the tuner to be operated on a line voltage of either 100 volts or 117 volts.

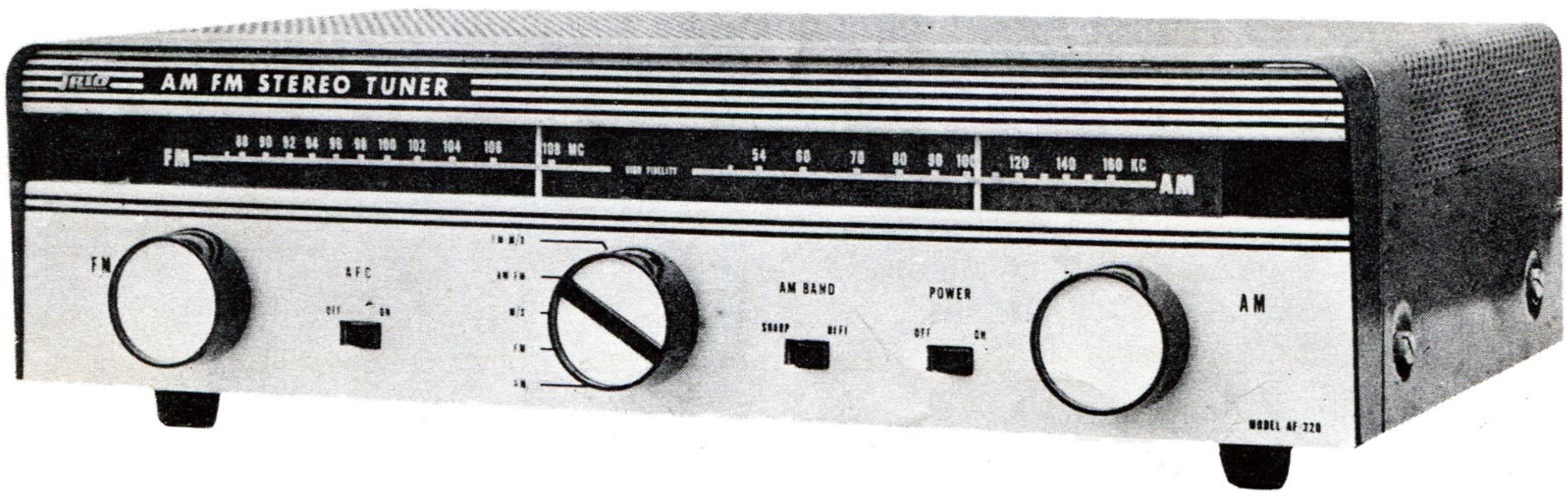

www.hifiengine.com

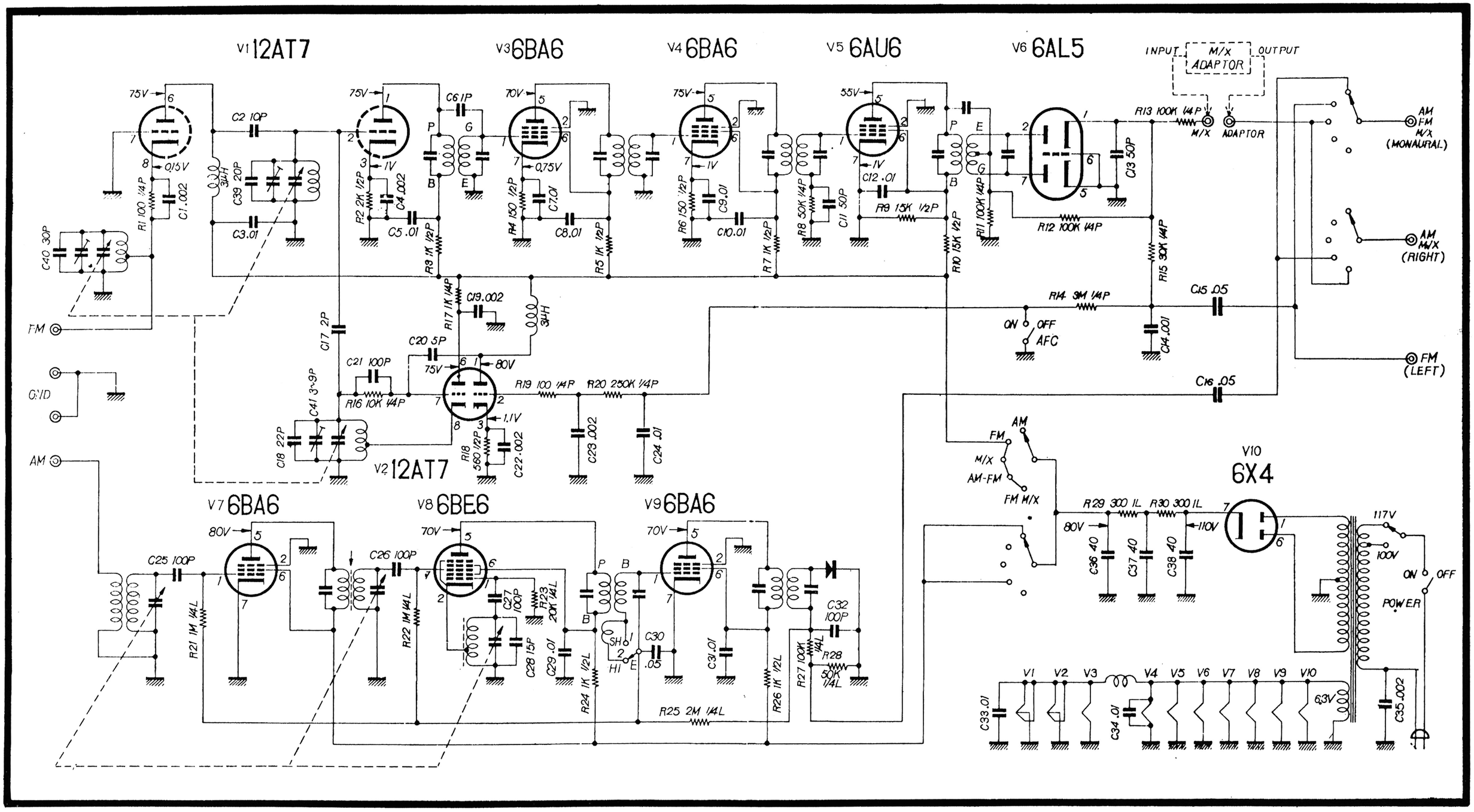
V1 12AT7
V2 12AT7
V3 6BA6
V4 6BA6
V5 6AU6
V6 6AL5
V7 6BA6
V8 6BE6
V9 6BA6
V10 6X4
INPUT
M/X ADAPTOR
OUTPUT
M/X
ADAPTOR
AM FM M/X (MONAURAL)
AM M/X (RIGHT)
FM (LEFT)
FM
GND
AM
ON OFF AFC
AM
FM
M/X
AM-FM
FM M/X
117V
100V
ON OFF
POWER
6.3V
R1 100 1/4P
C1 .002
C2 10P
C3 .01
C39 20P
3μH
C40 30P
C41 3~9P
C18 22P
C17 2P
R2 2K 1/2P
C4 .002
C5 .01
C6 1P
R9 1K 1/2P
R4 150 1/2P
C7 .01
C8 .01
R5 1K 1/2P
R6 150 1/2P
C9 .01
C10 .01
R7 1K 1/2P
R8 50K 1/4P
C11 50P
C12 .01
R9 15K 1/2P
R10 15K 1/2P
R11 100K 1/4P
R12 100K 1/4P
R13 100K 1/4P
C13 50P
R15 30K 1/4P
R14 3M 1/4P
C14 .001
C15 .05
C16 .05
R17 1K 1/4P
C19 .002
3μH
C20 5P
C21 100P
R16 10K 1/4P
R19 100 1/4P
R20 250K 1/4P
R18 560 1/2P
C22 .002
C23 .002
C24 .01
C25 100P
R21 1M 1/4L
C26 100P
R22 1M 1/4L
C27 100P
R23 20K 1/4L
C28 15P
C29 .01
R24 1K 1/2L
SH
HI
C30 .05
C31 .01
R25 2M 1/4L
R26 1K 1/2L
R27 100K 1/4L
C32 100P
R28 50K 1/4L
R29 300 1L
R30 300 1L
C36 40
C37 40
C38 40
C33 .01
C34 .01
C35 .002