Tandberg RADIO

Service manual

TANDBERG

Tape recorder modell 12

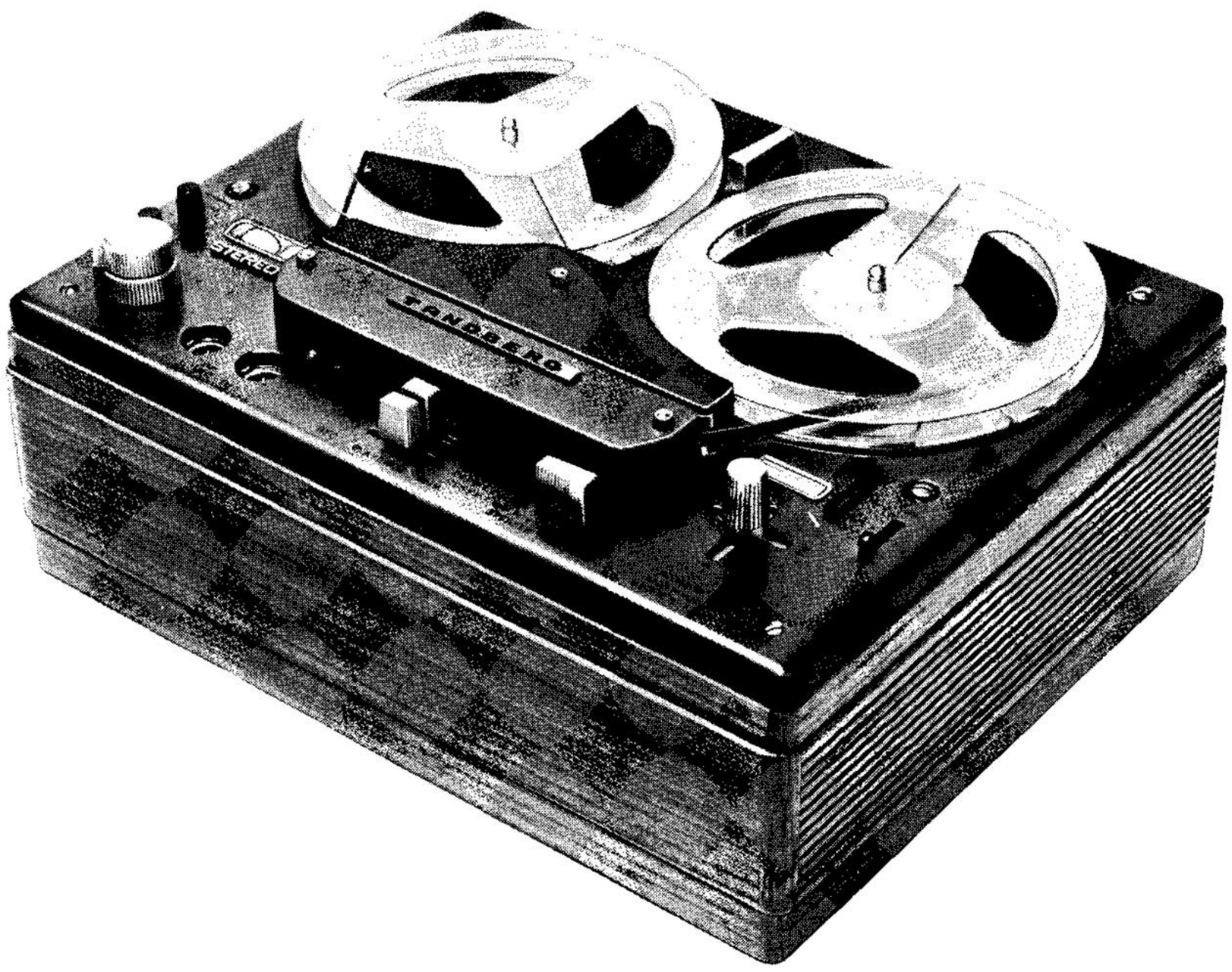

www.hifiengine.com

Preface

This service manual covers the Tandberg tape recorder models 12–4 and 12–2. The model series 12 is a fully transistorised, three speed stereo, record and playback unit with two heads. It is equipped with separate record and playback preamplifiers and separate power amplifiers for each channel. The power output amplifiers are rated for 10 watts each.

The model 12–2 is the two-track version while the model 12–4 is the four-track version. The models 12–2 and 12–4 have exactly the same mechanical system and operating controls.

We hope that everyone concerned with our products will find this service manual useful.

April 1967

www.hifiengine.com

Contents

1.0 Technical specification, Tandberg tape recorder models 12—4 and 12—2 ... 4

2.0 The function of the controls ... 6

3.0 The input and output terminals ... 7

4.0 The mechanism, detailed description and adjustment instruction ... 8

4.1 The operating lever ... 9
- 4.1.1 The motor switch ... 9
- 4.1.2 The eccentric segment ... 10
- 4.1.3 The pressure wheel assembly ... 10
- 4.1.4 The tape brake ... 12
- 4.1.5 The trip bar ... 12

4.2 The turntable assemblies ... 12
- 4.2.1 The supply turntable assembly ... 13
- 4.2.2 The tape tight tension ... 13
- 4.2.3 The take-up turntable assembly ... 14
- 4.2.4 Horizontal and vertical alignments of the turntables 15

4.3 Clutch alignments ... 15
- 4.3.1 General ... 15
- 4.3.2 Fast rewind ... 16
- 4.3.3 Fast wind ... 16
- 4.3.4 Normal forward drive ... 17
- 4.3.5 Neutral ... 17
- 4.3.6 Free ... 18

4.4 The motor pulley ... 18
- 4.4.1 Threading of the rubber drive belt ... 18

4.5 The speed transfer wheel ... 18

4.6 The lifting mechanism ... 19

4.7 The flywheel with the capstan ... 20
- 4.7.1 The brake for the flywheel ... 20

4.8 The speed change mechanism ... 21

4.9 The momentary start-stop feature ... 21

4.10 The pressure pad ... 22

4.11 The automatic end stop switch ... 22

4.12 The revolution counter ... 22

4.13 Assembling the top cover ... 22

5.0 The electronic circuits, detailed description and adjustment instruction ... 24
- 5.1.1 Inputs ... 24
- 5.1.2 The record pre-amplifier ... 25
- 5.1.3 The FM multiplex-filter ... 25
- 5.1.4 The equalizing amplifier in record position ... 25
- 5.1.5 The equalizing amplifier in playback position ... 26
- 5.1.6 The equalizing amplifier in amplifier position ... 27
- 5.1.7 The power output amplifier ... 28
- 5.1.8 The playback pre-amplifier ... 29
- 5.1.9 The record level indicator circuit ... 29
- 5.1.10 The oscillator, bias and erase circuit ... 29
- 5.1.11 The power supply ... 30

5.2 The switching system ... 31
- 5.2.1 The function selector switch ... 31
- 5.2.2 The speaker selector switch ... 32
- 5.2.3 Monaural recording on CH1 or CH2 ... 32
- 5.2.4 Mixing during monaural recording ... 33
- 5.2.5 Stereo recording ... 33
- 5.2.6 Monaural playback, channel 1 or 2 ... 33
- 5.2.7 Stereo playback ... 33
- 5.2.8 Stereo amplifier ... 33
- 5.2.9 Add a track ... 33
- 5.2.10 Sound on sound ... 34

5.3 Head alignment and track control with Tandberg test tape 34
- 5.3.1 The Models 12—4 and 12—2 ... 34
- 5.3.2 The model 12—2 ... 35

5.4 Head alignment without Tandberg test tapes ... 35
- 5.4.1 Demagnetizing ... 35
- 5.4.2 The adjustable tape guides ... 35
- 5.4.3 The record/playback head ... 35
- 5.4.4 The erase head ... 35

5.5 Track control, model 12—4 without Tandberg test tapes .. 35
- 5.5.1 The record/playback head ... 35
- 5.5.2 The erase head ... 35

5.6 Track control, model 12—2 without Tandberg test tapes .. 36
- 5.6.1 The erase head ... 36
- 5.6.2 The record/playback head ... 36

5.7 Electrical adjustments for Tandberg tape recorder models 12—4 and 12—2 ... 36
- 5.7.1 Adjustment of the power output amplifier ... 36
- 5.7.2 Adjustment of the output level ... 36
- 5.7.3 The quiescent current ... 36
- 5.7.4 Adjustment of the FM MX-filter ... 36
- 5.7.5 Control of the frequency response in amp. position 36
- 5.7.6 The bass control ... 36
- 5.7.7 The treble control ... 36
- 5.7.8 Adjustment of the record current and the electronic beam indicator circuits ... 36
- 5.7.9 The electronic beam indicators ... 36
- 5.7.10 The record current ... 36
- 5.7.11 Adjustment of the osc. frequency and the bias .. 37
- 5.7.12 Distortion ... 38
- 5.7.13 Balance adjustment of the pre-amp outputs ... 38
- 5.7.14 Adjustment of the equalization coils L1 and L2 .. 38
- 5.7.15 Control of the recording curves ... 38
- 5.7.16 Control of the playback curves ... 39
- 5.7.17 Control of the total frequency response ... 39
- 5.7.18 Power output control ... 39
- 5.7.19 Speed test ... 39

5.8 Electrical modifications introduced to the tape recorder model 12 ... 40

5.9 Modifications from four-track to two-track models ... 41

5.10 Modifications from 220 volts 50 c/s to 110 volts 60 c/s .. 41

6.0 Parts list ... 41
- 6.0.1 Mechanical parts ... 41
- 6.0.2 Electrical parts ... 46

www.hifiengine.com

1.0 Technical specification, Tandberg tape recorder models 12-4 and 12-2

Power requirements:	220 volts 50 c/s.
Power consumption:	58 watts at 2 × 1,25 watts output power. 100 watts at 2 × 10 watts output power.
Motor:	Four pole.
Tape speed:	7½, 3¾ and $1^7/_8$ inches per second. The amplifiers are equalized to conform with NAB standards.
Playing time:	Four-track recordings on 1200 ft. of tape:
Model 12–4:	Tape speed 7½ i.p.s.: Stereo 2 × 32 min. Mono 4 × 32 min. Tape speed 3¾ i.p.s.: Stereo 2 × 64 min. Mono 4 × 64 min. Tape speed $1^7/_8$ i.p.s.: Stereo 2 × 128 min. Mono 4 × 128 min.
Model 12–4:	Two-track recordings on 1200 ft. of tape: Tape speed 7½ i.p.s.: Stereo 32 min. Mono 2 × 32 min. Tape speed 3¾ i.p.s.: Stereo 64 min. Mono 2 × 64 min. Tape speed $1^7/_8$ i.p.s.: Stereo 128 min. Mono 2 × 128 min.
Fast wind and rewind:	The fast wind or rewind of 1200 ft. of tape takes approx. 2 minutes.
Tape path:	The tape moves from left to right. The heads are positioned with the air gaps pointing towards the front of the tape recorder.
Recording tape:	Maximum reel diameter 7″. Good quality recording tape is recommended.
Automatic stop:	The automatic stop operates during record or playback as well as during fast wind or rewind modes.
Heads:	
Model 12–4:	Quarter-track erase head. Quarter-track combined record and playback head. Air gap: .003 mm (.0012″).
Model 12–2:	Half-track erase head. Half-track combined record and playback head. Air gap: .003 mm (.00012″).
Frequency response:	$7^1/_2$ i.p.s. 30–20.000 c/s (± 2 dB 40–16.000 c/s). 3¾ i.p.s. 30–13.000 c/s (± 2 dB 50–10.000 c/s). $1^7/_8$ i.p.s. 30– 7.000 c/s (± 2 dB 60– 5.000 c/s). In AMPLIFIER position: ± 2 dB 30–16.000 c/s.
Distortion:	The distortion from the record amplifiers is less than .5 %. The distortion from the playback amplifiers is less than .5 %.
Signal to noise ratio Model 12–4:	The signal to noise ratio is better than 55 dB when the tape is recorded to optimum recording level, i.e. nearly closing of the electronic beam indicator (5 % distortion from the tape).
Model 12–2:	The signal to noise ratio is better than 58 dB when the tape is recorded to optimum recording level, i.e. nearly closing of the electronic beam indicator (5 % distortion from the tape).
Crosstalk:	The crosstalk rejection is better than 60 dB at 400 c/s.
Wow and flutter:	Better than .1 % at 7½ i.p.s. tape speed. Better than .15 % at 3¾ i.p.s. tape speed. Better than .25 % at $1^7/_8$ i.p.s. tape speed.
Erase and bias frequency:	The erase and bias frequency is 85,5 kc/s. The even harmonic distortion in the bias current is less than .5 %.
Recording level indicator:	The electronic beam indicators are equipped with damping circuits. The indicator range is 25 dB, plus overload. The indicators are closing at optimum recording level (5 % distortion from the tape).
Inputs:	**2 Microphone inputs (ch. 1 and ch. 2):** Impedance: 200 ohms unbalanced. Sensitivity: 150 μV. Dynamic range + 40 dB. Contacts: 5 pin DIN contacts.

www.hifiengine.com

2 Line inputs (ch. 1 and ch. 2):
HIGH LEVEL:
Impedance: 1 Mohm. Sensitivity: 75 mV. Dynamic range +40 dB. Contacts: Phono contacts and DIN connector marked CR PHONO (pin No. 3 and 5).

LOW LEVEL:
Impedance: 100 kohms. Sensitivity: 7,5 mV. Dynamic range +40 dB. Contacts: Phono contacts and DIN connector marked RADIO (pin No. 1 and 4).

FM-Multiplex inputs:
The model 12 tape recorder is furnished with a FM-Multiplex switch which switches the multiplex filter in or out. The switch controls all inputs.

Outputs:

Playback Preamplifier output:
Internal impedance is 5 kohms. Open circuit output voltage 750 mV, independent of the setting of all switches and controls during playback. Two phono contacts (ch. 1 and ch. 2) are furnished for connection to external power amplifiers.

Low Impedance output:
External impedance is 4 ohms. Two standard telephone jacks (ch. 1 and ch. 2) in parallel with two DIN loudspeaker contacts are furnished for connection to external loudspeakers.

Center Channel output:
Impedance is 82 ohms from each amplifier. Output voltage in record position is 750 mV open circuit. Output voltage in playback position and amplifier position (AMP) is maximum 3 volts open circuit. One standard telephone jack in parallel with one DIN loudspeaker contact are furnished for connection to headphones.

Power output:
Maximum output power is 10 watts in each channel. Two standard telephone jacks (ch. 1 and ch. 2) in parallel with two DIN loudspeaker contacts are furnished for connection to external speakers.

Speakers: Two speakers 7″ × 4″.

Bass control: The bass response can be continuously increased approx. 12 db at 80 c/s during playback or in amplifier mode. This increase of the low frequency amplification will only be presented on the channel which is set for playback or amplification even when the other channel is connected for recording.

Treble control: The treble response can be continuously decreased approx. 15 dB at 15 kc/s during playback or in amplifier mode. Minimum bass and maximum treble correspond to flat frequency response.

Momentary start/stop lever: The momentary start/stop lever starts or stops the recording or playback instantly.

Counter: The 4 digit counter shows the number of revolutions of the take-up turntable.

Tubes models 12–4 and 12–2: 2 EAM 86.

Transistors: 2 pairs of complementary transistors AC 127, AC 128 (alternatively AC 127, AC 152).
2 pairs of matched transistors AD 150 (alternatively AD 149 or STF 213).
10 ea BC 109B, 2 ea BC 114, 6 ea BC 113, 2 ea BC 107B, 2 ea SE 6002, 1 ea TI 3030, 4 ea 2848/2.

Rectifiers: Bridge rectifiers:
1 ea B 40 C 3200.
1 ea B 250 C 75/30 KP.

Dimensions: In teak cabinet $15^{3}/_{8}$″ long, $11^{13}/_{16}$″ wide and $6^{7}/_{8}$″ high.

Weight: Approx. 23 lbs.

www.hifiengine.com

2.0 The function of the controls

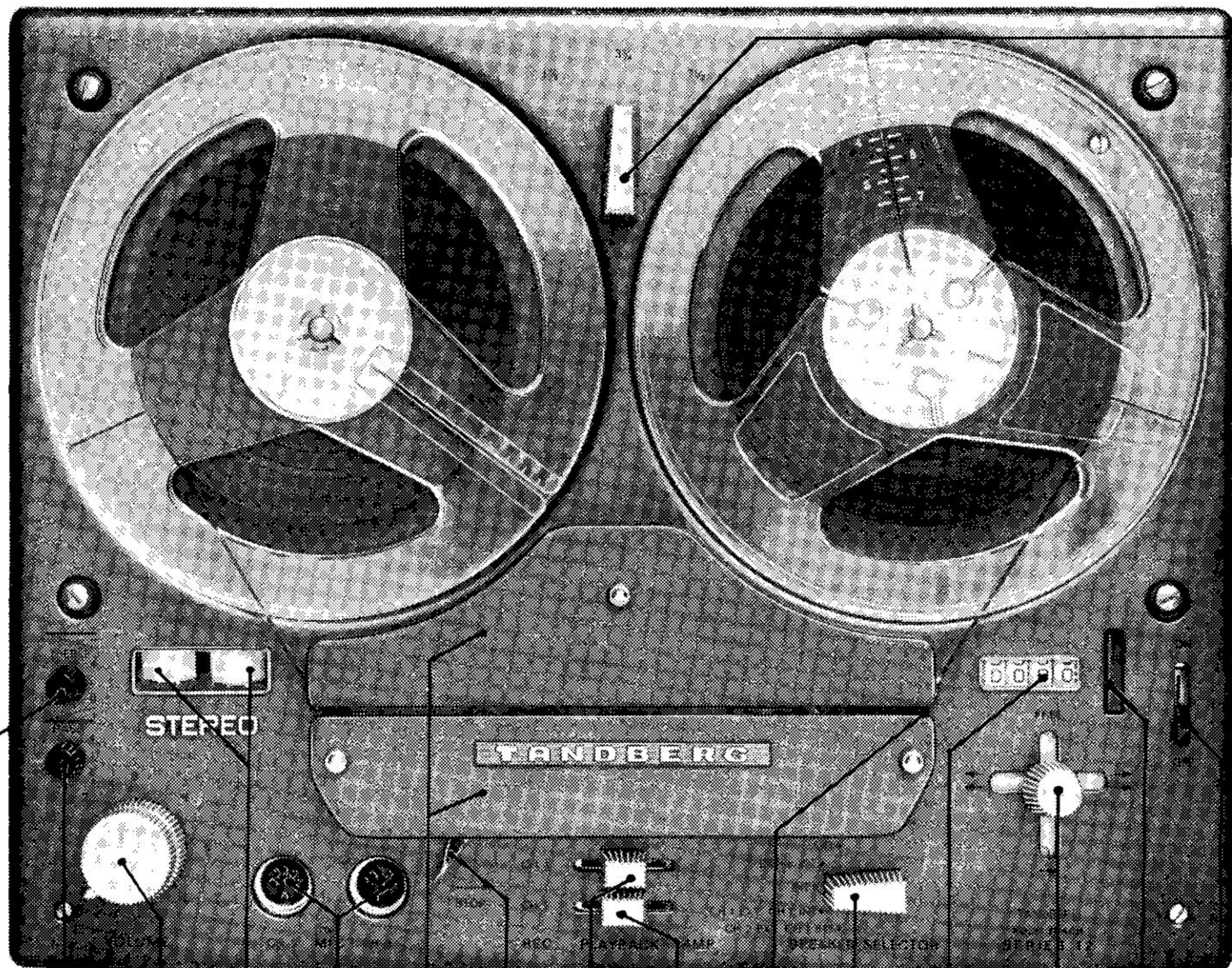

Fig. 1. The operating controls.

1. Treble control: Decreases the treble continuously. Maximum treble decrease is approx. 15 dB at 15 kc/s. The treble control is operative during playback and in AMP position.

2. Bass control: Increases the bass continuously. Maximum bass increase is approx. 12 dB at 80 c/s. The bass control is operative during playback and in AMP position.

3. Volume controls: Controls the recording gain in record mode and the output volume in playback mode.
Upper knob: Channel 1 ((Upper track).
Lower knob: Channel 2 (Lower track).

4. Record level indicators: Indicates the recording level. Optimum recording level is obtained when the electronic beam indicators are nearly closed.
Left indicator: Channel 1 (upper track).
Right indicator: Channel 2 (lower track).

5. Microphone inputs: Low impedance inputs (200 ohms) channel 1 and channel 2.

6. Front and rear trim covers: Remove the trim covers to clean or demagnetize the heads.

7. Momentary start/ stop lever: Stops the recording or playback instantly when the lever is moved to the right position. The record or playback will start immediately when the lever is moved to left position.

8. Function selector switch, channel 1: Activates the electronic circuits for record, playback or amplifier mode, channel 1.

www.hifiengine.com

9. Function selector switch channel 2: Activates the electronic circuits for record, playback or amplifier mode, channel 2.

10. Automatic end stop switch: Stops the motor when the tape runs out or if the tape breaks.

11. Speaker selector switch.

EXT: External speakers only.

EXT + INT: External and internal speakers.

INT: Internal speakers only.

CH1 EXT, CH2 INT: The output from CH1 is connected to both external speaker terminals. The output from CH2 is connected to both internal speakers.

CH2 EXT, CH1 INT: The output from CH2 is connected to both external speaker terminals. The output from CH1 is connected to both internal speakers.

12. Tape counter: Indicates the position of the tape.

13. Operating lever: Activates the mechanism in the tape recorder for the different modes of operation.

14. Re-set push button: Re-sets the tape counter to zero.

15. Power switch: Switches the mains on or off.

16. Speed selector: Selects the required tape speed.

3.0 The input and output terminals

The input and output terminals together with the FM-MX filter and the pre-amplifier balance adjustment are located at the rear of the tape recorder ref. fig. 2 and 3.

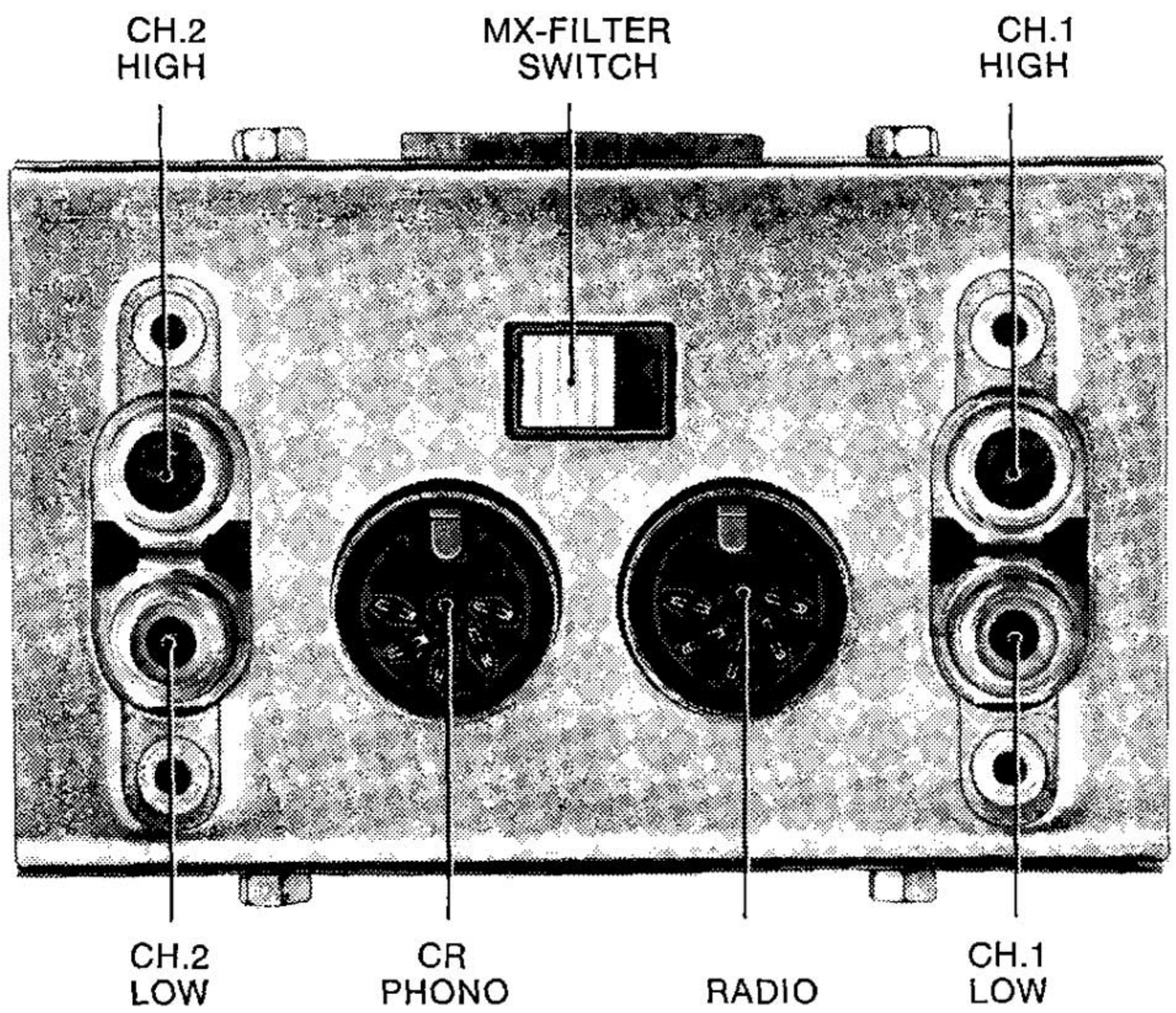

Fig. 2. The input terminals and the FM-MX filter switch.

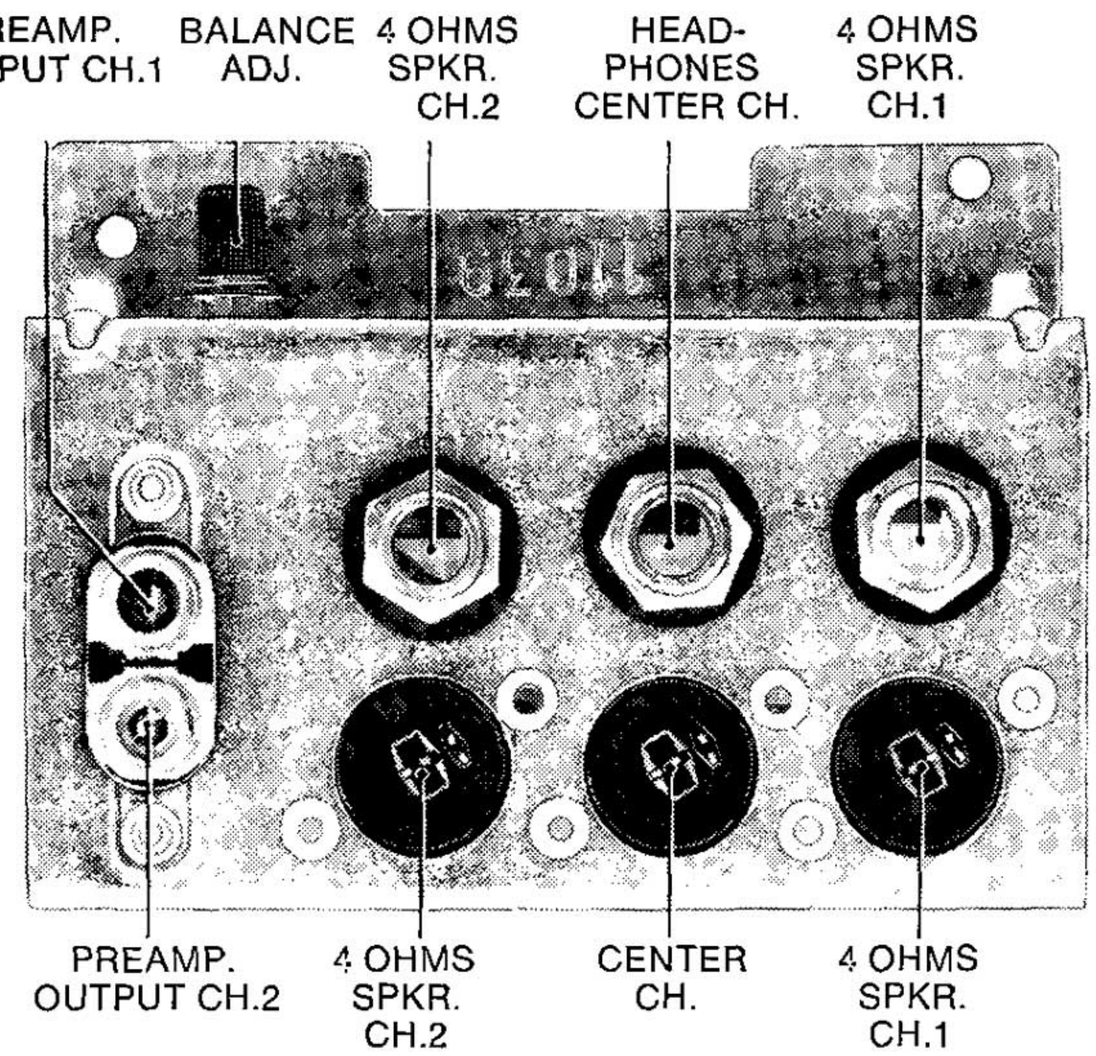

Fig. 3. The output terminals and the balance adjustment.

www.hifiengine.com

MICROPHONE INPUTS

The model series 12 is available with two different microphone contacts.

The European version is furnished with DIN connectors ref. fig. 4.

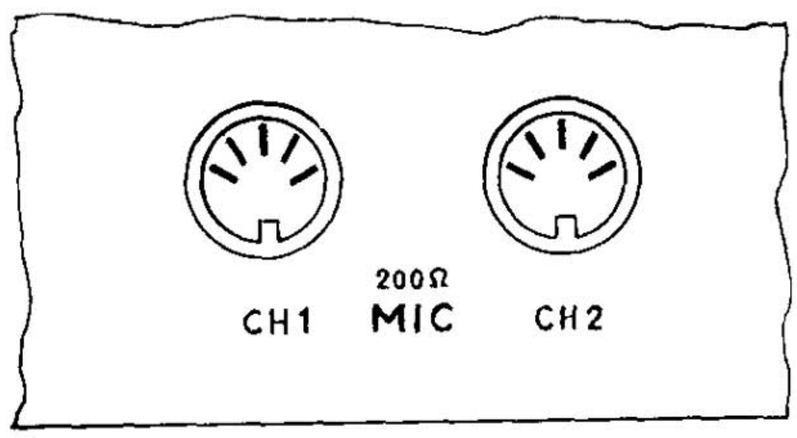

Fig. 4.

The US version is furnished with standard telephone jacks ref. fig. 5.

Both versions have the same specification: Input impedance 200 ohms unbalanced, input sensitivity 150 μV.

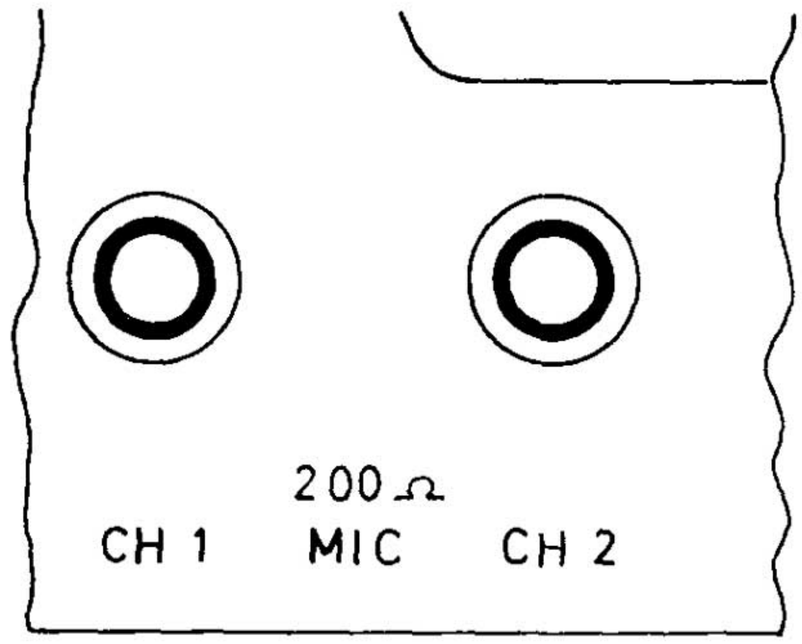

Fig. 5.

4.0 The mechanism, detailed description and adjustment instruction

The main function of the mechanical system is to drive the turntables and the capstan in the different modes of tape motion. The mechanical function is activated by the operating lever.

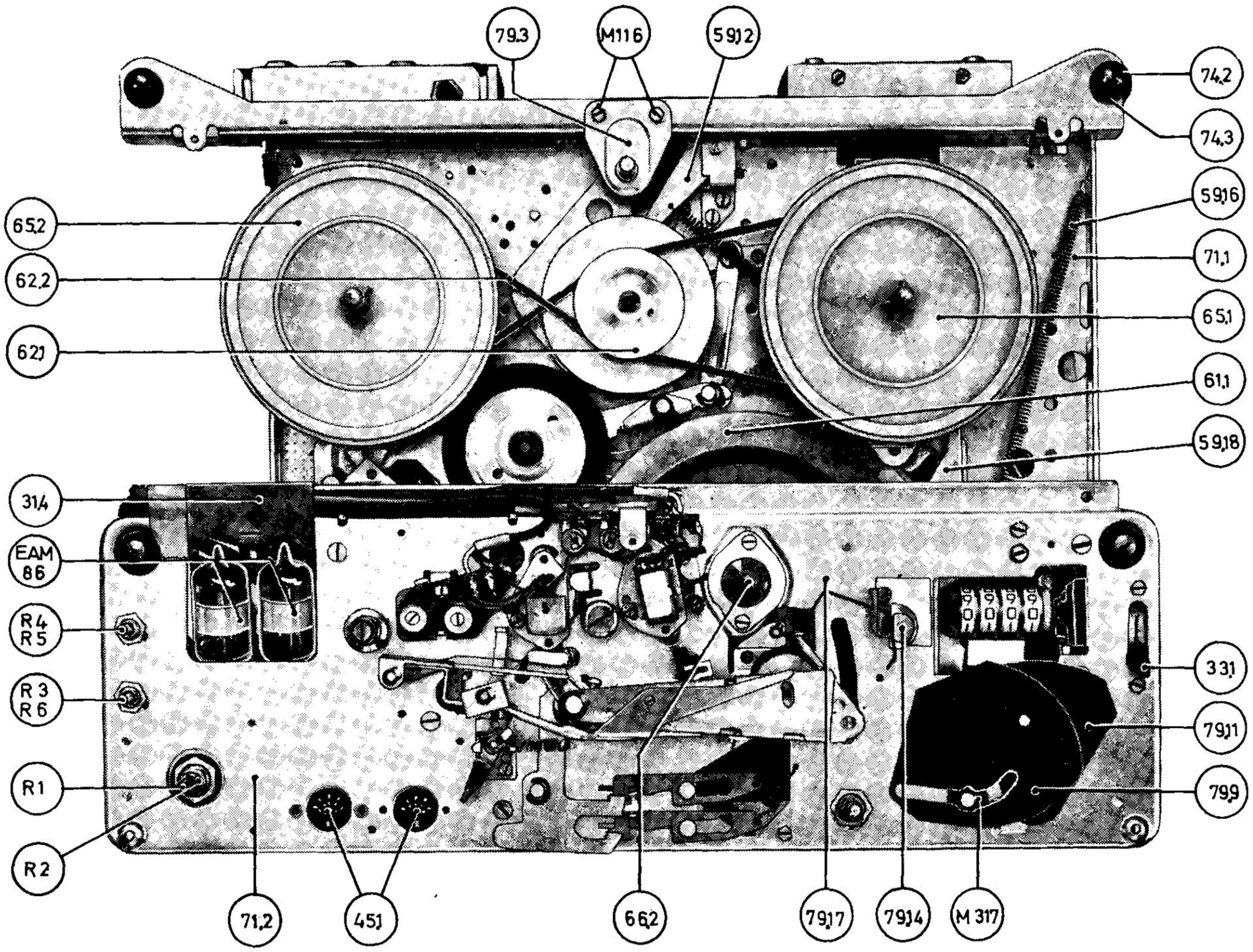

Fig. 6. Top view, with top cover removed.

www.hifiengine.com

4.1 THE OPERATING LEVER

The operating lever (54.1) has five positions and is located at the right front corner of the tape recorder: Normal forward drive, fast forward drive, fast rewind, free, and neutral.

The operating lever activates the following parts:

The motor switch (33.2): disconnects the power to the motor (14.1) in neutral or free position of the operating lever, and activates the electronic beam indicator in normal forward drive, when the tape recorder is set to record mode.

The eccentric segment (59.17): guides the pressure wheel assembly (51.3) and the lifting arm (59.18).

The trip bar (52.1): activates the clutches under both turntables (65.1, 65.2).

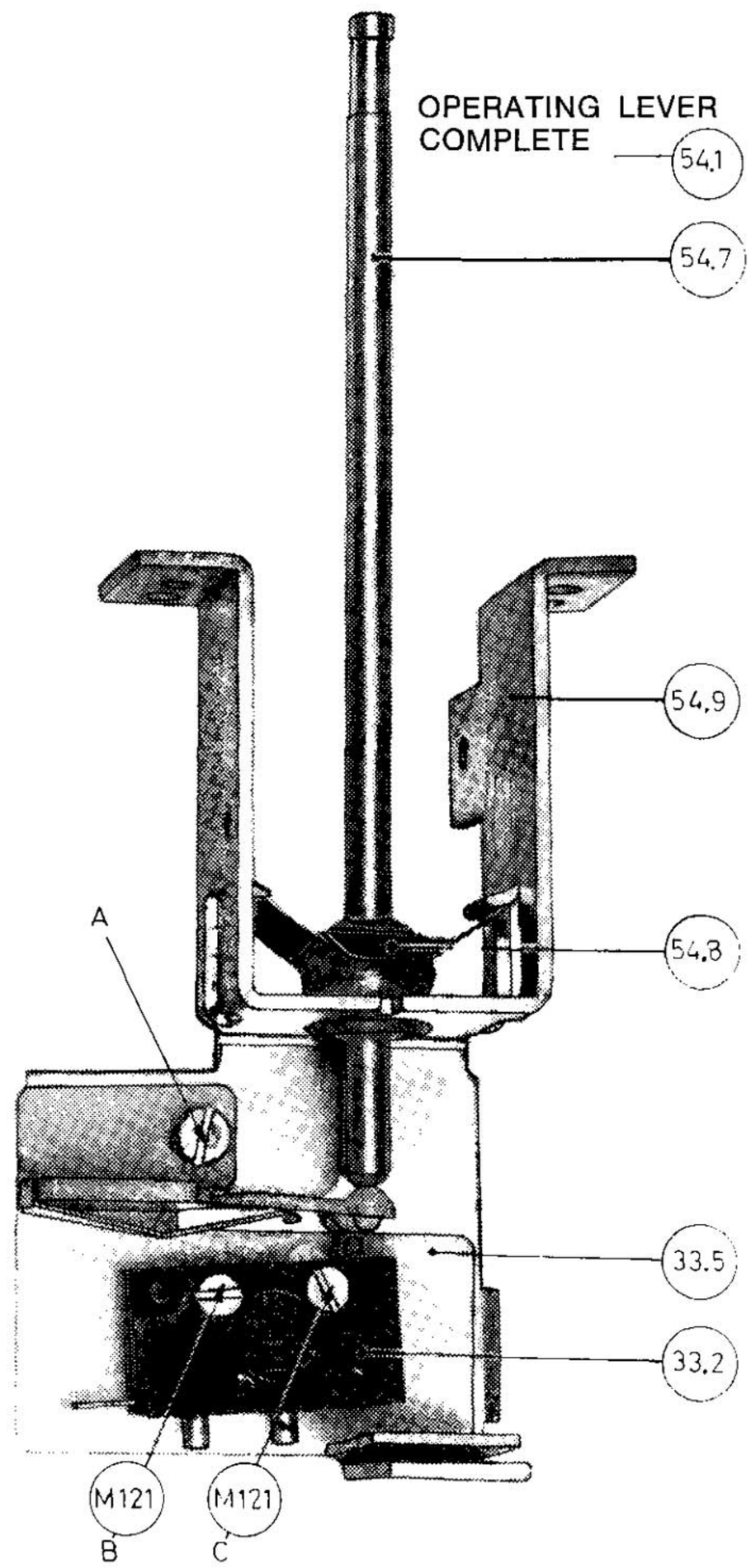

Fig. 7. The operating lever.

4.1.1 The motor switch

The microswitch (33.2) is located on the bracket (54.9) for the operating lever, ref. fig. 7. The switch is connected in series with the motor current and is activated by the operating lever (54.1) to shut off the motor in neutral or free position. The motor switch also disconnects the power to the electronic beam indicators in neutral or free position when the function selector switches are set to record.

Adjustments

The operating point of the microswitch (33.2) should be set according to fig. 8. The motor should start when the operating lever (54.1) is moved from neutral to either normal forward, fast wind or fast rewind position. Unscrew the three screws A, B, and C ref. fig. 7. Adjust the horizontal position of the delrin bracket (33.5) and the vertical position of the microswitch (33.2) obtaining proper positions for correct operating point.

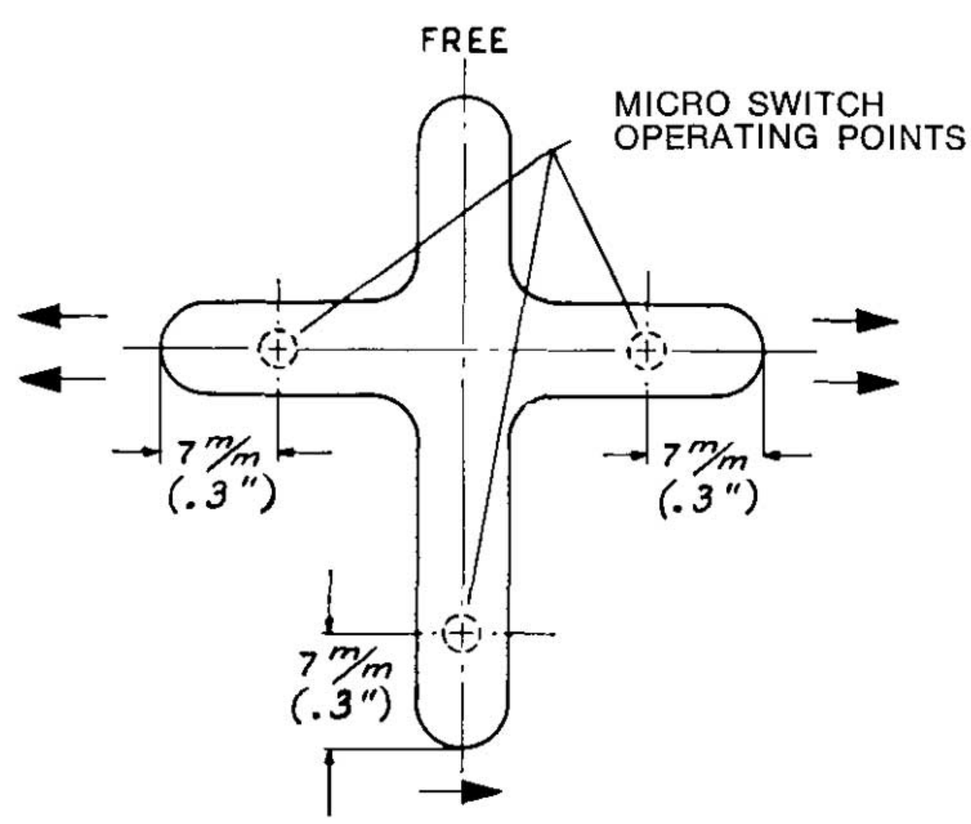

Fig. 8. Adjustment of the operating points for the microswitch.

www.hifiengine.com

4.1.2 The eccentric segment

The eccentric segment (59.17) is located underneath the upper mounting plate (71.2), and is connected to the operating lever (54.1). Ref. fig. 9 and 10.
The eccentric segment (59.17) moves the pressure wheel assembly (51.3) with the pressure wheel (51.1) against the capstan (66.2) when the operating lever (54.1) is being set to normal forward drive.
The lifting arm (59.18) is linked to the eccentric segment (59.17) and releases the speed transfer wheel (53.1) from contacting the motor pulley (62.1) in all operating modes, except in the normal forward drive position.

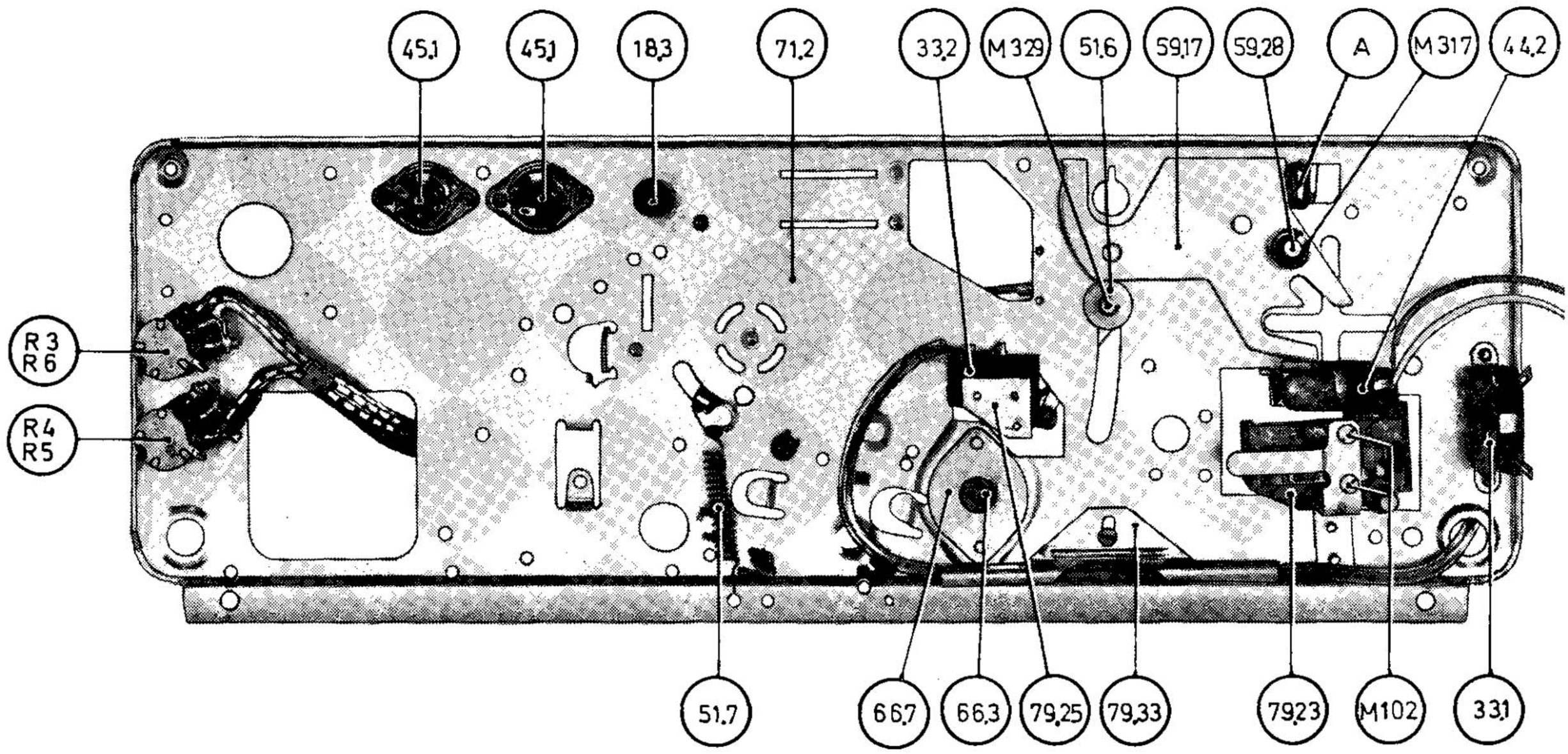

Fig. 9. The upper mounting plate, bottom view.

Adjustments

Adjust the return motion of the pressure wheel assembly (51.3) by bending the lug (A) ref. fig. 9 to ascertain easy threading of the tape in the slot between the two trim covers (73.1, 73.2). The tape should not stick against the pressure wheel (51.1) during the threading.

4.1.3 The pressure wheel assembly

The pressure wheel assembly (51.3) is guided into operating position by the eccentric segment (59.17) when the operating lever (54.1) is moved to normal forward drive.
The pressure wheel (51.1) is mounted under balanced spring tension, with the pressure wheel shaft (51.2) running through two oblong slots in the pressure wheel bracket (51.12). This mounting gives the pressure wheel (51.1) approx. 6 mm (¼") horizontal springloaded play, on a line perpendicular to the front of the upper mounting plate (71.2). Ref. fig. 10.

Adjustments

The balanced spring tension of the pressure wheel (51.1) is adjusted to obtain uniform pressure of the pressure wheel against the capstan. Loosen screw E, and turn the spring equalization latch (51.11) clockwise or counter clockwise until the tape runs smoothly by the pressure wheel (51.1) in normal forward drive. Make sure that no air-pockets are formed between the tape and the pressure wheel (51.1) and that the tape is completely covered by the rubber surface of the pressure wheel. Ref. fig. 10 and 11.

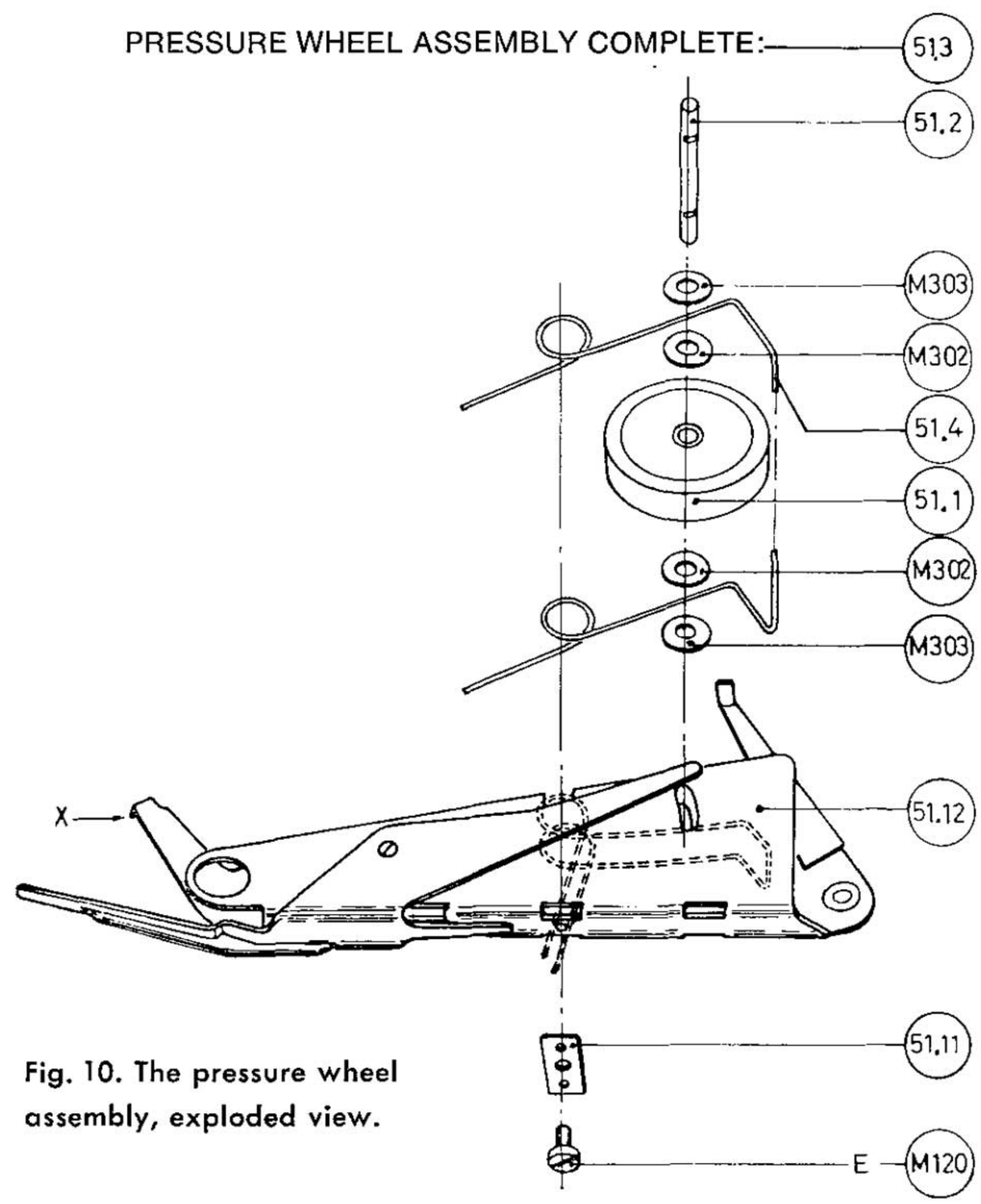

Fig. 10. The pressure wheel assembly, exploded view.

www.hifiengine.com

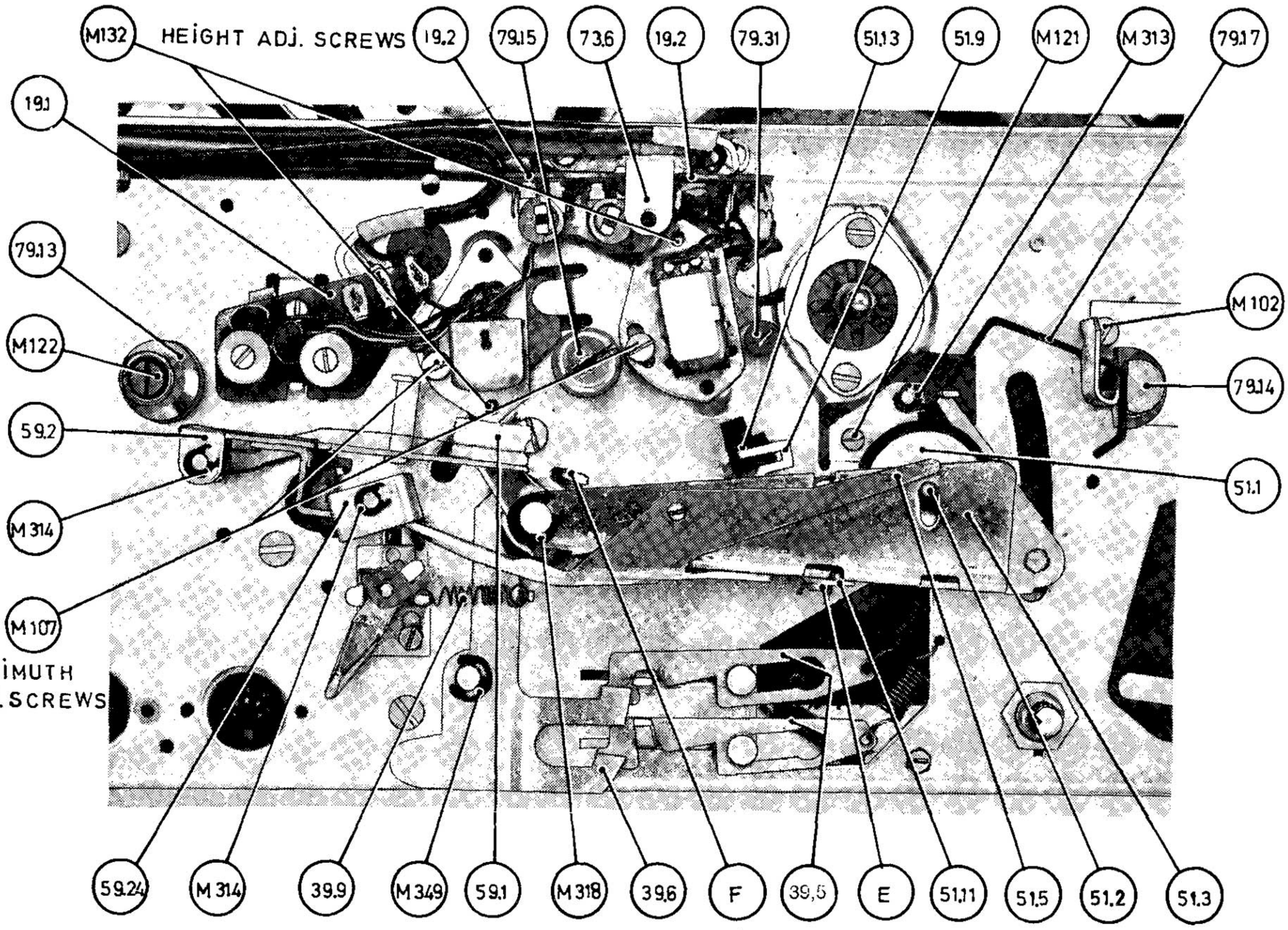

Fig. 11. Mounting of the heads with the pressure wheel assembly.

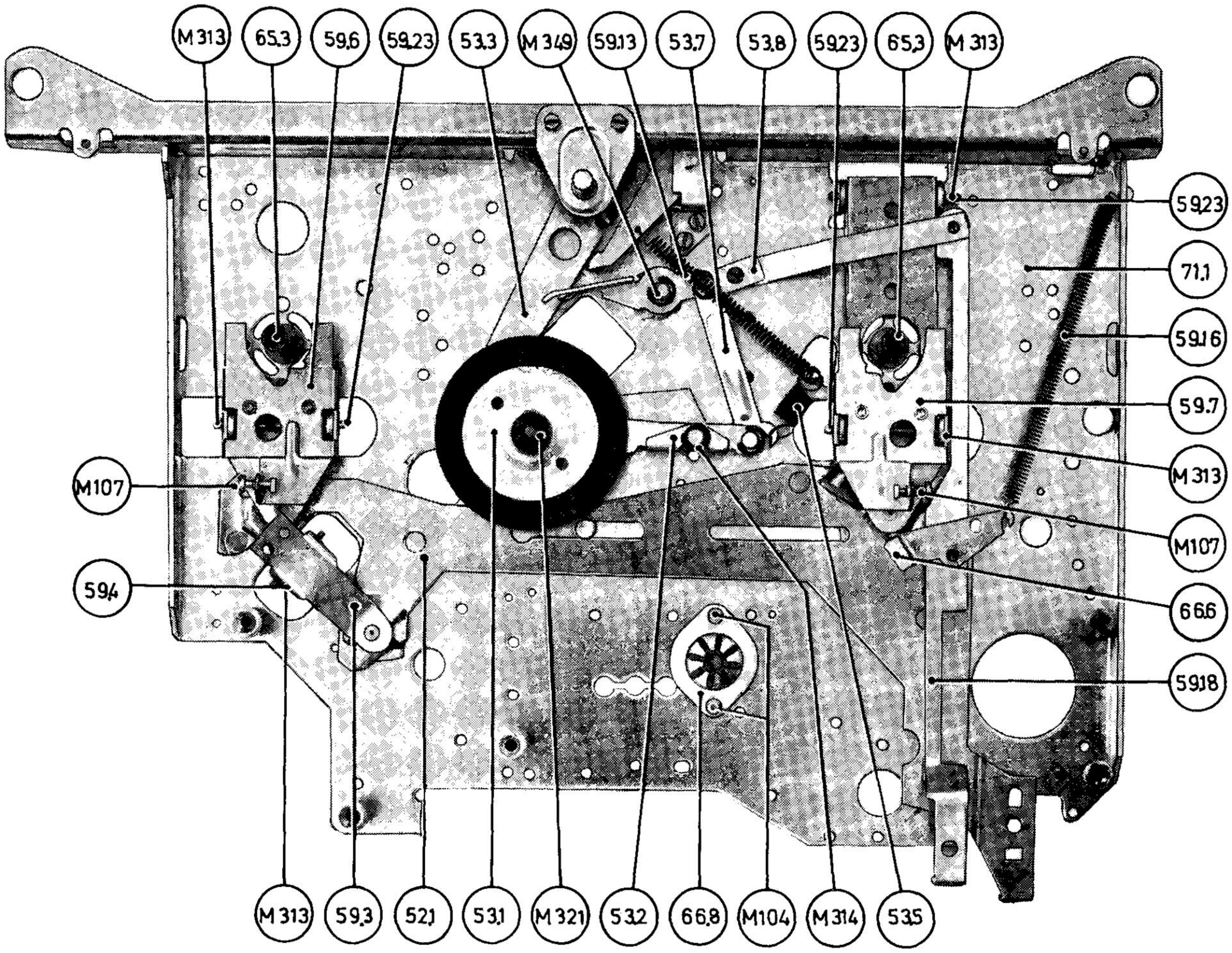

Fig. 12. The lower mounting plate, with the turntables removed.

www.hifiengine.com

4.1.4 The tape brake

The tape brake (51.9) is located inside the pressure wheel assembly (51.3) and is activated by the pressure wheel lever (51.5). Ref. fig. 11. The tape brake (51.9) prevents the tape from creeping when the operating lever (54.1) is in normal forward drive, with the momentary start-stop lever in stop position (right position).

Adjustments

Set the operating lever (54.1) to normal forward drive and the momentary start-stop lever to the stop position, with tape inserted. The tape brake (51.9) should prevent the tape from creeping when the pressure pad arm (59.2) is pulled away from the erase head. Start the mechanism by moving the momentary start-stop lever to the left position. The tape brake (51.9) should be completely disengaged. Adjust the screw F until the spacing between the tape brake (51.9) and the record/playback head is approx. 2 mm (.08″).

4.1.5 The trip bar

The trip bar (52.1) is located across the lower mounting plate (71.1), and linked to the operating lever (54.1). Ref. fig. 12. The trip bar activates the clutches underneath both turntables (65.1, 65.2) by a sliding motion. The vertical position of the two clutches is determined by the raised areas of the trip bar (52.1).

4.2 THE TURNTABLE ASSEMBLIES

The design of the turntable assemblies is shown in fig. 13 and 16. The turntable assemblies are built up around the two housings for the turntable bearings (65.3). The housings for the turntable bearings (65.3) are riveted to the lower mounting plate (71.1).

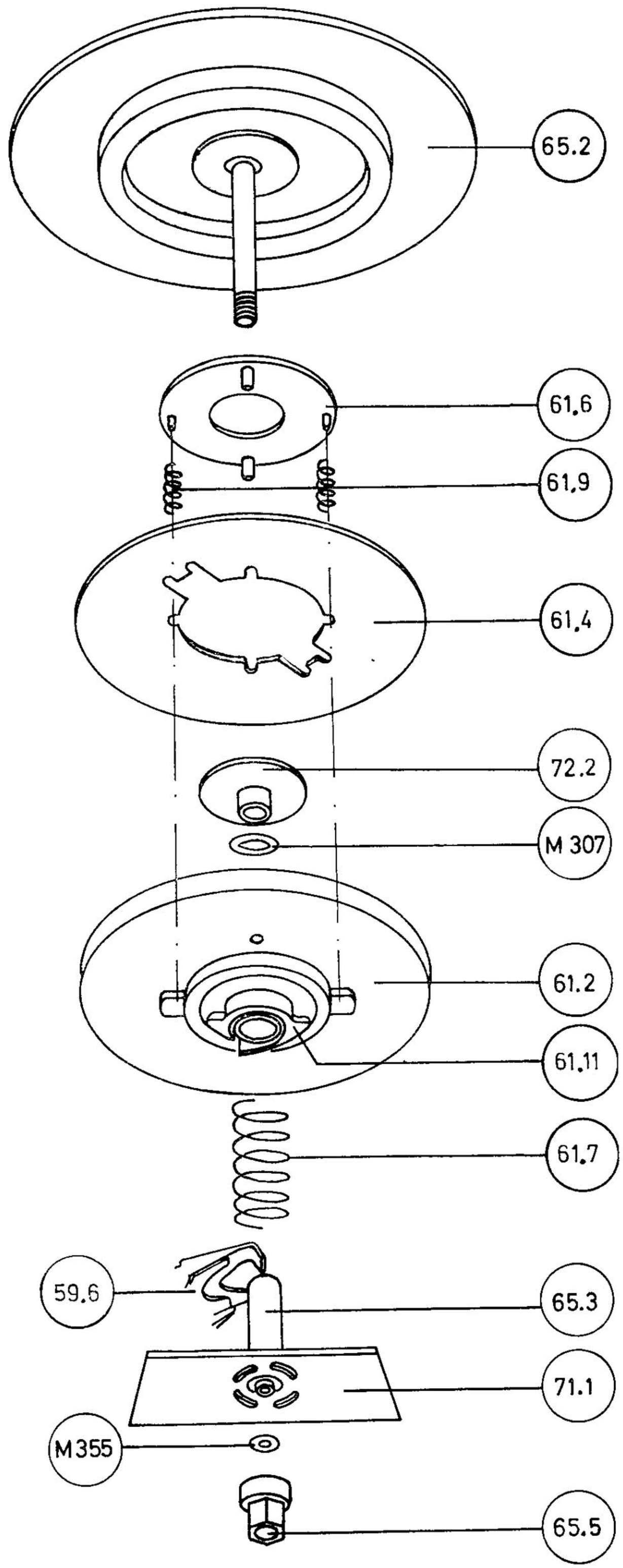

Fig. 13. The supply turntable assembly, exploded view.

www.hifiengine.com

4.2.1 The supply turntable assembly

The supply turntable assembly is put together by first inserting the helical compression spring (61.7) and the pulley disc (61.2) over the housing (65.3). Make sure that the compression spring (61.7) fits into the sylindrical groove in the cartridge (61.11). The two delrin lugs and the tongue on the cartridge (61.11) should lie on a line perpendicular to the front edge of the upper mounting plate (71.2), with the delrin tongue pointing towards the front. Press down the pulley disc (61.2) until the delrin lugs on the cartridge (61.11) have passed through the notch in the clutch lever (59.6). Turn the cartridge (61.11) 90° counter clockwise. Make sure that the two delrin lugs have been locked in position by the claws on the clutch lever (59.6), and that the tongue on the cartridge (61.11) fits into the groove in the clutch lever (59.6). Ref. fig. 13 and 14.

Insert the flange for the turntable housing (72.2) by pressing it into the upper end of the housing (65.3). Place the mylar sheet (61.4) on the top of the pulley disc (61.2), and insert the two springs (61.9) in the wells. Attach the tape tight disc (61.6) with the short pins inside the two springs (61.9) and insert the turntable (65.2). Ref. fig. 15.

Move the operating lever (54.1) to the fast wind position. This will allow the supply turntable (65.2) to rest on the flange (72.2). Insert one teflon washer (M355) on the turntable shaft, under the lower mounting plate (71.1), before the delrin nut (65.5)is attached. Ascertain an axial play in the turntable shaft of approx. 0.1 mm (.04″).

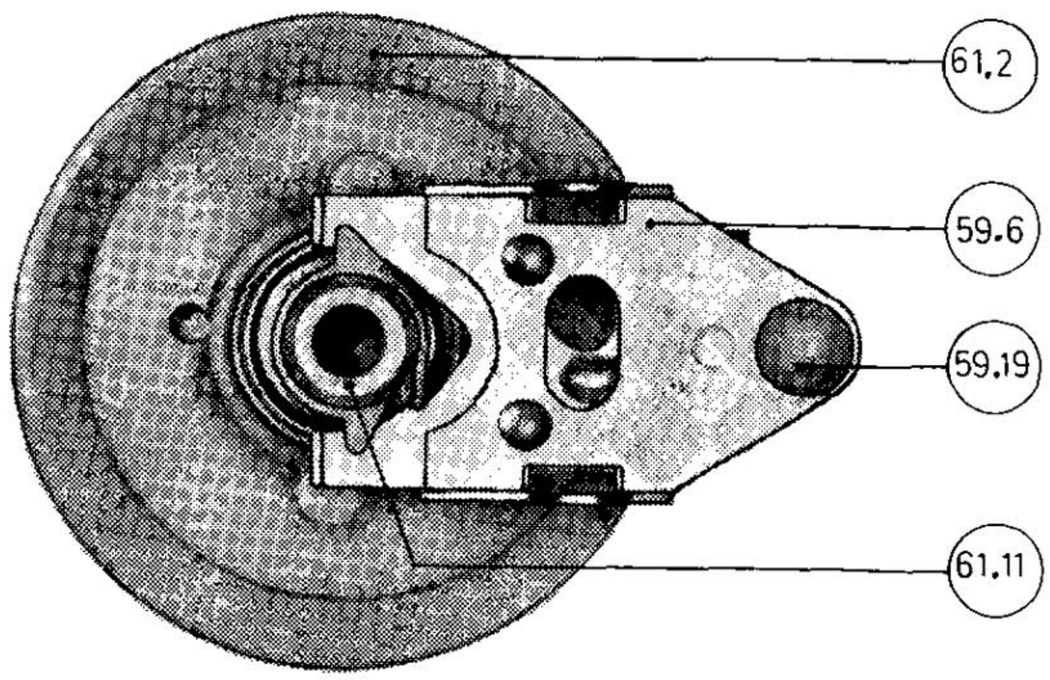

Fig. 14. The supply pulley disc with the clutch lever.

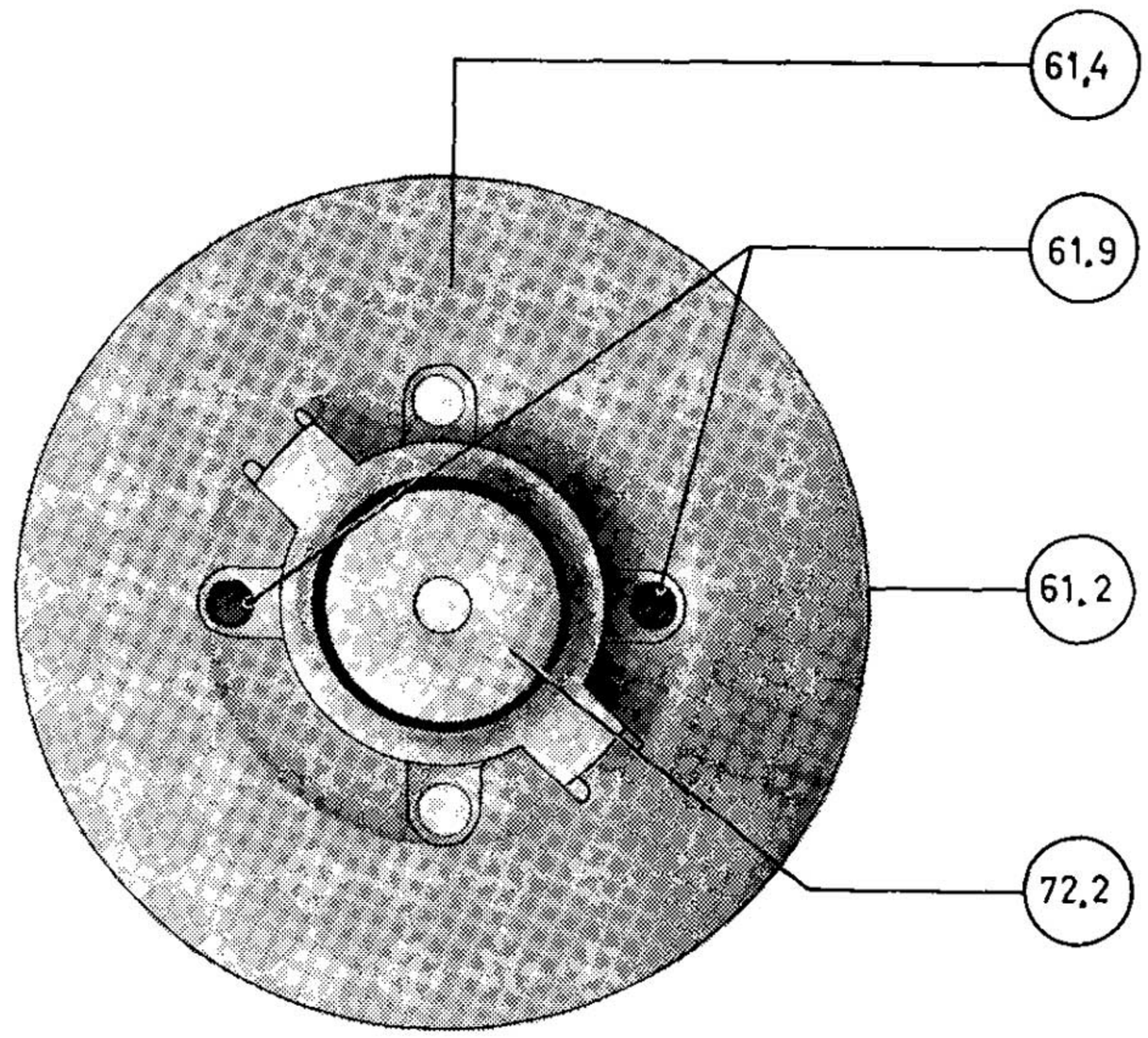

Fig. 15. The supply pulley disc with the mylar sheet.

4.2.2 The tape tight tension

A slight permanent clockwise torque of the supply turntable (65.2) has been introduced to prevent a tape loop from being formed between the supply turntable (65.2) and the trim covers (73.1, 73.2) when the operating lever is in normal forward drive, and the start-stop lever is operated. The tape tight disc (61.6) is a spring loaded friction disc that presses against a green felt washer underneath the supply turntable (65.2), ref. fig. 13.

Adjustments

The adjustment is made by stretching or cutting the two springs (61.9). The torque should be just sufficient to take up the loop formed when the operating lever is in normal forward drive, and the tape recorder stopped by the momentary start-stop lever. The tape recorder should be loaded with a full 7″ tape reel on the supply turntable (65.2).

Note: Do not increase this torque unnecessarily, as excessive torque might introduce wow and flutter.

www.hifiengine.com

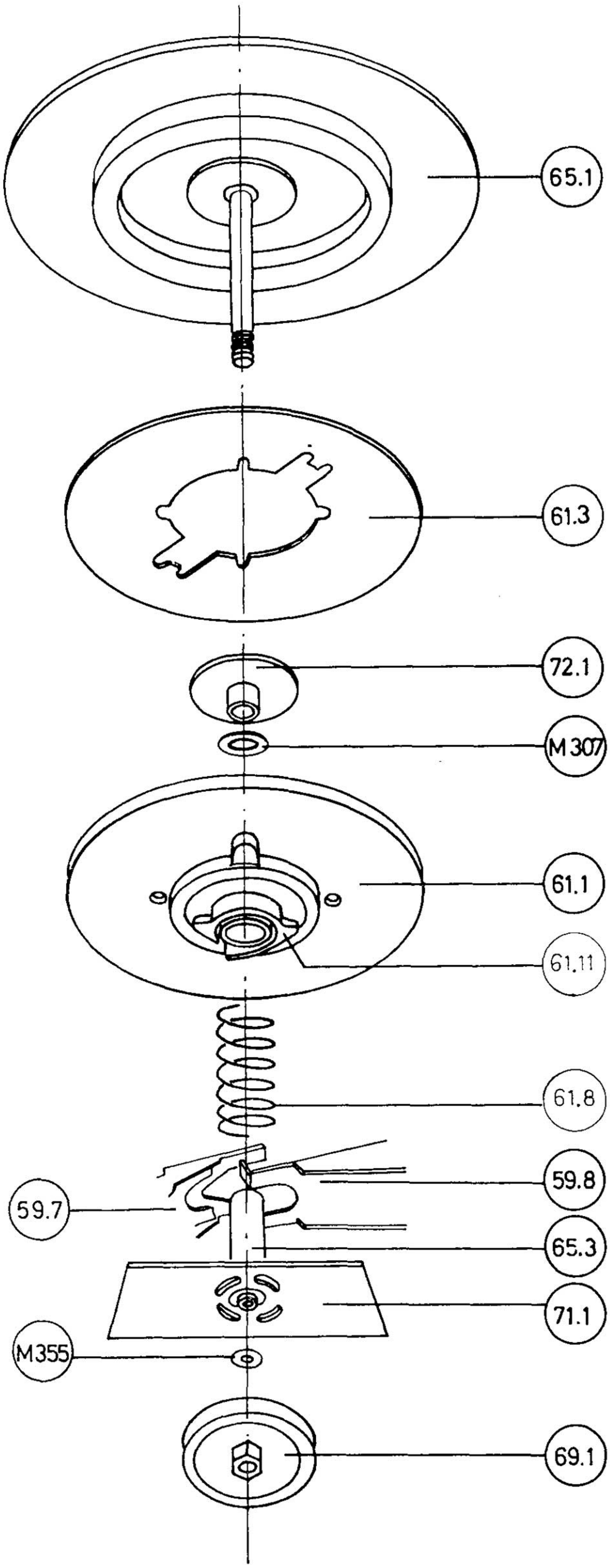

Fig. 16. The take-up turntable assembly, exploded view.

4.2.3 The take-up turntable assembly

The take-up turntable is put together by first inserting the helical compression spring (61.8) and the pulley disc (61.1) over the housing (65.3). Make sure the compression spring (61.8) fits into the sylindrical groove in the cartridge (61.11). The two delrin lugs and the tongue on the cartridge (61.11), should lie on a line perpendicular to the front edge of the upper mounting plate (71.2), with the delrin tongue pointing at the rear edge of the lower mounting plate (71.1). Press down the pulley disc (61.1) until the delrin lugs on the cartridge (61.11) have passed through the notch in the upper clutch lever (59.7). Press the lower clutch lever (59.8) all the way down by using a screw driver. The space between the two clutch levers (59.7, 59.8) will now be approx. 6 mm (¼"). Turn the cartridge (61.11) 90° clockwise, and make sure that the two delrin lugs have been locked in position by the claws one the lower clutch lever (59.8). Ref. fig. 16 and 17.

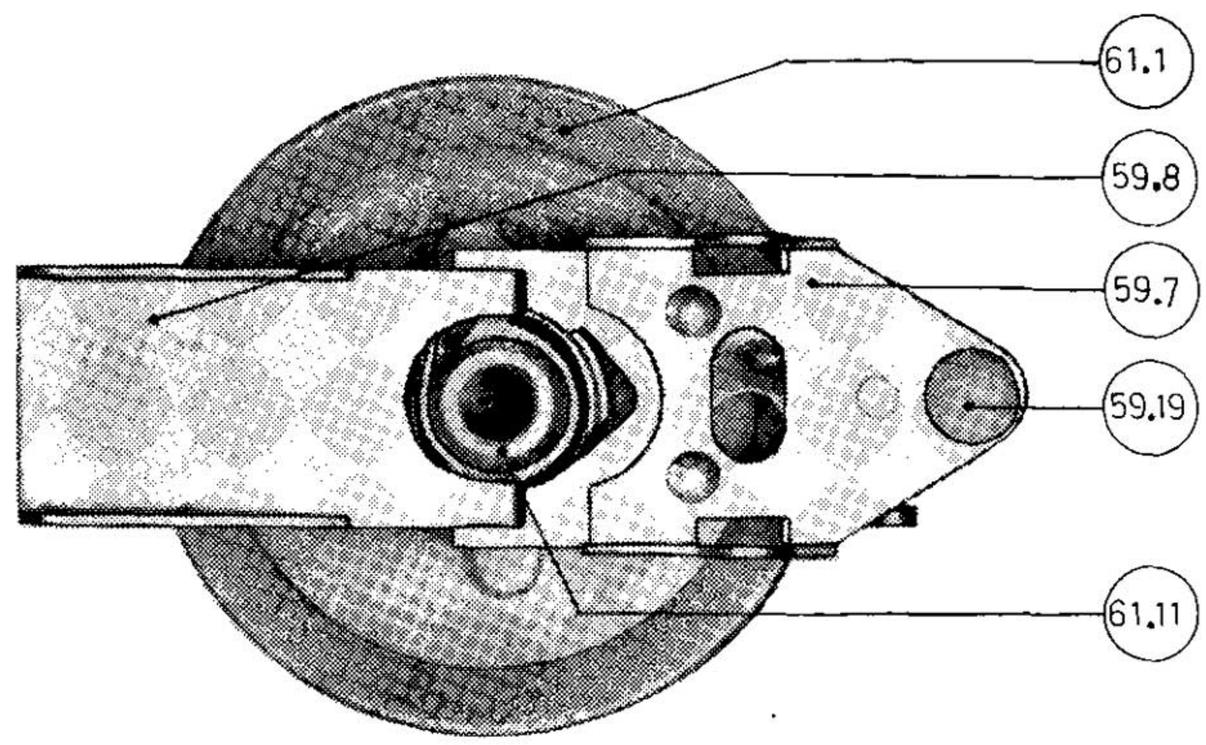

Fig. 17. The take-up pulley disc with the clutch lever.

Insert the flange for the turntable housing (72.1) by pressing it into the upper end of the housing (65.3) and insert the turntable (65.1).
Move the operating lever (54.1) to the fast rewind position. This will allow the take-up turntable (65.1) to rest on the flange (72.1). Insert one teflon washer (M355) on the turntable shaft, under the lower mounting plate (71.1) before the pulley (69.1) is attached. Ascertain an axial play of the turntable shaft of approx. 0.1 mm (.04").

www.hifiengine.com

4.2.4 Horizontal and vertical alignments of the turntables

Use the special tools 1, 2, and 3 for these alignments. Ref. fig. 65.

Horizontal alignments

The horizontal position of the two turntables (65.1, 65.2) parallel to the lower mounting plate (71.1) is checked by placing the special tool No. 1 across both turntables as shown in fig. 18. There should be no spacing between the ruler (tool No. 1) and the turntables.

Necessary adjustments are made by bending the turntable housing in correct position. Use the special tool No. 3, as shown in fig. 19.

The horizontal position of both turntables (65.1, 65.2), parallel to a line perpendicular to the front edge of the upper mounting plate (71.2) is checked by using the special tool No. 2.

The edge of the special tool No. 2 should run exactly into the tape groove in the guide (79.13, 79.14), when the operating lever (54.1) is in the neutral position. Ref. fig. 20.

Necessary adjustments are made by bending the turntable housing (65.3) in correct position. Use special tool No. 3, as shown in fig. 19.

Vertical alignments

The horizontal position of the turntables must be set before the vertical alignment is made.

The vertical position of the turntables is checked with the tape threaded on the recorder. The tape should not touch the edges of the plastic reels in any mode of operation.

The turntables are raised or lowered, if necessary, by adding or subtracting turbax washers (M306-7) between the flange for the turntable housing (72.1, 72.2) and the turntable housing (65.3). Ref. fig. 13 and 16.

A final check of the horizontal position of the turntables should be made.

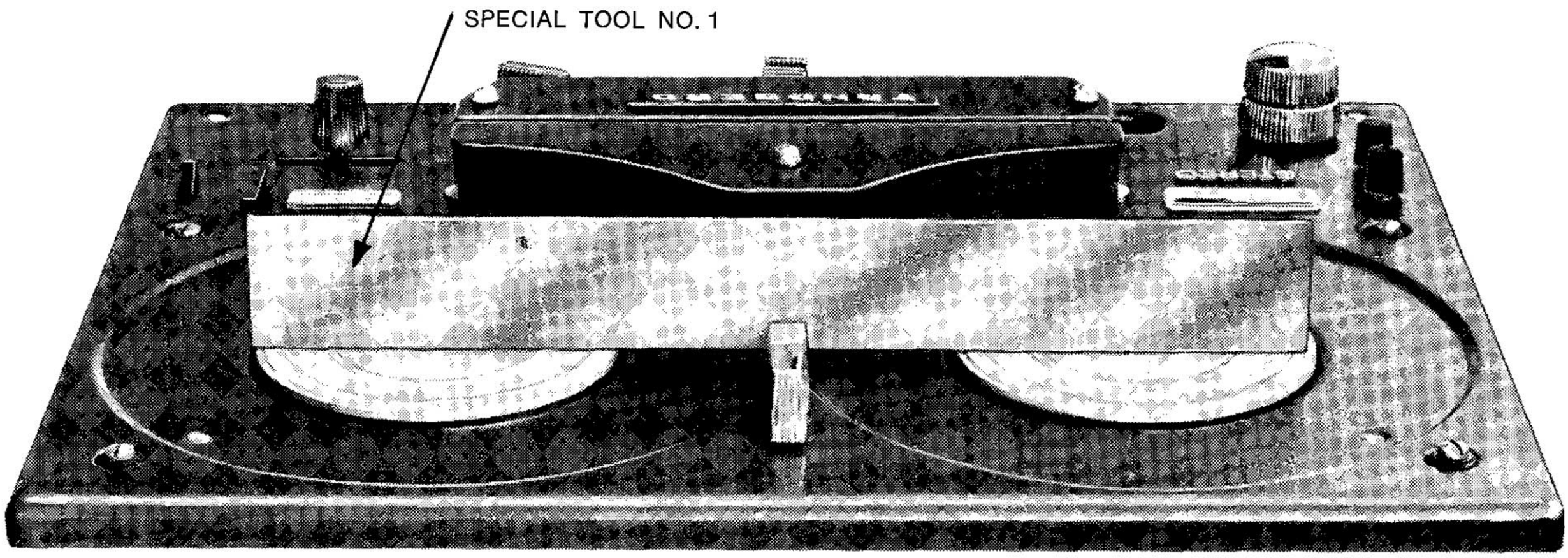

Fig. 18. Control of the horizontal position of the turntables with tool No. 1.

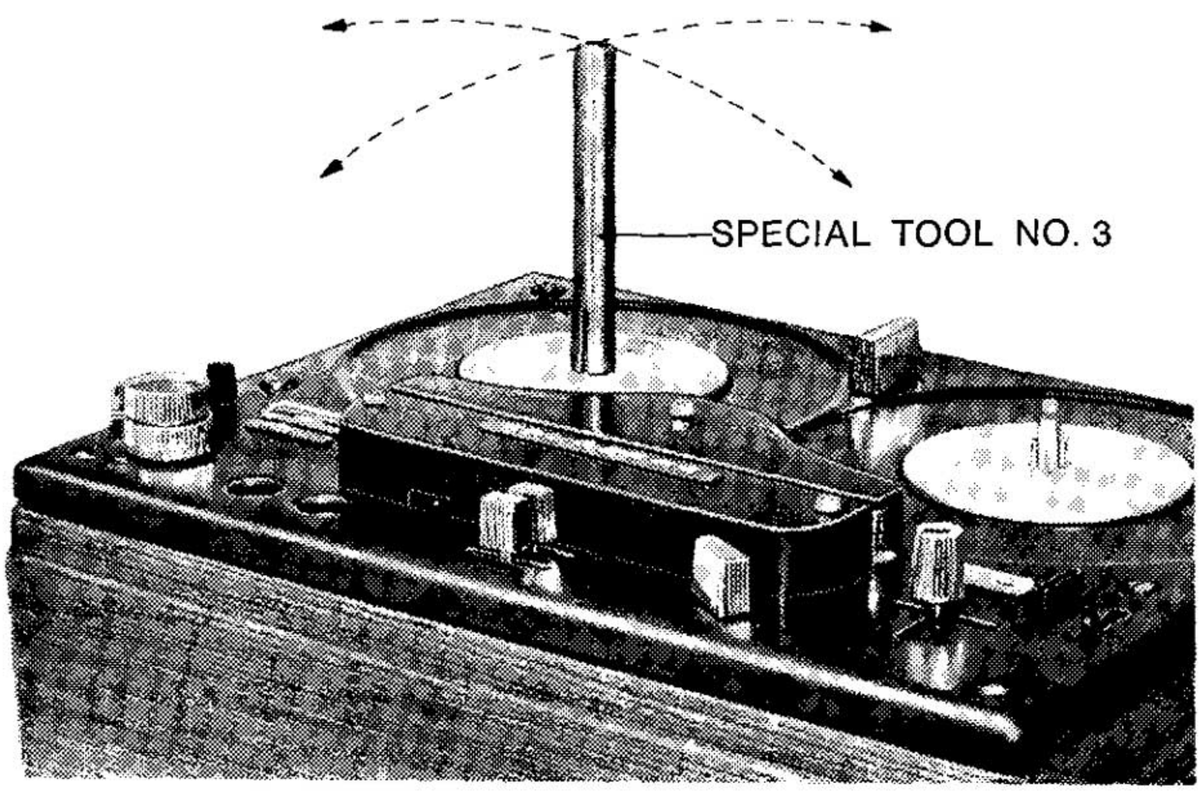

Fig. 19. Alignment of the horizontal position of the turntables with tool No. 3.

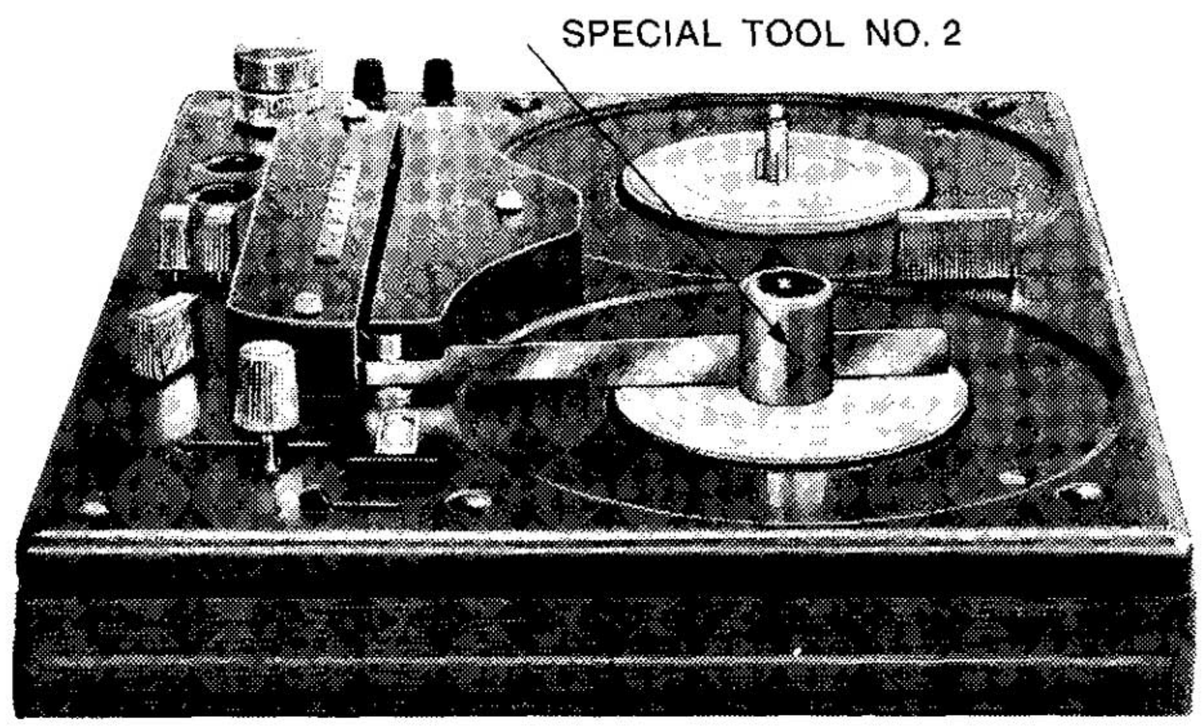

Fig. 20. Control of the horizontal position of the turntables with tool No. 2.

4.3 CLUTCH ALIGNMENTS

4.3.1 General

The motor will always run and drive both pulley discs (61.1, 61.2) when the operating lever (54.1) is set to either normal forward drive, fast wind, or fast rewind position. The two pulley discs will run in the opposite directions caused by the cross threading of the rubber drive belt (62.2). Ref. fig. 6.

The torque of the turntables (65.1, 65.2) is obtained by the friction between the pulley discs (61.1, 61.2) and the feltrings glued to the turntables (65.1, 65.2). The friction between the pulley discs and the turntables is determined by the position of the clutches mounted under each pulley disc. The clutches are operated by the trip bar (52.1), which is connected to the operating lever (54.1).

www.hifiengine.com

4.3.2 Fast rewind

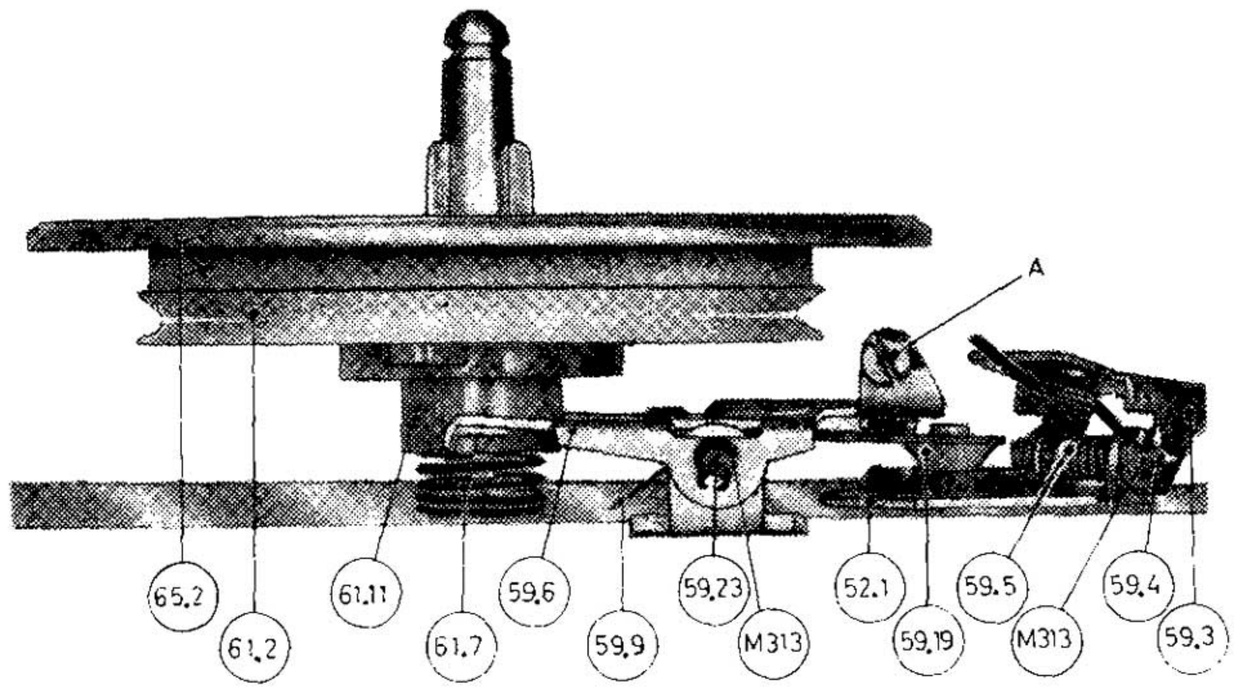

Fig. 21.

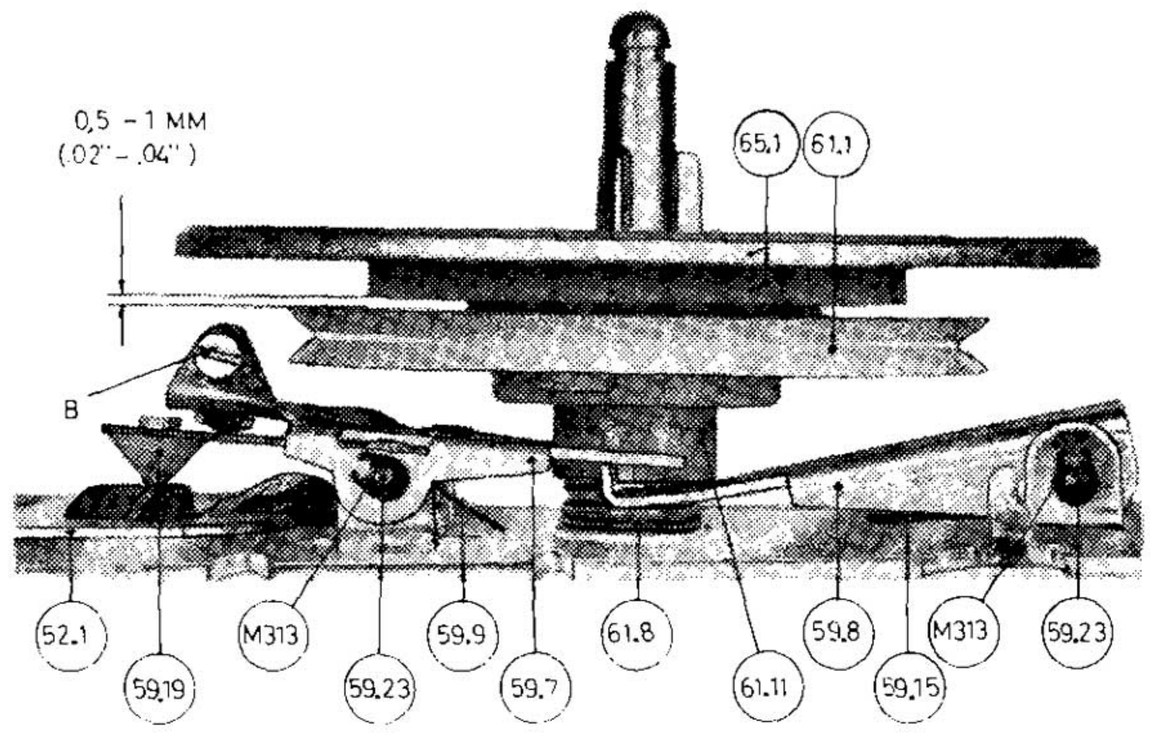

Fig. 22.

The supply turntable
The supply turntable (65.2) has maximum obtainable friction with the pulley disc (61.2) in this position. Ref. fig. 21.
The pulley disc (61.2) is pressed against the turntable (65.2) by the entire tension of the compression spring (61.7).
The trip bar (52.1) has moved, and the delrin button (59.19) on the clutch lever (59.6) is at the lowest position. The two delrin lugs on the cartridge (61.11) and the clutch lever (59.6) are disengaged.

Adjustments
Adjust the height of the clutch lever (59.6) by the screw (A) until the clearance between the clutch lever (59.6) and the delrin lugs on the cartridge (61.11) is approx. 0.5–1 mm (.02"–.04").
The torque of the supply turntable (65.2) should be min. 75 g (2¾ oz) acting on an arm of 8 cm (3½").
Recheck all other positions of the operating lever and finally seal the adjustment screw A.

The take-up turntable
The take-up turntable (65.1) is completely disengaged from the pulley disc (61.1) and free-running in this position. Ref. fig. 22.
The trip bar (52.1) has moved, and the delrin button (59.19) on the upper clutch lever (59.7) is at the highest position, pressing down both the lower clutch lever (59.8) and the two delrin lugs on the cartridge (61.11).

Adjustments
Adjust the height of the upper clutch lever (59.7) by the screw (B) until the clearance between the pulley disc (61.1) and the feltring on the turntable (65.1) is approx. 0.5–1 mm (.02"–.04"). Recheck all other positions of the operating lever and finally seal the adjustment screw B.

4.3.3 Fast wind

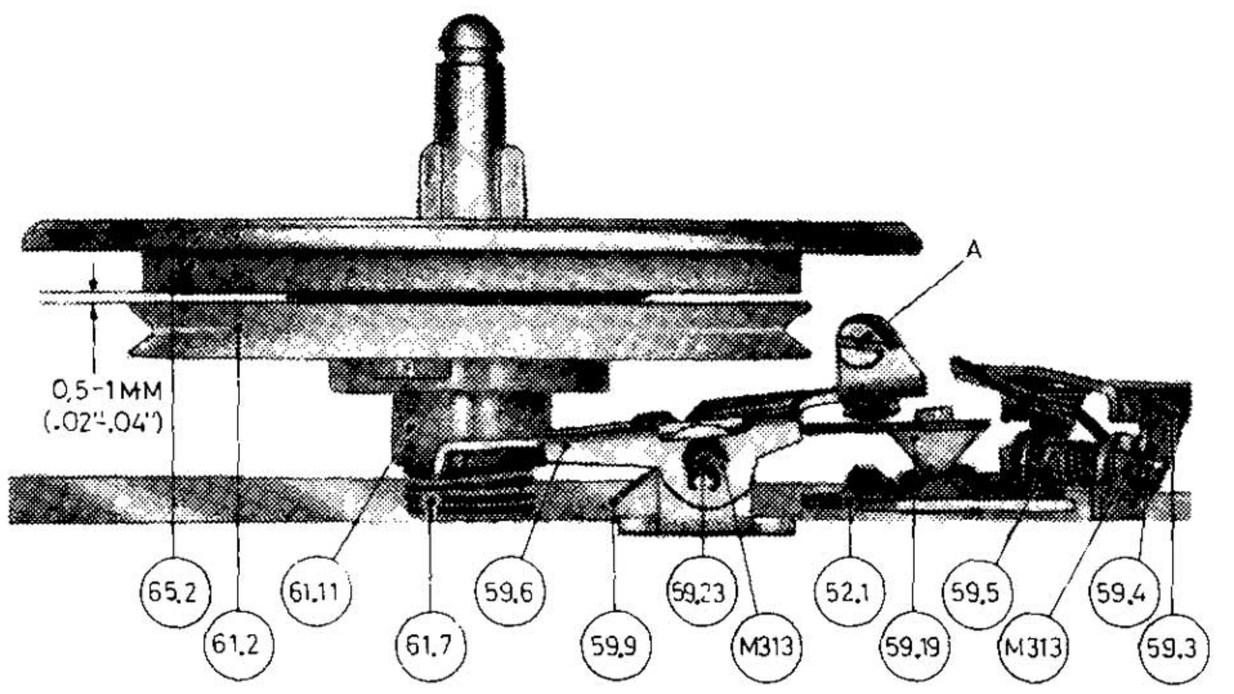

Fig. 23.

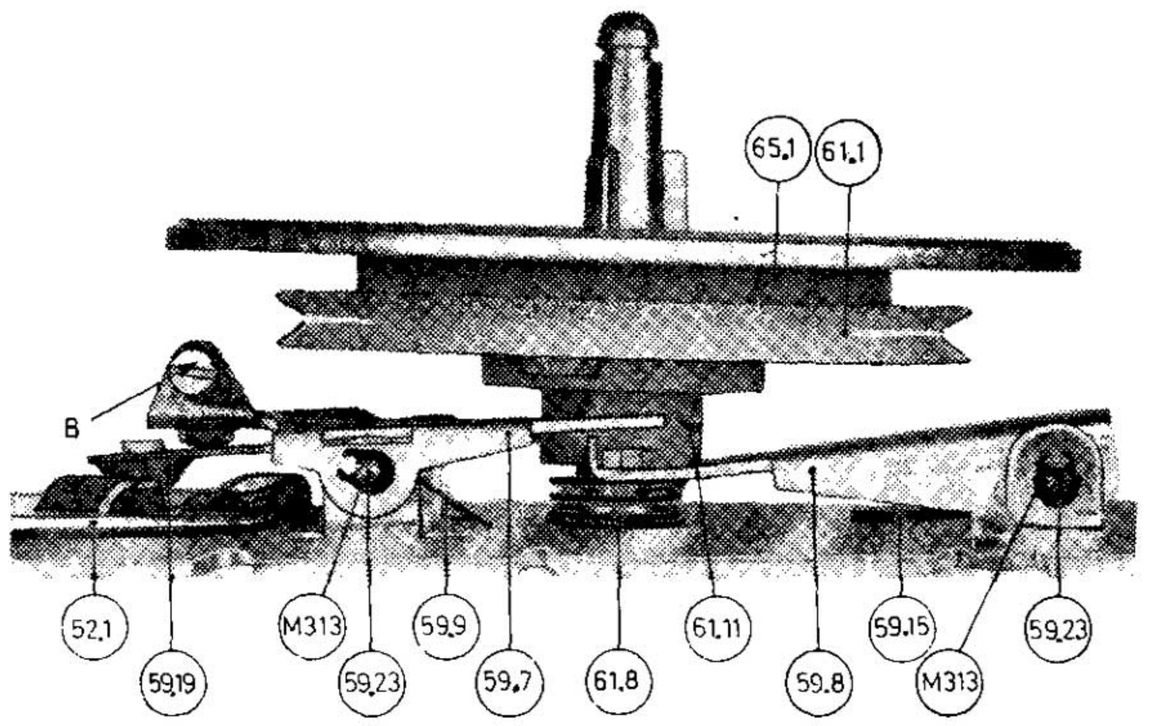

Fig. 24.

The supply turntable
The supply turntable (65.2) is completely disengaged from the pulley disc (61.2) and free-running in this position. Ref. fig. 23.
The trip bar (52.1) has moved, and the delrin button (59.19) on the clutch lever (59.6) is at the highest position, pressing down the two delrin lugs on the cartridge (61.11).

Adjustments
Adjust the height of the clutch lever (59.6) by the screw (A) until the clearance between the pulley disc (61.2) and the feltring on the turntable (65.2) is approx. 0.5–1 mm (.02"–.04"). Recheck all other positions of the operating lever and finally seal the adjustment screw A.

The take-up turntable
The take-up turntable (65.1) has maximum obtainable friction with the pulley disc (61.1) in this position. The springloaded lower clutch lever (59.8) is pressing the delrin lugs on the cartridge (61.11) upwards in addition to the entire tension of the compression spring (61.8). Ref. fig. 24.
The trip bar (52.1) has moved, and the delrin button (59.19) on the upper clutch lever (59.7) is at the lowest position, disengaging the lower clutch lever (59.8) and the two delrin lugs on the cartridge (61.11).

Adjustments
Adjust the height of the upper clutch lever (59.7) by the screw (B) until the clearance between the upper and the lower clutch levers (59.7, 59.8) is approx. 0.5 mm (.02").
The torque of the take-up turntable (65.1) should be min. 65 g (2¼ oz) acting on an arm of 8 cm (3½"). Recheck all other positions of the operating lever and

www.hifiengine.com

4.3.4 Normal forward drive

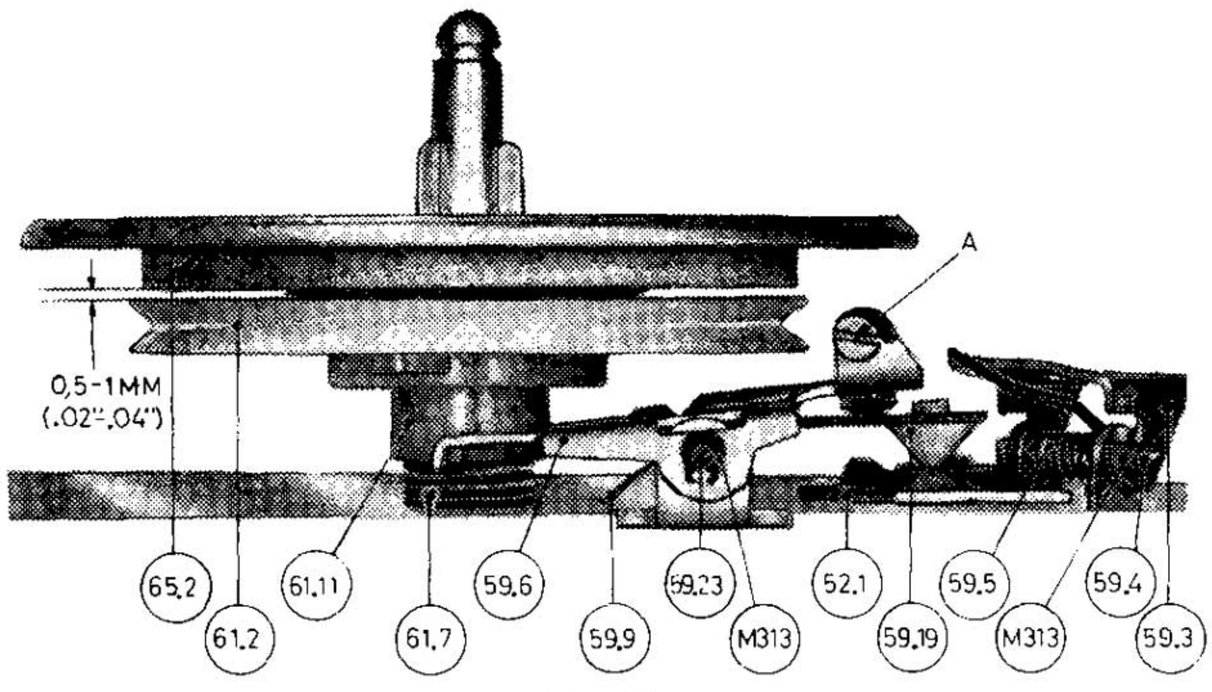

Fig. 25.

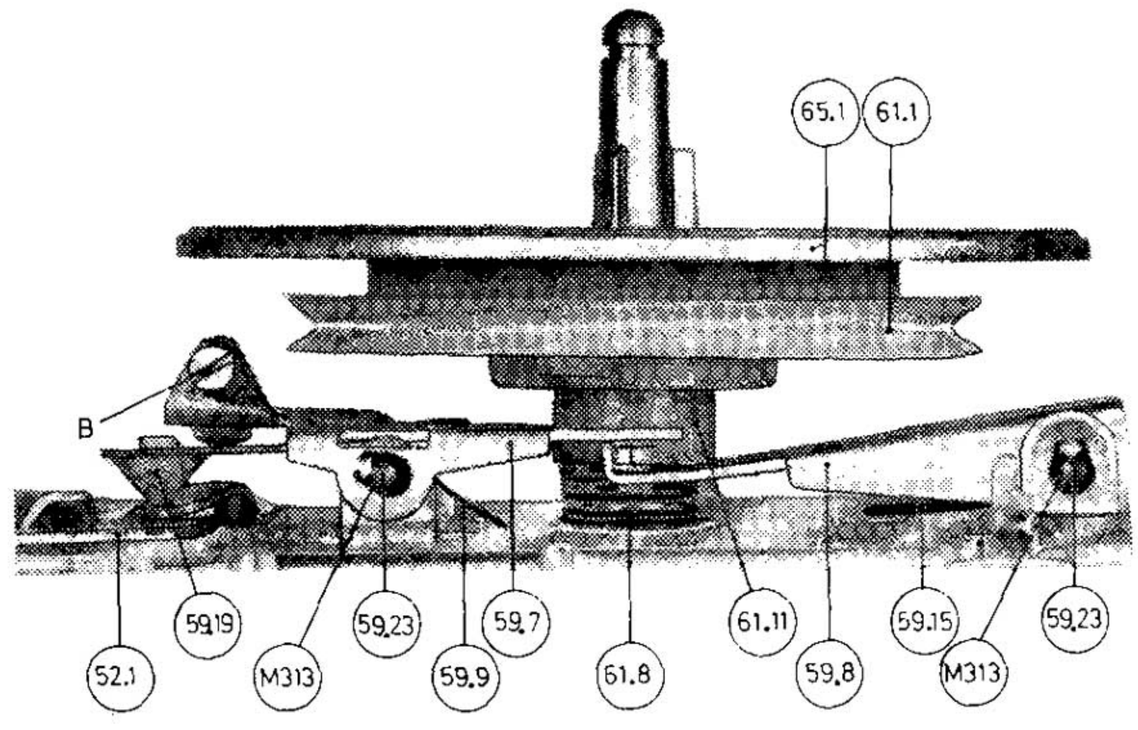

Fig. 26.

The supply turntable
The supply turntable (65.2) is completely disengaged from the pulley disc (61.2) and free-running in this position. Ref. fig. 25.
The trip bar (52.1) has moved, and the delrin button (59.19) on the clutch lever (59.6) is at the highest position, pressing down the two delrin lugs on the cartridge (61.11).

Adjustments
Adjust the height of the clutch lever (59.6) by the screw (A) until the clearance between the pulley disc (61.2) and the feltring on the turntable (65.2) is approx. 0.5–1 mm (.02"–.04"). Recheck all other positions of the operating lever and finally seal the adjustment screw A.

The take-up turntable
The take-up turntable (65.1) has a reduced friction with the pulley disc (61.1) in this position. The torque of the take-up turntable (65.1) should be sufficient to take-up the tape in record or playback modes. Ref. fig. 26.
The trip bar (52.1) has moved, and the delrin button (59.19) on the upper clutch lever (59.7) is in the middle position, pressing down the spring loaded lower clutch lever (59.8). The delrin lugs on the cartridge (61.11) are released from any tension, and the pulley disc (61.1) is pressing against the turntable (65.1) only by the tension of the compression spring (61.8).

Adjustments
Adjust the height of the upper clutch lever (59.7) by the screw (B) until the delrin lugs on the cartridge (61.11) is in the center position between upper and lower clutch levers (59.7, 59.8).
The torque of the take-up turntable (65.1) should be 12–25 g ($^1/_2$–1 oz) acting on an arm of 8 cm (3½").
Recheck all other positions of the operating lever and finally seal the adjustment screw B.

4.3.5 Neutral

The motor power is shut off, and the pulley discs (61.1, 61.2) are not running.

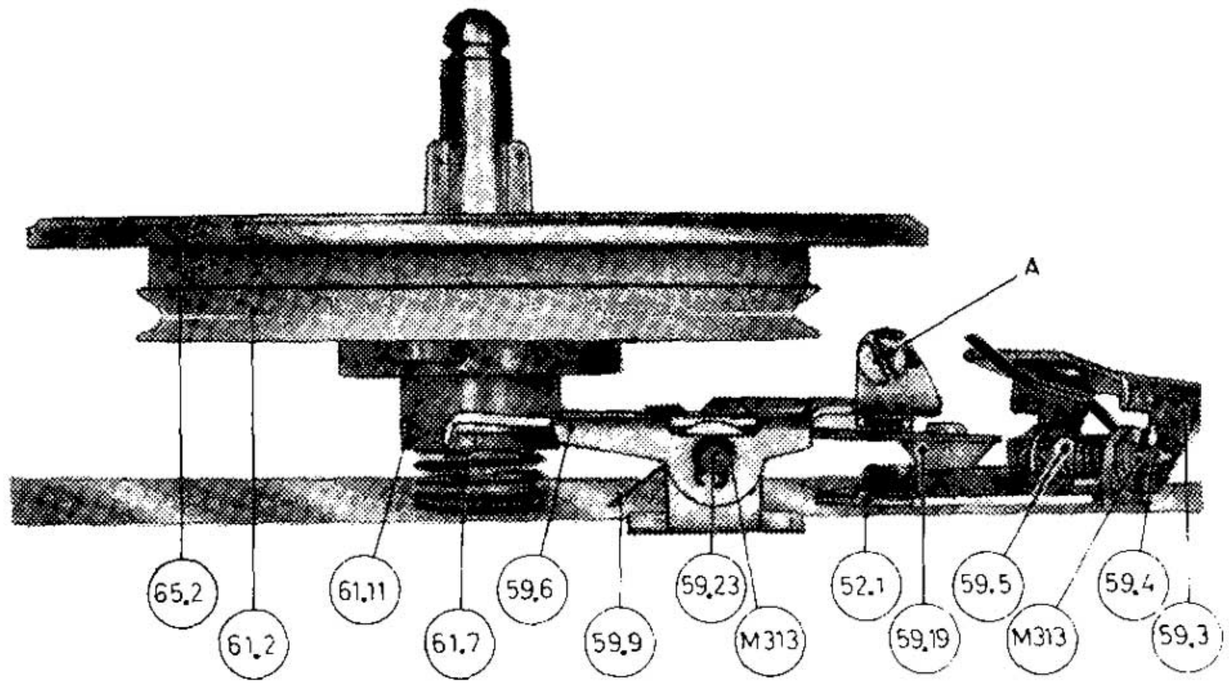

Fig. 27.

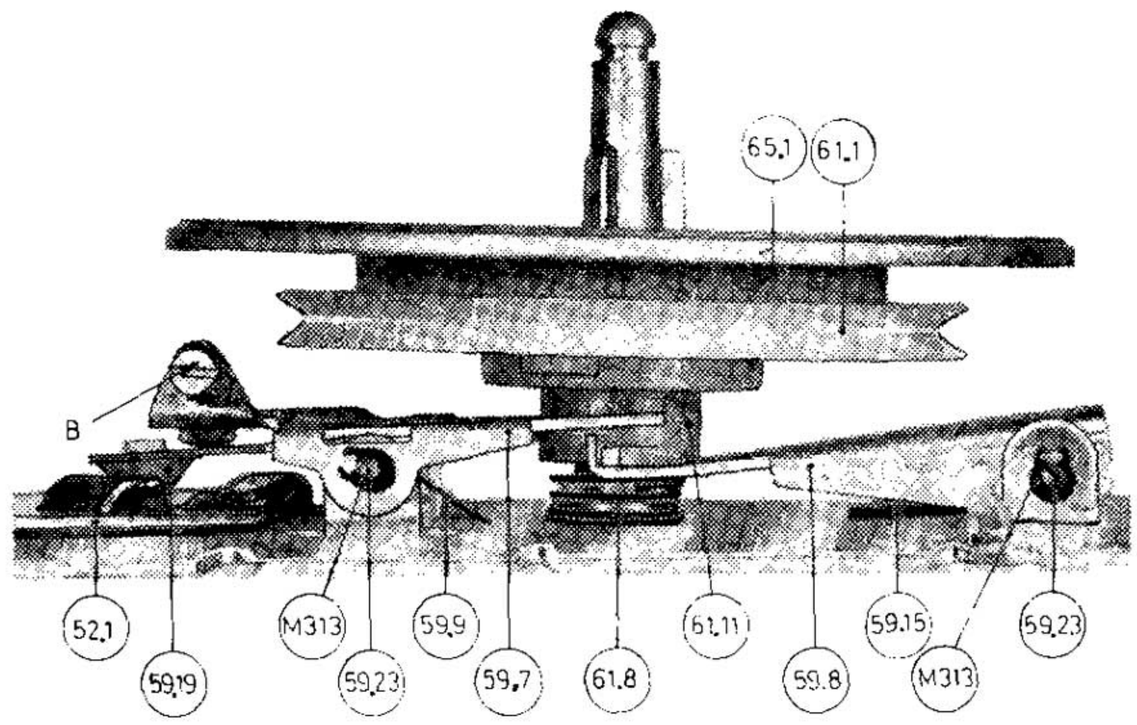

Fig. 28.

The supply turntable
The supply turntable (65.2) has maximum obtainable friction with the pulley disc (61.2) in this position. Ref. chapter 4.3.2, fast rewind.

The take-up turntable
The take-up turntable (65.1) has maximum obtainable friction with the pulley disc (61.1) in this position. Ref. chapter 4.3.3, fast wind.

www.hifiengine.com

4.3.6 Free

The motor power is shut off and the pulley discs (61.1, 61.2) are not running.

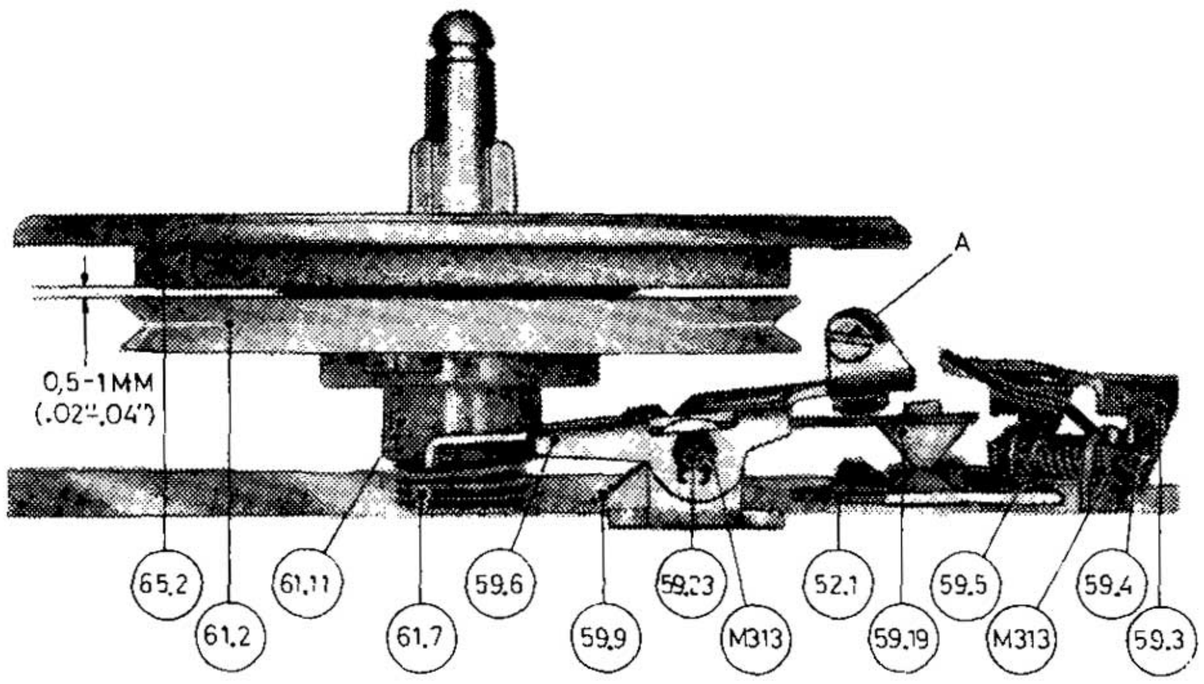

Fig. 29.

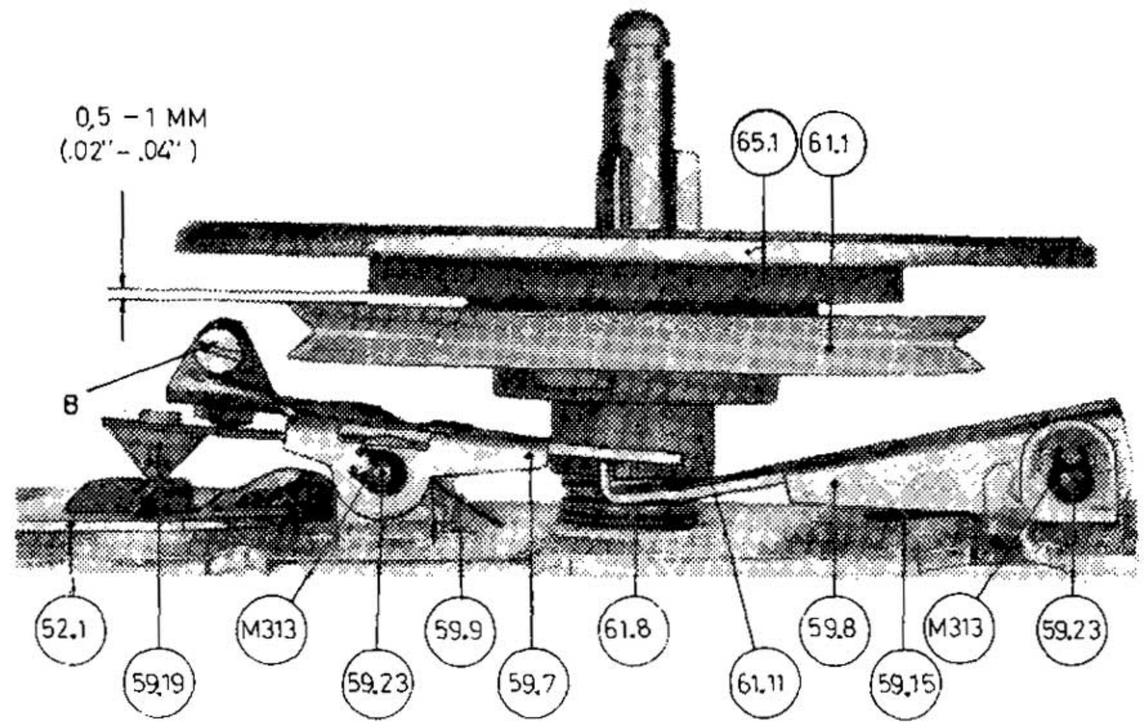

Fig. 30.

The supply turntable

The supply turntable (65.2) is completely disengaged from the pulley disc (61.2) and free-running in this position. Ref. chapter 4.3.3, fast wind.

The take-up turntable

The take-up turntable (65.1) is completely disengaged from the pulley disc (61.1) and free-running in this position. Ref. chapter 4.3.2, fast rewind.

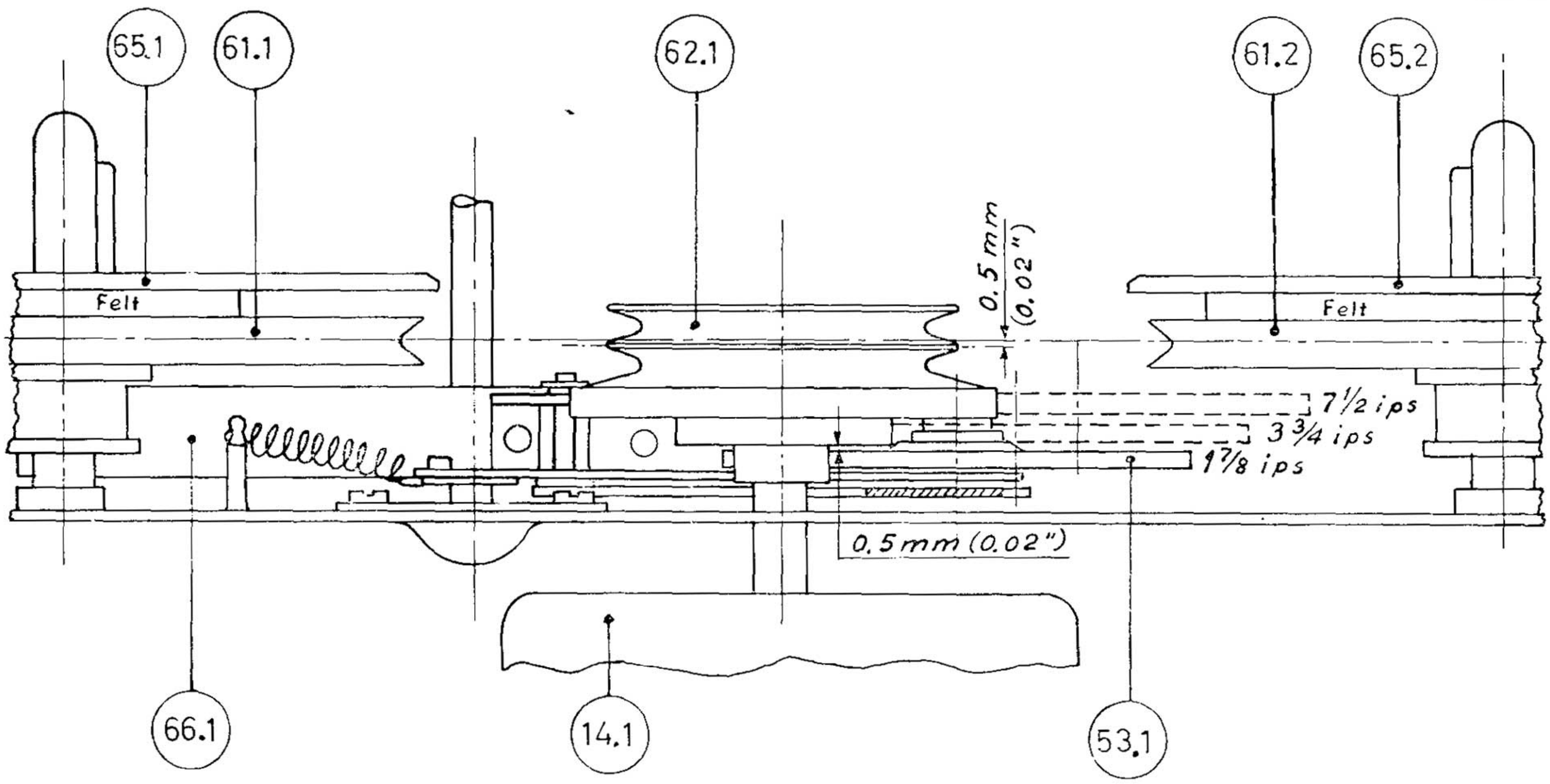

Fig. 31. The alignment of the motor pulley.

4.4 The motor pulley

The driving mechanism with the speed transfer wheel (53.1) engaged in the $1^7/_8$ i.p.s. track on the motor pulley (62.1) is shown in fig. 31. The motor pulley (62.1) has three tracks with different diameters for the speed transfer wheel (53.1), corresponding to the speeds $1^7/_8$, $3^3/_4$, and $7^1/_2$ i.p.s.

Adjustments

The vertical position of the motor pulley (62.1) is adjusted with the operating lever (54.1) in neutral position. The dividing rib of the motor pulley (62.1) should be set 0.5 mm (.02") below an imaginary line drawn between the bottoms of the V-shaped grooves in the pulley discs (61.1, 61.2).

4.4.1 Threading of the rubber drive belt

The rubber drive belt (62.2) is crossthreaded as shown in fig. 6. The belt is running in the upper groove in front of the pulley (62.1), and in the lower groove at the rear of the pulley. The crossing should lie between the supply turntable (65.2) and the motor pulley (62.1).

4.5 THE SPEED TRANSFER WHEEL

The speed transfer wheel (53.1) is attached to the mounting arm (53.3) and is driven by the motor pulley (62.1). The speed transfer wheel (53.1) in turn, drives the fly-wheel (66.1). The spring (53.5) secures the contact of the speed transfer wheel (53.1) between the motor pulley (62.1) and the flywheel (66.1). Ref. fig. 6 and 31.

www.hifiengine.com

Adjustments

The speed selector bracket (79.3) is adjusted until the mounting arm for the speed transfer wheel (53.3) is parallel to the lower mounting plate (71.1) (unscrew the two screws M113). The spacing between the mounting arm (53.3) and the lower mounting plate (71.1) should be approx. 1 mm (.04″). Ref. fig. 34.

The vertical position of the speed transfer wheel (53.1) is adjusted by adding or subtracting turbax washers between the transfer wheel holder (53.2) and the mounting arm for the transfer wheel (53.3). The spacing between the speed transfer wheel (53.1) and the higher speed track on the motor pulley (62.1) should be approx. 0.5 mm (.02″) in the $1^7/_8$ i.p.s. and $3^3/_4$ i.p.s. position.

The vertical position of the speed transfer wheel (53.1) should be minimum 1 mm (.04″) below the upper rim of the flywheel (66.1) in the $7^1/_2$ i.p.s. position. The flywheel (66.1) is lifted, if necessary, by adding an extra thrust washer (66.81) in the lower flywheel bearing. Ref. chapter 4.7.

The horizontal alignment of the speed transfer wheel (53.1) is adjusted by bending the transfer wheel holder (53.2) (tool No. 6) until the speed transfer wheel (53.1) runs parallel to the flywheel (66.1).

4.6 THE LIFTING MECHANISM

The design of the lifting mechanism is shown in fig. 34.

The lifting arm (59.18) with the parallel arm (53.7) and the adjustment arm (53.8) is located between the upper and the lower mounting plates (71.2, 71.1). The lifting arm (59.18) is linked to the eccentric segment (59.17) while the parallel arm (53.7) is connected between the lifting arm (59.18) and the transfer wheel holder (53.2).

The lifting mechanism releases the speed transfer wheel (53.1) from contact with the motor pulley (62.1) and the flywheel (66.1) in all positions of the operating lever (54.1) except normal forward drive.

Adjustments:

Ref. fig. 34.

Loosen screw A. The lifting between the speed transfer wheel (53.1) and the motor pulley (62.1) is individually adjusted for the three speeds by bending the splits X, Y and Z on the lifting arm (59.18), corresponding to the speeds $7^1/_2$, $3^3/_4$ and $1^7/_8$ i.p.s. The lifting is occasioned by a relatively small movement of the operating lever (54.1) from normal forward drive to neutral. The lifting should be completed before the motor current is shut off by the microswitch (33.3).

The clearance between the motor pulley (62.1) and the speed transfer wheel (53.1) at all speeds should be minimum 3 mm when the operating lever (54.1) is in neutral position.

Set the speed selector to $1^7/_8$ i.p.s. tape speed and the operating lever to neutral position. Turn the adjustment arm (53.8) until a spacing of 0,5 mm (.02″) is obtained between the speed transfer wheel (53.1) and the flywheel (66.1). Turn the speed selector to $3^3/_4$ and $7^1/_2$ i.p.s. tape speed and check that the spacing is min. 0,5 mm (.02″) for both positions. Readjust if necessary and re-seal the adjustment screw A.

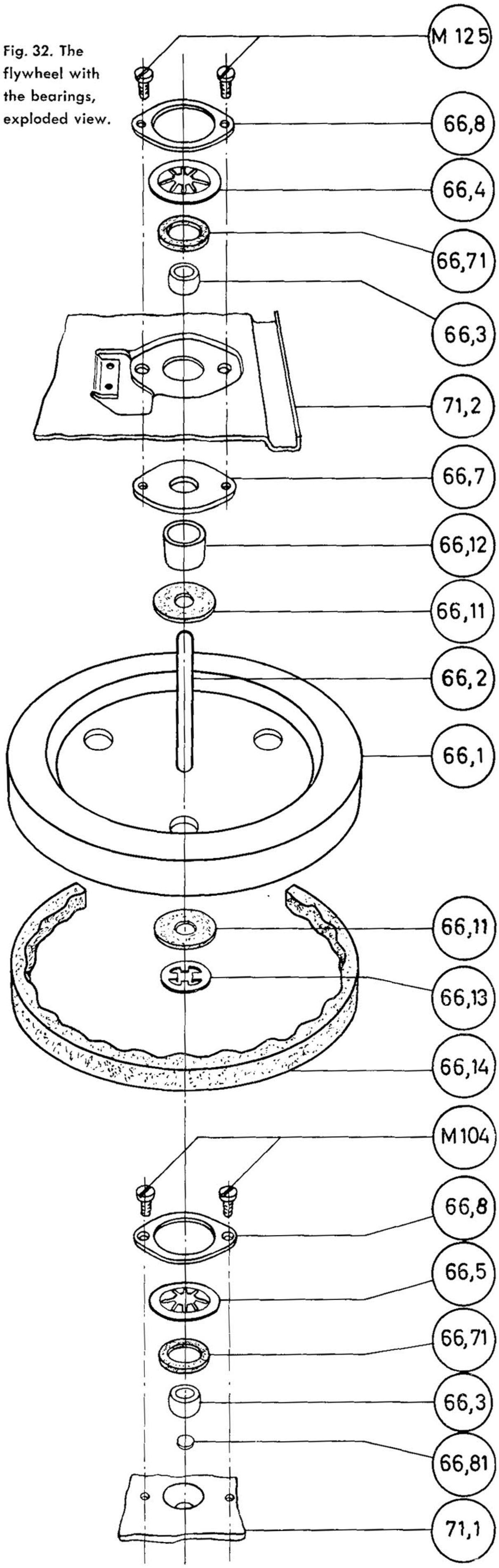

Fig. 32. The flywheel with the bearings, exploded view.

www.hifiengine.com

4.7 THE FLYWHEEL WITH THE CAPSTAN

The flywheel shaft acts as the capstan (66.2), and is mounted in two selflubricating and selfadjusting bearings (66.3). Ref. fig. 32.

Adjustments

The vertical position of the capstan (66.2) is aligned with the special tool No. 5 inserted on top of the capstan as shown in fig. 33.

The two screws (M125) are loosened, and correct position of the capstan (66.2) is obtained when all three legs of the tool No. 5 touches the upper mounting plate (71.2).

4.7.1 The brake for the flywheel

The brake spring (66.6) for the flywheel (66.1) is attached to the lifting arm for the speed transfer wheel (59.18). Ref. fig. 6.

The brake is engaged in all positions of the operating lever (54.1) except normal forward drive.

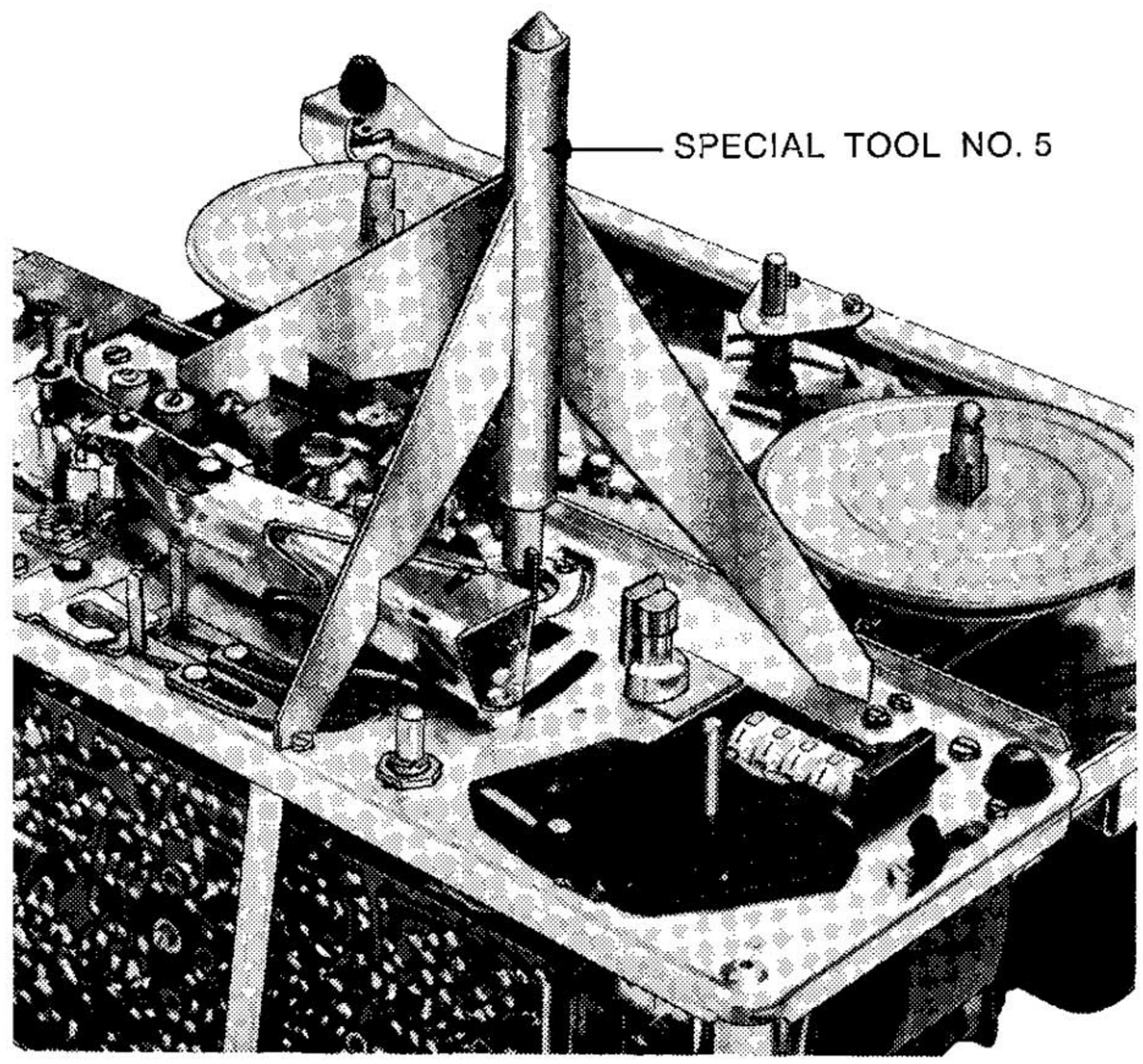

Fig. 33. Alignment of the capstan with tool No. 5.

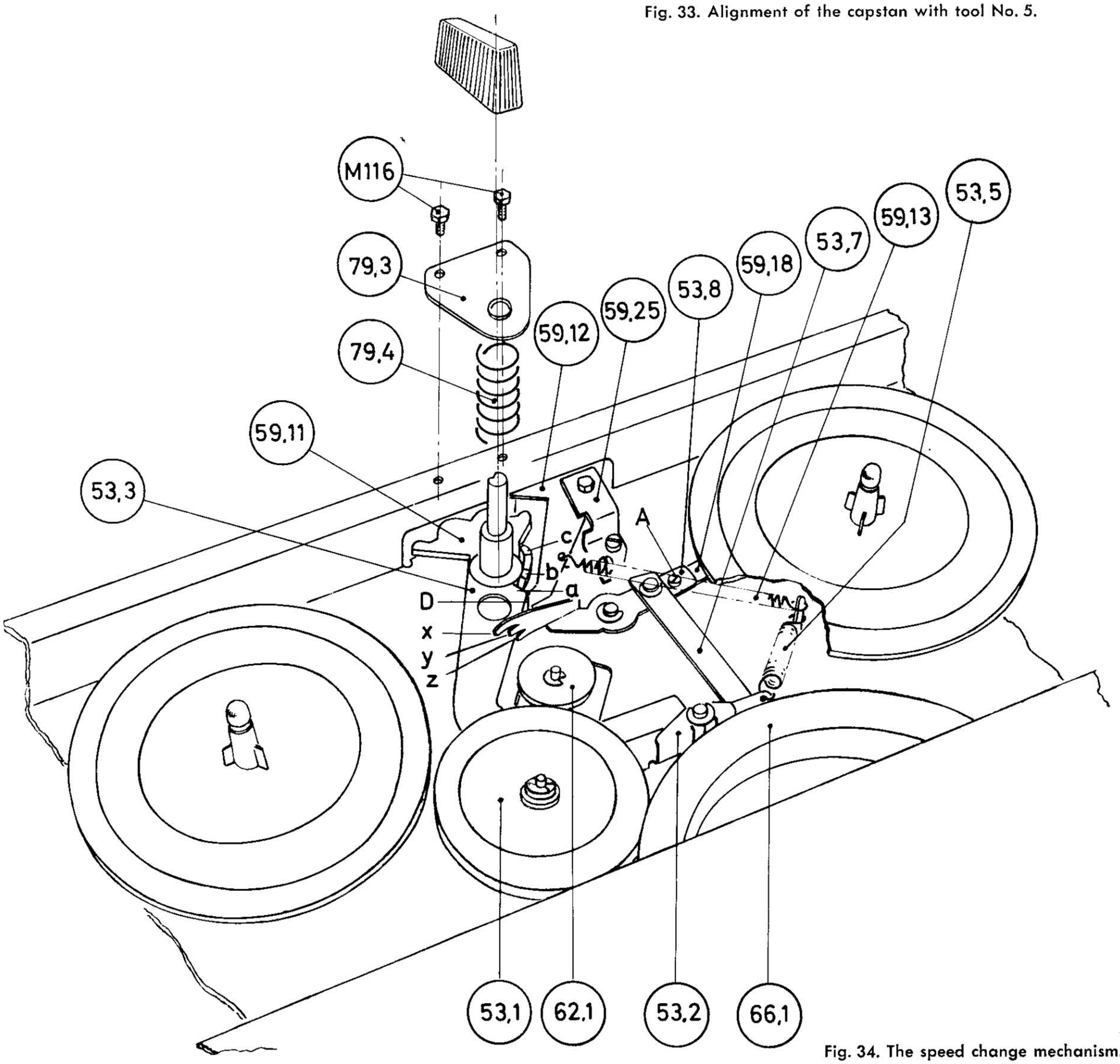

Fig. 34. The speed change mechanism.

www.hifiengine.com

4.8 THE SPEED CHANGE MECHANISM

The speed change mechanism is designed as shown in fig. 34.

The speed transfer wheel (53.1) is engaged with the lowest track on the motor pulley (62.1), and the mounting arm for the speed transfer wheel (53.3) is pressed against the lowest level (level a) on the cam disc (59.11) in the $1^7/_8$ i.p.s. position.

The speed transfer wheel (53.1) will be disengaged from the motor pulley (62.1), and moved out horizontally approx. 1″, when the speed selector knob (53.4) is turned towards the 3¾ i.p.s. position. This horizontal movement is accomplished by the cam disc arm (59.12), which roller rests against the curvature of the cam disc (59.11). The cam disc arm (59.12) presses against the mounting arm for the speed transfer wheel (53.3) in point D.

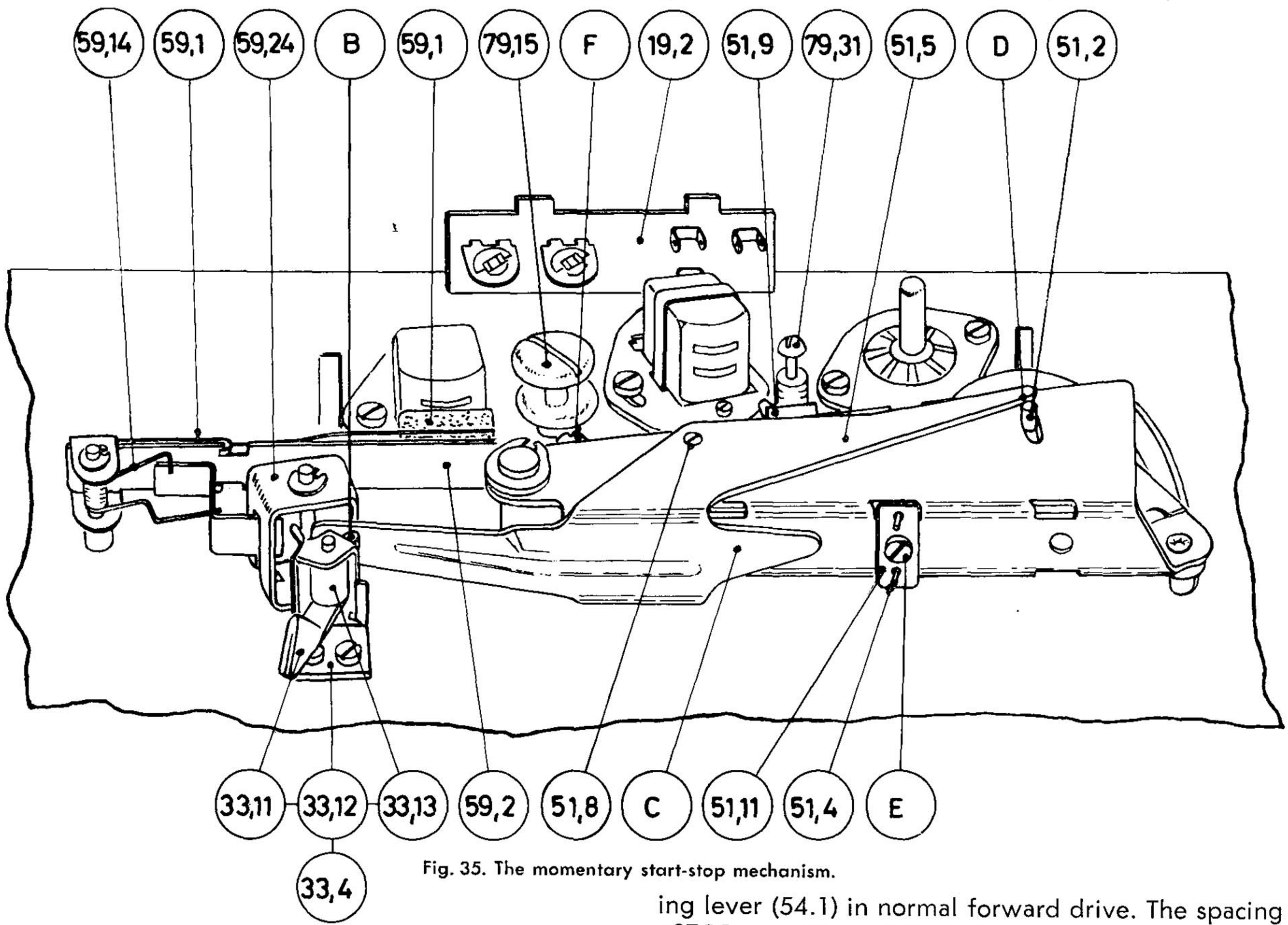

Fig. 35. The momentary start-stop mechanism.

The vertical lifting of the mounting arm for the speed transfer wheel (53.3) is accomplished by the slope of the cam disc (59.11) between the levels a and b. The slope presses the mounting arm for the speed transfer wheel (53.3) upwards from the level a ($1^7/_8$ i.p.s. position) to the level b ($3^3/_4$ i.p.s. position) during the rotation of the speed selector knob (53.4).

Adjustments

The spacing at point D between the cam disc arm (59.12) and the mounting arm for the speed transfer wheel (53.3) should be 0.5 mm (.02″) with the operating lever (54.1) in normal forward drive. The spacing «STOP» position. Adjust the pressure wheel lever (51.5) by bending the flat part B to obtain a spacing of approx. 0.5 mm (.02″) between the pressure wheel (51.1) and the capstan (66.2). Ascertain a play of approx. 0.2 mm (.012″) between the pressure wheel lever (51.5) and the transfer bracket (59.24).

Start the mechanism by moving the start-stop lever to the left position. Adjust the pressure wheel lever (51.5) by bending the tongue C to obtain a spacing of approx. 1 mm (.04″) between the pressure wheel shaft (51.2) and the pressure wheel lever (51.5) at point D. Make sure that the space between the pressure wheel lever (51.5) and the start-stop lever (33.11) is approx. 0.5 mm (.02″).

is adjusted by bending the nose of the cam disc arm (59.12). Remove the motor pulley (62.1) to make this alignment.

4.9 THE MOMENTARY START-STOP FEATURE

The momentary start-stop mechanism (33.4) is designed as shown in fig. 35.

The delrin bushing (33.9) will press against the pressure wheel lever (51.5) in point B when the start-stop lever (33.11) is moved to stop position. The pressure wheel lever (51.5) moves the pressure wheel shaft (51.2) with the pressure wheel (51.1) away from the capstan (66.2) and activates the tape brake (51.9).

Adjustments

Move the operating lever to normal forward drive position and set the momentary start-stop lever in

www.hifiengine.com

4.10 THE PRESSURE PAD

The pressure pad (59.27) is located in front of the erase head and is introduced to secure maximum erasure, and to ensure constant friction for the tape, when the recorder is operating in normal forward drive. Ref. fig. 11 and 35. The pressure pad arm (59.2) is activated by the pressure wheel lever (51.5) and the transfer bracket (59.24). The pressure pad (59.27) is pressing against the tape and the erase head in normal forward drive, and is completely disengaged in all other positions of the operating lever (54.1).

Adjustments

The pressure pad (59.27) should be cleaned occasionally, as the accumulation of dust and iron oxide particles might seriously affect the erasure and the tape movement.

Note: Do not soak the felt pad with any liquid.
The spring with felt for the pressure pad (59.1) is designed as a snap-on type, and can easily be pulled out by bending the two tags on the hard brass spring away from the slots in the pressure pad arm (59.2).
The tension of the pressure pad (59.27) against the erase head, in normal forward drive position, should be 75—100 g ($2^5/_8$—3½ oz). This tension is corrected by adjusting the tension of the spring (59.14) for the pressure pad.

4.11 THE AUTOMATIC END STOP SWITCH

The actuating spring (79.17) for the end stop switch is located in the slot of the right tape guide (79.14). The microswitch (33.2) is mounted under the upper mounting plate (71.2) ref. fig. 9 and 11.
The microswitch (33.2) shuts off the motor when the tape runs out or if the tape breaks. The switch works independent upon the position of the operating lever (54.1).

Adjustments

The operating point of the microswitch (33.2) is adjusted by bending the actuating spring (79.17) in point A. Ref. fig. 36. The operating point is set 0.5 mm (.02″) in front of the imaginary line x—x, when the actuating spring (79.17) is moved from the rest position towards the front of the upper mounting plate (71.2).

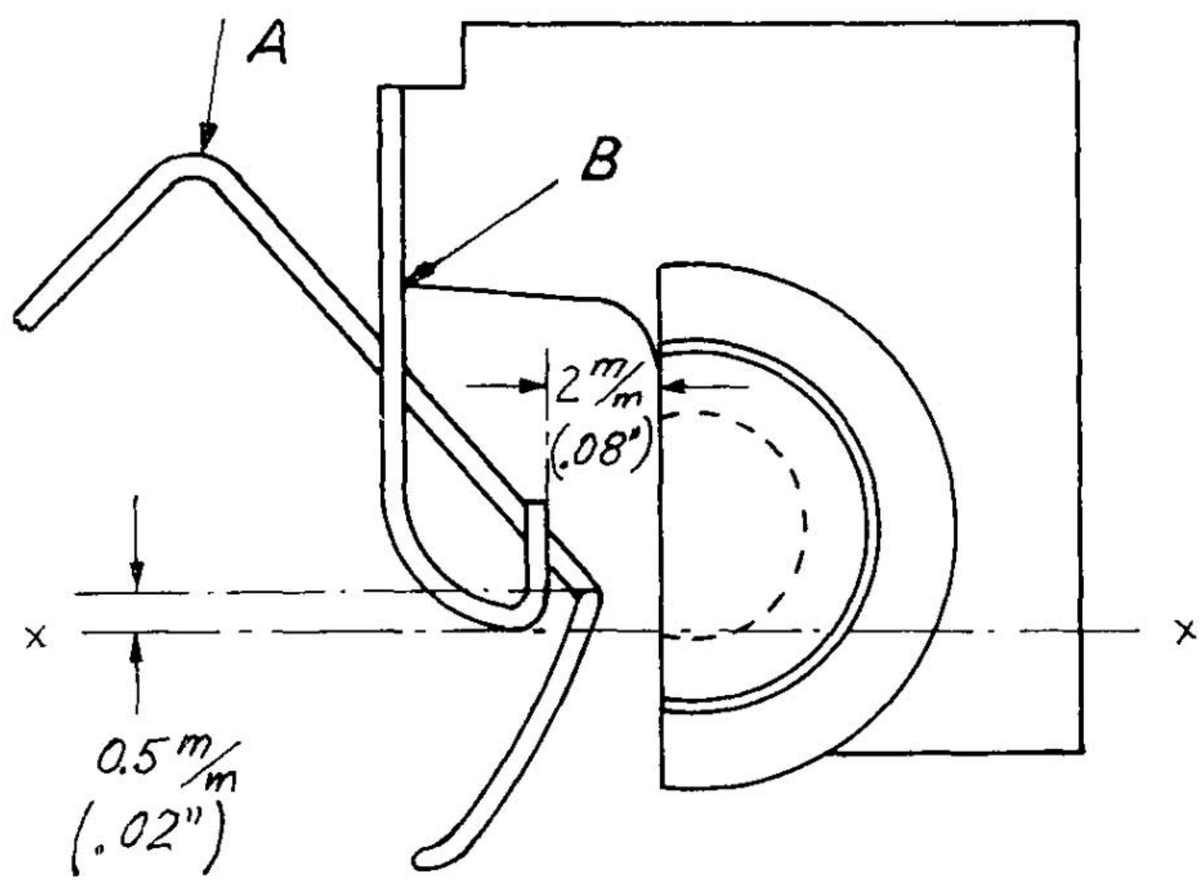

Fig. 36. Horizontal adjustment of the end stop switch.

The actuating spring shall run free inside the tape guide slot without sticking. The width of the slot is adjusted to 2 mm (.08″) by bending the bracket in point B. Ref. fig. 36.
The vertical position of the actuating spring (79.17) is adjusted as shown in fig. 37. The vertical part of the spring should cover approx. 3 mm ($^1/_8$″) of the tape. Misalignments could cause the tape to be squeezed out of the tape guide.
Ascertain sufficient clearance between the upper part of the actuating spring marked D and the front trim cover (73.1) when tape is inserted.

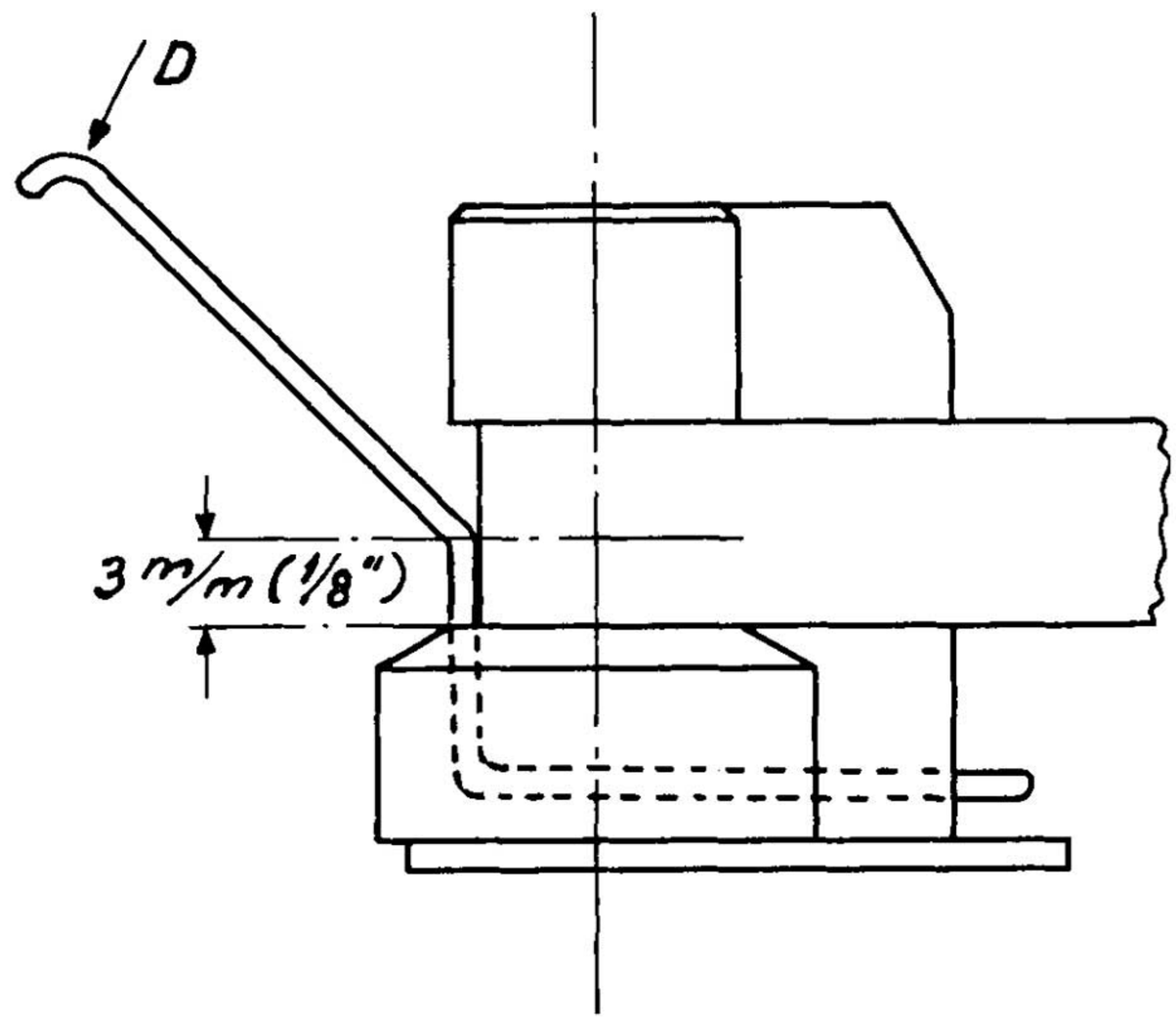

Fig. 37. Vertical adjustment of the end stop switch.

4.12 THE REVOLUTION COUNTER

The revolution counter (79.23) is located between the upper and the lower mounting plates (71.2, 71.1), behind the operating lever (54.1). The counter (79.23) is driven by a rubber belt (69.3) and a pulley disc (69.1) attached to the shaft of the take-up turntable (65.1). Ref. fig. 9 and 53.

Adjustments

The pulley disc for the revolution counter (69.2) is mounted flush with the counter shaft. The pulley disc (69.1) is mounted tight up against the lock spring (79.8) for the take-up turntable. Misalignment of the vertical position of the pullies might cause the rubber belt (69.3) to fall off.

4.13 ASSEMBLING THE TOP COVER

The top cover is attached to the recorder as shown in fig. 38.

Vertical alignment of the top cover

Two thick rubber washers (74.5) have been introduced between the top cover and the mounting brackets. By tightening the two screws (M130) slightly, the rubber will be compressed and allow the necessary vertical adjustment of the top cover. Ref. fig. 38.
The vertical position of the top cover should be adjusted to ascertain sufficient spacing between the plastic tape reels and the top cover in all modes of operation.

www.hifiengine.com

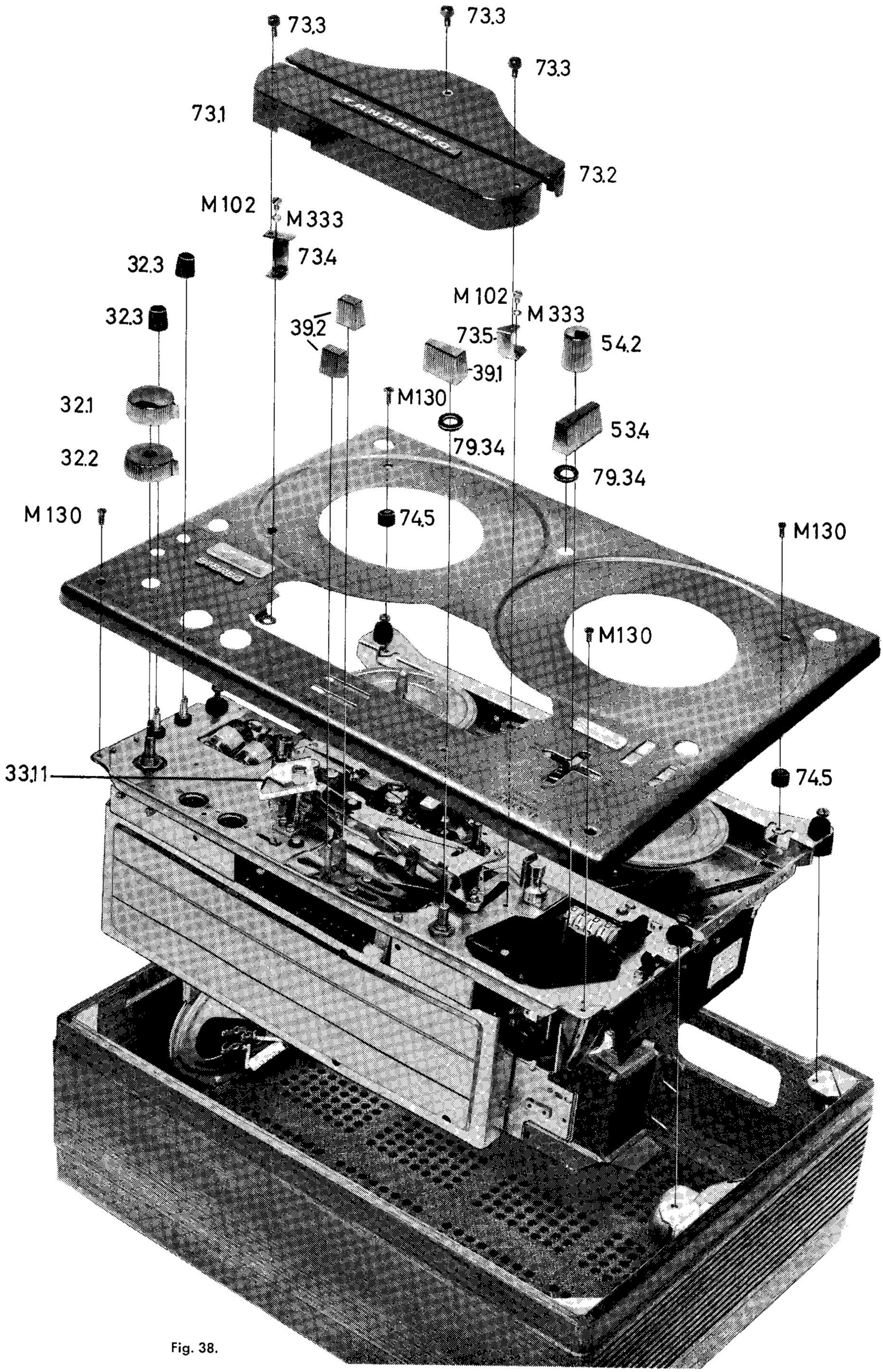

Fig. 38.

www.hifiengine.com

5.0 The electronic circuits, detailed description and adjustment instructions

5.1 THE MAIN ELECTRONIC UNITS, BLOCK DIAGRAM

The block diagram of the Tandberg tape recorder series 12 is shown in fig. 39.
The tape recorder is equipped with the following units:

2 Record pre-amplifiers
2 Playback pre-amplifiers
2 Equalizing amplifiers
2 Power output amplifiers
2 Record level indicator circuits
1 Oscillator
The power supply
The switching system

The equalizing amplifiers have the following three functions:

Record equalizing
Playback equalizing
Amplifier equalizing

The different units can be interconnected in various combinations by the switching system, creating a very flexible tape recorder.
The amplifiers are identical for the two channels, and only the amplifiers for the upper track are therefore explained in the following discussions.

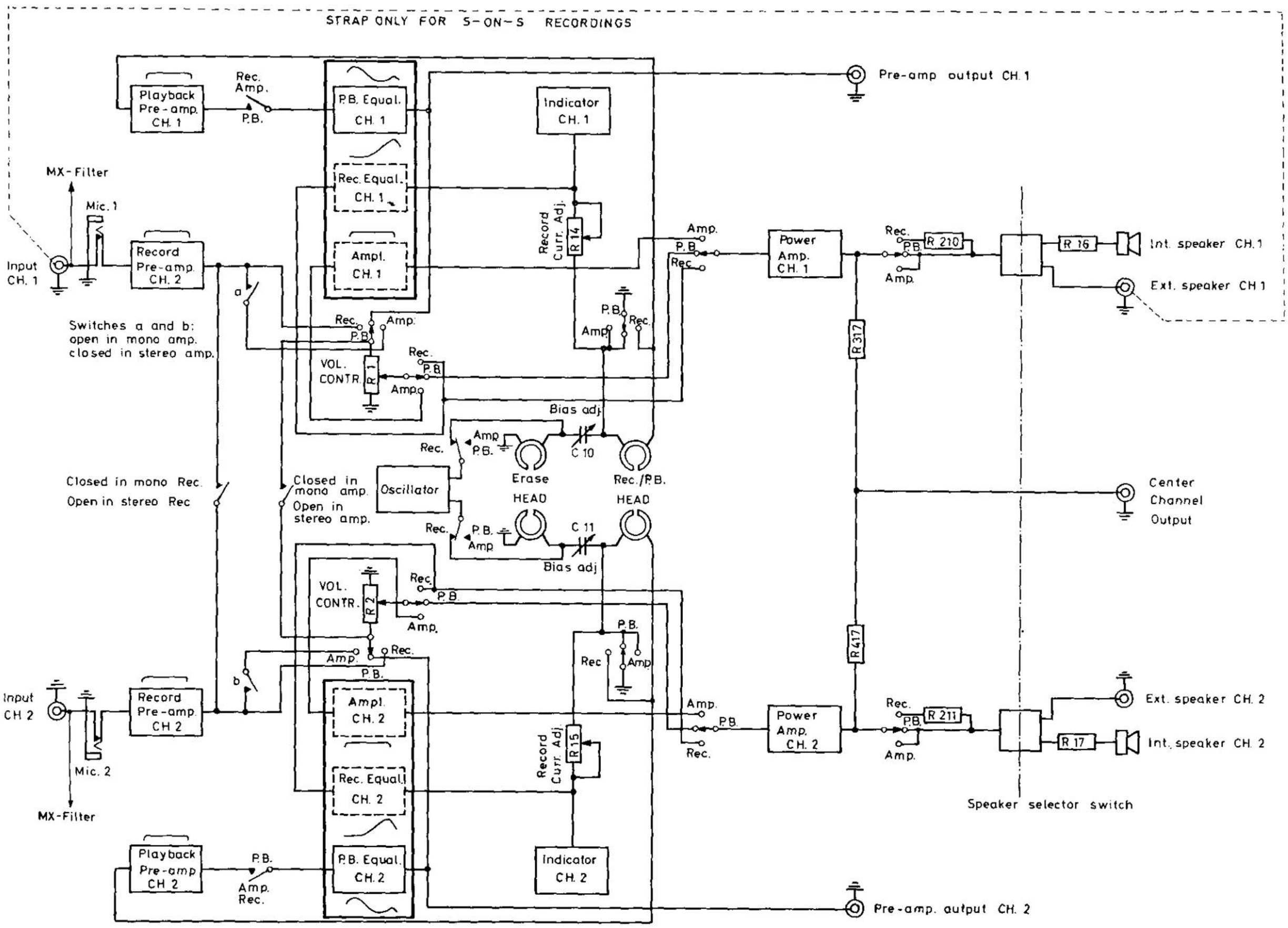

Fig. 39. Block diagram models 12—4 and 12—2. The diagram shows the switches in stereo recording.

5.1.1 Inputs

The schematic of the input circuits is shown in fig. 40. The circuit indicated by the dotted lines is the connection used on tape recorders sold in certain areas. These recorders are equipped with standard telephone jacks instead of the DIN contacts for the microphone inputs. When the microphones are plugged in, the corresponding HIGH LEVEL, LOW LEVEL, RADIO and CR PHONO inputs are automatically disconnected.

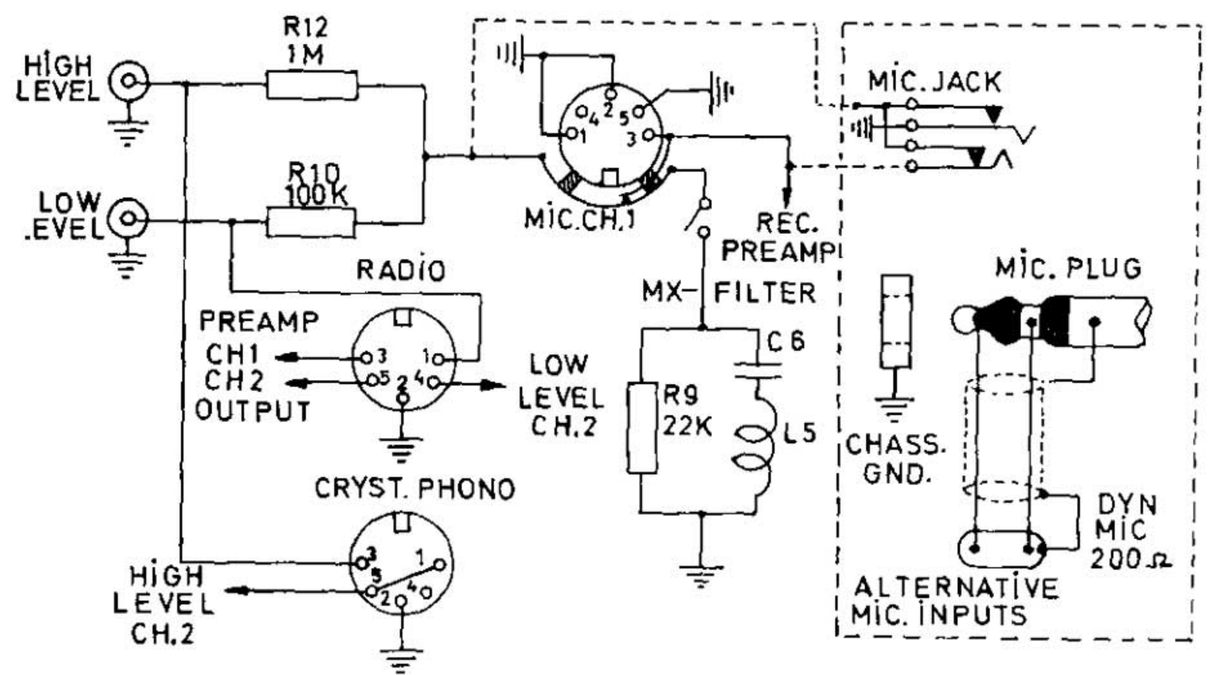

Fig. 40. The input circuits.

www.hifiengine.com

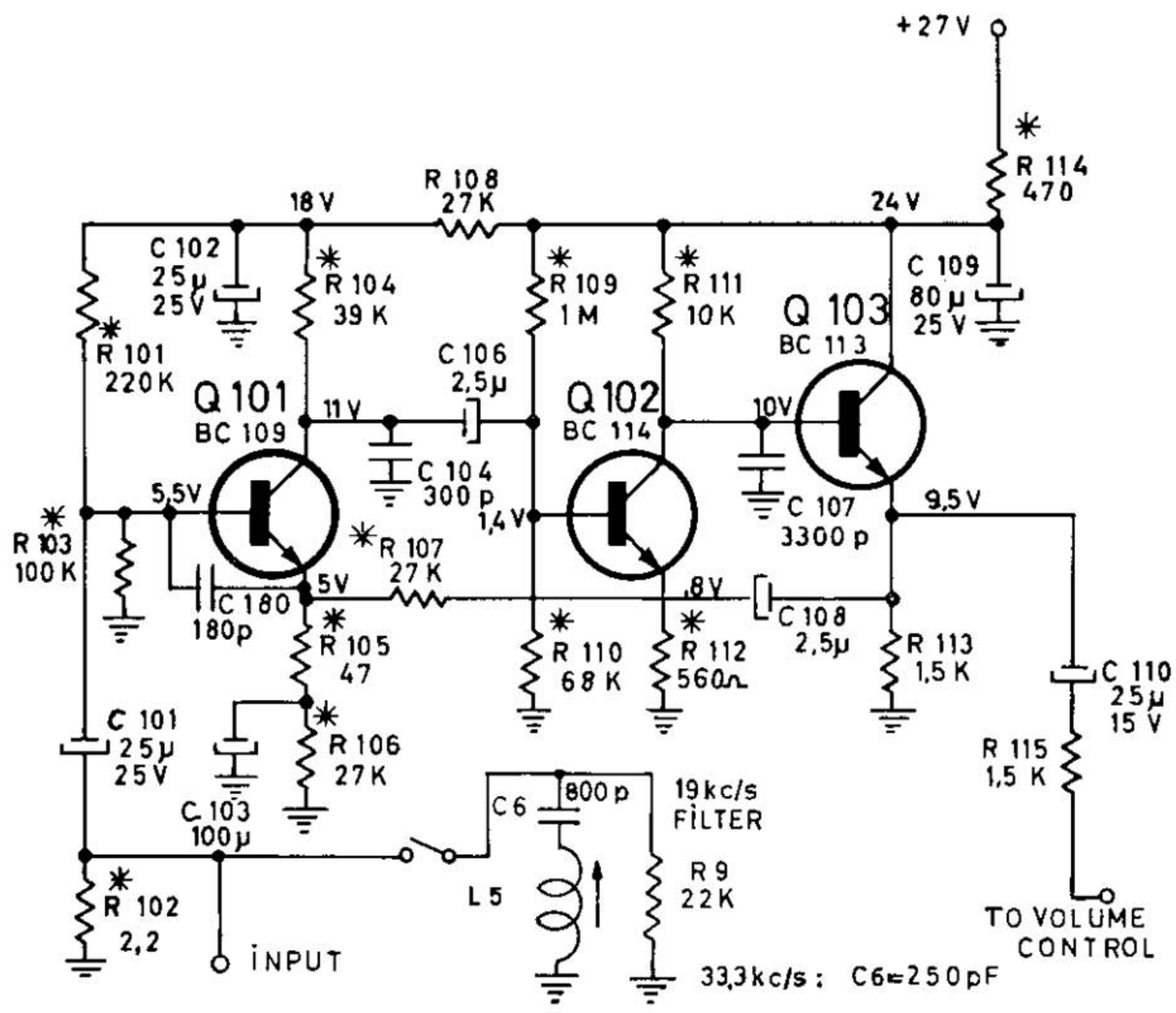

Fig. 41. The record pre-amplifier, schematic.

5.1.2 The record pre-amplifier

The schematic for the record pre-amplifier is shown in fig. 41. The record pre-amplifier is a three stage transistor amplifier. Q101 and Q102 are connected in common emitter connection while Q103 is connected in common collector connection (emitter follower).

The record pre-amplifier is furnished with one microphone input and one line input connected in parallel. When using the microphone input, the line input is disconnected. The input impedance is 200 ohms, unbalanced. The input sensitivity is .15 mV. The capacitors C104, C107 and C180 are filtercapacitors for radio frequency signals.

The components R105, R107 and R113 form a negative feedback circuit from the emitter of Q103 to the emitter of Q101.

The feedback circuit is frequency independent and introduced for stabilizing the amplifier.

A negative frequency independent feedback circuit (R105, R106 and C103) is introduced in the emitter circuit of Q101.

The output signal from the record preamplifier passes C110 and R115 via the contact FI1 to the Volume control R1. The frequency response of the record pre-amplifier is flat.

5.1.3 The FM-multiplex filter

Ref. fig. 41. The FM-multiplex filter, C6, L5 and R9, is introduced to remove the pilot signal which might appear on the output terminals of the tuner during stereo reception.

The pilot signal is usually a 19 kc/s signal but in certain areas a 33,3 kc/s signal is used which will need a slight modification of the filter, ref. fig. 41.

5.1.4 The equalizing amplifier in RECORD position

The schematic for the equalizing amplifier in record position, is shown in fig. 42. The record amplifier is a four transistor amplifier.

Q106 and Q107 is a compound connected stage (Darlington connection). This circuit has a high input impedance and high amplification. Q108 is connected in common emitter connection and Q109 is connected in common collector connection (emitter follower).

The record equalization is obtained by the negative feedback circuit from the emitter of Q109 to the emitter of Q107.

The emitter feedback circuit decreases the amplification approximately 30 dB in the medium range of the frequency response.

The lower range of the high frequency response is determined by the capacitor C122. The serial resonance circuit L1, C125 and R136 forms the high frequency response.

The low frequency response is obtained by the capacitor C127 and the resistor R140.

C186 is introduced to form a part of the high frequency response.

The equalization switch is linked to the speed selector knob, and correct equalization for the different speeds will be obtained automatically when the speed is changed.

The components are referred to 7½ i.p.s. tape speed. The speed equalization is obtained in 3¾ i.p.s. by the resistor R134 and the capacitor C124, in speed $1^7/_8$ i.p.s. the equalization is obtained by the resistor R132 and the capacitor C123.

The output signal is fed to the record current adjustment potentiometer R14 via the resistor R145.

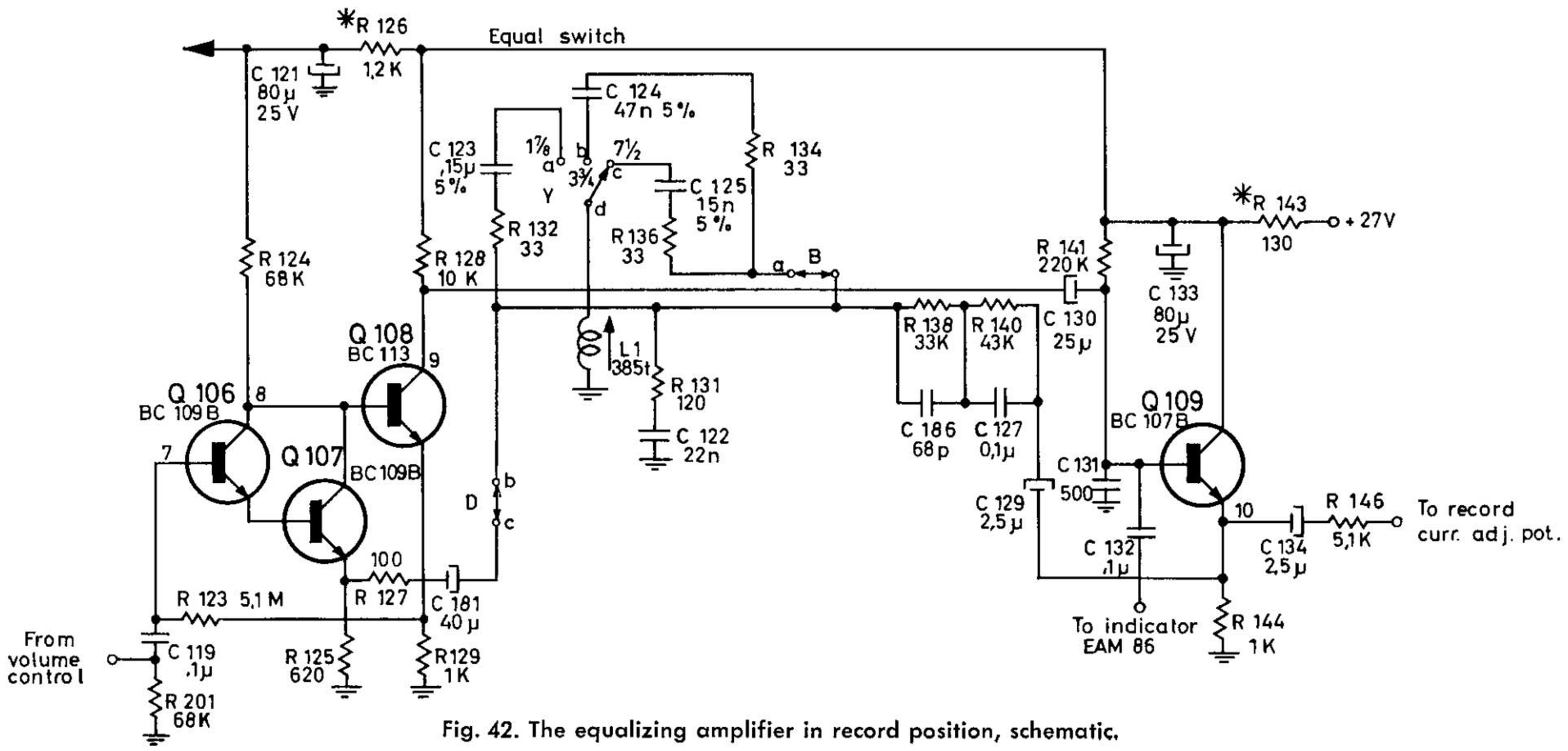

Fig. 42. The equalizing amplifier in record position, schematic.

www.hifiengine.com

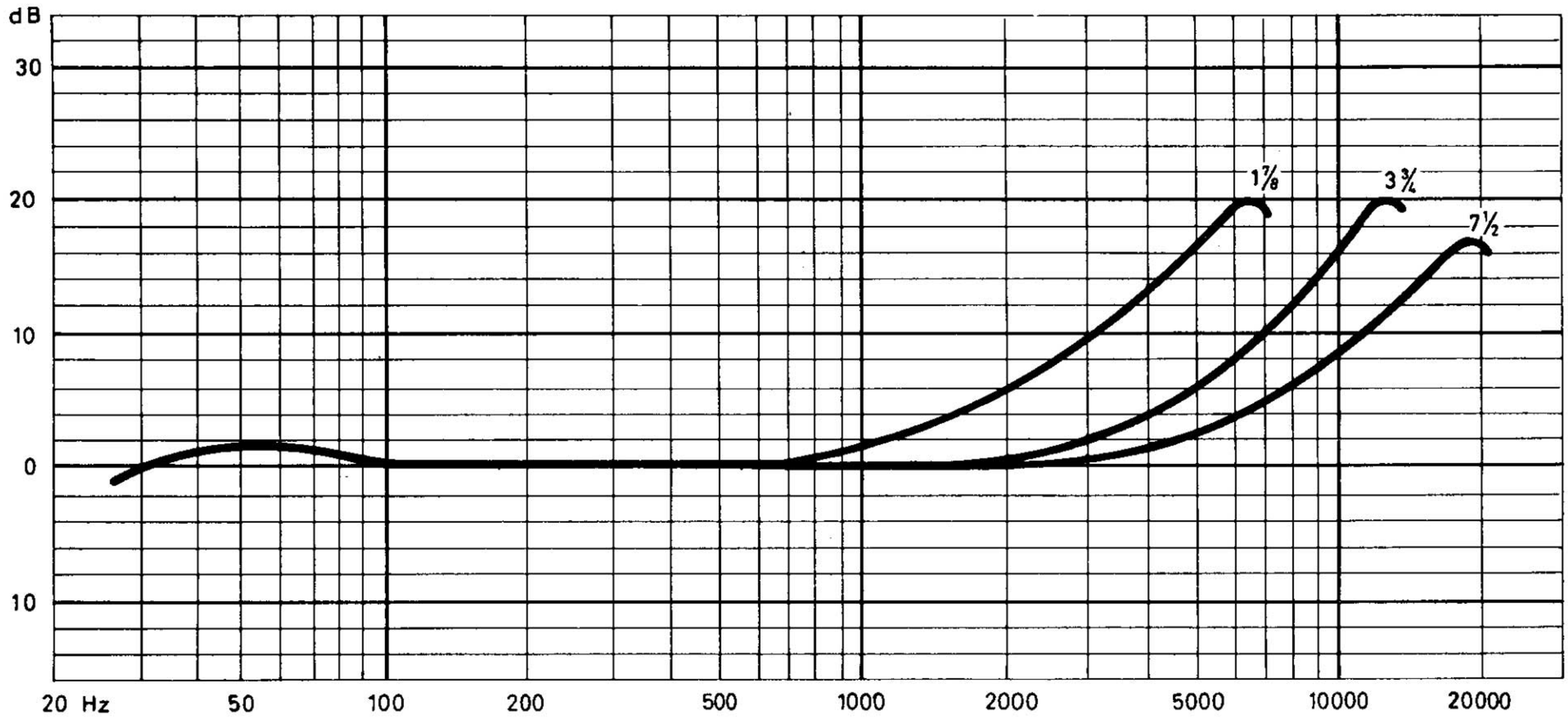

Fig. 43. The response curves for the equalizing amplifier in record position.

5.1.5 The equalizing amplifier in PLAYBACK position

The equalizing amplifier in playback position is shown in fig. 44. The playback equalization is obtained by the following circuits.
The negative feedback circuit from the emitter of Q109 to the emitter of Q107, forms the playback response shown in fig. 45. The capacitor C128 forms the playback curve in the range from 70 c/s to approx. 300 c/s. The high frequency response is obtained by the serial resonance circuit L1, C125, R136 and R133. C186 is introduced to form a part of the high frequency response of the playback equalizing amplifier. The resistor R206 parallel to the resistors R138 and R140, forms the low frequency response, below 70 c/s. C131 is introduced to prevent transient oscillations in the transistor Q109.
The components are referred to 7½ i.p.s. tape speed. The equalization switch is linked to the speed selector knob, and correct equalization for the different speeds will be obtained automatically when the speed is changed.
The speed equalization is obtained by the resistors R134 and R137 and capacitors C124 and C128 in 3¾ i.p.s. tape speed.
In $1^7/_8$ i.p.s. the speed equalization is obtained by the resistors R132 and R135, and capacitors C123 and C128.
The output signal from the playback amplifier is fed to the output amplifier via the switche F12 and the volume control R1.

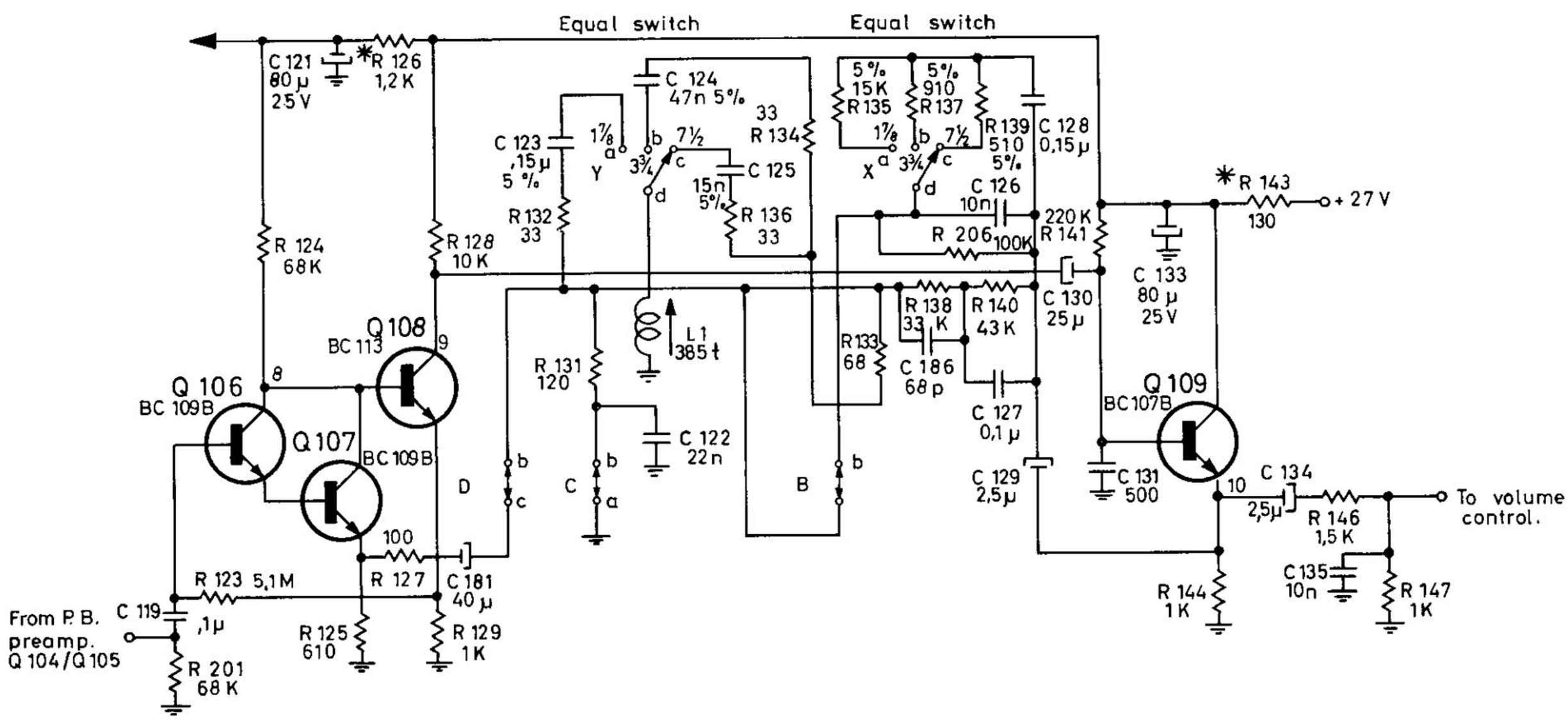

Fig. 44. The equalizing amplifier in playback position, schematic.

www.hifiengine.com

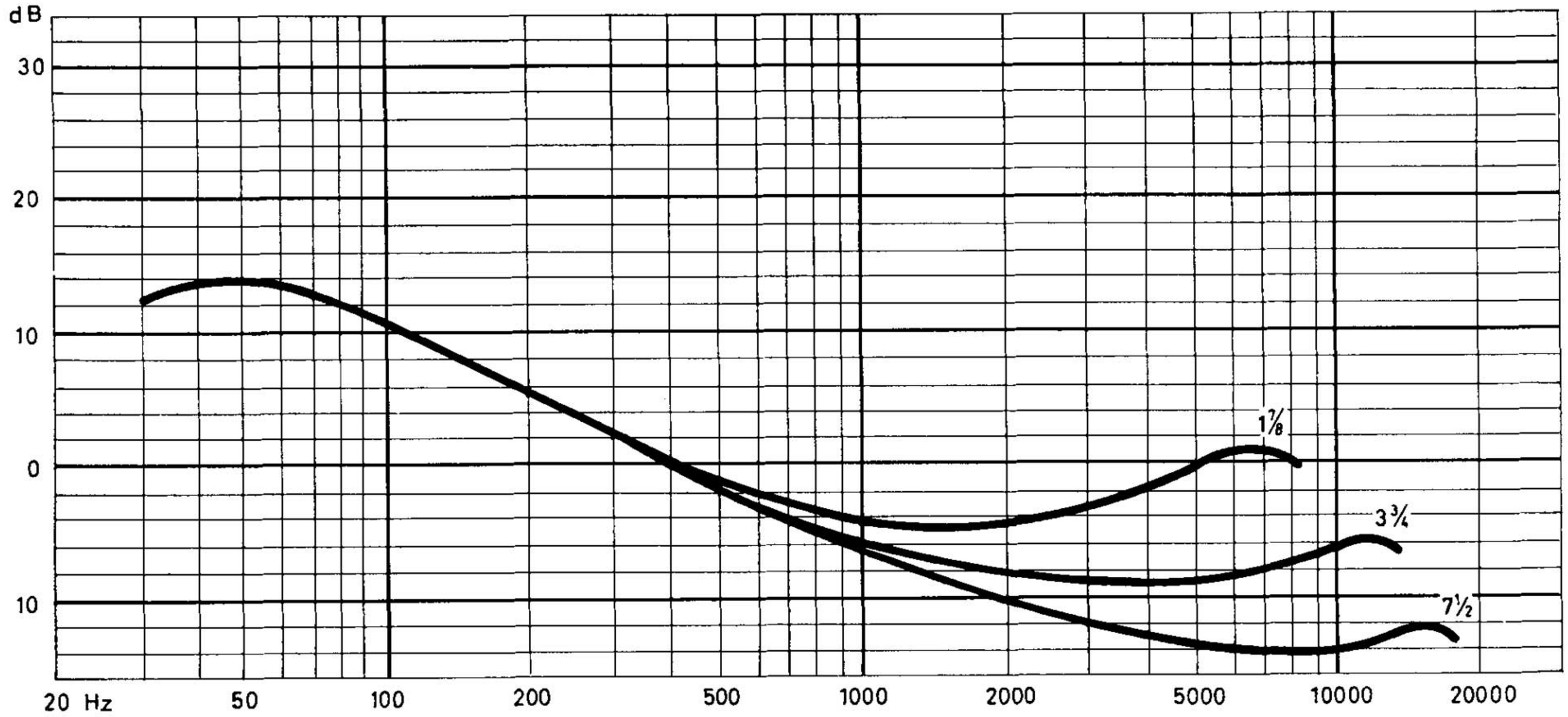

Fig. 45. The response curves for the equalizing amplifier in playback position.

5.1.6 The equalizing amplifier in AMPLIFIER position

The equalizing amplifier in amplifier position is shown in fig. 46. A negative feedback circuit is connected from the emitter of Q109 to the emitter of Q107 which decreases the amplification approx. 34 dB. C131 is introduced to prevent transient oscillations in the transistor Q109.
The signal is fed to the power amplifier via the switch AI3. The frequency response of the equalizing amplifier in AMPLIFIER position is flat within the audio range.

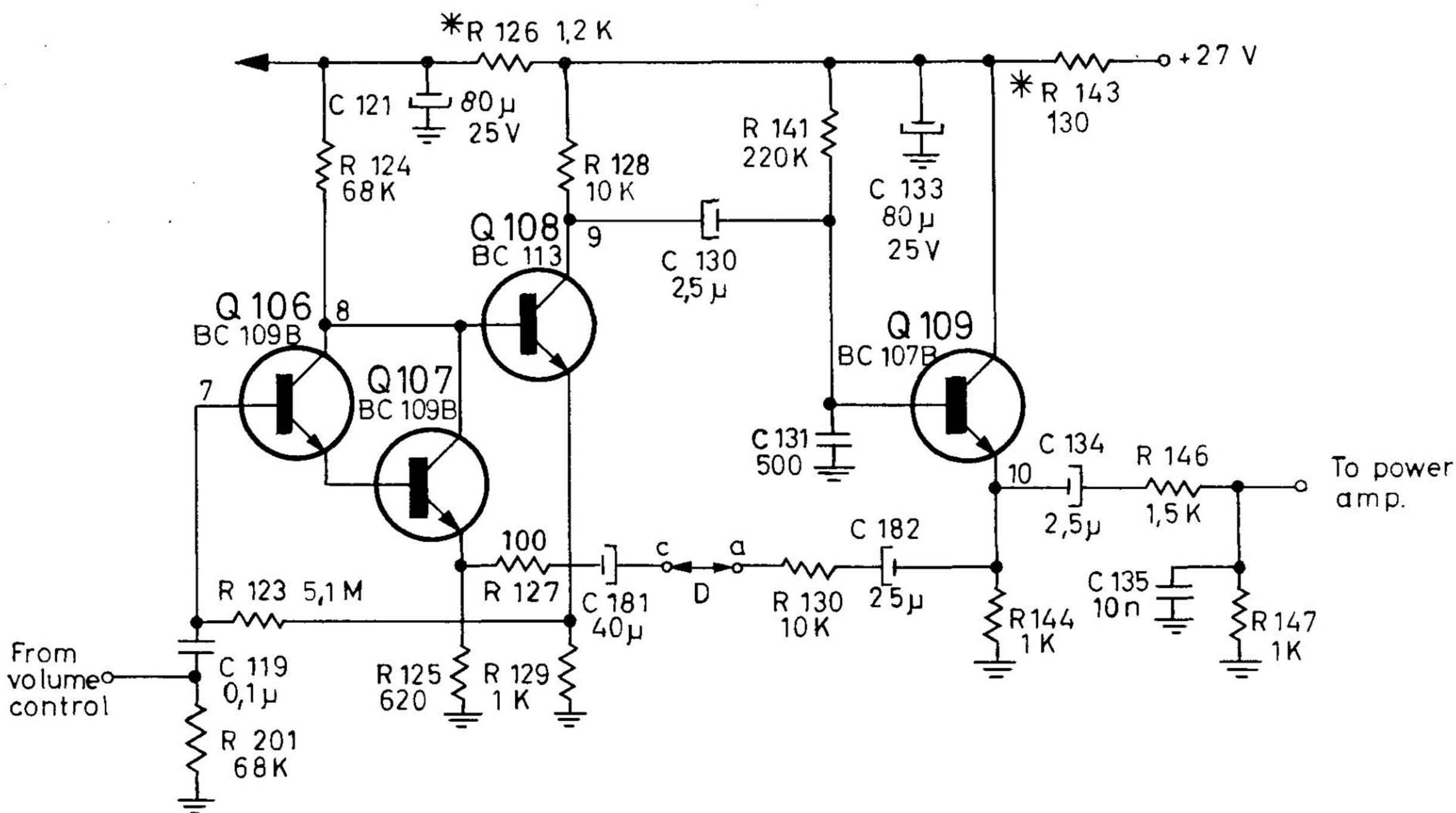

Fig. 46. The equalizing amplifier in amplifier position, schematic.

www.hifiengine.com

5.1.7 The power output amplifier

The power output amplifier is shown in fig. 47. The output stage is a single ended push-pull amplifier class B. Q301 and Q302 are connected in common emitter connection and drives the inverter stage.

The phase inverter stage consists of the complementary transistors Q303 and Q304. The quiescent current of Q305 and Q306 is adjusted by means of R310. The center voltage of the transistors Q305 and Q306 is adjusted by R305.

The treble and bass controls are obtained by the frequency dependent negative feedback circuit from the output of the amplifier to the emitter of Q301. The potentiometer R4 together with C302 forms the treble control while the potentiometer R5 together with C303 forms the bass control.

The temperature stabilizing of the phase inverter stage Q303 and Q304 and the output stage Q305 and Q306 is obtained by the NTC resistor (negative temperature coefficient resistor) R311. The output signal is fed to the speaker (left channel) via C308.

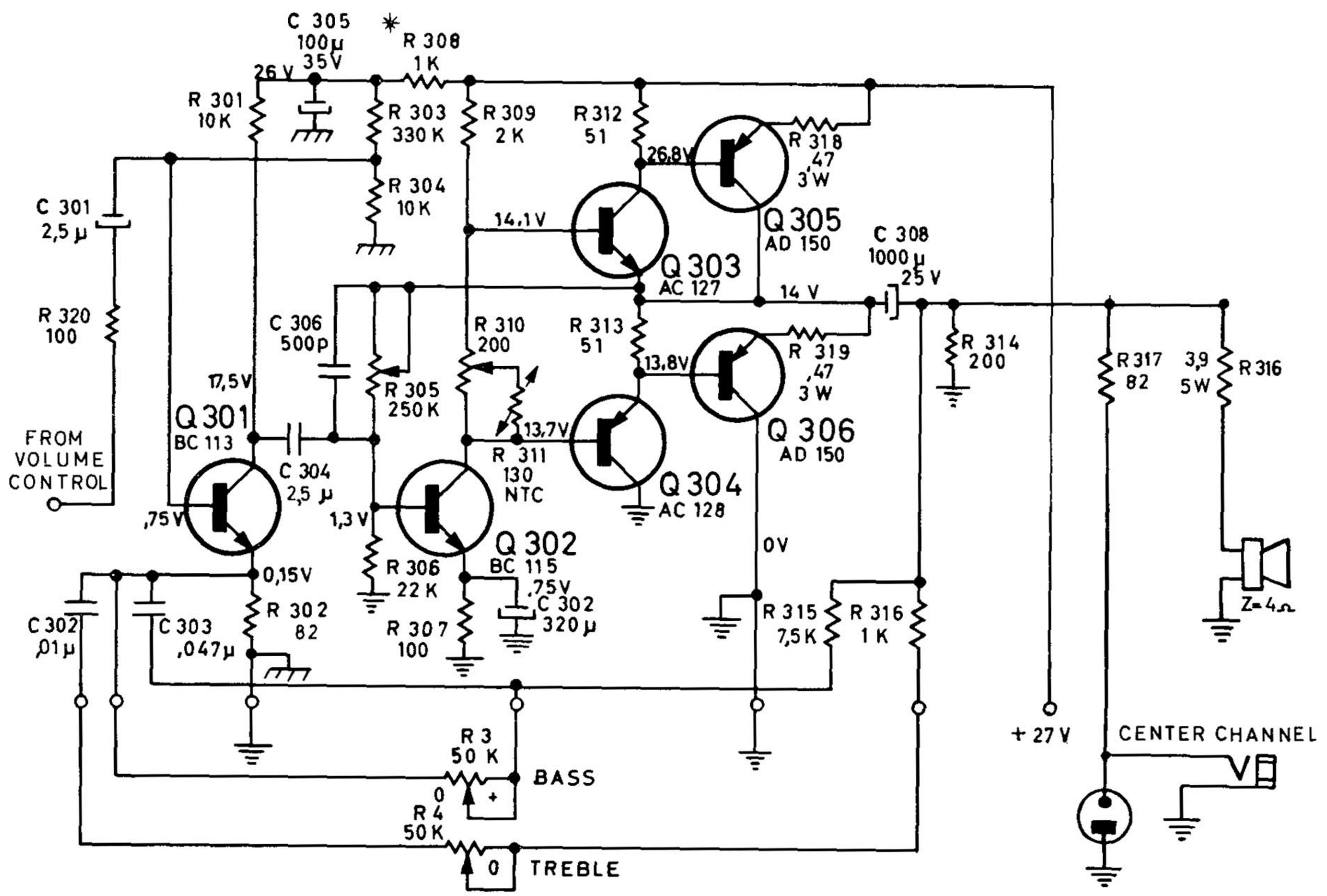

Fig. 47. The power output amplifier, schematic.

www.hifiengine.com

5.1.8 The playback pre-amplifier

The schematic for the playback pre-amplifier is shown in fig. 48. The playback pre-amplifier is a two stage transistor amplifier consisting of Q104 and Q105. Both transistors are connected in common emitter connection.
The bias voltage of the transistor Q104 is obtained by the resistor R118 which is connected across R122.
C113 works as a filter for high frequency signals. The stabilizing negative feed back R117 and C114 from the collector of Q105 to the emitter of Q104 is frequency independent. C114 is a filter capacitor for high frequency signals. The signal from Q105 is fed via C118, the contacts GI2 and C119, to the base of Q106.
The frequency response of the playback pre-amplifier is flat from 40 c/s to 20 000 c/s.

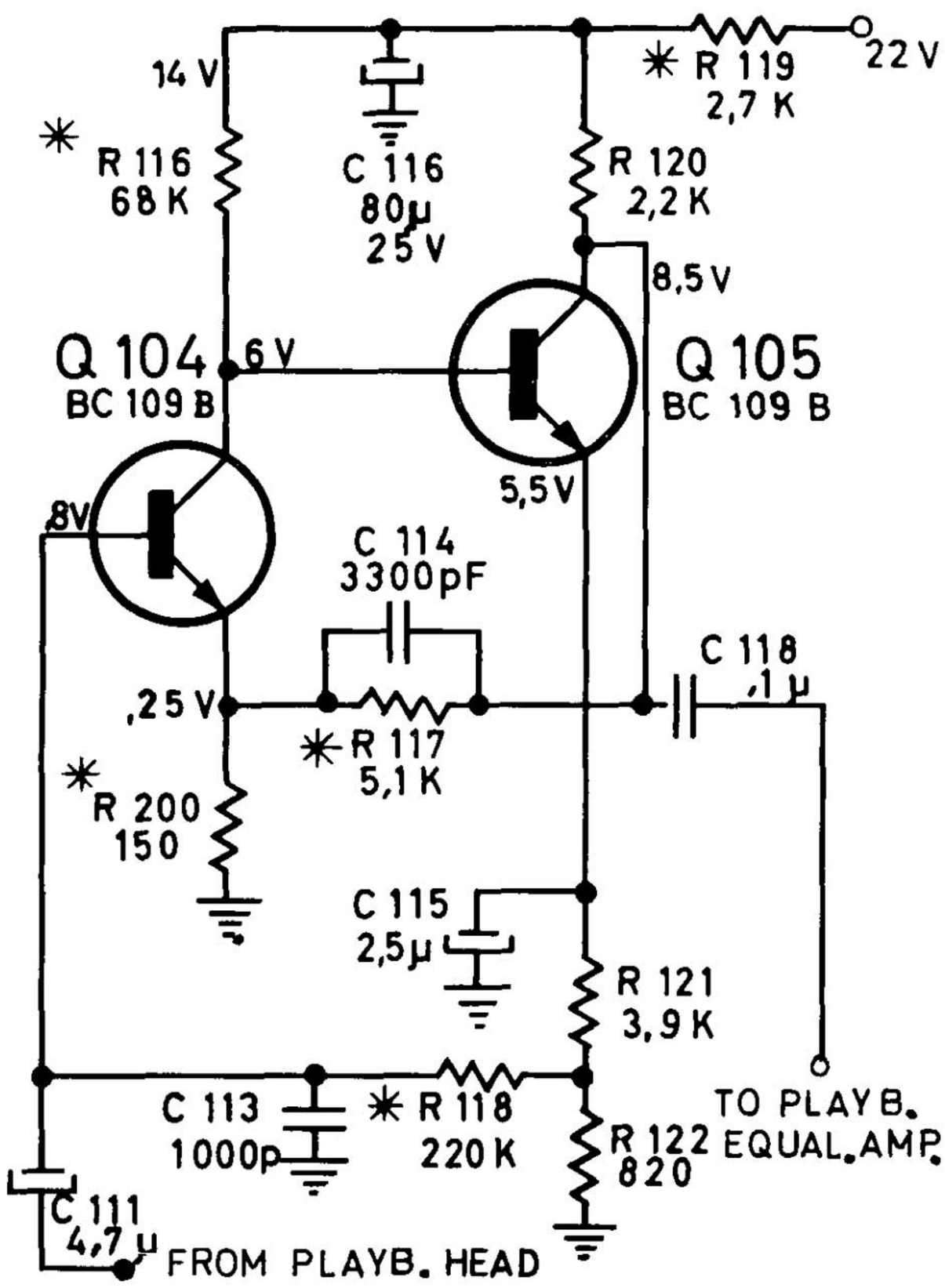

Fig. 48. The playback pre-amplifier, schematic.

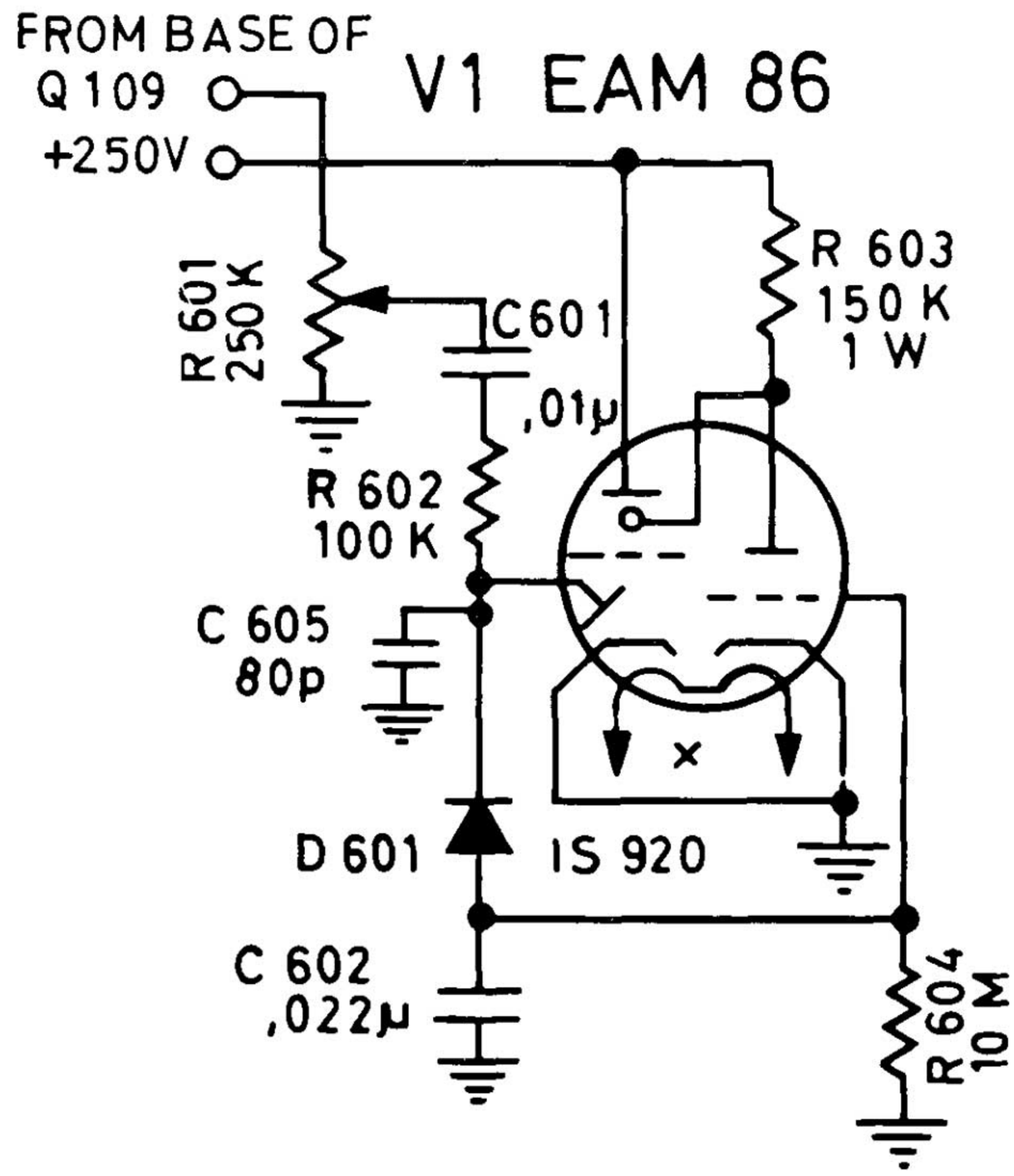

Fig. 49. The indicator circuit, schematic.

5.1.9 The record level indicator circuit

The schematic for the record level indicator circuit is shown in fig. 49. The EAM86 is a combined rectifier, triode and indicator tube. The input of the indicator circuit is connected to the center-tap of the potentiometer R601.
The signal is rectified bye the double rectifier, consisting of the diode section of EAM86 together with D601. The DC signal is filtered by the damping circuit R604 and C602, and is then connected to the grid of the triode amplifier section.
The capacitor C605 is a filter capacitor for H.F. signals. The record level indicator is adjusted by R601 to close at a recording level corresponding to 5 % distortion from a recorded tape (400 c/s), when played back.

www.hifiengine.com

5.1.10 The oscillator, bias and erase circuit

The schematic for the oscillator is shown in fig. 50. The oscillator is of the push-pull type, using two transistors Q110 and Q111.
The DC supply is fed to the center-tap of the transformer T3. Variation of the output voltage from the oscillator, caused by the variation of the oscillator load between monaural and stereo recording, is compensated by the dummy load R148, C112 and L3.
The oscillator frequency is adjusted to 85,5 kc/s by the trimming capacitor C120. The bias current from the oscillator to the record heads, is adjusted by the trimming capacitors C10 and C11.
The schematic shown in fig. 50 is valid for the four-track version, while the figures mentioned in paranthesis are given for the two-track version.
Ref. modification list para 5.9.

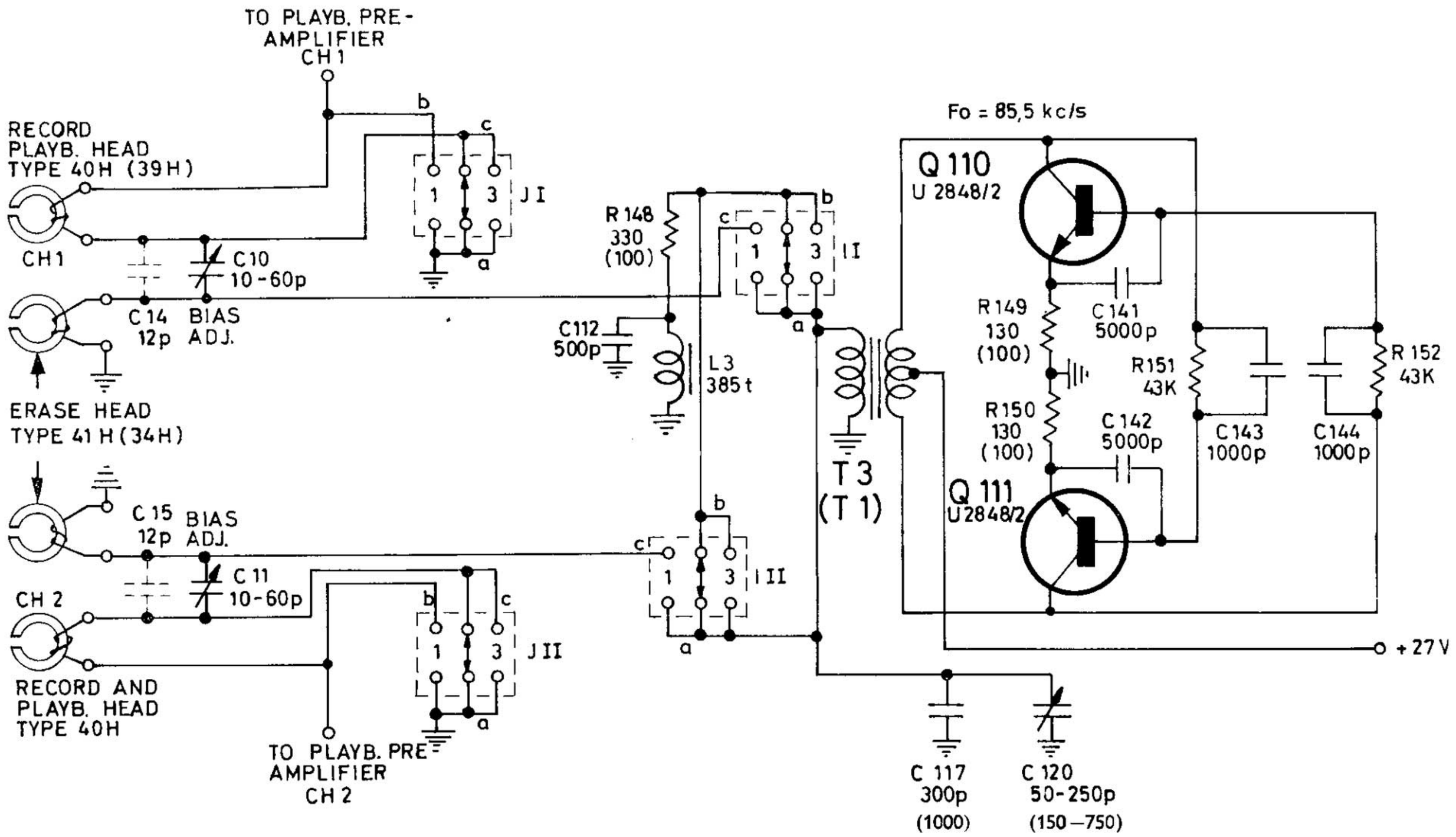

Fig. 50. The oscillator, erase and bias circuit, schematic.

5.1.11 The power supply

The schematic for the power supply is shown in fig. 51. The stabilizing of the line voltage (+27V) is obtained by the three transistors Q1, Q501 and Q502 and the zener diode D501.
Q1 works as a variable resistor. When the line voltage load increases, the impedance of transistor Q1 will decrease to stabilize the line voltage. Q502 is a DC connected amplifier controlled by the line voltage variations using the zener diode D501 as a voltage reference.
The signal is inverted in Q502 and fed to the base of Q501. Q1 is controlled by Q501. When the line voltage is shortcircuited the emitter-bias current of Q501 will disappear (R504 is grounded). This will cause the impedance of Q1 to increase thus protecting the rectifier. When the shortcircuit is removed, the transistor Q501 will again control Q1 due to a slight "starting-up" emitter-base current obtained by R503 connected directly to the rectifier. This emitter-bias current is very low and insignificant for the control process. The maximum current available from the rectifier is limited by the resistor R501. By increasing this resistor maximum available current will decrease.
C503 is installed to prevent noise from the zener diode. The capacitor C501 is introduced to prevent transient oscillations.
The N.T.C. (negative temperature coefficient) resistor is introduced to prevent thermical run-away.
The 165 volt secondary winding is connected to the rectifier B250 and furnishes the high voltage to the indicator tubes EAM86 and the motor. The 32 volts secondary winding is connected to the rectifier B40 and furnishes all the line voltages to the transistor boards. The 6,3 volt secondary winding furnishes the AC filament voltage to the indicator tubes EAM86.

www.hifiengine.com

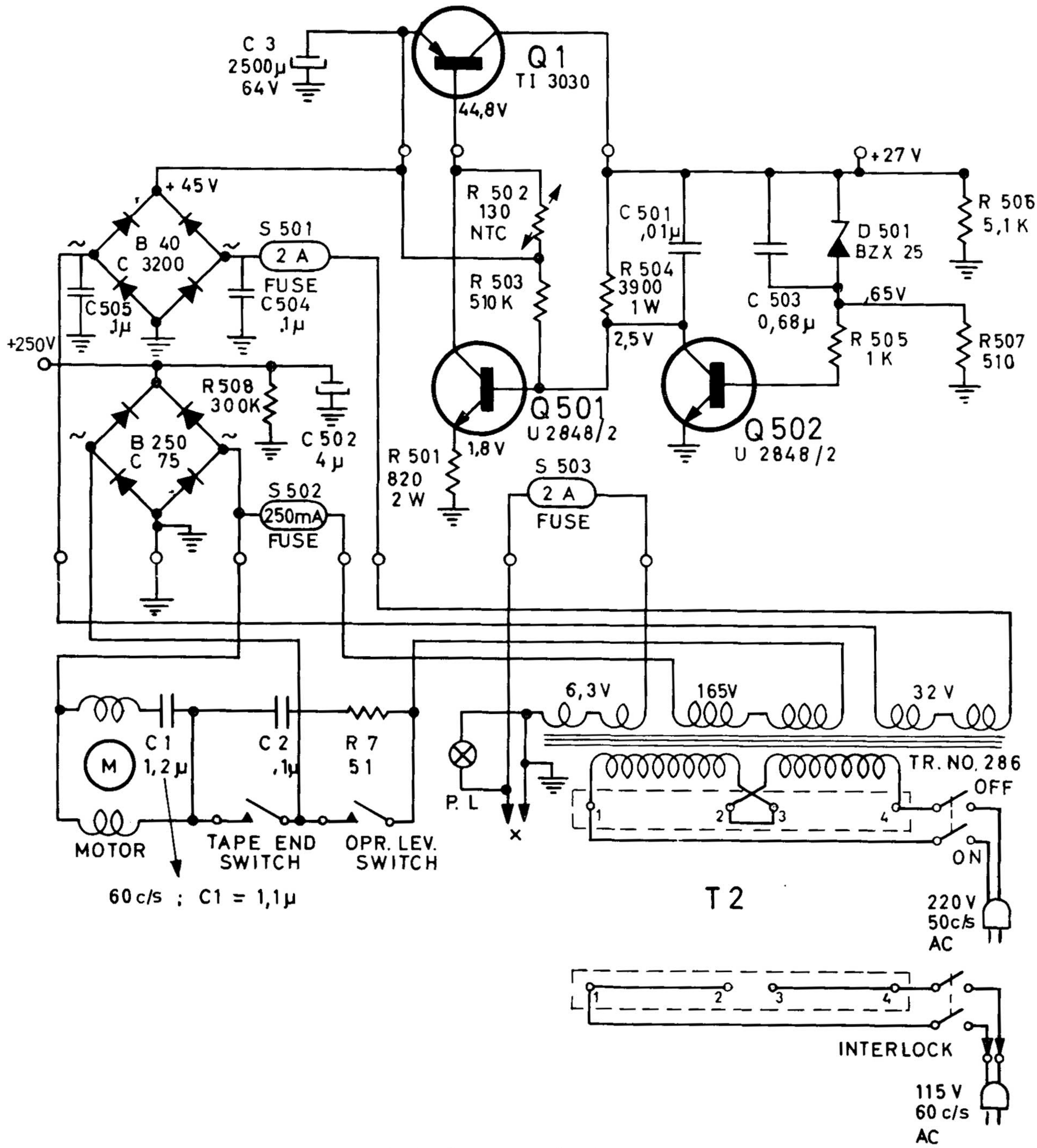

Fig. 51. The power supply, schematic.

5.2 THE SWITCHING SYSTEM

Ref. block diagram fig. 39.

5.2.1 The function selector switch

The function selector switch has two levers (Ch. 1 and Ch. 2). Each of the levers has the following three positions, RECORD, PLAYBACK and AMP. The two levers can be operated individually. An interlock system has been introduced between the operating lever and the two levers for the function selector switch to prevent unintentional erasure.

www.hifiengine.com

5.2.2 The speaker selector switch

The fig. 52 shows the speaker selector switch in playback position. The switch has five positions.
EXT: External speakers only. Ch. 1: left speaker, ch. 2: right speaker.
EXT + INT: External and internal speakers. Ch. 1: left speakers, ch. 2: right speakers.
INT: Internal speakers only. Ch. 1: left speaker, ch. 2: right speaker.
CH 1, EXT, CH 2, INT: The output from ch. 1 is connected to both external speakers. The output from ch. 2 is connected to both internal speakers.
CH 2, EXT, CH 1, INT: The output from ch. 2 is connected to both external speakers. The output from ch. 1 is connected to both internal speakers.

Note:

The resistors R210 – 82 ohms (ch. 1) and R211 – 82 ohms (ch. 2) are connected in series with the output of the power amplifiers, when the function selector switch is in RECORD position. The programme that is being recorded will be monitored with a reduced output through the internal speaker or external speaker terminals, depending on the position of the speaker selector switch. R210 and R211 are short-circuited by the mode switches, NI-2–3 and NII-2–3 when the function selector switches are moved to PLAYBACK or AMP position.

5.2.3 Monaural recording on ch. 1 or ch. 2

Ref. block diagram fig. 39.
We presume that we are recording on ch. 1 (upper track). The input signal is fed to the microphone jack ch. 1. The function selector switch ch. 1 is in pos. RECORD and the function selector switch ch. 2 is in position AMP. The speaker selector is set to pos. INT. The signal passes through the record pre-amplifier ch. 1 and via the volume control of the record equalizing amplifier via the record current potentiometer to the record head. The record level indicator and the erase head ch. 1 are both activated.
The resistor R210 (82 ohms) is connected in series with the internal speaker ch. 1 and the recording signal will be monitored with a reduced output through this speaker.
The input of the equalizing amplifier ch. 2 is connected to the output from the record pre-amplifier ch. 1. The power output amplifier ch. 2 is connected to the internal speaker ch. 2. Ch. 2 is operated as an amplifier controlled by the volume control ch. 2. The procedure for monaural recording on ch. 2 is exactly the same as explained above except that the function selector switch ch. 1 is set to AMP position and the function selector switch ch. 2 is set to position RECORD.

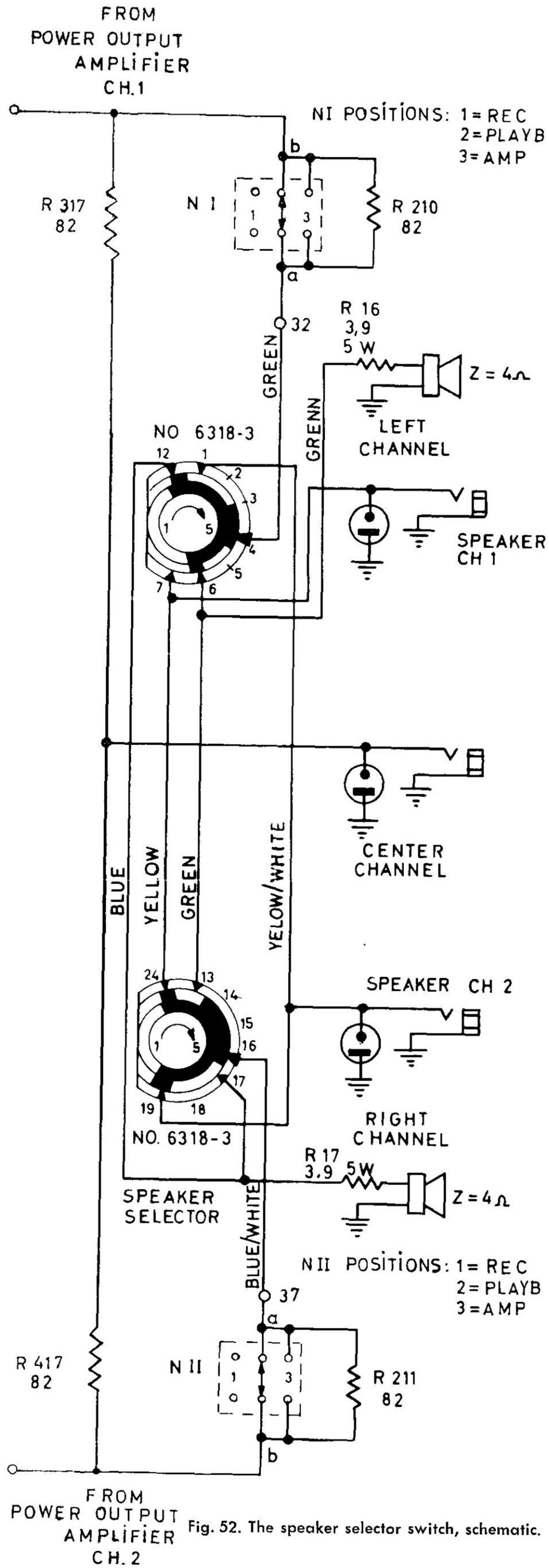

Fig. 52. The speaker selector switch, schematic.

5.2.4 Mixing during monaural recording

Ref. block diagram fig. 39.

We presume that the mixed programme (programme 1 and 2) is to be recorded on channel 1 (upper track). Programme 1 is connected to the line input ch. 1 and programme 2 is connected to the line input ch. 2.

The outputs from the two record preamplifiers are connected in parallel when the function selector switch ch. 1 is set to position RECORD and the function selector switch ch. 2 is set to position AMP. The two programmes are mixed and fed to the record equalizing amplifier and the record head ch. 1. The record gain is controlled by the volume control ch. 1 and the input of the equalizing amplifier in amplifier position ch. 2 is connected parallel to the input of the record equalizing amplifier ch. 1. The power output amplifier ch. 2 is connected to the internal speaker when the speaker switch is set to position INT.

The mixed programme will be monitored through both internal speakers with a reduced output through the speaker ch. 1. The output gain of the internal speaker ch. 2 is controlled by the volume control ch. 2.

The procedure for recording the mixed programme on ch. 2 is the same as outlined above, with the function selector switch ch. 1 in position AMP and the function selector switch ch. 2 in position RECORD.

NOTE: The line inputs are disconnected when the corresponding microphone plug is inserted.

5.2.5 Stereo recording

Ref. block diagram fig. 39.

The two function selector switches (ch. 1 and ch. 2) are set to RECORD position and the speaker selector switch to INT.

The two signals (ch. 1 and ch. 2) pass through each record pre-amplifier and record equalizing amplifier to the record heads.

The connection between the outputs from the record pre-amplifiers and the connection between the inputs of the record equalizing amplifiers are disconnected in stereo recording.

The internal speakers (ch. 1 and ch. 2) are connected in series with R210 and R211 to the output of the power output amplifiers. We are monitoring the recording signal with a reduced output.

5.2. 6 Monaural playback, channel 1 or 2

Ref. block diagram fig. 39.

We presume that the recorded programme is played back from ch. 1.

The function selector switch ch. 1 is set to position PLAYBACK and the function selector switch ch. 2 is set to position AMP. The speaker switch is in position INT.

The output from the playback pre-amplifier ch. 1 is connected to the input of playback equalizing amplifier ch. 1. The output from the playback equalizing amplifier ch. 1 is connected to the power output amplifier ch. 1 and to the input of the equalizing amplifier ch. 2 in amplifier position, the signal is then fed to the power output amplifier ch. 2. The programme will be reproduced through both internal speakers, and through both pre-amp output terminals.

The procedure for playback from ch. 2 is exactly the same as explained above except that the function selector switch ch. 1 is set to AMP position and function selector switch ch. 2 is set to position PLAYBACK.

5.2.7 Stereo playback

Ref. block diagram fig. 39.

Both function selector switches (ch. 1 and ch. 2) are set to position PLAYBACK and the speaker switch is set to position INT. The connection between the outputs of the record pre-amplifiers is disconnected.

The signals will pass each playback pre-amplifier, playback equalizing amplifier and power output amplifier. The stereo programme will be played back through both internal speakers and through both pre-amp output terminals.

5.2.8 Stereo amplifier

Ref. block diagram fig. 39.

The function selector switches ch. 1 and ch. 2 are set to position AMP. The signals pass each record pre-amplifier, equalizing amplifier and power output amplifier. The signals are then fed to the speakers. The connection between the outputs from the equalizing amplifiers is disconnected. The output gain is controlled by the volume controls (upper knob ch. 1, lower knob ch. 2).

5.2.9 Add a track

Ref. block diagram fig. 39.

The "add a track" recording is a technique of playing back a pre-recorded programme from one channel, and record another programme on the other channel at the same time. Both programmes will be heard simultaneously when the tape is played back in stereo. We presume that the pre-recorded programme is recorded on ch. 1. The function selector switch ch. 1 is set to position PLAYBACK, and the speaker selector switch is set to position INT. The signal will pass the playback pre-amplifier, the playback equalizing amplifier and the power output amplifier and fed to the internal speaker ch. 1. The playback equalizing amplifier is operative. The recording is made on ch. 2 and the recording signal may be connected to either of the input terminals ch. 1, ch. 2 or both.

The function selector switch ch. 2 is set to RECORD position. The outputs from the record pre-amplifiers are connected and the signal passes the record equalizing amplifier and is fed to the record head ch. 2.

The recording signal is monitored through the internal speaker ch. 2 with a reduced output.

The "add a track" recording used for language teaching

Language teaching is a typical example of the use of "add a track" recording, the lesson (master track) is prerecorded on the tape and the student can playback, listen to the lesson, monitor and record his own exercises. The playback must be in stereo, and the

www.hifiengine.com

master track is then reproduced from one channel, and the student's track from the other. The playback can be heard in two loudspeakers or mixed through the center channel in the earphones. The student is able to record and erase his own exercise at will, with no interference to the master track.

Procedure

We presume that the pre-recorded master programme is recorded on ch. 1 (upper track). Set the function selector switch ch. 1 to «PLAYBACK» position, and the speaker selector switch to «EXT». The master's voice will be heard in the earphones, which are connected to the center channel output, when the tape recorder is started. The level is adjusted with the upper volume control knob. The recording of the student's voice is made on ch. 2 (lower track). Set the function selector switch ch. 2 to «RECORD» position simultaneously with the operating lever being moved to normal forward drive position. The level of the recording is adjusted with the lower volume control knob. The student will monitor his own voice in the earphones with the volume determined by the recording level.

Rewind the recorded tape and play it back with both function selector levers in pos. «PLAYBACK» (stereo playback). The levels from the two channels can be set individually with the volume control knobs.

The operation will be analogical if the master programme is recorded on ch. 2 (lower track). It is also possible to use the internal loudspeakers, at a limited level, for language studing groups. The feedback between the internal loudspeakers and the microphone will decide the maximum level applicable.

5.2.10 Sound on sound

Ref. block diagram fig. 39.

Sound on sound recording is a technique where a programme is played back from one track and simultaneously a second programme is added, the two programmes being recorded combined on another track. (One superimposed on the other.) Consequently the playback of the combined programme must be in mono. In «add a track» where two programmes are on two separate tracks the playback must be in stereo. In «sound on sound» one has the possibility of building up a complete programme from separate sources, however the sound quality may be slightly reduced by many re-recordings.

The series 12 has limited possibilities for sound on sound recordings. These taperecorders are equipped with combined record and playback heads, and there will always be some magnetic coupling between the head which is recording and the head playing back. When the sound on sound recording is made, the output from the playback channel is connected to the input of the recording channel. If the loop amplification from the playback head to the recording head is too great the feedback between the two heads will cause instability and oscillations. The tape speed 7½ i.p.s. is recommended for this purpose. Sound on sound recordings can only be completely satisfactory on a taperecorder with separate record and playback heads, i.e. Tandberg Tape Recorder Models 64 and 62. If in spite of this, you wish to record sound on sound on the series 12, you must first find out where the oscillation limit is and keep your volume controls below this limit.

Preferred instruction for sound on sound recording

We presume that the pre-recorded programme is recorded on ch. 1. The power output terminals ch. 1 is connected to the line input ch. 1 by a strap. The speaker selector switch is set to EXT position. The function selector switch ch. 2 is set to RECORD position and the operating lever is moved to normal forward drive. The function selector switch ch. 1 is set to PLAYBACK position.

The volume control ch. 2 (lower knob) is adjusted to maximum recording level from the microphone with the start-stop lever in STOP position and with the volume control ch. 1 set to minimum. The is a test recording and the tape is not moving. The recording level for ch. 2 is now pre-set and should not be touched during the actual recording. Move the start-stop lever to left position and start the recording. Increase the setting of the volume control ch. 1 (upper knob) up to a point just below complete closing of the record level indicator ch. 2 (the point of instability). The pre-recorded programme on ch. 1 is played back through the playback pre-amplifier and the playback equalizing amplifier and to the power output amplifier. The signal is fed to the line input ch. 2 by the strap. The two outputs from the record pre-amplifiers are interconnected. The pre-recorded programme and the programme from the record pre-amplifier ch. 2 are both fed to the input of the record equalizing amplifier and the record head ch. 2. Rewind the tape when the recording is completed, and play back the sound on sound recording with the function selector switch ch. 2 in PLAYBACK position (monaural playback ch. 2).

5.3 HEAD ALIGNMENT AND TRACK CONTROL WITH TANDBERG TEST TAPES

5.3.1 The models 12—4 and 12—2

1. Demagnetize the heads and the adjacent parts before aligning the heads.
2. Move the operating lever to normal forward drive with a tight tape inserted. Align the vertical position of the adjustable tape guide (79.31) until the tape runs equidistant from the flanges of the tape guide. Ref. fig. 11.
3. Play back the test tape No. 1. This is a full track pre-recorded tape with 1000 c/s recorded at 7½ i.p.s. tape speed. The record level of the exact area corresponding to track 3 is reduced 30 dB. Adjust the height of the combined record/playback head until minimum output is obtained on a VTVM from track 3.
4. Play back the test tape No. 2. This is a full track pre-recorded tape with 10 000 c/s at 7½ i.p.s. tape speed. Adjust the azimuth position of the com-

www.hifiengine.com

bined record/playback head until maximum reading is obtained on both output meters. Ref. chapter 5.4.3 for lateral adjustment.

5. Play back the test tape No. 3. This is a full track pre-recorded tape with the following frequencies: 250 - 10 000 - 5000 - 1000 - 100 - 50 - 250 c/s recorded at 7½ i.p.s. tape speed. The tape conforms with the N.A.B. standards. The output tolerance is ± 2 dB for all frequencies. The difference in level between the two channels should be less than 3 dB at any frequency.
6. The erase head is set in a preliminary position where approx. 0,25 mm (.01″) of the ferrite core for the upper track is visible above the tape. Insert the test tape No. 9, and record a 1000 c/s signal from the generator on channel 2 (track 3) at maximum recording level. Dip the tape into the Magna-See solution and check that the re-recorded track is in center of the erased area. Adjust the height position of the erase head if necessary. Make sure that the erase head does not erase any part of the neighbour track. Ref. chapter 5.4.4 for lateral adjustment.
7. Ref. chapters 5.7.11 and 5.7.10 for setting of the bias and the recording current.

5.3.2 The model 12—2

All the alignments specified in chapter 5.3.1 are valid for the model 12—2 with the exeption of the paragraphs 3 and 6. Paragraph 3 is superceded by the instruction 5.6.2, and paragraph 6 is superceded by the instruction 5.6.1.

5.4 HEAD ALIGNMENT WITHOUT TANDBERG TEST TAPES

5.4.1 Demagnetizing

Demagnetize the heads and adjacents parts before aligning the heads.

5.4.2 The adjustable tape guides

Ref. fig. 11.

The adjustable tape guide 79.15:

Move the operating lever to normal forward drive with a tight tape inserted. Align the vertical position of the adjustable tape guide (79.15) until the tape runs equidistant from the flanges of the tape guide.

The adjustable tape guide 79.31:

Move the operating lever to normal forward drive with a tight tape inserted. Align the vertical position of the adjustable tape guide (79.31) until the tape runs equidistant from the flanges of the tape guide.

5.4.3 The record/playback head

The height alignment:

The height of the record/playback head is aligned by the height adjustment screws, ref. fig. 11. The upper edge of the tape shall run flush with the upper part of the airgap for ch. 1. Ref. chapters 5.5.1 and 5.6.2, for track control of the record/playback head.

The azimuth alignment:

Play back a standard azimuth alignment tape with a VTVM connected to each external speaker output terminal. Set the speaker switch to position «EXT». Adjust the position of the record/playback head by the azimuth adjustment screw, ref. fig. 11, until maximum reading is obtained on the output meters.

The lateral alignment:

Pull the pressure pad away from the erasure head when the standard azimuth alignment tape is being played back. The output level should not decrease more than 3 dB. Adjust the lateral position of the record/playback head, if necessary, by turning the head mounting plate.

5.4.4 The erase head

The height alignment:

The height of the erase head is aligned by the height adjustment screws. Ref. fig. 11. Approx. 0.25 mm (.01″) of the ferrite core for the upper track of the erase head, should be visible above the tape. Ref. chapters 5.5.2 and 5.6.1, for track control of the erase head.

The azimuth alignment:

Align the azimuth position of the erase head by the azimuth adjustment screw. The erase head should be parallel to the upper mounting plate. The azimuth position of the erase head is not critical.

The lateral alignment:

Turn the head mounting plate for the erase head until the front of the head is parallel to the felt pressure pad.

5.5 TRACK CONTROL, MODEL 12—4 WITHOUT TANDBERG TEST TAPES

5.5.1 The record/playback head

Record a 1000 c/s signal in stereo from a generator at maximum recording level, on track 1 and 3 (both function selector switches in «RECORD» position), for approx. 5 seconds. Turn the tape around and make a similar recording on track 4 and 2. Cut the tape and dip it into a mixture of iron powder and alcohol (Magna-See) to make the recording visible. The spaces between the recorded tracks should be distributed equidistant across the tape. Readjust the height position, if necessary, and recheck the azimuth alignment.

5.5.2 The erase head

Insert a full-track pre-recorded tape and record a 1000 c/s signal from a generator at maximum recording level on track 3 (the function selector switch ch. 2 in «RECORD» position). Cut the tape and dip it into the Magna-See solution. Check that the re-recorded track is in the center of the erased area. Adjust the vertical position of the erase head, if necessary.

www.hifiengine.com

5.6 TRACK. CONTROL, . MODEL. 12—2 WITHOUT TANDBERG TEST TAPES

5.6.1 The erase head

The height of the erase head is aligned by the height adjustment screws. Ref. fig. 11. The tape shall run equidistant from the upper and the lower edge of the ferrite core.
For the azimuth and lateral alignments ref. chapter 5.4.4.

5.6.2 The record/playback head

The height of the record/playback head is aligned by the height adjustment screws ref. fig. 11. Record a 1000 c/s signal in stereo (both function selector switches are set to «RECORD» pos.), at maximum recording level on a full track pre-recorded tape. Dip the tape in the Magna-See solution and check that the tracks are distributed symmetrical across the tape, and that the pre-recorded zone remains in the center of the erased zone. Readjust the erase and record heads, if necessary.
For the azimuth and the lateral alignment ref. chapter 5.4.3.

5.7 ELECTRICAL ADJUSTMENTS FOR TANDBERG TAPE RECORDER MODELS 12—4 AND 12—2

5.7.1 Adjustments of the power output amplifier

Connect the audio generator to the HIGH LEVEL input ch. 1 (ch. 2) and set the frequency to 1000 c/s. A 4 ohms, 15 watts load resistor is connected to the external output terminals ch. 1 (ch. 2). Connect a VTVM and an oscilloscope parallel the load resistor. Set both function selector switches to position AMP. (stereo amplifier). The volume controls R1 — ch. 1 and R2 — ch. 2 should be set to max. and the speaker selector to position EXT.
Set the bass controls and the treble controls to zero.

5.7.2 Adjustment of the output level

Increase the output level from the generator until clipping occurs on the scope. Adjust the potentiometer R305 — ch. 1 (R405 — ch. 2) until symmetrical clipping of the positive and the negative half-periods is obtained.
Decrease the output level from the audio generator until the clipping disappears. The VTVM should then read min. 6,3 volts for both channels (corresponds to 10 watts in 4 ohms). The tolerance of the output level between the two channels is 2 dB.

5.7.3 Quiescent current

Set the volume control R1 — ch. 1 and R2 — ch. 2 to zero. Connect a mA-meter in series with +27 volts supply to the power output amplifier for ch. 1, red wire (ch. 2 red wire). Adjust R310 — ch. 1 (R410 — ch. 2) to 35 mA.

5.7.4 Adjustment of the FM MX-filter.

Connect the test equipment to the tape recorder as described under para. 5.7.1.
Adjust the output of the audio generator until the VTVM reads 1V at 1000 c/s. Set the FM MX-filter switch to position ON.
Set the generator to 19Kc/s and adjust L4 — ch. 1 (L5 — ch. 2) to min. deflection on the VTVM. The attenuation between the signal levels at 1000 c/s and at 19Kc/s should be more than 23 dB.
The adjustment procedure for aligning the 33,3 kc/s FM-MX filter is exactly the same as outlined for the 19 kc/s filter except for the generator frequency which should be set to 33,3 kc/s. The difference in signal level between 1000 c/s and 33,3 kc/s should be more than 18 dB.

5.7.5 Control of the frequency response in AMP. position

Connect the test equipment to the tape recorder as described under para. 5.7.1. Set the FM MX-filter switch to position OFF. Adjust the output level of the audio generator until the VTVM reads 500 mV.
The frequency response: ±2 dB 30—16 000 c/s.

5.7.6 The bass control

The audio generator is set to 1000 c/s. The output level from the generator is adjusted until the VTVM reads 500 mV. Turn the bass control on the tape recorder up to max. (pos. 6). Reset the generator to 100 c/s, the output level from the tape recorder should now increase approx. 10 dB.

5.7.7 The treble control

The audio generator is set to 1000 c/s. The output level from the generator is adjusted until the VTVM reads 500 mV. Turn the treble control on the tape recorder down to min. (pos. 6). Reset the generator to 10000 c/s, the output level from the tape recorder should now decrease approx. 12 dB.

5.7.8 Adjustment of the record current and the electronic beam indicator circuits

Connections:
Connect the audio generator to the HIGH LEVEL input ch. 1 (ch. 2).
Connect the VTVM to the wiper of the volume control ch. 1 terminal 24 (ch. 2 terminal 45).
Set both function selector switches to position REC (stereo record), and move the operating lever to the position normal forward drive at the tape speed 7½ i.p.s.
A 100 ohms resistor is connected in series with the upper (lower) record/playback head to ground ch. 1 (red wire ch. 1, blue wire ch. 2). Set the volume controls to the postion 3. Stop the oscillator by shortcircuiting the secondary windings of the oscillator coil.

5.7.9 The electronic beam indicators

Set the audio generator to 1000 c/s and adjust the output level from the generator until the VTVM reads 50 mV.
Adjust R601 — ch. 1 (R605 — ch. 2) until the electronic beam indicators are closing.

5.7.10 The record current

Connect the VTVM across the 100 ohms resistor in series with the record head. Adjust R14 — ch. 1 (R15 — ch. 2) until the reading on the VTVM is 13 mV. (The reading for the two-track model should be 18 mV.)

www.hifiengine.com

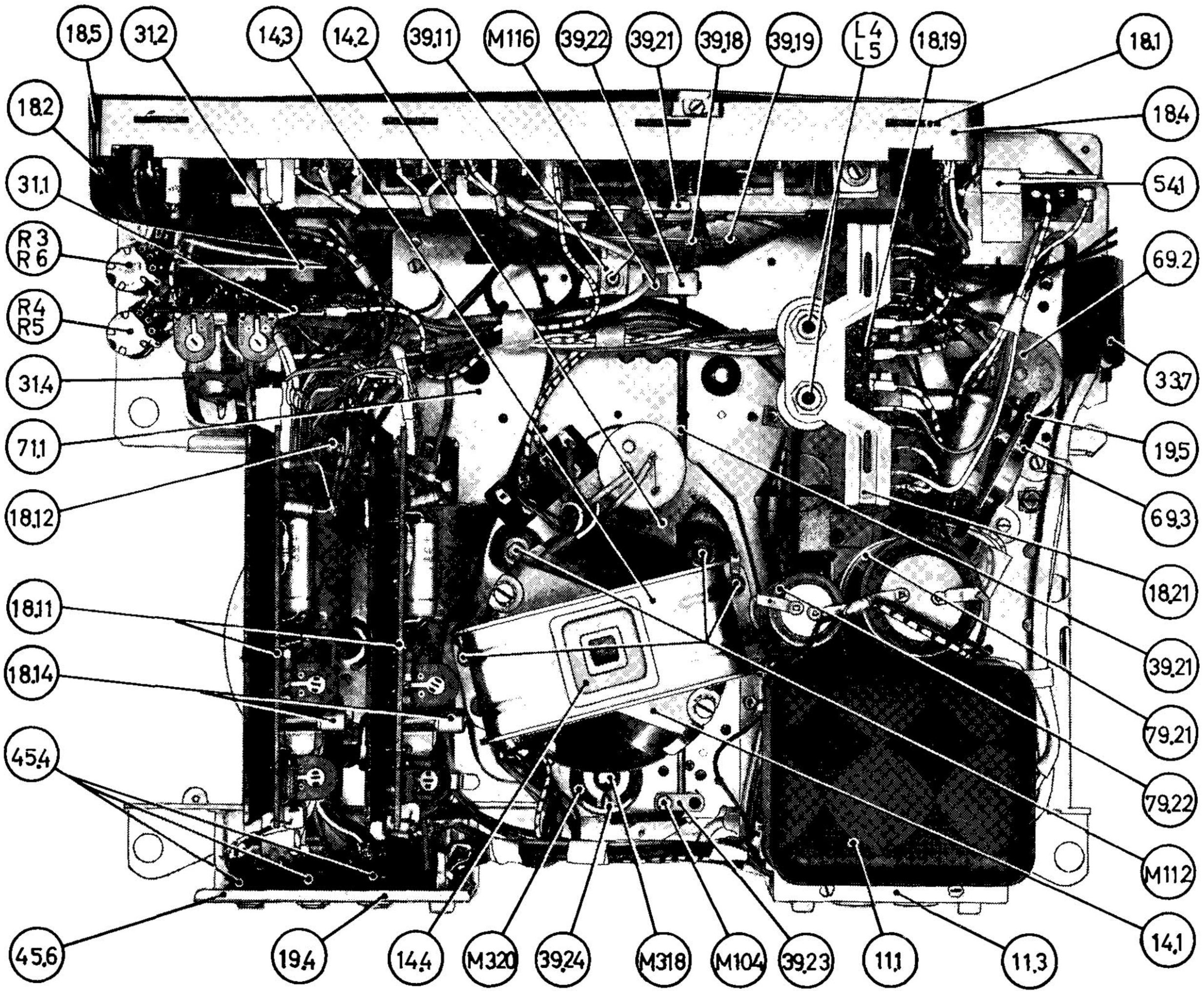

Fig. 53. Bottom view of the tape recorder.

5.7.11 Adjustment of the osc. frequency and the bias.

Connections:

Connect the VTVM and a frequency meter in parallel to a 100 ohms resistor in series with the lower record/playback head to ground (blue wire). Set both function selector switches to REC pos. (stereo recording). Adjust C120 until the frequency meter shows 85,5 Kc/s and adjust C11 until the VTVM reads 65 mV (The reading for the two-track version should be 95 mV).

Connect the VTVM across the 100 ohms resistor now connected in series with the upper record head (ch. 1) the ground (red wire). Adjust C10 until the reading on the VTVM shows 65 mV. (The reading for the two-track version should be 95 mV.) Check the frequency to be 85.5 kc/s and readjust C120 if necessary. Set the function selector switch ch. 2 to PLAYBACK position and adjust L3 until the frequency meter reads 85.5 kc/s.

Set the function selector switch ch. 1 to PLAYBACK position and the function selector switch ch. 2 to RECORD position.

Connect the VTVM and the frequency meter across the 100 ohms resistor connected in series with the lower record head (ch. 2). Check the frequency to be 85.5 kc/s ± 2 kc/s. If the deviation is more than 2 kc/s, L3 must be readjusted to compromise so that the deviation is equal between ch. 1 and ch. 2.

The bias voltage tolerance between mono and stereo is ± 10 %. The HF voltage across the erase head should be 80–110 volts. The tolerance between mono and stereo is ± 10 %.

www.hifiengine.com

5.7.12 Distortion

Connect the test equipment to the tape recorder as described under para. 5.7.1.

Set the function selector switches to REC position (stereo record). Connect the audio generator to the HIGH LEVEL inputs ch. 1 and ch. 2 and adjust the frequency to 400 c/s. Set the volume controls to position 3 and adjust the audio generator until the electronic beam indicators are closing, and make a recording for about 2 min. Rewind the tape and play it back in stereo.
The distortion should be less than 3—5 %. If the distortion is above these tolerances the record current must be readjusted.

Note: If the record current is readjusted it will affect the bias and the oscillator frequency, recheck therefore both the bias setting and the oscillator frequency.

5.7.13 Balance adjustment for the pre-amp. outputs

Use a full track recorded tape 250 c/s (Tandberg test tape no. 3). Set the tape recorder in stereo playback mode. Connect a VTVM to both pre-amplifier outputs. Adjust R20 until both VTVM have the same reading.

5.7.14 Adjustment of the equalization coils L1 and L2

Connect the audio generator to the HIGH LEVEL inputs ch. 1 and ch. 2 and set the frequency to f = 18 000 c/s. Set the speed selector switch to position 7½ i.p.s.

Adjust L1—ch. 1 (L2—ch. 2) to max. deflection on the electronic beam indicators.

5.7.15 Control of the recording curves

Connect the audio generator to the HIGH LEVEL inputs ch. 1 and ch. 2. A VTVM is connected parallel to 100 ohms resistors in series with each record/playback head (ch. 1 and ch. 2) to ground (red and blue wires) ref. adjustment of the record current. Set the tape recorder in stereo recording and switch the FM MX-filter to OFF.
Shortcircuit the secondary winding of the oscillator transformer T3 (T1 on the two-track version).

Tune the generator to 400 c/s and adjust the output level from the generator 20 dB below max. recording level. Check the frequency response according to fig. 43.
The tolerances should be less than ±2.5 dB for all frequencies. The difference in level between the two channels should be less than 3 dB for all frequencies. Check the frequency response for all these speeds.

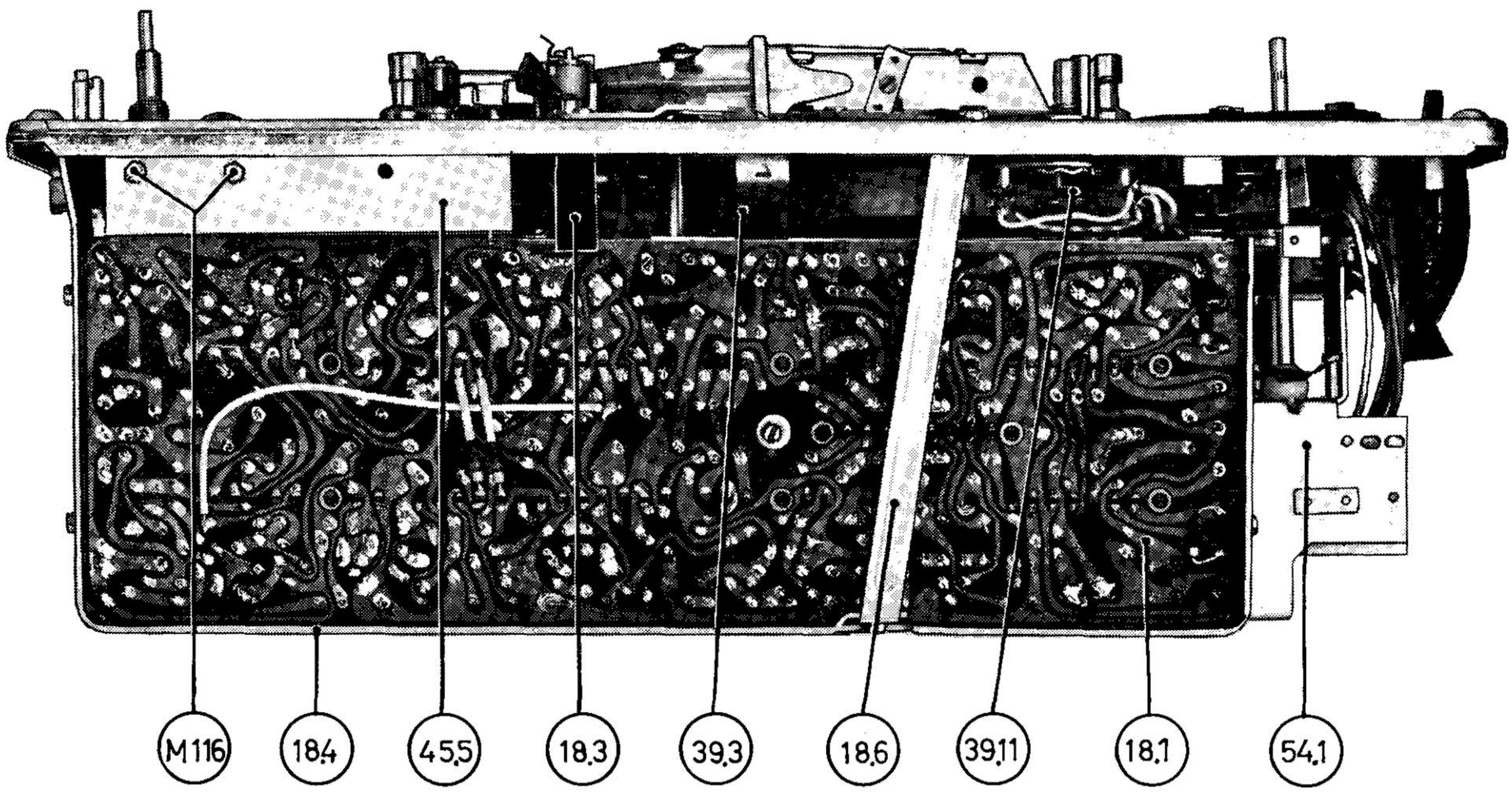

Fig. 54. Front view of the tape recorder.

www.hifiengine.com

5.7.16 Control of the playback curves

Insert a 100 ohms resistor in series with the upper record/playback head (ch. 1) and the lower record/playback head (ch. 2) to ground (black wire). Connect the audio generator in series with a 100 kohms resistor across the 100 ohms resistor ref. fig. 55.
Connect the VTVM and a oscilloscope to PRE.AMP outputs ch. 1 and ch. 2. Move the function selector switches to PLAYBACK position (stereo playback).
Set the speaker selector switch to position EXT.
Use 400 c/s as 0 dB reference level.

Check the frequency response in all three speeds according to fig. 45.

Note: Make sure that the signal is not being clipped by overloading the input. The tolerance should be less than ±2.5 dB at all frequencies. The difference between the two channels should be less than 3 dB.

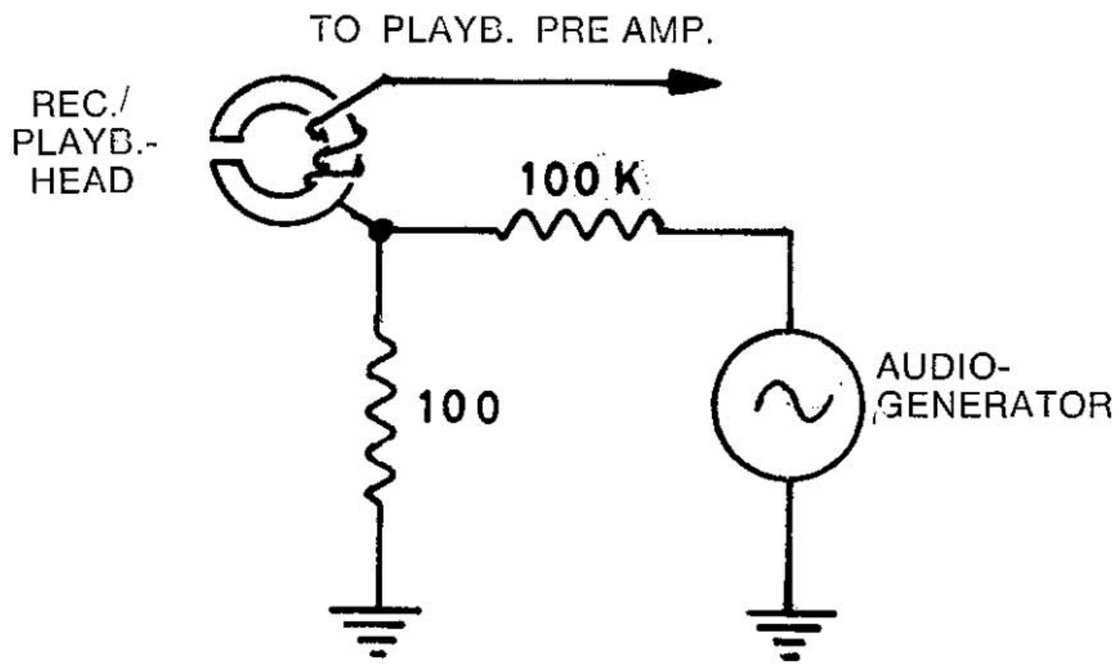

Fig. 55.

5.7.17 Control of the total frequency response

Set both function selector switches to REC. position (stereo recording) and switch the FM Mz-filter off. Insert a good quality tape. The audio generator is connected to both line inputs and tuned to 400 c/s. Turn down the output level from the generator 20 dB below max. recording level and record the frequency spectrum from 40—16 000 c/s at 7½ i.p.s. tape speed. Rewind the tape and play it back with a VTVM connected to both preamp output terminals with the speaker switch in position EXT. and both function selector switches in position PLAYBACK. Check the frequency response for all speeds according to the specifications.

30—20 000 c/s (±2 dB 40—16 000 c/s)
30—13 000 c/s (±2 dB 50—10 000c/s)
30— 7 000 c/s (±2 dB 60— 5 000 c/s)

The difference in level between the two channels should be less than 4 dB at any frequency.
Increase the bias slightly if the treble is too high by adjusting C10 (ch. 1) and C11 (ch. 2). Decrease the bias slightly if the treble response is too low by adjusting C10 (ch. 1) and C11 (ch. 2).
Note:
Recheck the distortion according to para. 5.7.1 if the bias has been reduced.

5.7.18 Power output control

Connect the test equipment to the tape recorder as described under para 5.7.17 except for the VTVM which should be connected across a 4 ohms, 15 watts resitor connected to the external speaker output (ch. 1 and ch. 2) with the speaker selector in EXT. position. Set the bass and treble controls to zero.
The playback level is set by the colume control so that the VTVM reads 1 volt when playing back a 400 c/s signal. Specifications as under para. 5.7.17.

5.7.19 Speed test

Insert a 144 cm (450″) marked tape section, and run it through the tape recorder with the operating lever in normal forward drive. The time for the tape section to pass by the record head should be:

7½ i.p.s: 1 min.
3¾ i.p.s.: 2 min.
$1^7/_8$ i.p.s.: 4 min.

The speed tolerance should be ±2 % at all speeds.

www.hifiengine.com

5.8 ELECTRICAL MODIFICATIONS INTRODUCED TO THE MODEL 12 TAPE RECORDER

PART	ORIGINAL PART	NEW PART	MODIFIED ABOVE SERIAL NO.
R146–12C	3 Kohms ½ W 10 %	1.5 Kohms ½ W 10 %	742326
R147–12C	3 Kohms ½ W 10 %	1.5 Kohms ½ W 10 %	742326
R151–12C	100 Kohms ½ W 10 %	43 Kohms ½ W 10 %	743026
R152–12C	100 Kohms ½ W 10 %	43 Kohms ½ W 10 %	743026
R200–12C	100 ohms ¼ W 5 %	150 ohms ¼ W 5 %	733228
R201–12C	33 Kohms ½ W 10 %	68 Kohms ½ W 10 %	744500
R202–12C	100 ohms ¼ W 5 %	150 ohms ¼ W 5 %	733228
R203–12C	33 Kohms ½ W 10 %	68 Kohms ½ W 10 %	744500
R302–12C	150 ohms ½ W 10 %	82 ohms ½ W 10 %	749500
R315–12C	10 Kohms ½ W 10 %	7.5 Kohms ½ W 10 %	749500
R318–12C		.47 ohm wirewoud 3 W	733051
R319–12C		.47 ohm wirewoud 3 W	733051
R320–12C		100 ohms ½ W 10 %	734001
R402–12C	150 ohms ½ W 10 %	82 ohms ½ W 10 %	749500
R415–12C	10 Kohms ½ W 10 %	7.5 Kohms ½ W 10 %	749500
R418–12C		.47 ohm wirewoud 3 W	733051
R419–12C		.47 ohm wirewoud 3 W	733051
R420–12C		100 ohms ½ W 10 %	734001
R505–12C	47 ohms ½ W 10 %	1 Kohm ½ W 10 %	739500
R507–12C	100 ohms ½ W 10 %	510 ohms ½ W 10 %	739500
C181–12C		40 μF 2.5 V	734501
C182–12C		25 μF 15–18 V	733051
C184–12C		40 μF 2.5 V	734501
C185–12C		25 μF 15–18 V	733051
C304–12C	.1 μF 250 V 20 %	2.5 μF 64 V – 10/100 %	749500
C404–12C	.1 μF 250 V 20 %	2.5 μF 64 V – 10/100 %	749500
C504–12C		.1 μF 250 V 20 %	748700
C505–12C		.1 μF 250 V 20 %	748700
Q105	BC114	BC109B	745500
Q116	BC114	BC109B	745500
Q502	BC113	U2848/2 (U2848/1)	739500
Modifications introduced to the four-track version			
Rec./playback head	38H	40H	733228
Erase head	37H	41H	733228

www.hifiengine.com

5.9 MODIFICATIONS FROM FOUR-TRACK TO TWO-TRACK MODELS

The following changes have to be introduced when the tape recorders are modified from four-track to two-track.

PART	MODELS 12—4	MODELS 12—2
Erase head	41H	43H
Rec./playb. head	40H	39H
Osc. transformer	T3	T1
C117	300 pF	1000 pF
C120	50—250 pF	150—750 pF
C14		12 pF
C15		12 pF
R148	330 ohms	100 ohms
R149	130 ohms	100 ohms
R150	130 ohms	100 ohms

5.10 MODIFICATION FROM 220 VOLTS 50 c/s TO 110 VOLTS 60 c/s

When changing from 50 to 60 c/s operation, the diameter of the motor pulley is reduced to compensate for the increased mains frequency. The motor capacitor C1 is also changed from 1.2 uF to 1.1 uF.
The transformer TR286 is a tapped transformer which can be connected for either 220 volts or 110 volts 50/60 c/s.

Ref. para 4.4 instruction for changing the motor pulley. The type number for the 50 c/s motor pulley is 62.1—5716—12C and for the 60 c/s version it is 62.2—5714—12C.
The motor capacitor consists of two capacitors 1.1 uF and .1 uF in the same can. When modifying the tape recorder from 60 c/s to 50 c/s, the capacitor is increased from 1.1 uF to 1.2 uF by connecting a wire between the solidering tags on the can according to specifications printed on the capacitor. The opposite modification is obtained by cutting this same wire to decrease the capacitance.
The transformer is connected to either 220 volts or 110 volts according to the following schematic on fig. 56.

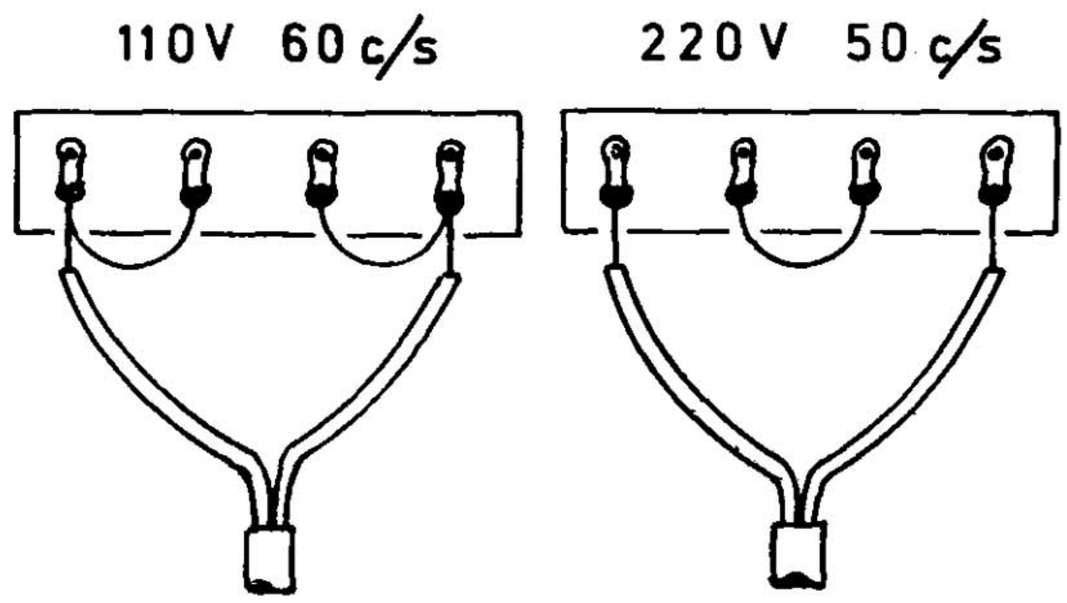

Fig. 56. Transformer connections for 220 V 50 c/s and 110 V 60 c/s.

6.0 Parts list

To improve the equipment, minor changes and modifications have been introduced on the models. The complete reference number of the part and serial number of the tape recorder must therefore be specified where spare parts are ordered, i.e.:

18.19 — 1 — 12C — * — Rectifier circuit board with components.
1 2 3 4

1) The three or four first numbers state the part and are referred to in all figures.
2) This digit is presented only when modification is introduced to the part. In some cases this number also refers to subcontractors specifications.
3) The type number state the type of tape recorder for which the part is used.
   12C — The part is interchangeable and used for all models.
   122 — Parts only for model 12—2.
   124 — Parts only for model 12—4.
   1221 — Parts only for model 12—21.
   1241 — Parts only for model 12—41.
   1222 — Parts only for model 12—22.
   1224 — Parts only for model 12—24.
4) Modified parts indicated with * may be used as replacement for parts of earlier design.

6.0.1 Mechanical parts

Ref. No.	Description	Fig. ref.	Notes
11.1-286-12C	Power transformer 110—220 V, 50/60 c/s T2	53	
11.2-12C	Mains terminal strip		
11.3-12C	Bracket for transformer	53	
13.1-122	Oscillator transformer T1 (2-track)		
13.1-124	Oscillator transformer T3 (4-track)		
14.1-12C	Motor 165V 50/60 c/s Engel	31, 53	
14.1-1-12C	Motor 165 V 50/60 c/s Engel	31, 53	Introduced from ser. No 746951
14.2-12C	Mounting plate for motor, complete	53	Removed from ser. No. 746951
14.3-12C	Bridge for mounting of motor	53	
14.3-1-12C	Bridge for mounting of motor	53	Introduced from ser. No 746951
14.4-12C	Shock absorber for motor	53	
14.5-1-12C	Plate shim 2,3 mm		Introduced from ser. No 746951

www.hifiengine.com

Ref. No.	Description	Fig. ref.	Notes
14.5-2-12C	Plate shim .7 mm		Introduced from ser. No 746951
14.6-12C	Bracket, motorcapacitor		
18.1-122	Pre-amplifier board with components (2-track)	53, 54	
18.1-124	Pre-amplifier board with components (4-track)	53, 54	
18.2-12C	Shield for pre-amplifier board	53	
18.3-12C	Guide for pre-amplifier board	9, 54	
18.4-12C	Frame for pre-amplifier board	53, 54	
18.5-12C	Bracket for frame for pre-amplifier board	53	
18.6-12C	Bar for pre-amplifier board	54	
18.7-12C	Record-playback switch ch. 1		
18.8-12C	Record-playback switch ch. 2		
18.9-12C	Equalization switch		
18.11-12C	Output amplifier board with components	53	
18.12-12C	Clamp for output amplifiers	53	
18.13-12C	Heat sink for output transistors		
18.14-12C	Heat sink for transistor	53	
18.15-12C	Rubber spacer for output amplifier		
18.16-12C	Input circuit board with components		
18.17-12C	FM-MX switch		
18.18-12C	Shield for input circuit		
18.19-12C	Rectifier circuit board with components	53	
18.19-1-12C	Rectifier circuit board with components	53	Introduced from ser. No. 743026
18.21-12C	Frame for rectifier circuit board	53	
18.22-12C	Contact, rectifier circuit board		Introduced from ser. No. 743026
18.23-12C	Switch guide w/contacts CH1		
18.24-12C	Switch guide w/contacts CH2		
18.25-12C	Switch guide w/contacts, equalization switch		
19.1-12C	Erase head circuit board with components	11	
19.2-12C	Record/playback head-circuit board with components	11, 35	
19.3-12C	Terminal plate with phono jacks CH1: green/green		
19.4-12C	Terminal plate with phono jacks colour: red/blue	53	
19.5-12C	Terminal strip for click-filter	53	
19.6-12C	Terminal plate with phono jacks CH2: yellow/yellow		
31.1-12C	Electronic beam indicator board, without tubes	53	
31.2-12C	Bracket for indicator board	53	
31.3-12C	Tube socket for EAM86		
31.4-12C	Spring for indicator tubes	6, 53	
31.4-1-12C	Spring for indicator tubes	6, 53	
31.5-12C	Rubber tube for indicator board		Introduced from ser. No. 743501
32.1-12C	Volume control knob, upper	38	
32.2-12C	Volume control knob, lower	38	
32.3-12C	Knob for BASS and TREBLE control	38	
33.1-12C	Switch, ON-OFF	6, 9	
33.2-12C	Microswitch Rx1	7, 9	
33.3-12C	Plate spring, microswitch		
33.4-12C	Momentary stop kit, complete	35	
33.5-12C	Actuator lever, delrin	7	
33.6-12C	Slip-on knob for 33.1		
33.7-12C	Insulation shield for 33.1	53	
33.8-12C	Clamp for microswitch		
39.1-12C	Knob for speaker selector	38	
39.2-12C	Knob for function selector	38	
39.3-12C	Function selector lever ch. 2	54	

www.hifiengine.com

Ref. No.	Description	Fig. ref.	Notes
39.4-12C	Function selector lever ch. 1		
39.5-12C	Index arm		
39.6-12C	Interlock arm	11	
39.7-12C	Arm for function selector switch		
39.8-12C	Brass bearing for function selectors		
39.9-12C	Spring for interlock arm	11	
39.11-12C	Bracket for function selector arms	53, 54	
39.12-12C	Spring for index arm	11	
39.13-12C	Sleeve bearing for function selectors		
39.16-12C	Shield for speaker selector		
39.17-12C	Speaker selector switch		
39.18-12C	Arresting arm for equalization switch	53	
39.19-12C	Spring for arresting arm	53	
39.21-12C	Arm for equalization switch	53	
39.21-1-12C	Arm for equalization switch	53	Introduced from ser. No. 746951
39.22-12C	Clip for arm for equalization switch, front	53	
39.23-12C	Clip for arm for equalization switch, rear	53	
39.24-12C	Cam washer for arm for equalization switch	53	
44.1-12C	Pilot lamp		
44.2-12C	Socket for pilot lamp	9	
44.3-12C	Shield for pilot lamp		
45.1-1-12C	Microphone contact (DIN)	6, 9	
45.1-2-12C	Microphone jack for 115 V version only		
45.2-12C	Input contact for CR. PHONO and RADIO (DIN)		
45.3-12C	External speaker output jack		
45.4-12C	External speaker output contact (DIN)	53	
45.5-12C	Shield for microphone input circuit	54	
45.6-12C	Bracket for output terminals	53	
45.7-12C	Washer for microphone jack — 115 V version only		
48.1-1221	Wooden cabinet		
48.1-1241	Wooden cabinet		
48.2-12C	Buffer, polyethylene		
48.3-1-1221	Designation plate 220 v/50 c/s		
48.3-2-1222	Designation plate 220 v/50 c/s		
48.3-3-1241	Designation plate 220 v/50 c/s		
48.3-4-1242	Designation plate 220 v/50 c/s		
48.3-5-1221	Designation plate 115 v/60 c/s		
48.3-6-1222	Designation plate 115 v/60 c/s		
48.3-7-1241	Designation plate 115 v/60 c/s		
48.3-8-1242	Designation plate 115 v/60 c/s		
48.4-12C	Designation plate for input terminals		
48.5-12C	Designation plate for output terminals		
48.6-1222	Luggage type carrying case		
48.6-1242	Luggage type carrying case		
51.1-12C	Pressure wheel	10, 11	
51.2-12C	Shaft for pressure wheel	10, 11, 35	
51.3-12C	Pressure wheel bracket, complete assembly	10, 11	
51.4-12C	Spring for pressure wheel	10, 35	
51.5-12C	Lever for pressure wheel	11,35	
51.6-12C	Roller for pressure wheel bracket	9	
51.7-12C	Spring for pressure wheel bracket	9, 10	
51.8-12C	Shaft for pressure wheel lever	35	
51.9-12C	Tape brake assembly, complete	11, 35	
51.11-12C	Equalization latch	11, 35	
51.13-12C	Brake block for tape brake	11	
52.1-12C	Trip bar	12, 21, 22, 23, 24, 25, 26 27, 28, 29, 30	

www.hifiengine.com

Ref. No.	Description	Fig. ref.	Notes
53.1-12C	Speed transfer wheel	12, 31, 34	
53.2-12C	Transfer wheel holder	12, 34	
53.3-12C	Mounting arm for transfer wheel	12, 34	
53.4-12C	Knob for speed selector	38	
53.5-12C	Spring for transfer wheel holder	12, 34	
53.7-12C	Parallel arm	12, 34	
54.1-12C	Operating lever, complete assembly	7, 53, 54	
54.2-12C	Knob for operating lever	38	
54.7-12C	Operating lever shaft with delrin ball	7	
54.8-12C	Clips for operating lever	7	
59.1-12C	Spring with felt for pressure pad	11, 35	
59.2-12C	Pressure pad arm	11, 35	
59.3-12C	Index lever	12, 21, 23, 25, 27, 29	
59.4-12C	Shaft for index lever	12, 21, 23, 25, 27, 29	
59.5-12C	Spring for index lever	21, 23, 25, 27, 29	
59.6-12C	Clutch lever for supply turntable	12, 13, 14, 21, 23, 25, 27, 29	
59.7-12C	Upper clutch lever for take-up turntable	12, 16, 17, 22, 24, 26, 28, 30	
59.8-12C	Lower clutch lever for take-up turntable	16, 17, 22, 24, 26, 28, 30	
59.9-12C	Spring for 59.6 and 59.7	21, 22, 23, 24, 25, 26, 27, 28, 29, 30	
59.11-12C	Cam disc	34	
59.12-12C	Cam disc arm, complete	6, 34	
59.13-12C	Extension spring for cam disc arm	12, 34,	
59.14-12C	Spring for pressure pad arm	35	
59.15-12C	Spring for 59.8	22, 24, 26, 28, 30	
59.16-12C	Spring for linkage arm	6, 12	
59.17-12C	Eccentric segment	9	
59.18-12C	Transfer wheel lifting arm, complete	6, 12, 34	
59.19-12C	Delrin button for clutch lever	12, 21, 22, 23, 24, 25, 26, 27, 28, 29, 30	
59.23-12C	Shaft for clutch levers	12, 21, 22, 23, 24, 25, 26, 27, 28, 29, 30	
59.24-12C	Transfer bracket	11, 35	
59.25-12C	Bracket for cam disc arm shaft	34	
59.26-12C	Shaft for cam disc arm		
61.1-12C	Take-up pulley disc (right)	6, 16, 17, 22, 24, 26, 28, 30, 31	
61.2-12C	Supply pulley disc (left)	13, 14, 15, 21, 23, 25, 27, 29, 31	
61.3-12C	Mylar sheet for take-up pulley disc	16	
61.4-12C	Mylar sheet for supply pulley disc	13, 15	
61.6-12C	Tape tight disc	13, 21	
61.7-12C	Helical compression spring for supply turntable (left)	13, 23, 25, 27, 29	
61.8-12C	Helical compression spring for take-up pulley (right)	16, 22, 24, 26, 28, 30	
61.9-12C	Spring for tape tight disc	13, 15	
62.1-5716-12C	Motor pulley 50 c/s	6, 31, 34	
62.1-5714-12C	Motor pulley 60 c/s	6, 31, 34	
62.2-12C	Rubber drive belt	6	
65.1-12C	Take-up turntable, right	6, 16, 22, 24, 26, 28, 30, 31	
65.2-12C	Supply turntable, left	6, 13, 21, 23, 25, 27, 29, 31	
65.5-12C	Delrin nut	13	
65.6-12C	Tape reel holder		Introduced from ser. No. 748701
66.1-1-12C	Flywheel, complete	31 32, 34	
66.3-12C	Bushing for flywheel bearing	9, 32	
66.4-12C	Spring for upper flywheel bearing	32	
66.5-12C	Spring for lower flywheel bearing	32	
66.6-12C	Brake spring with felt pad for flywheel	12	
66.7-12C	Latch for flywheel bearing, threaded	9, 32	
66.8-12C	Latch for flywheel bearing, not threaded	12, 32	Introduced from ser. No. 748701
66.9-12C	Trust spring with delrin knob		Introduced from ser. No. 739301

www.hifiengine.com

Ref. No.	Description	Fig. ref.	Notes
66.11-12C	Feltring, flywheel	32	Introduced from ser. No. 739301
66.12-12C	Bushing, flywheel	32	Introduced from ser. No. 739301
66.13-12C	Springlock, flywheel	32	
66.14-12C	Felt, flywheel (adhesive)	32	
66.14-1-12C	Felt, flywheel (adhesive)	32	Introduced from ser. No. 739301
66.71-12C	Felt ring for flywheel bearing	32	
66.81-12C	Thrust washer	32	
69.1-12C	Pulley for revolution counter (turntable)	16	
69.2-12C	Pulley for revolution counter (counter)	53	
69.3-12C	Rubber drive belt for counter	53	
72.1-12C	Flange for bearing house, right		
72.2-12C	Flange for bearing house, left	13, 15, 16	
73.1-12C	Front head cover	38	
73.2-12C	Rear head cover	38	
73.3-12C	Screw head cover	38	
73.4-12C	Bracket for rear headcover, left	38	
73.5-12C	Bracket for rear headcover, right	38	
73.6-12C	Bracket for front headcover	11	
73.6-1-12C	Bracket for front headcover		Introduced from ser. No. 746951
74.1-1-122	Top cover		
74.1-2-122	Top cover with interlock (115 V — 60 c/s)		
74.1-3-124	Top cover		
74.1-4-124	Top cover with interlock (115 V — 60 c/s)		
74.2-12C	Mounting screw (4 x 24 mm)	6	
74.3-12C	Rubber mounting, front	6	Removed from ser. No. 746951
74.4-12C	Washer for mounting screw		
74.5-12C	Rubber washer	38	
74.6-12C	Lower rubber mounting, rear		
74.7-12C	Upper rubber mounting, rear		
79.1-12C	Window for counter		
79.2-12C	Window for indicators		
79.3-12C	Speed selector bracket	6, 34	
79.4-12C	Spring for speed selector	34	
79.5-12C	Mounting bracket for stabilizing transistor		
79.9-12C	Cover plate 1 (with tape)	6	
79.11-12C	Cover plate 2 (with felt)	6	
79.13-12C	Tape guide, left	11	
79.14-12C	Tape guide, right	6, 11	
79.15-12C	Tape guide, adjustable	11, 35	
79.17-12C	Actuating spring for end stop	6, 11	
79.18-12C	Felt washer for cover plate		
79.21-12C	Clips for C3	53	
79.22-12C	Clips for C4	53	
79.23-12C	Revolution counter	9	
79.24-12C	Bracket for revolution counter		
79.25-12C	Bracket for end stop spring	9	
79.28-12C	Stereo emblem		
79.29-12C	Tandberg emblem		
79.31-12C	Adjustable tape guide, right	11, 35	
79.32-12C	Spring for adjustable tape guide, right		
79.33-12C	Wirebracket for microswitch	9	Removed from ser. No. 746950
79.34.12C	Feltring, knobs	38	Introduced from ser. No. 745001
79.35-12	Clamp for mains cord		

www.hifiengine.com

Screws, washers, and lock washers

M101	Screw 3 × 4 mm c.h.
M102	Screw 3 × 4,5 mm c.h.
M104	Screw 3 × 6 mm c.h.
M107	Screw 3 × 8 mm c.h.
M112	Screw 4 × 6 mm c.h.
M113	Screw 4 × 8 mm c.h.
M114	Screw 4 × 10 mm c.h.
M116	Parker screw 1/4" No. 4
M120	Screw 2,6 × 4 mm c.h.
M121	Screw 2,3 × 12 mm c.h.
M122	Screw 4 × 22 mm c.h.
M125	Screw 3 × 6 mm c.h. 1.5 mm head
M130	Screw 3 × 8 mm l.h.
M132	Umbraco screw 1/8" × 3.5 mm
M301	Turbax washer 7,5 × 4,2 × 0,2 mm
M302	Turbax washer 7,5 × 4,2 × 0,3 mm
M303	Turbax washer 7,5 × 4,2 × 0,5 mm
M307	Turbax washer 11 × 6,5 × 0,5 mm
M313	Lock ring 2,5 mm
M314	Lock ring 3 mm
M315	Lock ring 3,5 mm
M317	Lock ring 5 mm
M318	Lock ring 6 mm
M321	Lock ring 4 × 0,6 mm
M325	Washer 16 × 4,2 × 1,65 mm
M329	Lock ring 2,3 mm
M331	Bakelite washer 18 × 10 × 0,5 mm
M333	Spring washer 1/8"
M348	Teflon washer 6,5 × 4,2 × 0,2 mm
M349	Lock washer 4 mm
M355	Teflon washer 6,5 × 4,2 × 0,5 mm
M403	Rivet 3,5 mm

6.0.2 Electrical parts

Transistors

Q1-12C	Transistor	TI3030
Q101-12C	»	BC109B
Q102-12C	»	BC114 (U3962)
Q103-12C	»	BC113 (SE4001)
Q104-12C	»	BC109B
Q105-12C	»	BC109B
Q106-12C	»	BC109B
Q107-12C	»	BC109B
Q108-12C	»	BC113 (SE4001)
Q109-12C	»	BC107B
Q110-12C	»	U2848/2 (U2848/1)
Q111-12C	»	U2848/2 (U2848/1)
Q112-12C	»	BC109B
Q113-12C	»	BC114 (U3962)
Q114-12C	»	BC113 (SE4001)
Q115-12C	»	BC109B
Q116-12C	»	BC109B
Q117-12C	»	BC109B
Q118-12C	»	BC109B
Q119-12C	»	BC113 (SE4001)
Q120-12C	»	BC107B
Q301-12C	»	BC113 (SE4001)
Q302-12C	»	SE6002
Q303/Q304-12C	»	AC127/AC128 (AC127/AC152)
Q305/Q306-12C	»	2-AD150
Q401-12C	»	BC113 (SE4001)
Q402-12C	»	SE6002
Q403/Q404-12C	»	AC127/AC128 (AC127/AC152)
Q405/Q406-12C	»	2-AD150
Q501-12C	»	U2848/2 (U2848/1)
Q502-12C	»	U2848/2 (U2848/1)

Potentiometers

R1/R2-12C	Potentiometer	2 × 10 kohm log
R3/R6-12C	»	2 × 50 kohm lin
R4/R5-12C	»	2 × 50 kohm lin
R14-12C	»	22 kohm lin
R15-12C	»	22 kohm lin
R20-12C	»	100 kohm lin
R305-12C	»	250 kohm lin
R310-12C	»	200 ohm lin
R405-12C	»	250 kohm lin
R410-12C	»	200 ohm lin
R601-12C	»	250 kohm lin
R605-12C	»	250 kohm lin

Coils

L1-12C	Coil	L1
L2-12C	»	L2
L3-12C	»	L3
L4-12C	»	L4 19 kc/s filter
L5-12C	»	L5 19 kc/s filter

Heads

34H-122	Erase head (below serial No. 746650)
37H-124	Erase head (below serial No. 733200)
38H-124	Record/playback head (below serial No. 733200)
39H-122	Record/playback head
40H-124	Record/playback head (above serial No. 733201)
41H-124	Erase head (above serial No. 733201)
43H-122	Erase head (above serial No. 746651)

Diodes

D501-12C	1N971B Zener (BZX25 - ZF27)
D601-12C	IS920
D602-12C	IS920

Rectifiers

Y416 (below serial No. 742026)
B40C3200 (above serial No. 742027)
B250C75 kp

Fuses

S501-12C	2A 5 × 30 mm slow
S502-12C	0,2A 5 × 30 mm slow
S503-12C	2A 5 × 20 mm with wires

Tubes

V1-12C	EAM86
V2-12C	EAM86

Speakers

HT111 — 3 ohm

www.hifiengine.com

Resistors:

Ref. No.	Description			Notes
R7-12C	51 ohm	1/2 W	10 %	
R8-12C	22 Kohm	1/2 W	10 %	
R9-12C	22 Kohm	1/2 W	10 %	
R10-12C	100 Kohm	1/2 W	10 %	
R11-12C	100 Kohm	1/2 W	10 %	
R12-12C	1 Mohm	1/2 W	10 %	
R13-12C	1 Mohm	1/2 W	10 %	
R16-12C	3,9 ohm, 5 W Wire Wound		10 %	
R17-12C	3,9 ohm, 5 W Wire Wound		10 %	
R101-12C	220 Kohm	1/4 W[1])	5 %	
R102-12C	2,2 Kohm	1/4 W[1])	5 %	
R103-12C	100 Kohm	1/4 W[1])	5 %	
R104-12C	39 Kohm	1/4 W[1])	5 %	
R105-12C	47 ohm	1/4 W[1])	5 %	
R106-12C	27 Kohm	1/4 W[1])	5 %	
R107-12C	27 Kohm	1/4 W[1])	5 %	
R108-12C	27 Kohm	1/4 W[1])	5 %	
R109-12C	1 Mohm	1/4 W[1])	5 %	
R110-12C	68 Kohm	1/4 W[1])	5 %	
R111-12C	10 Kohm	1/4 W[1])	5 %	
R112-12C	560 ohm	1/4 W[1])	5 %	
R113-12C	1,5 Kohm	1/2 W	10 %	
R114-12C	470 Kohm	1/4 W[1])	5 %	
R115-12C	1,5 Kohm	1/2 W	10 %	
R116-12C	68 Kohm	1/4 W[1])	5 %	
R117-12C	5,1 Kohm	1/4 W[1])	5 %	
R118-12C	220 Kohm	1/4 W[1])	5 %	
R119-12C	2,7 Kohm	1/4 W[1])	5 %	
R120-12C	2,2 Kohm	1/2 W	10 %	
R121-12C	3,9 Kohm	1/2 W	10 %	
R122-12C	820 ohm	1/2 W	10 %	
R123-12C	5,1 Mohm	1/2 W	10 %	
R124-12C	68 Kohm	1/2 W	10 %	
R125-12C	620 ohm	1/2 W	10 %	
R126-12C	1,2 Kohm	1/4 W[1])	5 %	
R127-12C	100 ohm	1/2 W	10 %	
R128-12C	10 Kohm	1/2 W	10 %	
R129-12C	1 Kohm	1/2 W	10 %	
R130-12C	4,7 Kohm	1/2 W	10 %	
R131-12C	120 ohm	1/2 W	10 %	
R132-12C	33 ohm	1/2 W	10 %	
R133-12C	68 Kohm	1/2 W	10 %	
R134-12C	33 ohm	1/2 W	10 %	
R135-12C	1,5 Kohm	1/2 W	5 %	
R136-12C	33 ohm	1/2 W	10 %	
R137-12C	910 ohm	1/2 W	5 %	
R138-12C	33 ohm	1/2 W	10 %	
R139-12C	510 ohm	1/2 W	5 %	
R140-12C	43 Kohm	1/2 W	10 %	
R141-12C	220 Kohm	1/2 W	10 %	
R142-12C	10 Kohm	1/2 W	10 %	
R143-12C	130 ohm	1/3 W[1])	5 %	
R144-12C	1 Kohm	1/2 W	10 %	
R145-12C	5,1 Kohm	1/2 W	10 %	
R146-12C	1,5 Kohm	1/2 W	10 %	Changed from serial No. 742326
R147-12C	1 Kohm	1/2 W	10 %	Changed from serial No. 742326
R148-124	330 ohm	1/2 W	10 %	Changed from serial No. 738926
R148-122	100 ohm	1/2 W	10 %	Changed from serial No. 739900

[1]) Low-noise resistor.

www.hifiengine.com

Ref. No.	Description			Notes
R149-124	130 ohm	1/2 W	10 %	
R149-122	100 ohm	1/2 W	10 %	
R150-124	130 ohm	1/2 W	10 %	
R151-12C	43 Kohm	1/2 W	10 %	Changed from serial No. 743026
R152-12C	43 Kohm	1/2 W	10 %	Changed from serial No. 743026
R153-12C	2,2 Kohm	1/4 W[1])	5 %	
R154-12C	100 Kohm	1/4 W[1])	5 %	
R155-12C	220 Mohm	1/4 W[1])	5 %	
R156-12C	39 Kohm	1/4 W[1])	5 %	
R157-12C	47 ohm	1/4 W[1])	5 %	
R158-12C	27 Kohm	1/4 W[1])	5 %	
R159-12C	27 Kohm	1/4 W[1])	5 %	
R160-12C	27 Kohm	1/4 W[1])	5 %	
R161-12C	1 Mohm	1/4 W[1])	5 %	
R162-12C	68 Kohm	1/4 W[1])	5 %	
R163-12C	10 Kohm	1/4 W[1])	5 %	
R164-12C	560 ohm	1/4 W[1])	5 %	
R165-12C	1,5 Kohm	1/2 W	10 %	
R166-12C	470 ohm	1/4 W[1])	5 %	
R167-12C	1,5 Kohm	1/2 W	10 %	
R168-12C	68 Kohm	1/4 W[1])	5 %	
R169-12C	220 Kohm	1/4 W[1])	5 %	
R170-12C	5,1 Kohm	1/4 W[1])	5 %	
R171-12C	2,7 Kohm	1/4 W[1])	5 %	
R172-12C	2,2 Kohm	1/2 W	10 %	
R173-12C	3,9 Kohm	1/2 W	10 %	
R174-12C	820 ohm	1/2 W	10 %	
R175-12C	5,1 Mohm	1/2 W	10 %	
R176-12C	68 Kohm	1/2 W	10 %	
R177-12C	620 ohm	1/2 W	10 %	
R178-12C	1,2 Kohm	1/4 W[1])	5 %	
R179-12C	100 ohm	1/2 W	10 %	
R180-12C	10 Kohm	1/2 W	10 %	
R181-12C	1 Kohm	1/2 W	10 %	
R182-12C	4,7 Kohm	1/2 W	10 %	
R183-12C	120 ohm	1/2 W	10 %	
R184-12C	68 ohm	1/2 W	10 %	
R185-12C	33 ohm	1/2 W	10 %	
R186-12C	1,5 Kohm	1/2 W	5 %	
R187-12C	33 ohm	1/2 W	10 %	
R188-12C	910 ohm	1/2 W	5 %	
R189-12C	33 Kohm	1/2 W	10 %	
R190-12C	510 ohm	1/2 W	5 %	
R191-12C	43 Kohm	1/2 W	10 %	
R192-12C	220 Kohm	1/2 W	10 %	
R193-12C	10 Kohm	1/2 W	10 %	
R194-12C	130 ohm	1/3 W[1])	5 %	
R195-12C	1 Kohm	1/2 W	10 %	
R196-12C	5,1 Kohm	1/2 W	10 %	
R197-12C	3 Kohm	1/2 W	10 %	
R198-12C	1 Kohm	1/2 W	10 %	
R199-12C	33 ohm	1/2 W	10 %	
R200-12C	150 ohm	1/4 W[1])	5 %	Changed from serial No. 733228
R201-12C	68 Kohm	1/2 W	10 %	Changed from serial No. 744500
R202-12C	150 ohm	1/4 W[1])	5 %	
R203-12C	68 Kohm	1/2 W	10 %	Changed from serial No. 744500
R204-12C	5,1 Kohm	1/2 W	10 %	
R205-12C	5,1 Kohm	1/2 W	10 %	
R206-12C	100 Kohm	1/2 W	10 %	
R207-12C	100 Kohm	1/2 W	10 %	
R208-12C	10 Kohm	1/2 W	10 %	

[1]) Low-noise resistor.

www.hifiengine.com

Ref. No.	Description			Notes
R209-12C	10 Kohm	1/2 W	10 %	
R210-12C	82 ohm	1/2 W	10 %	
R211-12C	82 ohm	1/2 W	10 %	
R301-12C	10 Kohm	1/2 W	10 %	
R302-12C	82 ohm	1/2 W	10 %	Changed from serial No. 749500
R303-12C	330 Kohm	1/2 W	10 %	
R304-12C	10 Kohm	1/2 W	10 %	
R306-12C	22 Kohm	1/2 W	10 %	
R307-12C	100 ohm	1/2 W	10 %	
R308-12C	1 Kohm	1/3 W[1])	5 %	
R309-12C	2 Kohm	1/2 W	10 %	
R311-12C	130 ohm NTC		20 %	
R312-12C	51 ohm	1/2 W	10 %	
R313-12C	51 ohm	1/2 W	10 %	
R314-12C	200 ohm	1/2 W	10 %	
R315-12C	7,5 Kohm	1/2 W	10 %	Changed from serial No. 749500
R316-12C	1 Kohm	1/2 W	10 %	
R317-12C	82 ohm	1/2 W	10 %	
R318-12C	,47 ohm	3 W Wirewound	10 %	Introduced from serial No. 733051
R319-12C	,47 ohm	3 W Wirewound	10 %	Introduced from serial No. 733051
R320-12C	100 ohm	1/2 W	10 %	Introduced from serial No. 734001
R401-12C	10 Kohm	1/2 W	10 %	
R402-12C	82 ohm	1/2 W	10 %	Changed from serial No. 749500
R403-12C	330 Kohm	1/2 W	10 %	
R404-12C	10 Kohm	1/2 W	10 %	
R406-12C	22 Kohm	1/2 W	10 %	
R407-12C	100 ohm	1/2 W	10 %	
R408-12C	1 Kohm	1/3 W[1])	5 %	
R409-12C	2 Kohm	1/2 W	10 %	
R411-12C	130 ohm NTC		20 %	
R412-12C	51 ohm	1/2 W	10 %	
R413-12C	51 ohm	1/2 W	10 %	
R414-12C	200 ohm	1/2 W	10 %	
R415-12C	7,5 Kohm	1/2 W	10 %	Changed from serial No. 749500
R416-12C	1 Kohm	1/2 W	10 %	
R417-12C	82 ohm	1/2 W	10 %	
R418-12C	,47 ohm	3 W Wirewound	10 %	Introduced from serial No. 733051
R419-12C	,47 ohm	3 W Wirewound	10 %	Introduced from serial No. 733051
R420-12C	100 ohm	1/2 W	10 %	Introduced from serial No. 734001
R501-12C	820 ohm	2 W	10 %	
R502-12C	130 ohm NTC		20 %	
R503-12C	510 Kohm	1/2 W	10 %	
R504-12C	3,9 Kohm	1 W	10 %	
R505-12C	1 Kohm	1/2 W	10 %	Changed from serial No. 739500
R506-12C	5,1 Kohm	1/2 W	10 %	
R507-12C	510 ohm	1/2 W	10 %	Changed from serial No. 739500
R508-12C	300 Kohm	1/2 W	10 %	
R602-12C	100 Kohm	1/2 W	10 %	
R603-12C	150 Kohm	1 W	10 %	
R604-12C	10 Mohm	1/2 W	10 %	
R606-12C	100 Kohm	1/2 W	10 %	
R607-12C	150 Kohm	1 W	10 %	
R608-12C	10 Mohm	1/2 W	10 %	

[1]) Low-noise resistor.

www.hifiengine.com

Capacitors:

Ref. No.	Description			Type	Notes
C1-12C	1,1 µF 5 %/0,1 µF 10 %, 380 V			Oil paper	50 c/s operation
C1-12C	1,1 µF	380 V	5 %	Oil paper	60 c/s operation
C2-12C	,1 µF	400 V	20 %	Oil paper	
C3-12C	2500 µF	64 V		Electrolytic	
C4-12C	1250 µ	40 V		Electrolytic	
C5-12C	820 pF	160 V	2,5 %	Styroflex	19 kc/s filter
C5-12C	250 pF	125 V	2,5 %	Styroflex	33,3 kc/s filter
C6-12C	820 pF	160 V	2,5 %	Styroflex	19 kc/s filter
C6-12C	250 pF	125 V	2,5 %	Styroflex	33,3 kc/s filter
C10-12C	10—60 pF Trimming capacitor			Ceramic	
C11-12C	10—60 pF Trimming capacitor			Ceramic	
C12-12C	2000 pF	400 V	20 %	Metalized paper	
C13-12C	2000 pF	400 V	20 %	Metalized paper	
C101-12C	25 µF	25 V		Electrolytic	
C102-12C	25 µF	25 V		Electrolytic	
C103-12C	100 µF	10 V		Electrolytic	
C104-12C	300 pF	400 V	20 %	Ceramic	
C106-12C	2,5 µF	64 V	—10/100 %	Electrolytic	
C107-12C	3300 pF	500 V	20 %	Metalized paper	
C108-12C	2,5 µF	64 V	—10/100 %	Electrolytic	
C109-12C	80 µF	25 V		Electrolytic	
C110-12C	25 µF	25 V		Electrolytic	
C111-12C	5 µF	20 V		Tantalum	
C112-12C	560 pF	125 V	20 %	Styroflex	
C113-12C	1000 pF	160 V	2,5 %	Styroflex	
C114-12C	3300 pF	500 V	20 %	Metalized paper	
C115-12C	2,5 µF	64 V	—10/100 %	Electrolytic	
C116-12C	80 µF	25 V		Electrolytic	
C117-124	300 pF	125 V		Styroflex	
C117-122	1000 pF	125 V		Styroflex	
C118-12C	,1 µF	250 V	20 %	Polyester	
C119-12C	,1 µF	250 V	20 %	Polyester	
C120-124	20—250 pF Trimming capacitor			Ceramic	
C120-122	150—750 pF Trimming Capacitor			Ceramic	
C121-12C	80 µF	25 V		Electrolytic	
C122-12C	,022 µF	100 V	10 %	Polyester	
C123-12C	,15 µF	100 V	5 %	Polyester	
C124-12C	,047 µF	100 V	5 %	Polyester	
C125-12C	,015 µF	100 V	2,5 %	Polyester	
C126-12C	,01 µF	250 V	20 %	Metalized paper	
C127-12C	,1 µF	250 V	20 %	Polyester	
C128-12C	,15 µF	100 V	5 %	Polyester	
C129-12C	2,5 µF	64 V	—10/100 %	Electrolytic	
C130-12C	2,5 µF	64 V	—10/100 %	Electrolytic	
C131-12C	500 pF	600 V	20 %	Metalized paper	
C132-12C	,1 µF	250 V	20 %	Polyester	
C133-12C	80 µF	25 V		Electrolytic	
C134-12C	2,5 µF	64 V	—10/100 %	Electrolytic	
C135-12C	,01 µF	250 V	20 %	Metalized paper	
C141-12C	5000 pF	125 V	10 %	Styroflex	
C142-12C	5000 pF	125 V	10 %	Styroflex	
C143-12C	1000 pF	160 V	10 %	Styroflex	
C144-12C	1000 pF	160 V	10 %	Styroflex	
C145-12C	25 µF	25 V		Electrolytic	
C146-12C	25 µF	25 V		Electrolytic	
C147-12C	100 µF	10 V		Electrolytic	
C148-12C	300 pF	400 V	20 %	Ceramic	
C150-12C	2,5 µF	64 V	—10/100 %	Electrolytic	
C151-12C	3300 pF	500 V	20 %	Metalized paper	
C152-12C	2,5 µF	64 V	—10/100 %	Electrolytic	

www.hifiengine.com

Ref. No.	Description		Type	Notes
C153-12C	80 µF	25 V	Electrolytic	
C154-12C	25 µF	25 V	Electrolytic	
C155-12C	5 µF	20 V	Tantalum	
C156-12C	100 pF	160 V 2,5 %	Styroflex	
C157-12C	3300 pF	500 V 20 %	Metalized paper	
C159-12C	2,5 µF	64 V —10/100 %	Electrolytic	
C160-12C	80 µF	25 V	Electrolytic	
C162-12C	,1 µF	250 V 20 %	Polyester	
C163-12C	,1 µF	250 V 20 %	Polyester	
C165-12C	80 µF	25 V	Electrolytic	
C166-12C	,022 µF	100 V 10 %	Polyester	
C167-12C	,15 µF	100 V 5 %	Polyester	
C168-12C	,047 µF	100 V 5 %	Polyester	
C169-12C	,015 µF	100 V 2,5 %	Polyester	
C170-12C	,01 µF	250 V 20 %	Metalized paper	
C171-12C	,1 µF	250 V 20 %	Polyester	
C172-12C	,15 µF	100 V 5 %	Polyester	
C173-12C	2,5 µF	64 V —10/100 %	Electrolytic	
C174-12C	2,5 µF	64 V —10/100 %	Electrolytic	
C175-12C	500 pF	600 V 20 %	Metalized paper	
C176-12C	,1 µF	250 V 20 %	Polyester	
C177-12C	80 µF	25 V	Electrolytic	
C178-12C	2,5 µF	64 V —10/100 %	Electrolytic	
C179-12C	,01 µF	250 V 20 %	Metalized paper	
C180-12C	180 pF	500 V 10 %	Ceramic	
C181-12C	40 µF	2,5 V	Electrolytic	Introduced from serial No. 734501
C182-12C	25 µF	15/18 V	Electrolytic	Introduced from serial No. 733051
C183-12C	180 pF	500 V 10 %	Ceramic	
C184-12C	40 µF	2,5 V	Electrolytic	Introduced from serial No. 734501
C185-12C	25 µF	15/18 V	Electrolytic	Introduced from serial No. 733051
C186-12C	68 pF	500 V 10 %		
C187-12C	68 pF	500 V 10 %	Ceramic	
C301-12C	2,5 µF	64 V —10/100 %	Electrolytic	
C302-12C	,01 µF	250 V 20 %	Metalized paper	
C303-12C	,047 µF	250 V 20 %	Polyester	
C304-12C	2,5 µF	64 V —10/100 %	Polyester	Changed from serial No. 749500
C305-12C	100 µF	35/40 V	Electrolytic	
C306-12C	500pF	400 V 20 %	Metalized paper	
C307-12C	320 µF	6,4 V	Electrolytic	
C308-12C	1000 µF	25 V	Electrolytic	
C401-12C	2,5 µF	64 V —10/100 %	Electrolytic	
C402-12C	,01 µF	250 V 20 %	Metalized paper	
C403-12C	,047 µF	250 V 20 %	Polyester	
C404-12C	2,5 µF	64 V —10/100 %	Polyester	Changed from serial No. 749500
C405-12C	100 µF	35/40 V	Electrolytic	
C406-12C	500pF	400 V 20 %	Paper W99	
C407-12C	320 µF	6,4 V	Electrolytic	
C408-12C	1000 µF	25 V	Electrolytic	
C501-12C	,01 µF	250 V 20 %	Metalized paper	
C502-12C	4 µF	400 V	Electrolytic	
C503-12C	,68 µF	100 V 20 %	Electrolytic	
C504-12C	,1 µF	250 V 20 %	Polyester	Changed from serial No. 748700
C505-12C	,1 µF	250 V 20 %	Polyester	Changed from serial No. 748700
C601-12C	,01 µF	250 V 20 %	Metalized paper	
C602-12C	,022 µF	250 V 20 %	Polyester	
C603-12C	,01 µF	250 V 20 %	Metalized paper	
C604-12C	,022 µF	250 V 20 %	Polyester	
C605-12C	80 pF	125 V 5 %	Styroflex	
C606-12C	80 pF	125 V 5 %	Styroflex	

www.hifiengine.com

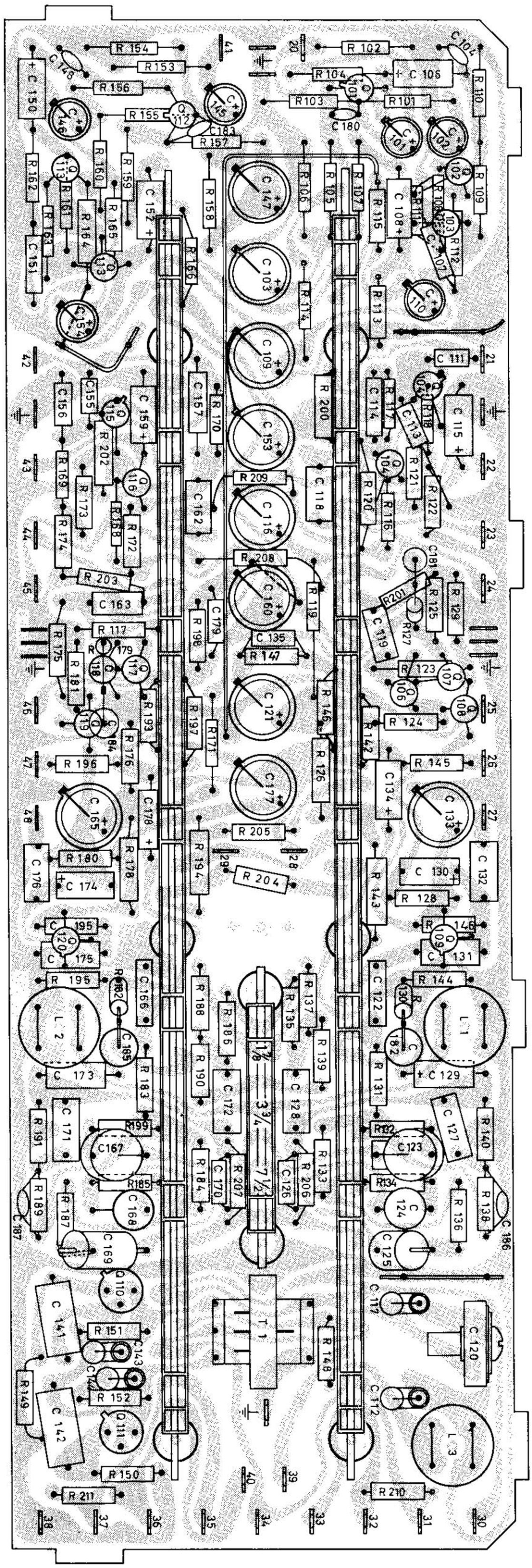

Fig. 57. Amplifier board, component side.

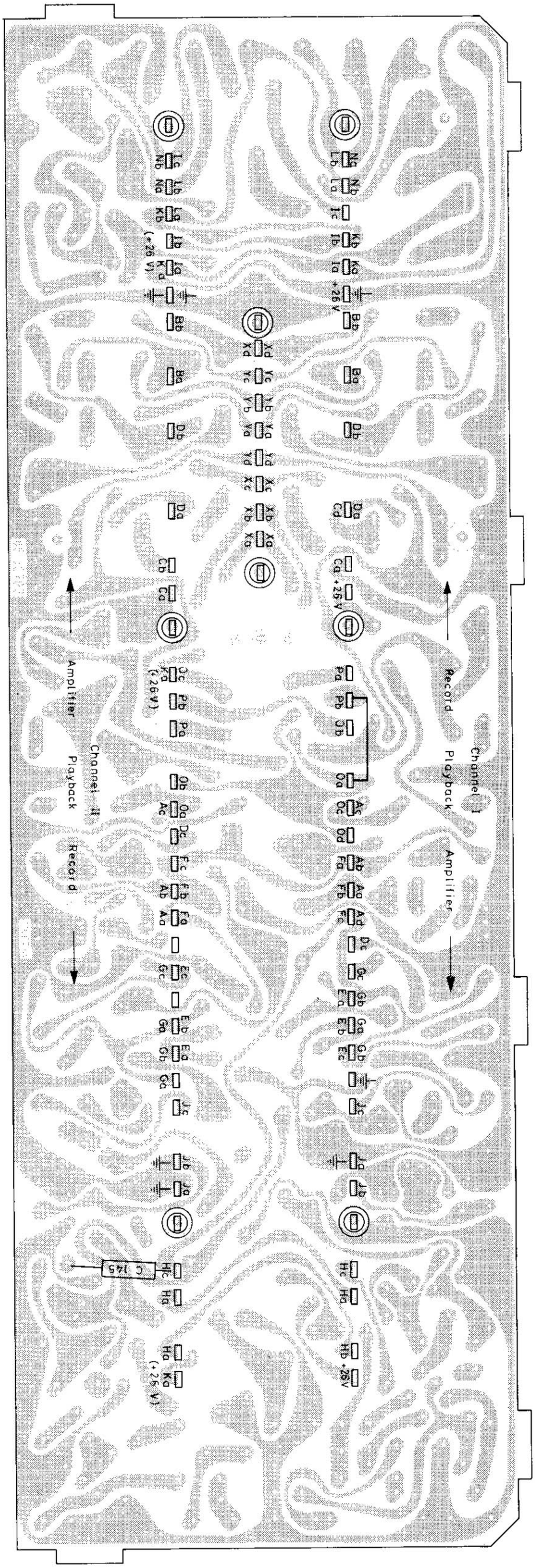

Fig. 58. Amplifier board, printed side.

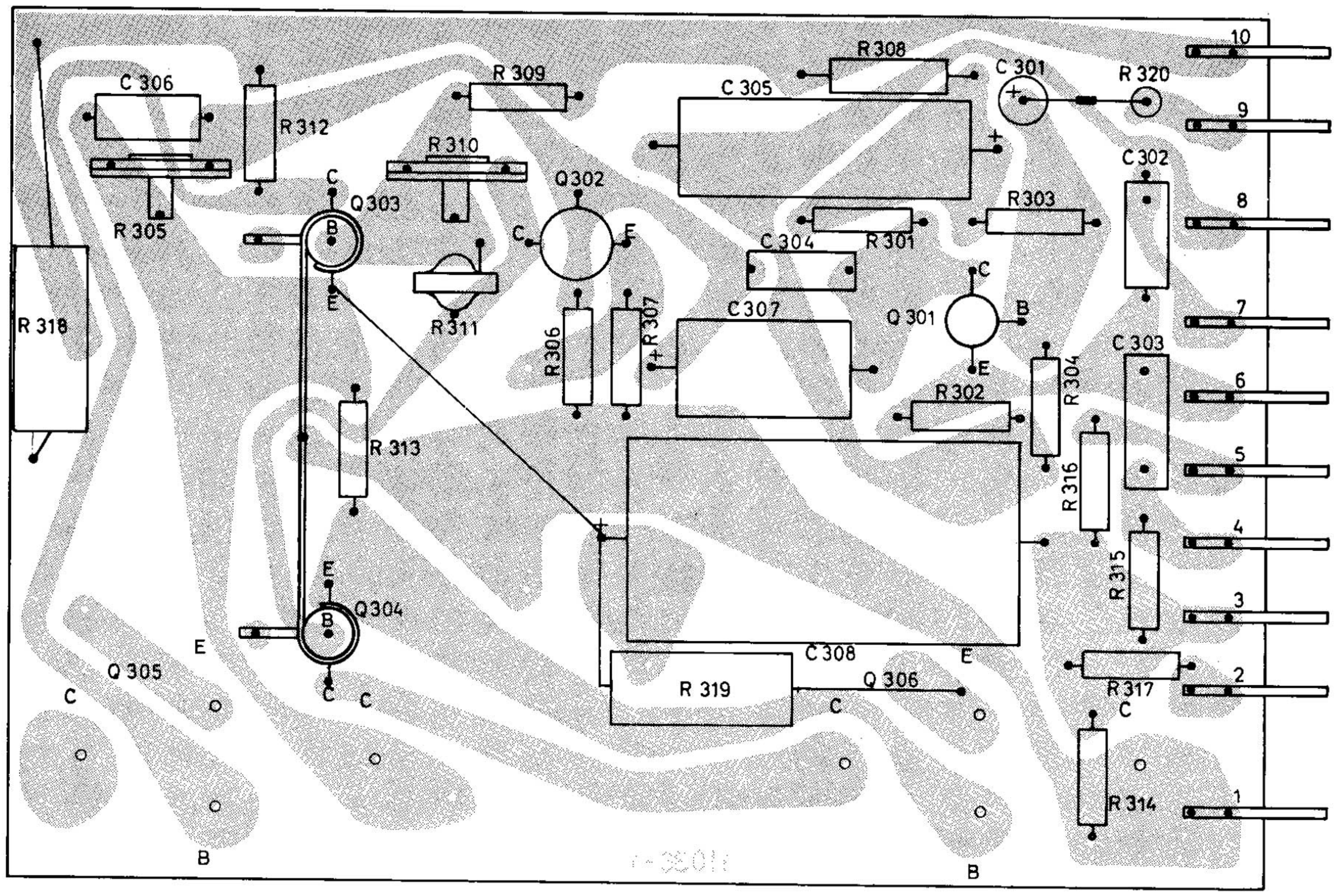

Fig. 59. The power output amplifier board, component side. Used on tape recorders below serial No. 749500.

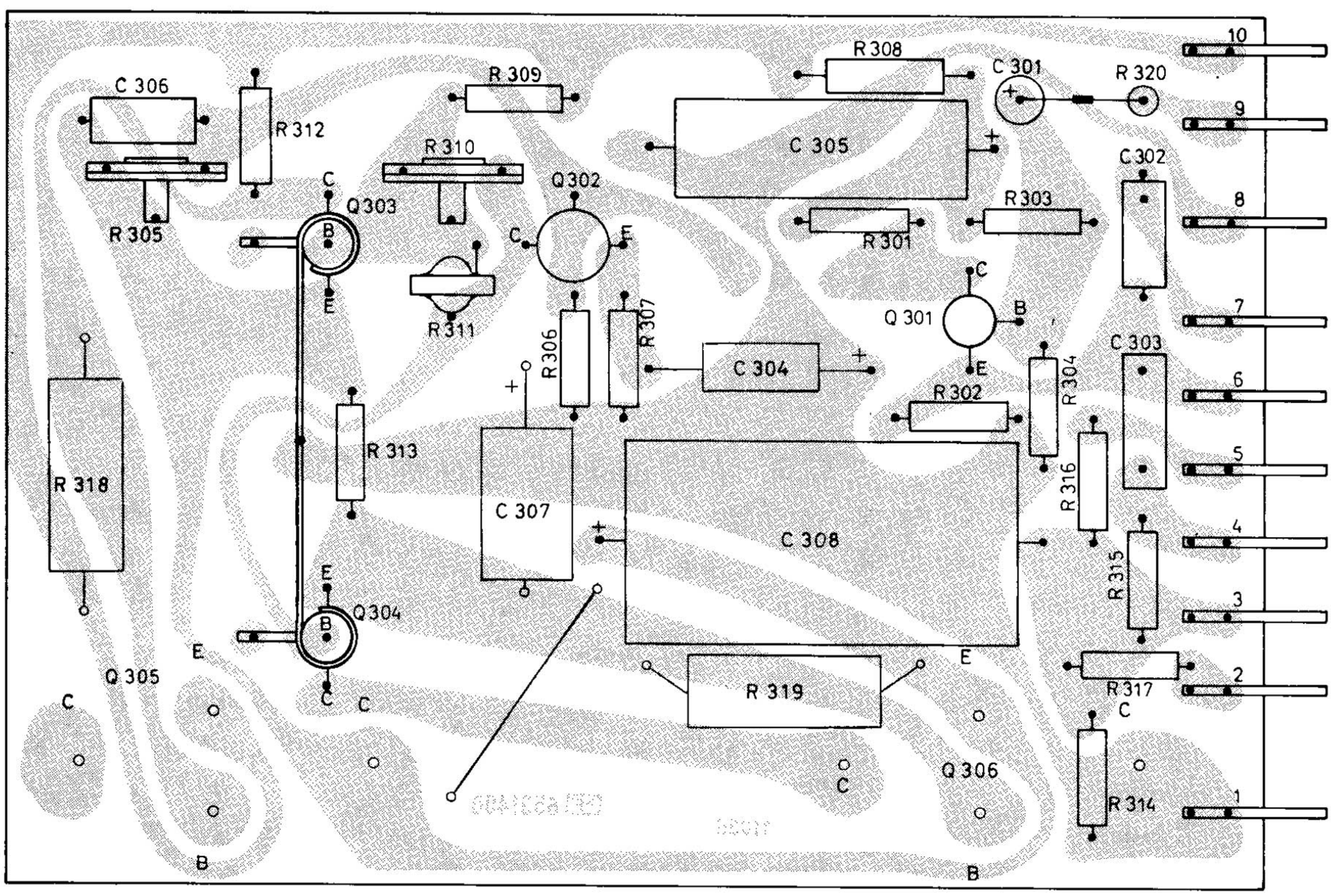

Fig. 60. The power output amplifier board, component side. Used on tape recorders above serial No. 749501.

www.hifiengine.com

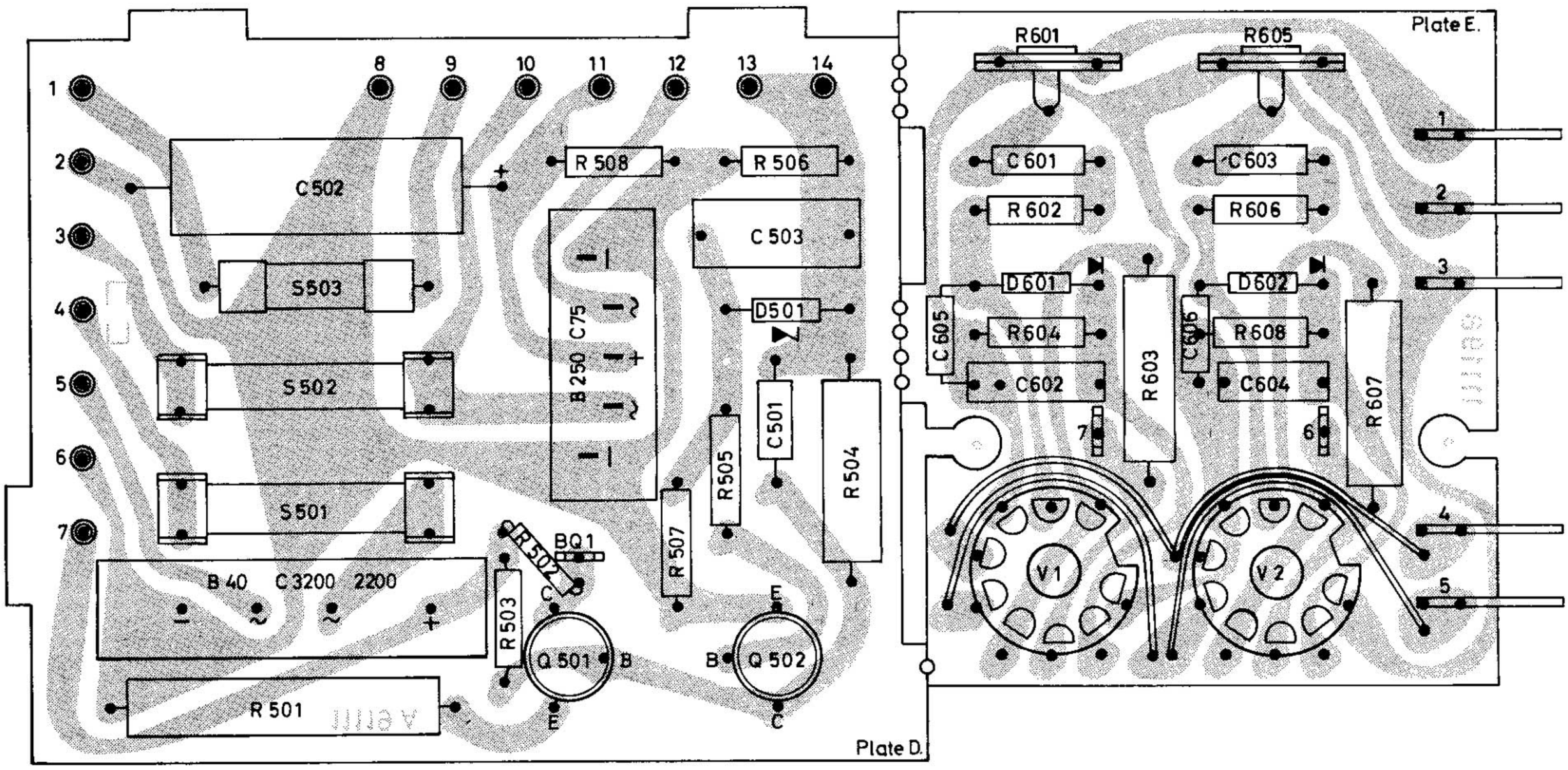

Fig. 61. The rectifier board and the indicator board, component side.

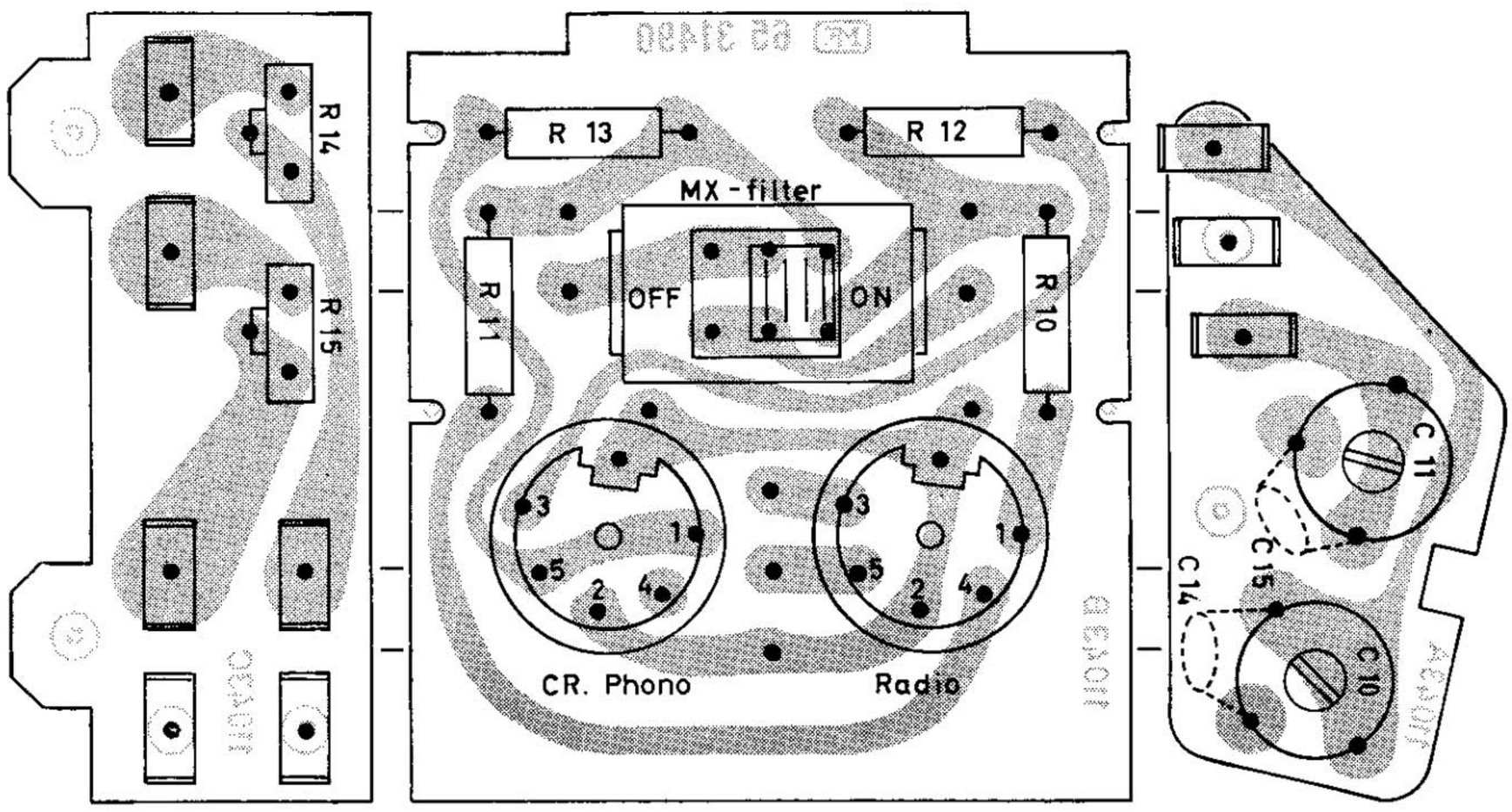

Fig. 62. Record/playback head circuit board, input board and erase head circuit board, component side.

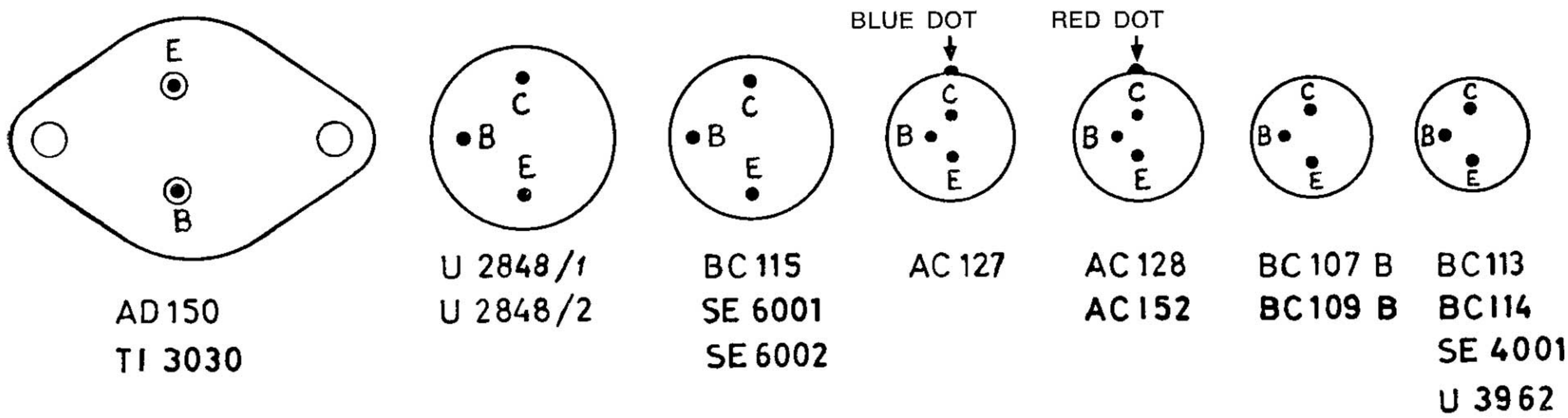

Fig. 63. Connection of the transistors seen from underneath.

www.hifiengine.com

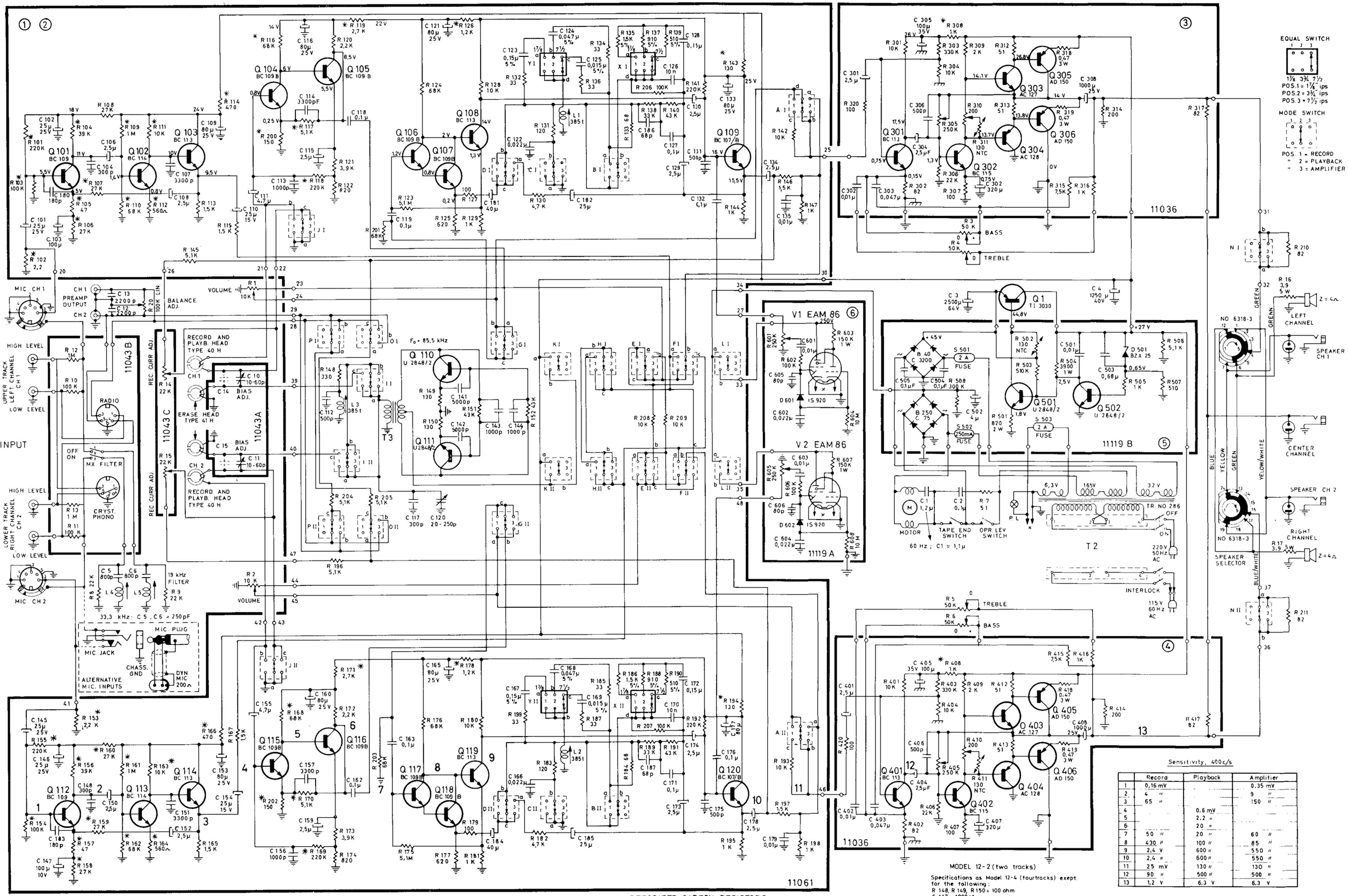

✱ DEPOSITED CARBON RESISTORS

MODEL 12-2 (two tracks)

Specifications as Model 12-4 (fourtracks) exept for the following:
R 148, R 149, R 150 = 100 ohm
C 117 = 1000 pf
C 120 = 150-750 pf. Trimmer.
C 14 = 12 pf.
1 ea. two-track erase head, model 43 H
1 ea. two-track record/playback head, model 39 H
Oscillator transformer T.1.

Sensitivity, 400 c/s

	Record	Playback	Amplifier
1	0,16 mV		0,35 mV
2	4 "		9 "
3	65 "		150 "
4		0,6 mV	
5		2,2 "	
6		20 "	
7	50 "	20 "	60 "
8	430 "	100 "	85 "
9	2,4 V	600 "	550 "
10	2,4 "	600 "	550 "
11	25 mV	130 "	130 "
12	90 "	500 "	500 "
13	1,2 V	6,3 V	6,3 V

Tandbergs Radiofabrikk A/S
TAPE RECORDER MODEL 12-4
DRAWING NO 11118-4
DEC 1966

Fig. 64.

LUBRICATING

The motor:

The motor should be lubricated after approx. every 3000 hours of use.
The upper and the lower bearing should be lubricated with a Teresso oil 43 or 47 from Esso.

The self-lubricating bearings:

The turntables, the flywheel, and the speed transfer wheel are mounted in self-lubricating bearings and should usually not be lubricated. If, however, it should be necessary to lubricate the bearings for any reason use Teresso oil 43 or 47 from Esso.

Note: Utmost care must be taken while lubricating, use only one fraction of a drop of oil for each bearing. Excessive oil might seriously affect the friction drive.

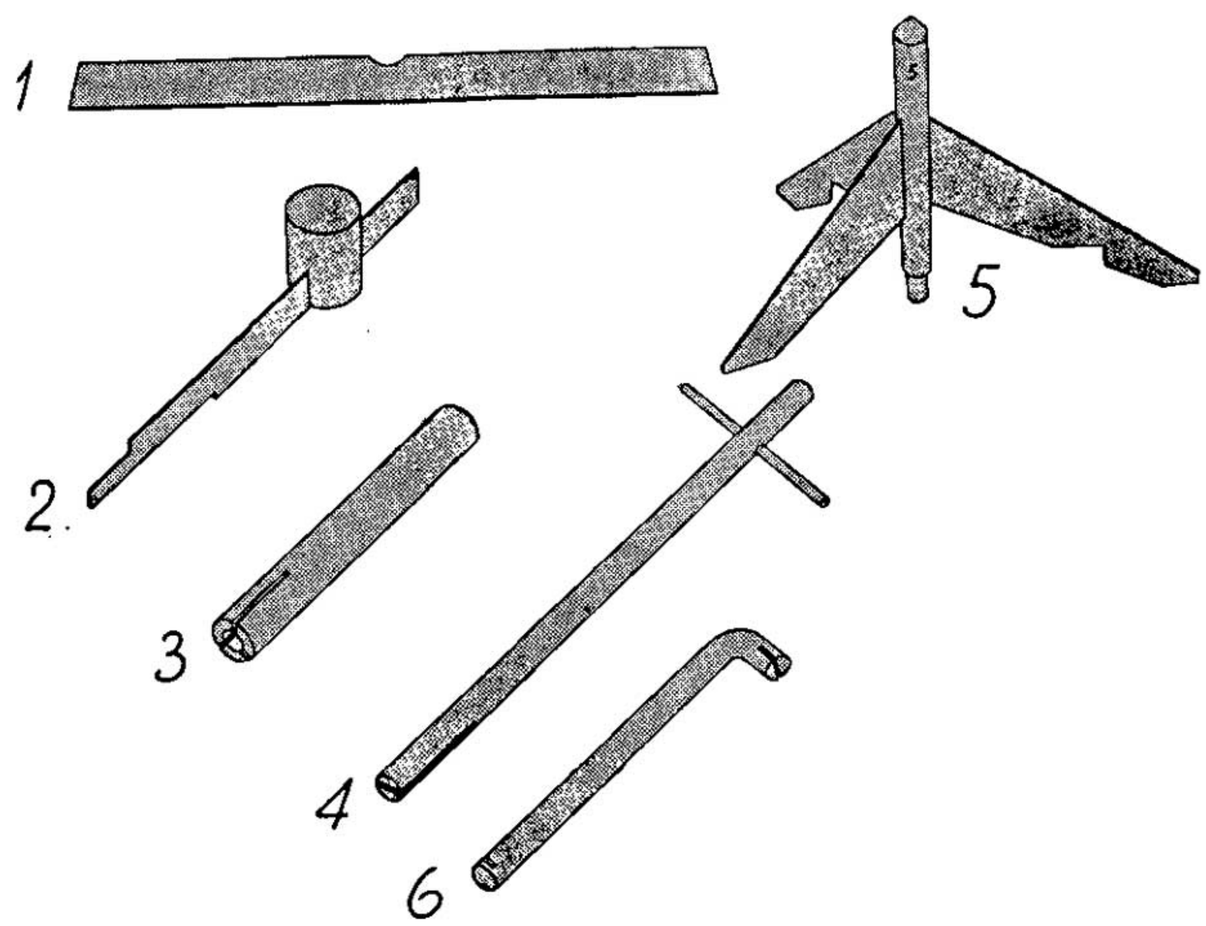

Fig. 49. Special tools.

www.hifiengine.com

Tandbergs Radiofabrikk A/S, Kjelsås.

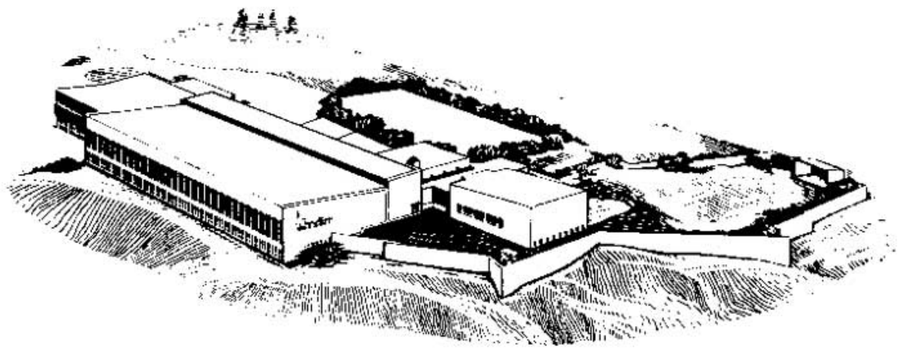

Tandbergs Radiofabrikk A/S, div. Kjeller.

TANDBERGS RADIOFABRIKK A/S

P. O. B. 9, Korsvoll, Oslo 8, Norway

www.hifiengine.com