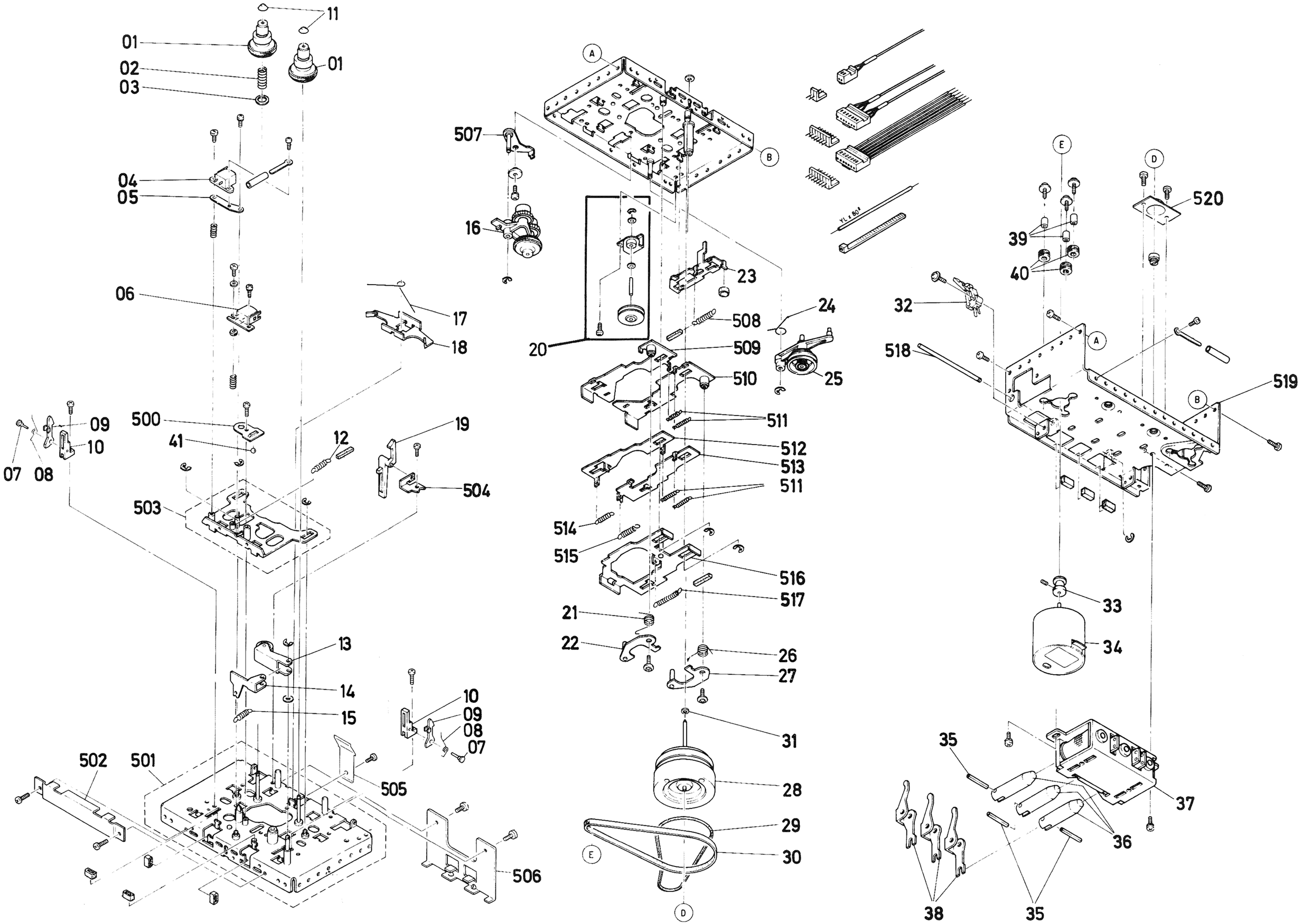
11
01
01
02
03
04
05
06
17
18
09
10
07
08
500
41
12
19
504
503
13
14
15
10
09
08
07
502
501
505
506
507
16
A
B
20
23
24
508
509
510
25
511
512
513
511
514
515
516
517
21
22
26
27
31
28
29
30
E
D
YL ± 80°
520
39
40
32
518
519
33
34
35
37
36
38
35

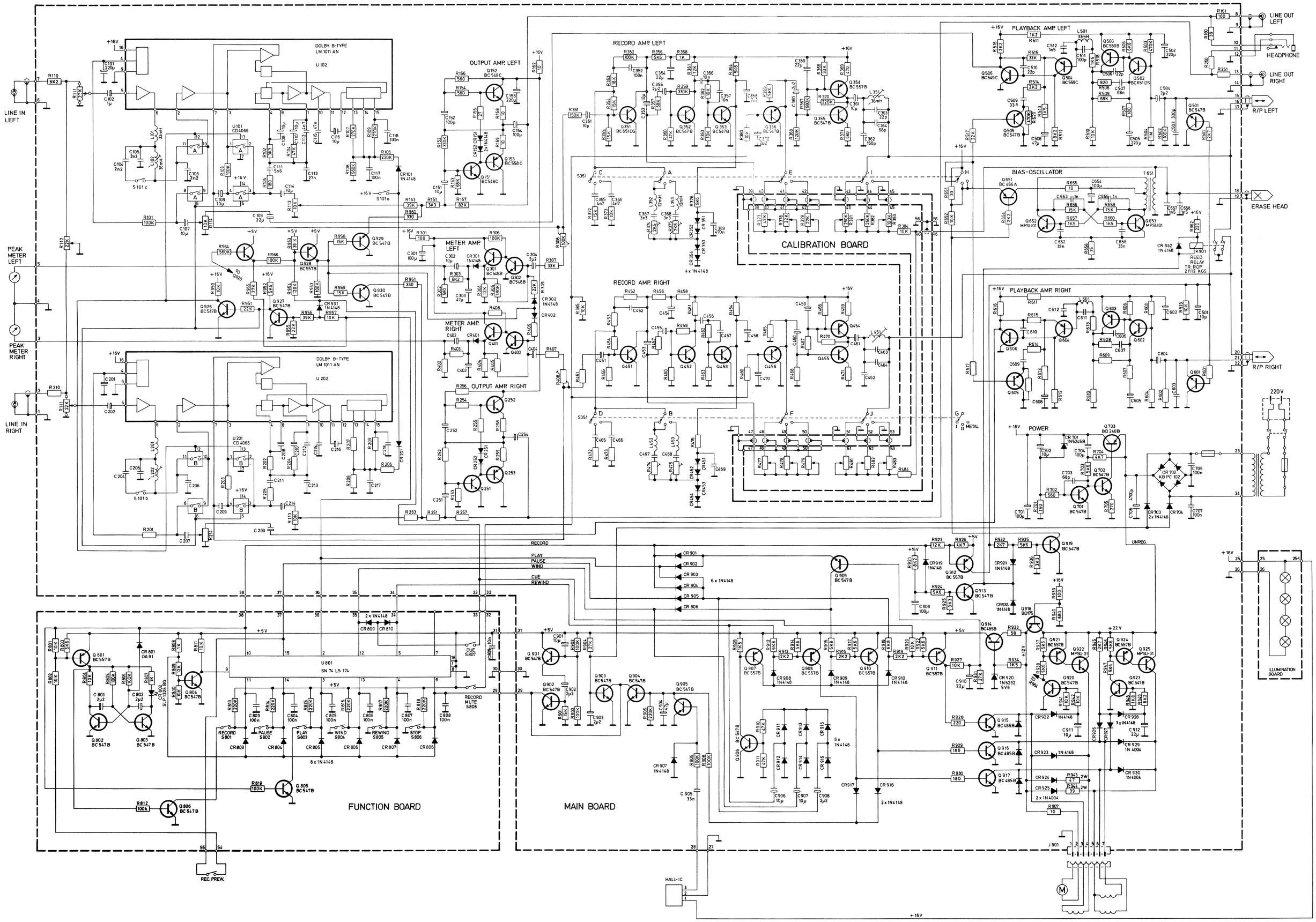

LINE IN LEFT
PEAK METER LEFT
PEAK METER RIGHT
LINE IN RIGHT
DOLBY B-TYPE LM 1011 AN
U 102
U 202
OUTPUT AMP. LEFT
OUTPUT AMP. RIGHT
METER AMP. LEFT
METER AMP. RIGHT
RECORD AMP. LEFT
RECORD AMP. RIGHT
CALIBRATION BOARD
PLAYBACK AMP. LEFT
PLAYBACK AMP. RIGHT
BIAS-OSCILLATOR
POWER
LINE OUT LEFT
HEADPHONE
LINE OUT RIGHT
R/P LEFT
ERASE HEAD
R/P RIGHT
220V
ILLUMINATION BOARD
RECORD
PLAY
PAUSE
WIND
CUE
REWIND
FUNCTION BOARD
MAIN BOARD
U 801
SN 74 LS 174
REC. PREW.
HALL-IC
+16V

MAIN BOARD

TO POWER SUPPLY OUTPUT AMP

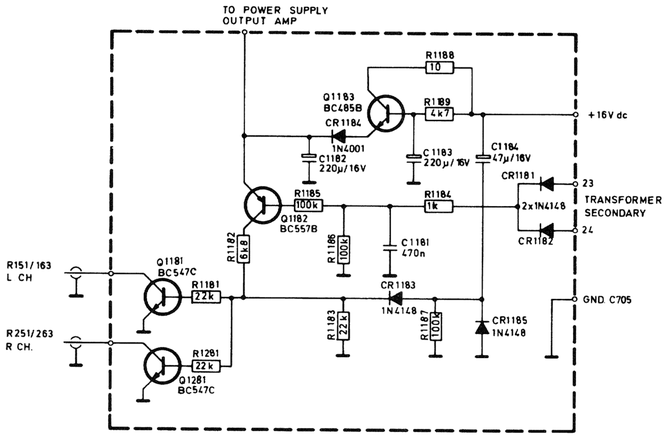

MUTING

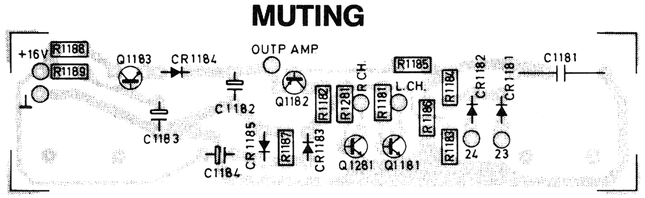

MAIN BOARD

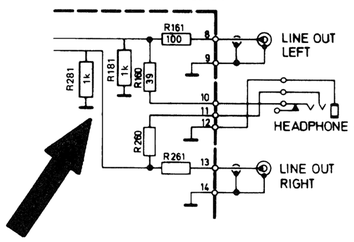

Bei Verwendung einer Muting-Schaltung dieses Typs sind R 181/281 auf der Hauptplatte eingelötet.

If this type of muting circuit is installed, R 181, 281 are soldered on the main board.

En utiliseant un muting-circuit de ce type, R 181, 281 sont soudés sur la plaque centrale.
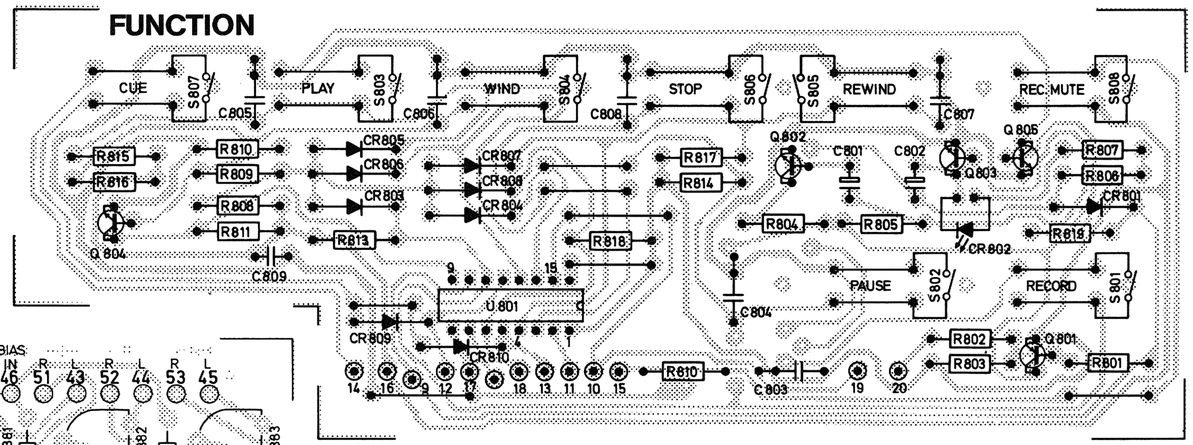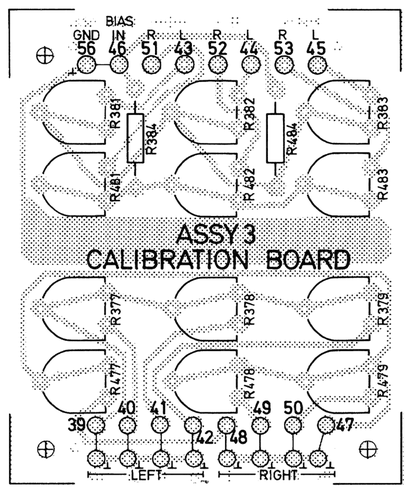
FUNCTION