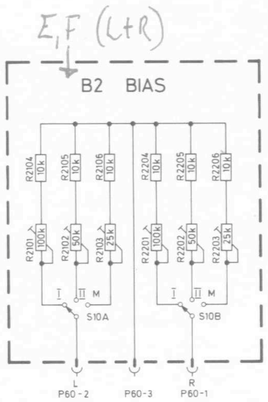


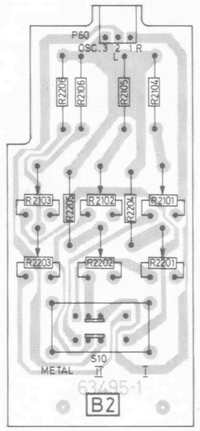


B2 BIAS

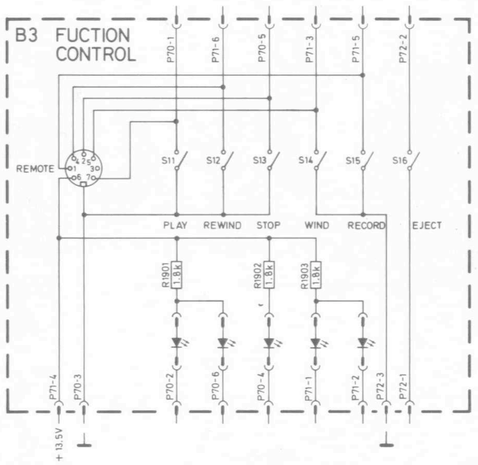


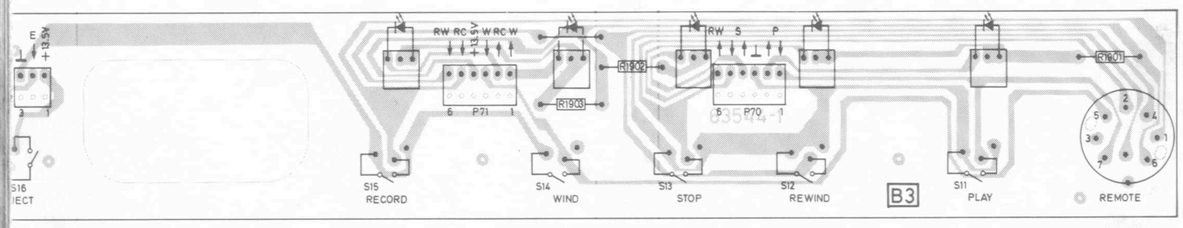


B3 FUNCTION CONTROL

1710 - 10 - 79 Part No. 714128
Printed in Norway by Reclamo A/S



JAN-IVER RIKSTAD

TEL556 048H

# TANDBERG

# TCD 440 A

# Circuit Diagrams with Alignment Instructions

Mechanical adjustments, see Service Manual for TCD 330, Ordering No. 714021

## Electrical adjustments for the TCD 440A

### General

Before adjusting, the tape path must be cleaned and demagnetized. It is necessary that the tape path is correctly adjusted, consult the service manual for the TCD 330, part No. 714021.

Carry out the adjustments in the order described because the adjustments affect each other. Remove the top panel and the base panel.

### Equipment required

- 2 millivoltmeters
- Audio signal generator
- Frequency counter
- Distortion meter
- Wow and flutter meter
- Tandberg test cassettes:
  - No. 21 (Speed check, 1000 Hz)
  - No. 22 (Wow and flutter check, 3150 Hz)
  - No. 23 (Azimuth adj. playb. head, 6300 Hz)
  - No. 24 (Playback level adj., 1000 Hz)
- Measuring cassettes:
  - Maxell UD XL I (Type I)
  - Maxell UD XL II (Type II)
  - Fuji Metal or TDK Metal MA-R (Type IV).

Before adjusting, set the buttons to:

- MPX-FILTER (situated at the back of the deck) to OFF.
- Dolby NR.* to Off.
- Output Level controls to maximum.

**Before adjusting, fold out page 5.**

### Oscillator

The oscillator frequency is between 80 and 100 kHz. The voltage measured on the erase head should be between 7 and 9 volts.

** The word "Dolby" is registrerad trade mark of Dolby Laboratories Inc., U.S.A. NR stands for Noise Reduction.*

### Bias traps

Measure with a millivoltmeter on pin L and R on the oscillator board (see figure) and adjust L1501 and L1601 to minimum reading on the millivoltmeter.

### Sensitivity adjustment

- Set the Monitor button to Source position, and Input and Output Level controls to maximum.
- Apply 8 mV, 1000 Hz to the RADIO socket (DIN) or 80 mV, 1000 Hz to the INPUT sockets (Phono) from the audio signal generator.
- Adjust the SENSITIVITY ADJ. potentiometers R101/R201 to obtain 775 mV measured on a millivolt-meter connected to the Dolby encoder output TP1 and TP2 on the Main board, see figure.
- Move the measure probe to the Dolby decoder output R1303 and R1403 on the Dolby board, see figure.
- Adjust the SOURCE LEVEL ADJ. potentiometers R118/R218 to obtain 775 mV.
- Check the frequency response in Source.

### Azimuth adjustment, playback level

- Insert a Tandberg test cassette No. 23 or a standard azimuth cassette.
- Set the Monitor button to Tape and connect a millivoltmeter to each channel of the OUTPUT sockets.
- Press the Play button. Adjust the playback azimuth screws shown in the figure to obtain maximum reading on each channel.

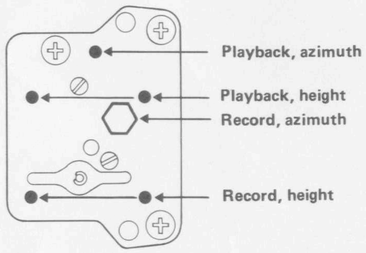


*Adjustments screws for the heads*



### Playback level and meter adjustment

- Insert test cassette No. 24.
- Connect a millivoltmeter to each channel of the Dolby decoder output shown in the figure.
- Adjust the PLAYBACK LEVEL ADJ. potentiometers R119/R219 until you read 775 mV on each channel.

When the playback level is correct, adjust the level meter to 0 dB with PLAYBACK METER ADJ. R114 and R214.

### Azimuth and height, record head

- Set the Bias Selector to I and press the button marked Tape Selector Type I.
- Use Maxell UD XL I or an equivalent Type I tape.
- Apply 1000 Hz to the INPUT sockets both channels.
- Set the Monitor button to Tape and connect a millivoltmeter to the OUTPUT sockets both channels.

  NOTE! The record height screws must be adjusted by equal amounts to ensure that the head parallelism does not change.
- Press the Record button and turn the two record head height screws shown in the figure by equal amounts (the same number of degrees) to obtain the maximum reading on both channels of the OUTPUT sockets, or the best compromise.
- Adjust the azimuth (15 kHz) and the height alternatively, until the head sits correctly.
- Azimuth can also be adjusted with the built-in control oscillator (10 kHz).

### Overall frequency response with Type I tape (bias)

- Set the Monitor button to Tape and press the Tape Selector Type I button.
- Apply 1000 Hz from the signal generator to one of the inputs (RADIO socket or INPUT sockets).
- Reduce the level at the signal generator by 35 dB or reduce the level by a similar amount on the Input Level controls.
- Press the Record button, and adjust the BIAS ADJ. TYPE I TAPE R2101 and R2201 (see figure) to obtain maximum reading at the outputs.
- Sweep the audio generator through the full frequency range and check that the response curve is correct.

  NOTE! Remember the azimuth adjustment on the record head.
- If necessary, adjust the curve with R2101 and R2201 to obtain correct response, ± 3 dB, 20 to 20000 Hz.

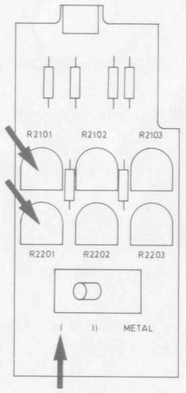


*Bias adjustment board, seen from the component side*

### Adjusting the record current (Source/Tape) Type I tape

- Use the same input level as for the bias adjustment (– 35 dB) and 1000 Hz.
- Adjust the record current by means of the REC. LEVEL ADJ. potentiometers R108 and R208 to obtain the same output level for both positions on the Monitor button.
- Then depress the Dolby NR. button and check the overall frequency response.

### Overall frequency response with Type II tape (bias)

– Use the same procedure as for the Type I tape.

– Insert a Maxell UD XL II or an equivalent Type II tape.

– Press the Tape Selector Type II button, set the Bias Selector to II position and press the Record button.

NOTE! Remember the azimuth adjustment on the record head.

– Check the frequency response, and if necessary, adjust the BIAS ADJ. TYPE II TAPE R2102 and R2202 (see figure) to obtain the correct response, ± 3 dB, 20 to 20000 Hz.

### Adjusting the record current (Source/Tape) Type II tape

– Use the same input level as for the bias adjustment (– 35 dB) and 1000 Hz.

– Adjust the record current by means of the REC. LEVEL ADJ. potentiometers R109 and R209 to obtain the same output level for both positions on the Monitor button.

### Overall frequency response with Metal tape

– Use the same procedure as for Type I tape.

– Insert a Fuji Metal or TDK MA-R (Type IV) tape.

– Set the Bias Selector to Metal position. Press both Tape Selector buttons.

NOTE! Remember the azimuth adjustment on the record head.

– Press the Record button.

– Check the frequency response, and if necessary, adjust BIAS ADJ. METAL TAPE R2103 and R2203 (see figure) to obtain the correct response, ± 3 dB, 20 to 20000 Hz.

### Adjusting the record current (Source/Tape) Metal tape

– Use the same input level as for the bias adjustment (– 35 dB) and 1000 Hz.

– Adjust the record current by means of the REC. LEVEL ADJ. R142 and R242 to obtain same output level for both positions on the Monitor button.

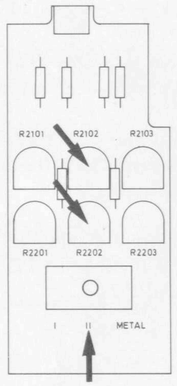


*Bias adjustment board, seen from the component side*

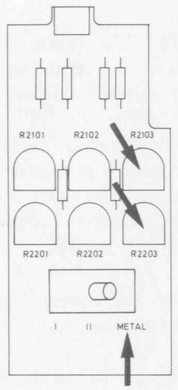


*Bias adjustment board, seen from the component side*



### Level meters adjustment, record

– Use Type I tape.

– Set the Bias Selector to I and press the Tape Selector Type I button.

– Set the Monitor button to Tape position.

NOTE! Remember the azimuth adjustment on the record head.

– Apply 1000 Hz to the INPUT sockets (both channels).

– Press the Record button and adjust the Input Level controls for 1.5 volt reading on the OUTPUT sockets.

– Adjust the REC. METER ADJ. potentiometers R113 and R213 to obtain 0 dB on the level meters.

### DYNEQ adjustment

When the level meters are correct, reduce the level on the audio generator with 10dB. Set the generator to 15 kHz. Adjust with the DYNEQ adjustment R710 and R810, to – 4dB deflection on the level meters.

### Distortion

Record 1000 Hz at 0 dB deflection on the meters. The max. distortion for record/playback are:
3% with Type IV tape (Metal tape).
1% with Type I and Type II tapes.

### Erase test

Record 1000 Hz at 0 dB deflection on the meters. Record again to erase the 1000 Hz signal and play back to ensure that the signal cannot be heard.

### Azimuth meter adjustment

– Set the built-in oscillator to ON.

– Set the Output Level controls to maximum.

– Insert a Type I tape (Maxell UD XL I) and press the Record button.

NOTE! Remember the azimuth adjustment on the record head.

– Adjust R223 AZIMUTH METER ADJ. to approximately – 3 dB deflection on the right meter.

– Check also that the meter deflection with a Type IV tape (Metal) is within the meter scale.

NOTE! Remember the azimuth adjustment on the record head.

### Speed check

Play back Tandberg test cassette No. 21 (Speed check 1000 Hz) and measure with a frequency counter on the OUTPUT sockets:
< ± 0.5% (995 to 1005 Hz).
If necessary, adjust to correct speed with R2008 SPEED ADJ. on the motor control board.

### Wow and flutter check

Play back a Tandberg test cassette No. 22 (3150 Hz) and measure with a wow and flutter meter on the OUTPUT sockets:
Weighted RMS: < 0.09%
Weighted peak: < 0.14%

#### Record/playback

Use a Maxell C-60 UD cassette. Connect the wow and flutter meter generator to the INPUT sockets. Set the deck to Record and record for about half a minute. Wind back the cassette and set the deck to Play. Measure on the OUTPUT with wow and flutter meter:
Weighted RMS: < 0.12%

## Level meters adjustment, record

– Use Type I tape.

– Set the Bias Selector to I and press the Tape Selector Type I button.

– Set the Monitor button to Tape position.

**NOTE!** Remember the azimuth adjustment on the record head.

– Apply 1000 Hz to the INPUT sockets (both channels).

– Press the Record button and adjust the Input Level controls for 1.5 volt reading on the OUTPUT sockets.

– Adjust the REC. METER ADJ. potentiometers R113 and R213 to obtain 0 dB on the level meters.

## DYNEQ adjustment

When the level meters are correct, reduce the level on the audio generator with 10dB. Set the generator to 15 kHz. Adjust with the DYNEQ adjustment R710 and R810, to – 4dB deflection on the level meters.

## Distortion

Record 1000 Hz at 0 dB deflection on the meters. The max. distortion for record/playback are:
3% with Type IV tape (Metal tape).
1% with Type I and Type II tapes.

## Erase test

Record 1000 Hz at 0 dB deflection on the meters. Record again to erase the 1000 Hz signal and play back to ensure that the signal cannot be heard.

## Azimuth meter adjustment

– Set the built-in oscillator to ON.

– Set the Output Level controls to maximum.

– Insert a Type I tape (Maxell UD XL I) and press the Record button.

**NOTE!** Remember the azimuth adjustment on the record head.

– Adjust R223 AZIMUTH METER ADJ. to approximately – 3 dB deflection on the right meter.

– Check also that the meter deflection with a Type IV tape (Metal) is within the meter scale.

**NOTE!** Remember the azimuth adjustment on the record head.

## Speed check

Play back Tandberg test cassette No. 21 (Speed check 1000 Hz) and measure with a frequency counter on the OUTPUT sockets:
< ± 0.5% (995 to 1005 Hz).
If necessary, adjust to correct speed with R2008 SPEED ADJ. on the motor control board.

## Wow and flutter check

Play back a Tandberg test cassette No. 22 (3150 Hz) and measure with a wow and flutter meter on the OUTPUT sockets:
Weighted RMS: < 0.09%
Weighted peak: < 0.14%

### Record/playback

Use a Maxell C-60 UD cassette. Connect the wow and flutter meter generator to the INPUT sockets. Set the deck to Record and record for about half a minute. Wind back the cassette and set the deck to Play. Measure on the OUTPUT with wow and flutter meter:
Weighted RMS: < 0.12%

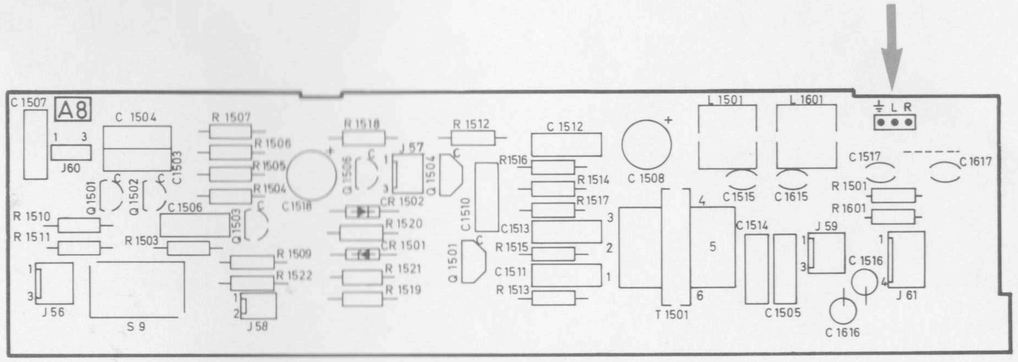


*Oscillator measurement points, seen from the component side*

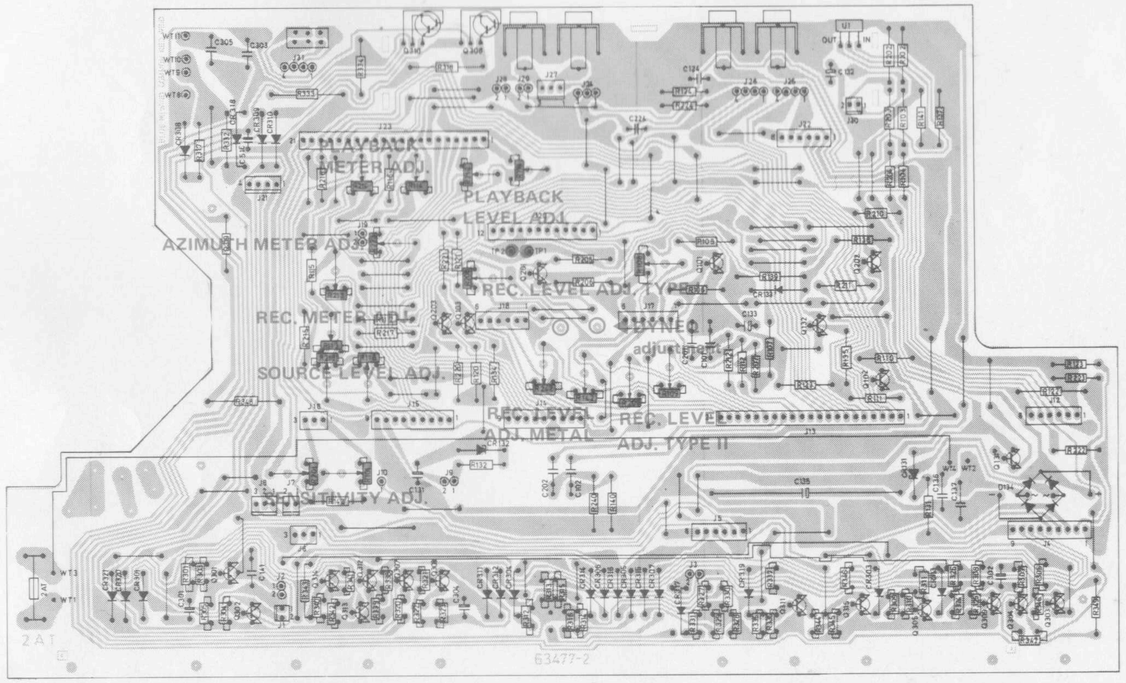


*Trimming pots. and Dolby encoder measurement points, seen from the solder side*

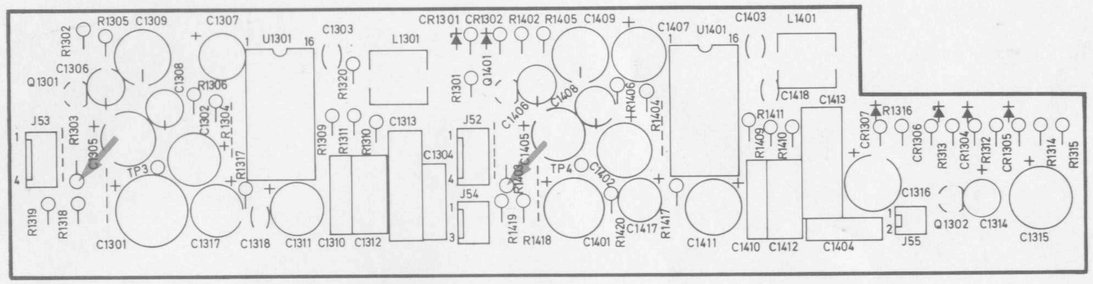


*Dolby decoder measurement points, seen from the component side*

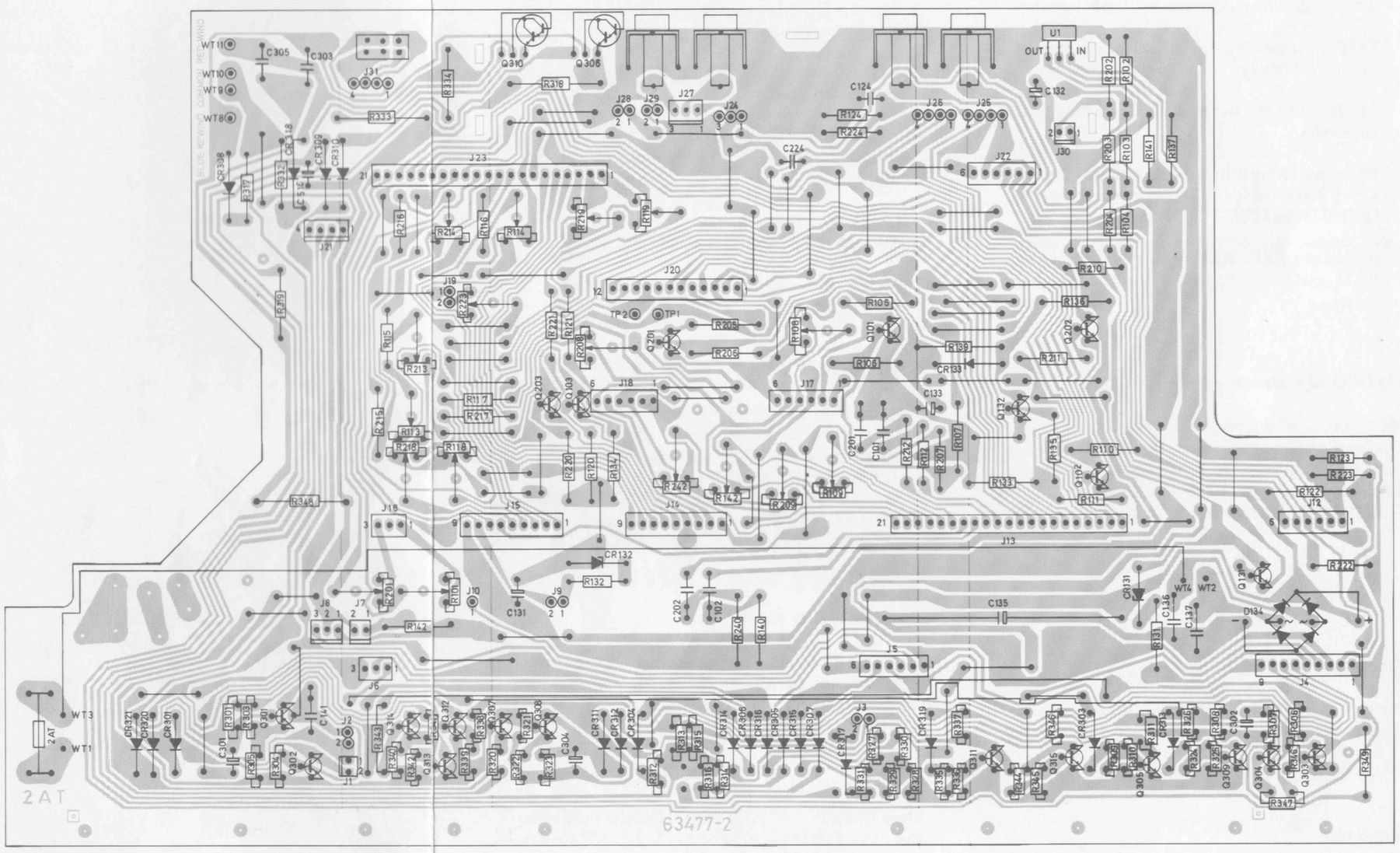
BLUE REWIND COMMON RED REWIND
WT11
WT10
WT9
WT8
WT3
WT1
2AT
OUT
IN
WT4
WT2
63477-2

A1 MAIN

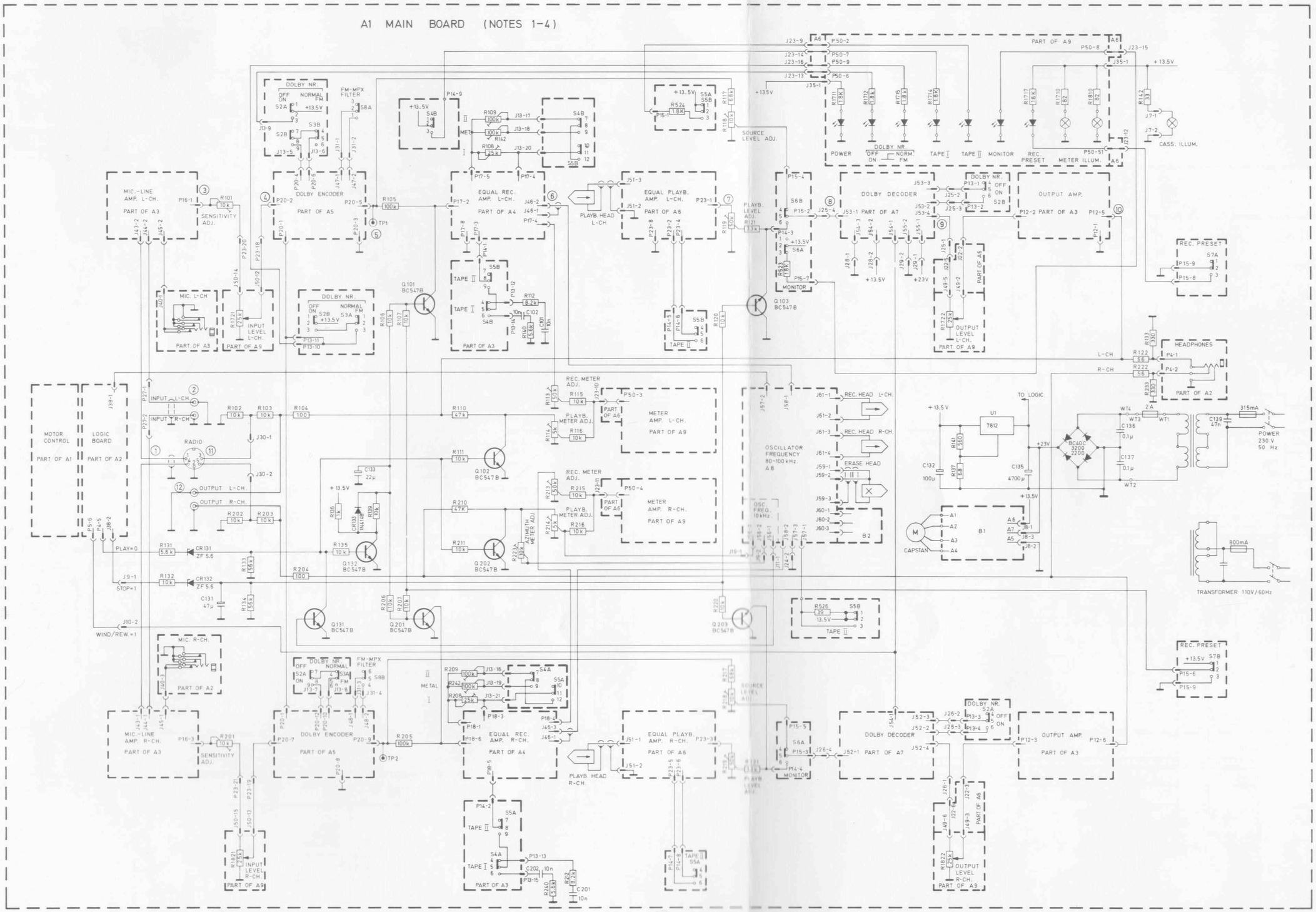


THE SWITCHES ARE SEEN FROM THE SOLDER SIDE.

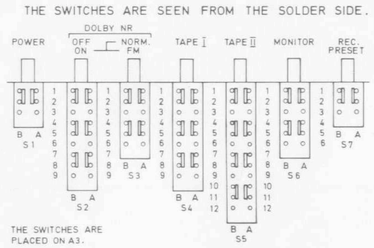


THE SWITCHES ARE PLACED ON A3.

THE FM-MPX AND AZIMUTH CAL. SWITCHES ARE SEEN FROM THE FRONT SIDE.

FM-MPX SWITCH. PLACED ON A1.

AZIMUTH CAL. SWITCH. PLACED ON A8.

## A1 MAIN

NOTES:

1. UNLESS OTHERWISE SPECIFIED, RESISTANCE IN OHMS.
2. ALL SWITCHES ARE SHOWN IN THE "POWER OFF" POSITION.
3. LEFT CHANNEL COMPONENTS HAVE 101-130, RIGHT CHANNEL COMPONENTS HAVE 201-230. COMPONENTS COMMON FOR BOTH CHANNELS HAVE 131-199.
4. LOGICAL LEVELS FROM LOGIC BOARD:
   J38-1: ONLY LOW IN RECORD.
   J4-5: ONLY LOW IN PLAY.
   J39-4: ONLY HIGH IN STOP.
   J5-6: ONLY HIGH IN WIND AND REWIND.
   LOW IS VOLTAGE BELOWE 1.5V.
   HIGH IS VOLTAGE ABOVE 10V.

TABLE/ SENSITIVITY OF AMPLIFIERS

| | SENSITIVITY AT 1000 Hz | OSC READ (P-P |
|---|---|---|
| 1 | 8 mV | 22 mV |
| 2 | 80 mV | 226 mV |
| 3 | 25 mV | 70 mV |
| 4 | 22 mV | 62 mV |
| 5 | 775 mV | 2.2 V |
| 6 | 1.1 V | 3.1 V |
| 7 | 80 mV | 226 mV |
| 8 | 40 mV | 113 mV |
| 9 | 250 mV | 700 mV |
| 10 | 1.5 V | 4.24 V |
| 11 | 775 mV | 2.2 V |
| 12 | 1.5 V | 4.24 V |

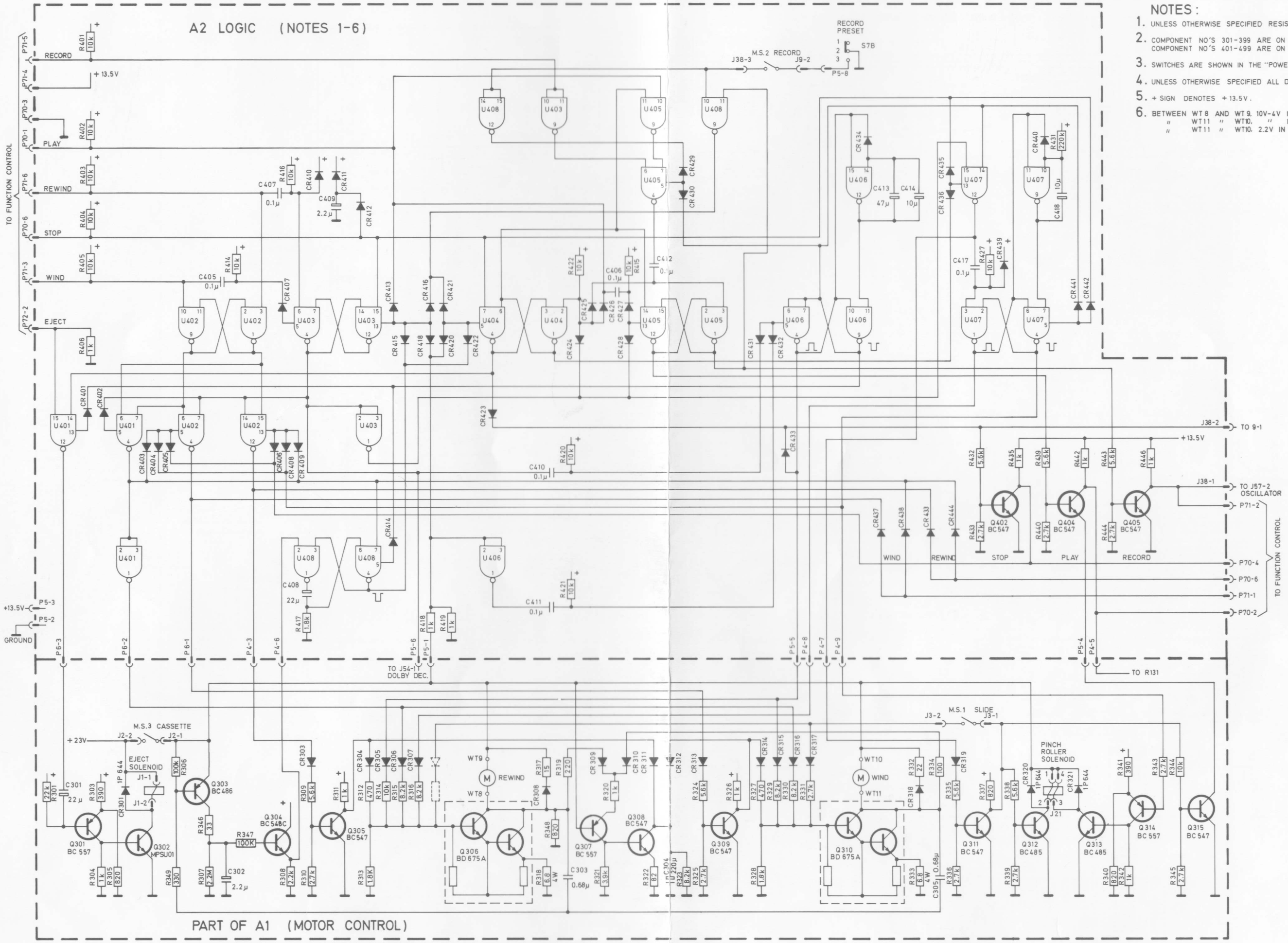


## NOTES :

1. UNLESS OTHERWISE SPECIFIED RESISTANCE IN OHMS.
2. COMPONENT NO'S 301-399 ARE ON ASSEMBLY 1(A1).
   COMPONENT NO'S 401-499 ARE ON ASSEMBLY 2(A2).
3. SWITCHES ARE SHOWN IN THE "POWER OFF" POSITION.
4. UNLESS OTHERWISE SPECIFIED ALL DIODES ARE 1N4148.
5. + SIGN DENOTES +13.5V.
6. BETWEEN WT8 AND WT9, 10V-4V IN REWIND MODE.
   " WT11 " WT10, " IN WIND MODE.
   " WT11 " WT10, 2.2V IN PLAY MODE.

A2 LOGIC

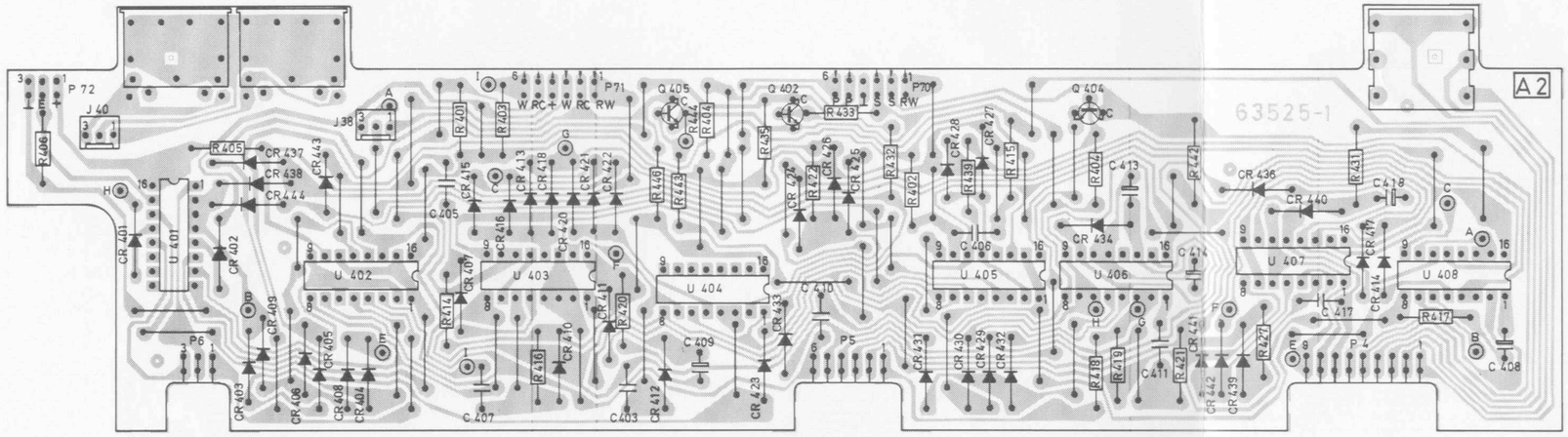


A2 LOGIC

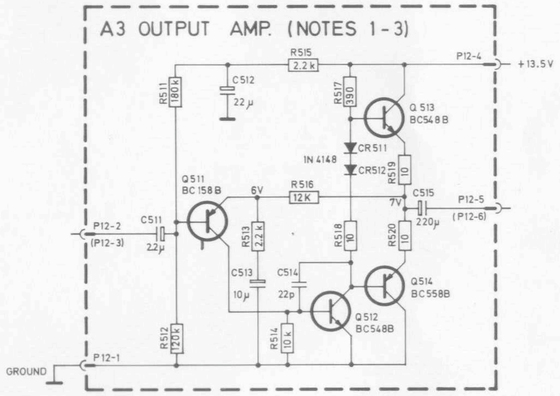


NOTES:

1. UNLESS OTHERWISE SPECIFIED RESISTANCE IN OHMS.
2. PLUG TERMINAL NO'S FOR THE R-CHANNEL ARE GIVEN IN BRACKETS BESIDE THE L-CHANNEL PLUG TERMINAL NO'S.
3. L-CHANNEL HAS 511-599, AND R-CHANNEL HAS 611-699 AS COMPONENT NO'S. WHEN REFERING TO R-CHANNEL COMPONENT ADD 100 TO THE L-CHANNEL NO'S. (E.G. R511 OF THE L-CHANNEL HAS THE SAME VALUE AS R611 OF THE R-CHANNEL.)

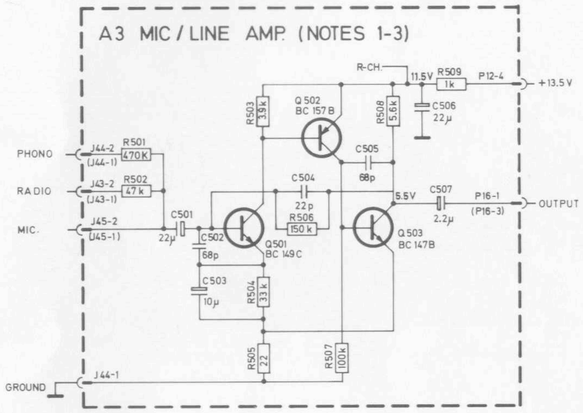


NOTES:

1. UNLESS OTHERWISE SPECIFIED RESISTANCE IN OHMS.
2. PLUG TERMINAL NO'S FOR THE R-CHANNEL ARE GIVEN IN BRACKETS BESIDE THE L-CHANNEL PLUG TERMINAL NO'S.
3. L-CHANNEL HAS 501-510, AND R-CHANNEL HAS 601-610 AS COMPONENT NO'S. WHEN REFERING TO R-CHANNEL COMPONENT ADD 100 TO THE L-CHANNEL NO'S (E.G. R501 OF THE L-CHANNEL HAS THE SAME VALUE AS R 601 OF THE R-CHANNEL.)

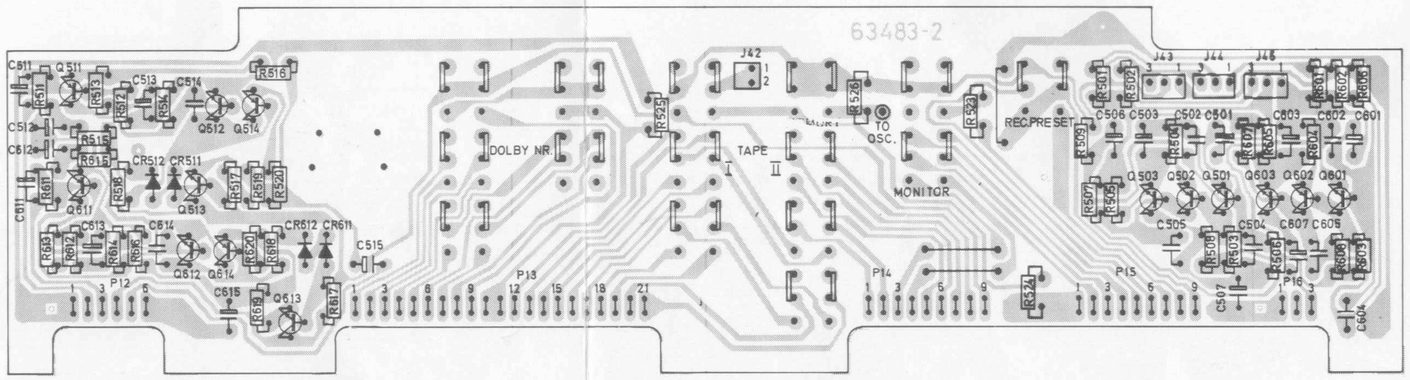


A3 OUTPUT MIC/LINE AMP.

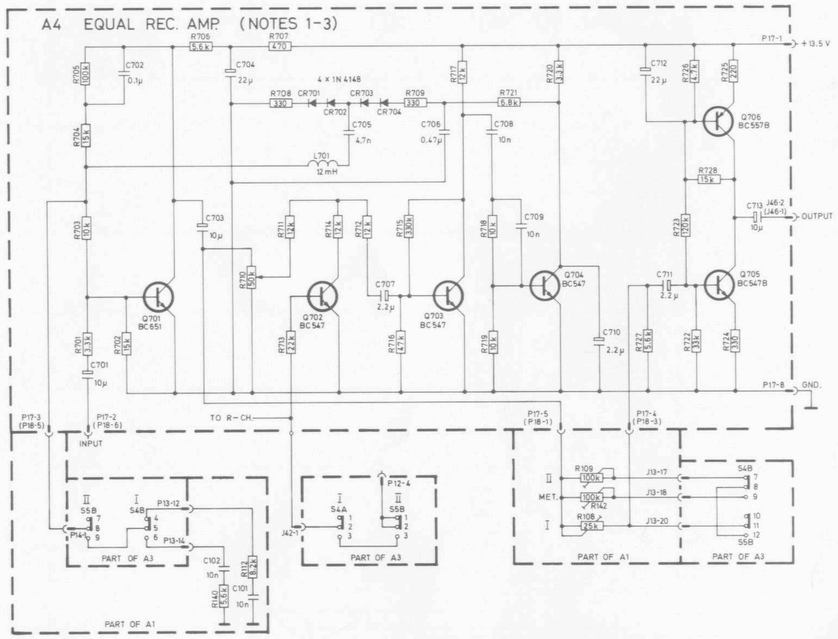


NOTES :

1. UNLESS OTHERWISE SPECIFIED, RESISTANCE IN OHMS.
2. PLUG TERMINAL NO'S FOR THE R-CHANNEL ARE GIVEN IN BRACKETS BESIDE THE L-CHANNEL PLUG TERMINAL NO'S.
3. L-CHANNEL HAS 701-799, AND R-CHANNEL HAS 801-899 AS COMPONENT NO'S. WHEN REFERING TO R-CHANNEL COMPONENT ADD 100 TO THE L-CHANNEL NO'S. (E.G. R701 OF THE L-CHANNEL HAS THE SAME VALUE AS R801 OF THE R-CH.

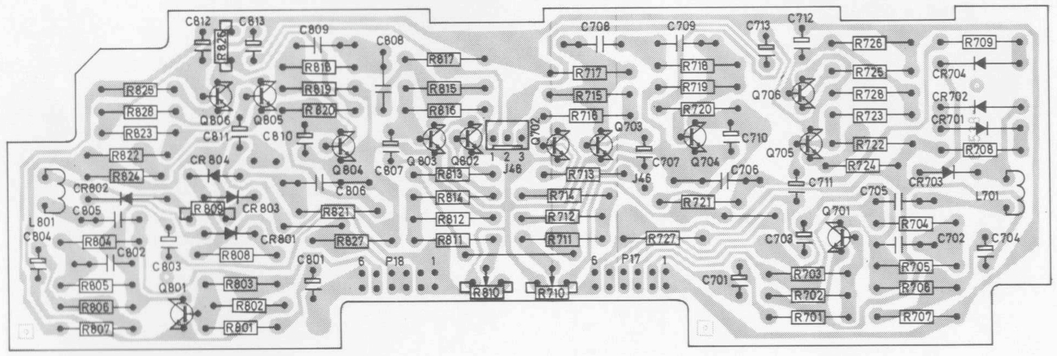

A4 EQUAL REC. AMP.

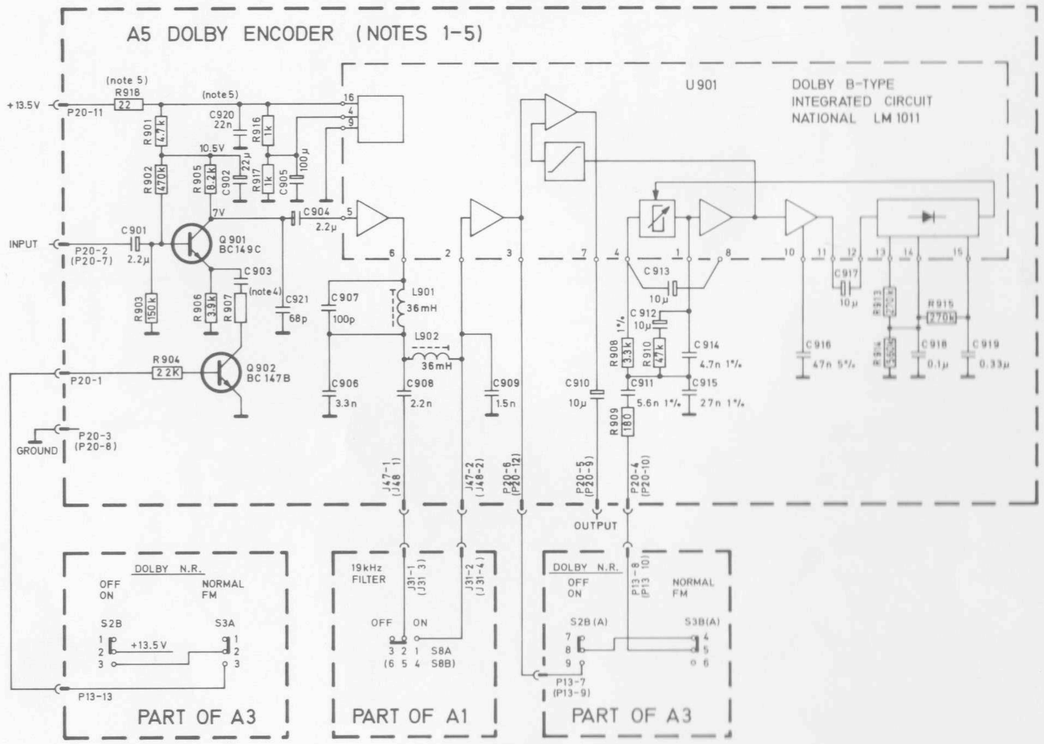


NOTES :

1. UNLESS OTHERWISE SPECIFIED RESISTANCE IN OHMS
2. PLUG TERMINAL NO'S FOR THE R-CHANNEL ARE GIVEN IN BRACKETS BESIDE THE L-CHANNEL PLUG TERMINAL NO'S.
3. L-CHANNEL HAS 901-999, AND R-CHANNEL HAS 1001-1099 AS COMPONENT NO'S. WHEN REFERING TO R-CHANNEL COMPONENT ADD 100 TO THE L-CHANNEL NO'S. (E.G. R901 OF THE L-CHANNEL HAS THE SAME VALUE AS R1001 OF THE R CHANNEL.)
4. R907 = 2.2K, C903 = 15n GIVES α"75-25" DOLBY FM COMPENSATOR

   R907 = 3.3K, C903 = 12n GIVES α"50-25" DOLBY FM COMPENSATOR
5. R918 AND C920 ONLY ON L-CHANNEL.

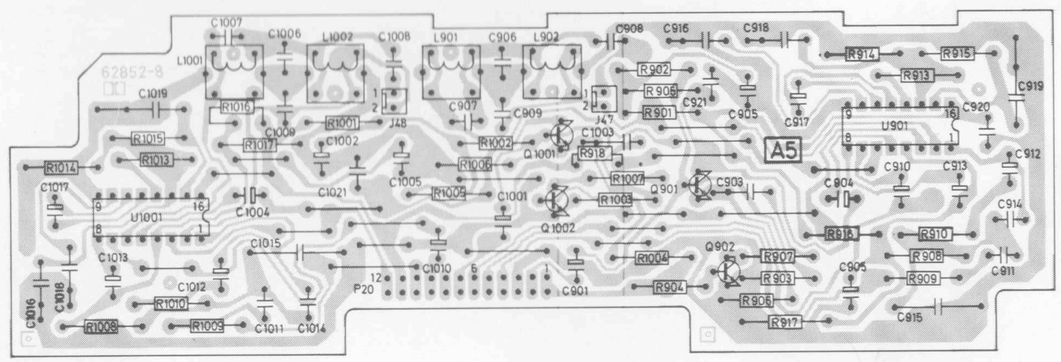

A5 DOLBY ENCODER

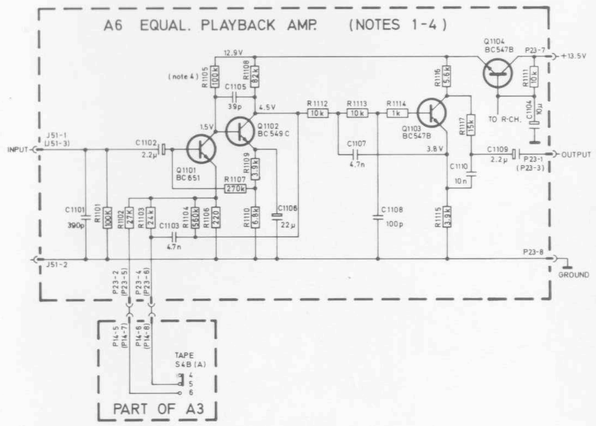


NOTES:

1. UNLESS OTHERWISE SPECIFIED RESISTANCE IN OHMS.
2. PLUG TERMINAL NO'S FOR THE R-CHANNEL ARE GIVEN IN BRACKETS BESIDE THE L-CHANNEL PLUG TERMINAL NO'S.
3. L-CHANNEL HAS 1101-1199, AND R-CHANNEL HAS 1201-1299 AS COMPONENT NO'S. WHEN REFERING TO R-CHANNEL COMPONENT ADD 100 TO THE L-CHANNEL NO'S. (E.G. R1101 OF THE L-CHANNEL HAS THE SAME VALUE AS R1201 OF THE R-CHANNEL.)
4. R1105 AND R1205 ARE METAL FILM RESISTORS.

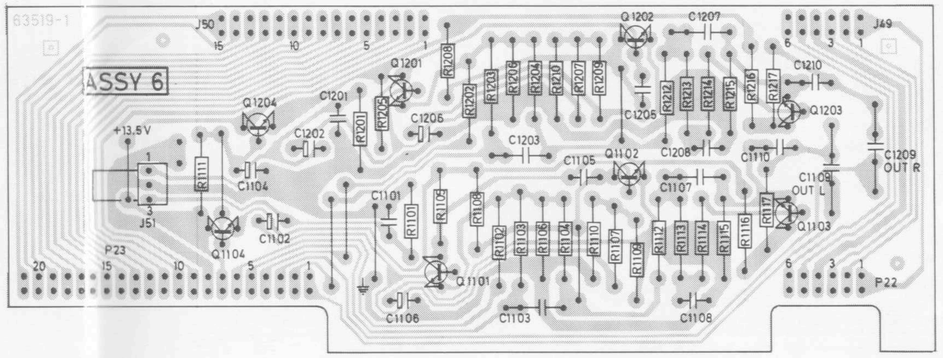


## A6 EQUAL PLAYBACK AMP.

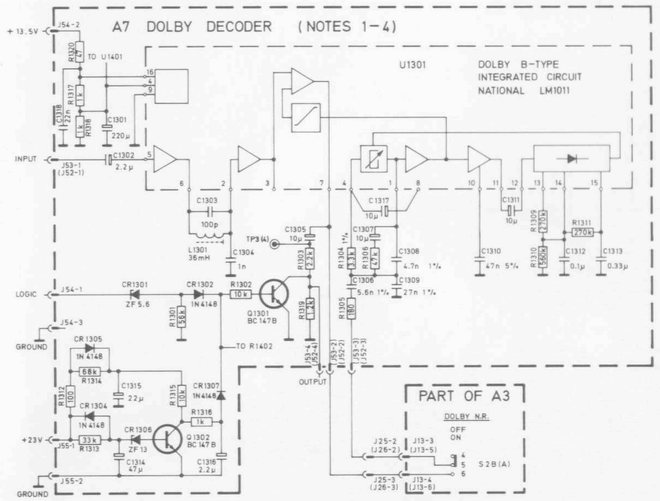


NOTES:

1. UNLESS OTHERWISE SPECIFIED RESISTANCE IN OHMS.
2. PLUG TERMINAL NO'S FOR THE R-CHANNEL ARE GIVEN IN BRACKETS BESIDE THE L-CHANNEL PLUG TERMINAL NO'S.
3. L-CHANNEL HAS 1301-1399, AND R-CHANNEL HAS 1401-1499 AS COMPONENT NO'S. WHEN REFERING TO R-CHANNEL COMPONENT ADD 100 TO THE L-CHANNEL NO'S. (E.G. R1301 OF THE L-CHANNEL HAS THE SAME VALUE AS R1401 OF THE R-CHANNEL.)
4. P54-1, ONLY HIGH IN WIND-REWIND.

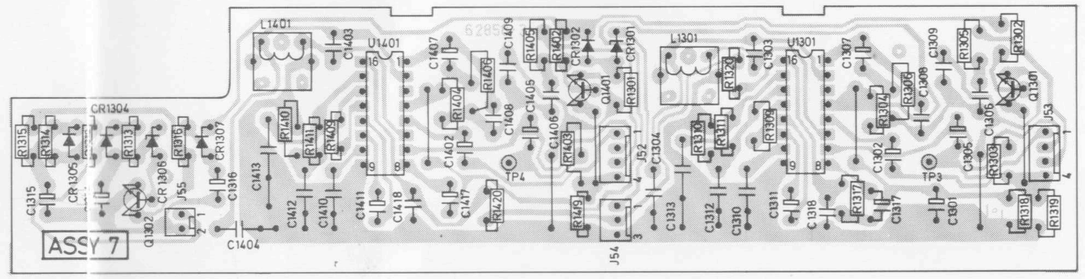


## A7 DOLBY DECODER

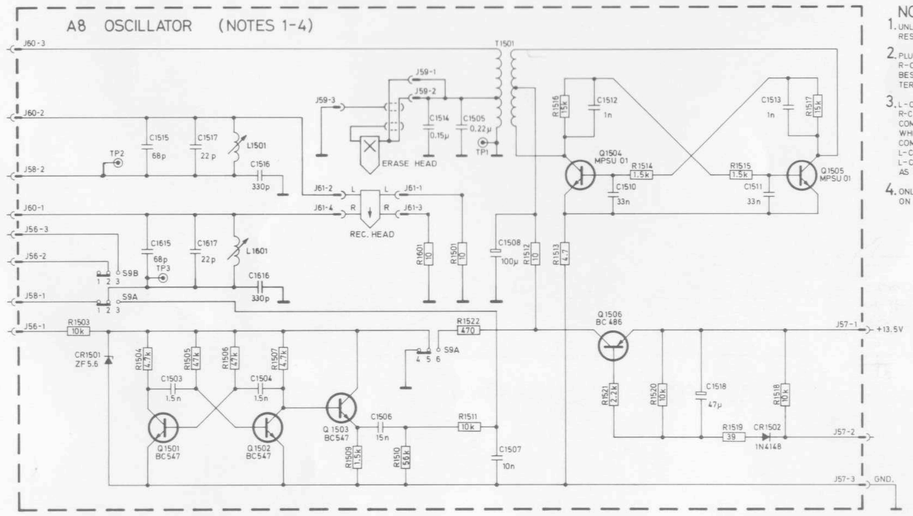


NOTES:

1. UNLESS OTHERWISE SPECIFIED RESISTANCE IN OHMS.
2. PLUG TERMINAL NO.S FOR THE R-CHANNEL ARE GIVEN IN BRACKETS BESIDE THE L-CHANNEL PLUG TERMINAL NO'S.
3. L-CHANNEL HAS 1501-1599, AND R-CHANNEL HAS 1601-1699 AS COMPONENT NO'S. WHEN REFERING TO R-CHANNEL COMPONENT ADD 100 TO THE L-CHANNEL NO'S. (E.G. R1501 OF THE L-CHANNEL HAS THE SAME VALUE AS R1601 OF THE R-CHANNEL.)
4. ONLY LOW LEVEL (BELOW 1.5V) ON J57-2 IN RECORD.

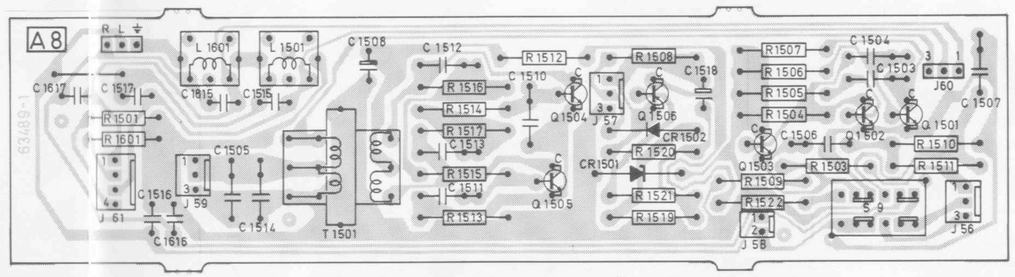


## A8 OSCILLATOR

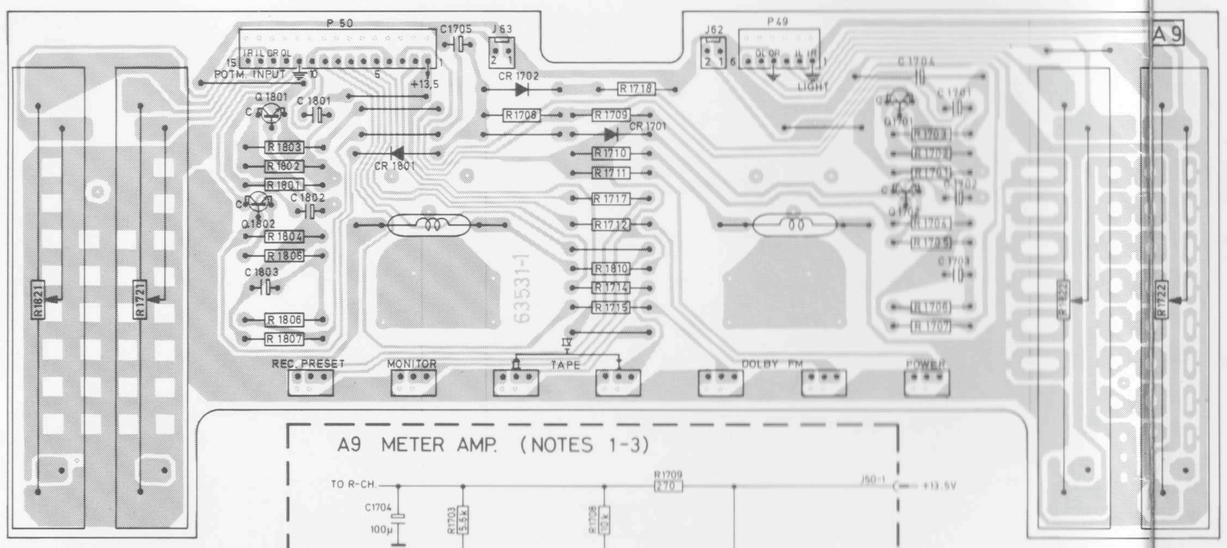


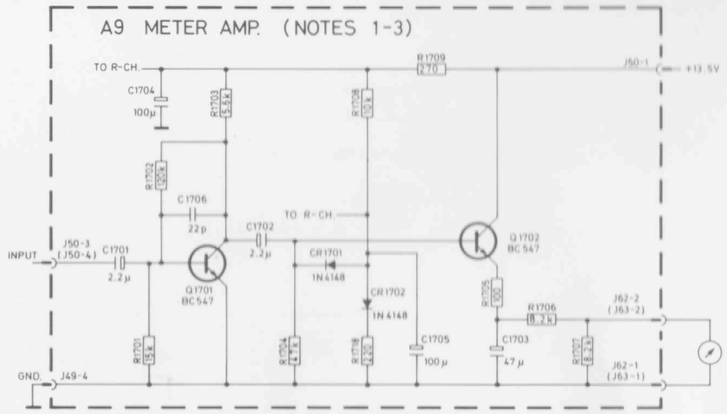


A9 METER AMP.

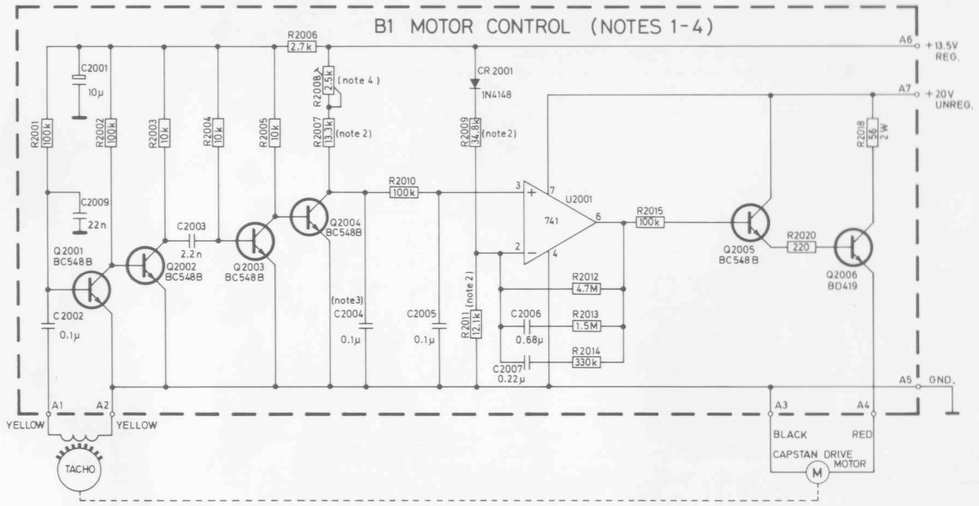


NOTES:

1. UNLESS OTHERWISE SPECIEFIED RESISTANCE IN OHMS.
2. R2007, R2009 AND R2011 ARE 1% METAL FILM RESISTORS.
3. C2004 = 0.1μ 5% POLYKARBONAT.
4. R2008 = THICK FILM VARIABLE RESISTOR.

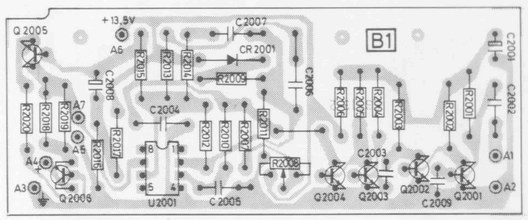


B1 MOTOR CONTROL

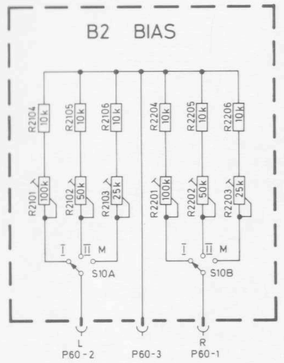


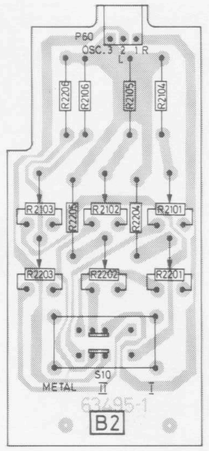


B2 BIAS

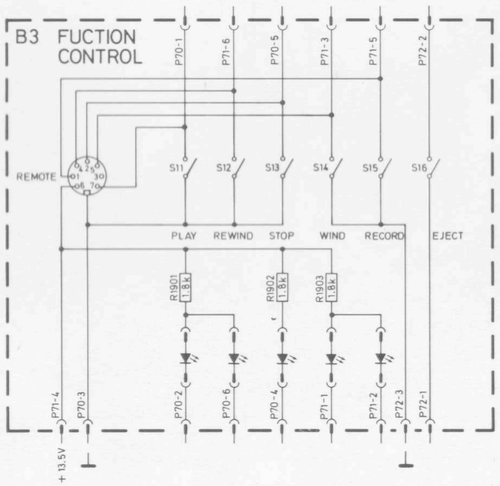


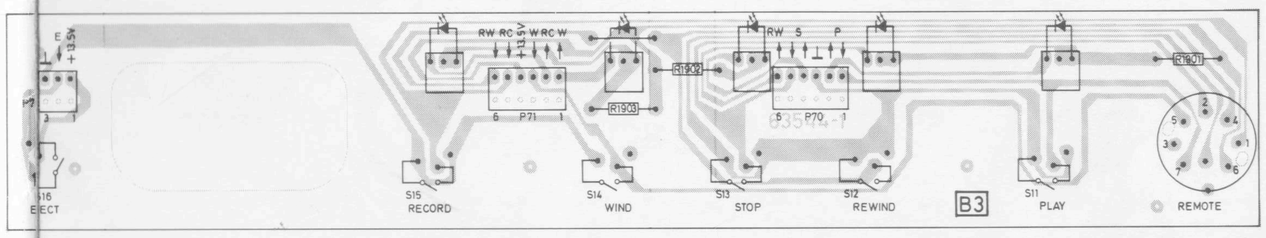


B3 FUNCTION CONTROL



1710 - 10 - 79 Part No. 714128
Printed in Norway by Reclamo A/S