SCHEMATIC DIAGRAM

TASCAM

TEAC Production Products

244

PORTASTUDIO

www.hifiengine.com

TASCAM 244 RECORD AMPL./PLAYBACK AMPL. SCHEMATIC DIAGRAM

TEAC Production Products

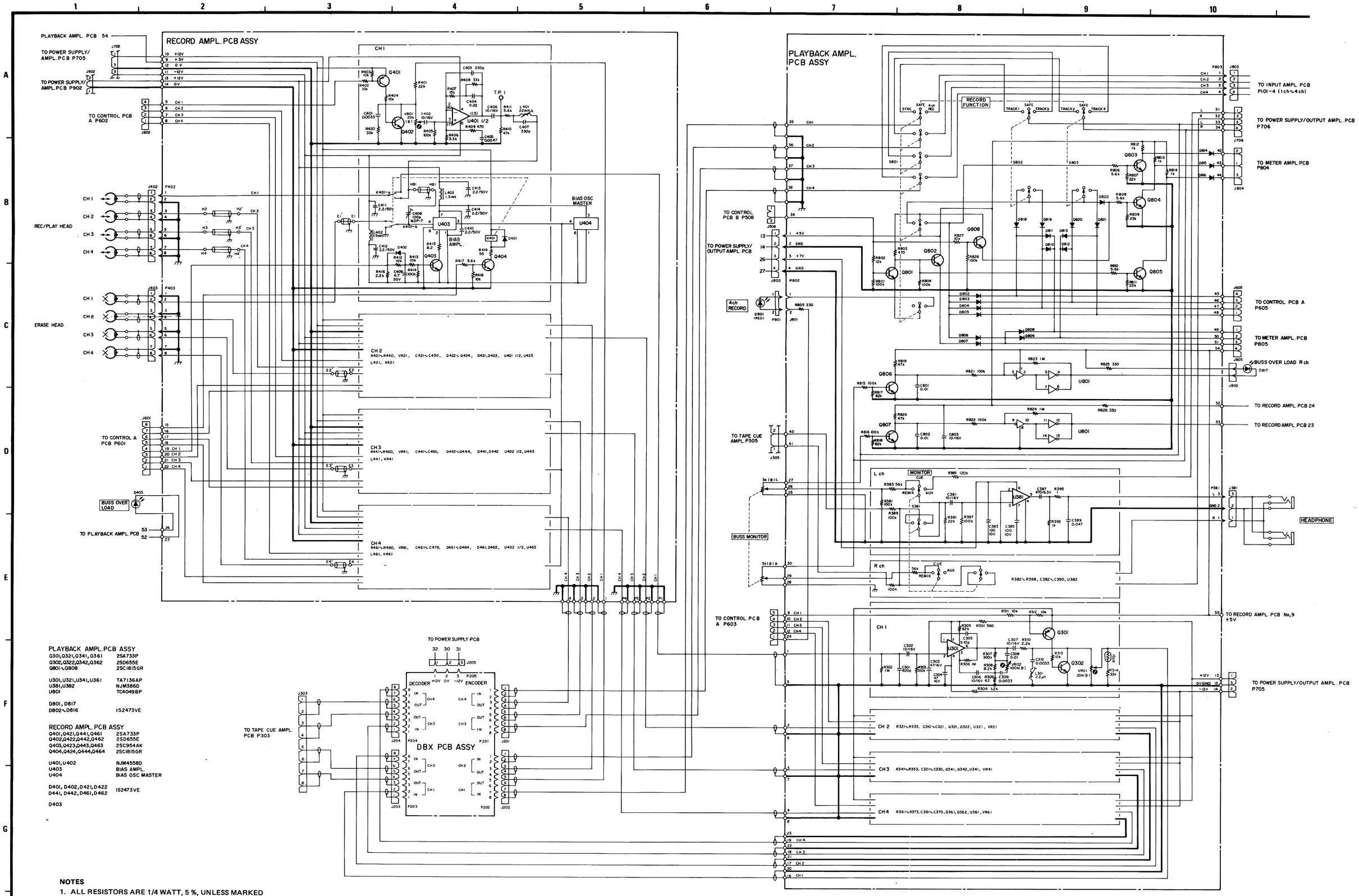

PLAYBACK AMPL. PCB ASSY

Q301, Q321, Q341, Q361	2SA733P
Q302, Q322, Q342, Q362	2SD655E
Q801~Q808	2SC1815GR
U301, U321, U341, U361	TA7136AP
U381, U382	NJM386D
U801	TC4049BP
D801, D817	
D802~D816	IS2473VE

RECORD AMPL. PCB ASSY

Q401, Q421, Q441, Q461	2SA733P
Q402, Q422, Q442, Q462	2SD655E
Q403, Q423, Q443, Q463	2SC954AK
Q404, Q424, Q444, Q464	2SC1815GR
U401, U402	NJM4558D
U403	BIAS AMPL.
U404	BIAS OSC MASTER
D401, D402, D421, D422 D441, D442, D461, D462	IS2473VE
D403	

NOTES

1. ALL RESISTORS ARE 1/4 WATT, 5 %, UNLESS MARKED OTHEWISE. RESISTOR VALUES ARE IN OHMS (k = 1,000 OHMS, M = 1,000,000 OHMS).
2. ALL CAPACITOR VALUES ARE IN MICROFARADS (p = PICOFARADS).
3. SCHEMATIC DIAGRAM SHOWN FOR ONE CHANNEL EXCEPT FOR SOME OF THE COMPONENTS.
4. ⚠ PARTS MARKED WITH THIS SIGN ARE SAFETY CRITICAL COMPONENTS. THEY MUST ALWAYS BE REPLACED WITH IDENTICAL COMPONENTS — REFER TO THE TEAC PARTS LIST AND ENSURE EXACT REPLACEMENT.

PORTASTUDIO 244

TASCAM 244

TEAC Production Products

INPUT AMPL./TAPE CUE AMPL. SCHEMATIC DIAGRAM

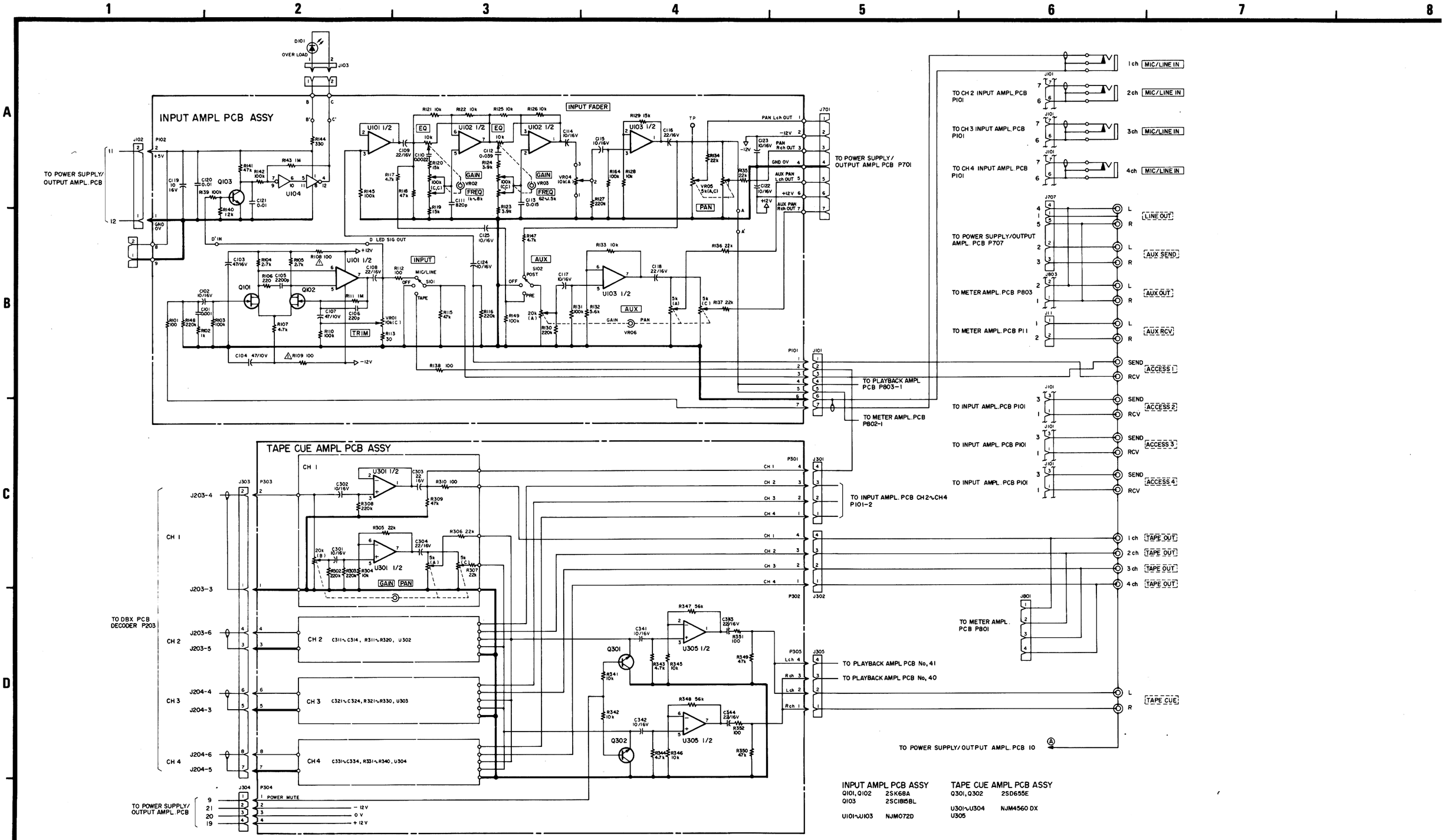

INPUT AMPL PCB ASSY		TAPE CUE AMPL PCB ASSY	
Q101, Q102	2SK68A	Q301, Q302	2SD655E
Q103	2SC1815BL	U301∿U304	NJM4560 DX
U101∿U103	NJM072D	U305	

NOTES

1. ALL RESISTORS ARE 1/4 WATT, 5 %, UNLESS MARKED OTHEWISE. RESISTOR VALUES ARE IN OHMS (k = 1,000 OHMS, M = 1,000,000 OHMS).
2. ALL CAPACITOR VALUES ARE IN MICROFARADS (p = PICOFARADS).
3. SCHEMATIC DIAGRAM SHOWN FOR ONE CHANNEL EXCEPT FOR SOME OF THE COMPONENTS.
4. ⚠ PARTS MARKED WITH THIS SIGN ARE SAFETY CRITICAL COMPONENTS. THEY MUST ALWAYS BE REPLACED WITH IDENTICAL COMPONENTS – REFER TO THE TEAC PARTS LIST AND ENSURE EXACT REPLACEMENT.

TASCAM 244

TEAC Production Products

DBX AMPL. SCHEMATIC DIAGRAM

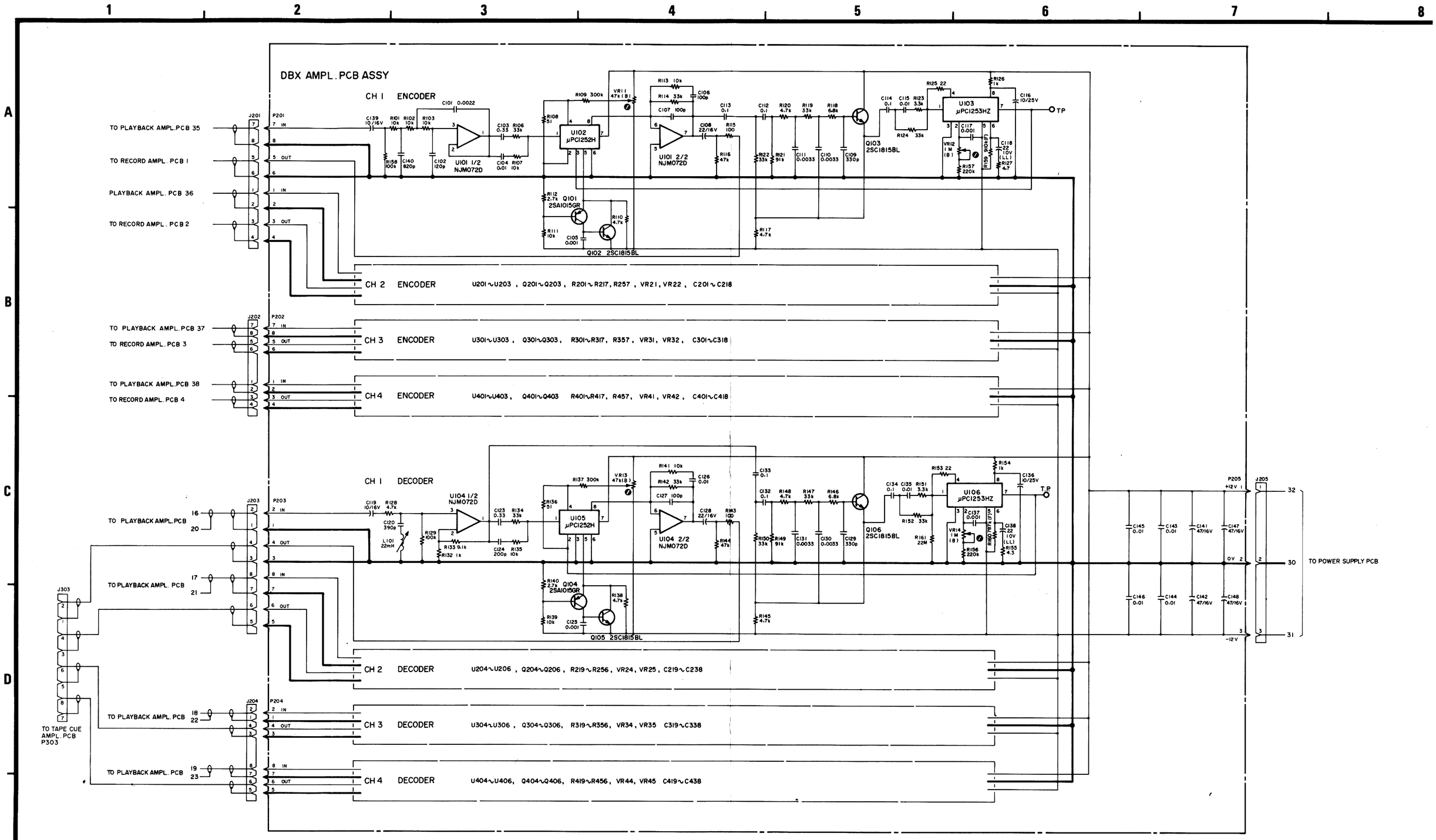

NOTES

1. ALL RESISTORS ARE 1/4 WATT, 5 %, UNLESS MARKED OTHEWISE. RESISTOR VALUES ARE IN OHMS (k = 1,000 OHMS, M = 1,000,000 OHMS).
2. ALL CAPACITOR VALUES ARE IN MICROFARADS (p = PICOFARADS).
3. SCHEMATIC DIAGRAM SHOWN FOR ONE CHANNEL EXCEPT FOR SOME OF THE COMPONENTS.
4. ⚠ PARTS MARKED WITH THIS SIGN ARE SAFETY CRITICAL COMPONENTS. THEY MUST ALWAYS BE REPLACED WITH IDENTICAL COMPONENTS – REFER TO THE TEAC PARTS LIST AND ENSURE EXACT REPLACEMENT.

PORTASTUDIO 244

TASCAM 244

TEAC Production Products

METER AMPL. SCHEMATIC DIAGRAM

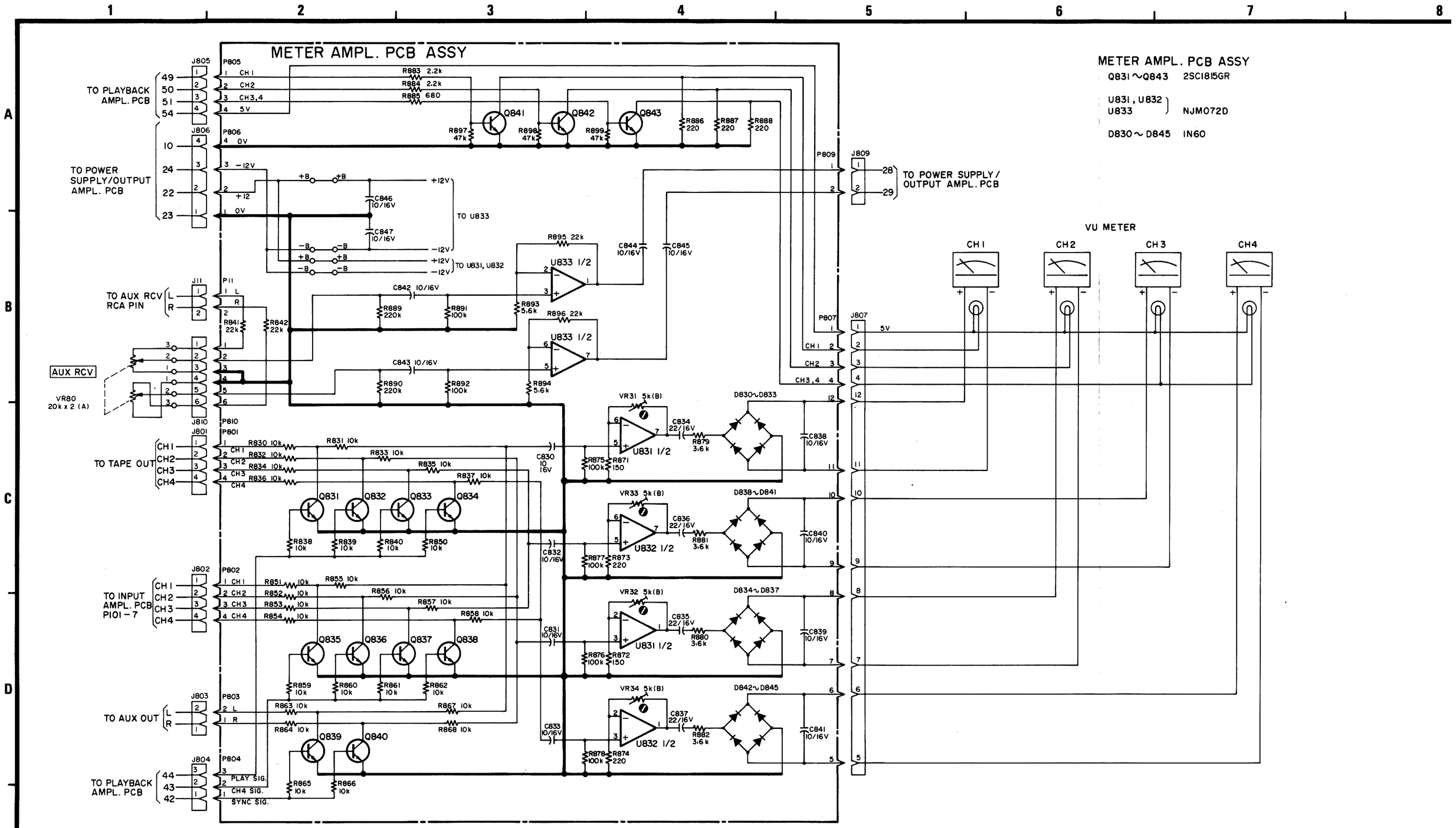

METER AMPL. PCB ASSY

Q831 ~ Q843	2SC1815GR
U831, U832, U833	NJM072D
D830 ~ D845	IN60

NOTES

1. ALL RESISTORS ARE 1/4 WATT, 5 %, UNLESS MARKED OTHEWISE. RESISTOR VALUES ARE IN OHMS (k = 1,000 OHMS, M = 1,000,000 OHMS).
2. ALL CAPACITOR VALUES ARE IN MICROFARADS (p = PICOFARADS).
3. ⚠ PARTS MARKED WITH THIS SIGN ARE SAFETY CRITICAL COMPONENTS. THEY MUST ALWAYS BE REPLACED WITH IDENTICAL COMPONENTS – REFER TO THE TEAC PARTS LIST AND ENSURE EXACT REPLACEMENT.

TASCAM 244 CONTROL A SCHEMATIC DIAGRAM

TEAC Production Products

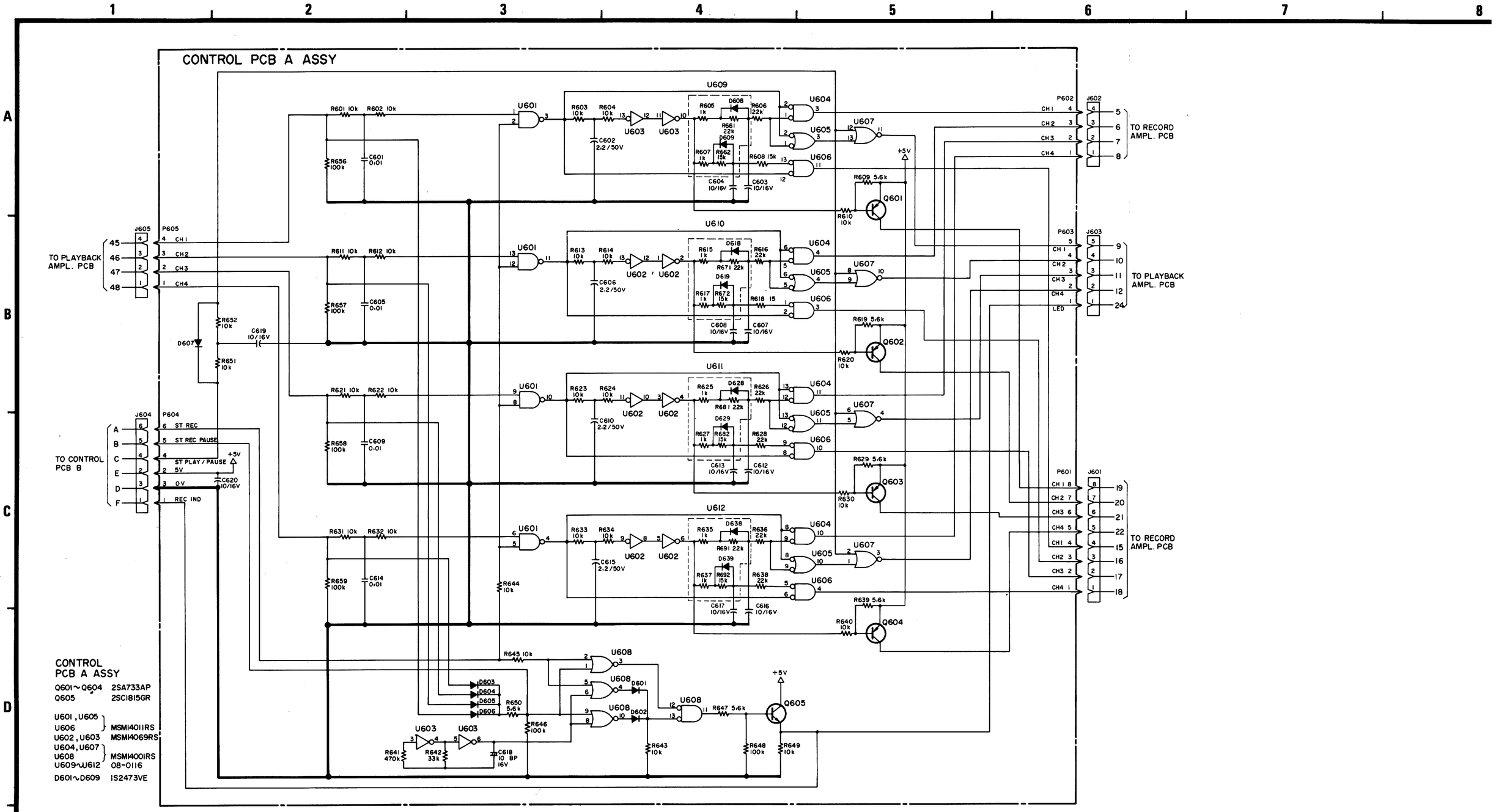

NOTES

1. ALL RESISTORS ARE 1/4 WATT, 5 %, UNLESS MARKED OTHEWISE. RESISTOR VALUES ARE IN OHMS (k = 1,000 OHMS, M = 1,000,000 OHMS).
2. ALL CAPACITOR VALUES ARE IN MICROFARADS (p = PICOFARADS).
3. ⚠ PARTS MARKED WITH THIS SIGN ARE SAFETY CRITICAL COMPONENTS. THEY MUST ALWAYS BE REPLACED WITH IDENTICAL COMPONENTS – REFER TO THE TEAC PARTS LIST AND ENSURE EXACT REPLACEMENT.

TASCAM 244

TEAC Production Products

CONTROL B SCHEMATIC DIAGRAM

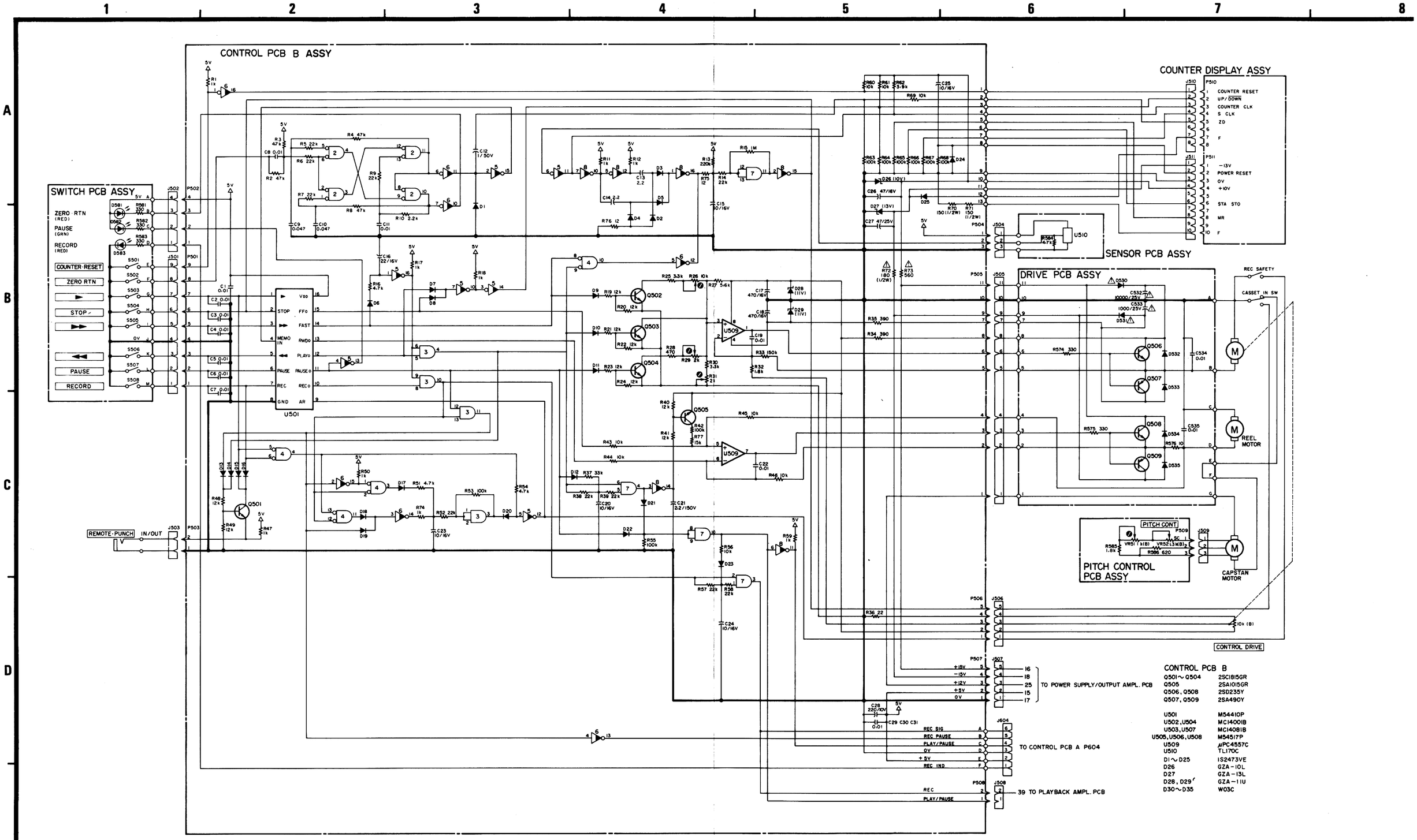

CONTROL PCB B	
Q501～Q504	2SC1815GR
Q505	2SA1015GR
Q506, Q508	2SD235Y
Q507, Q509	2SA490Y
U501	M54410P
U502, U504	MC14001B
U503, U507	MC14081B
U505, U506, U508	M54517P
U509	μPC4557C
U510	TL170C
D1～D25	1S2473VE
D26	GZA-10L
D27	GZA-13L
D28, D29	GZA-11U
D30～D35	W03C

NOTES

1. ALL RESISTORS ARE 1/4 WATT, 5 %, UNLESS MARKED OTHEWISE. RESISTOR VALUES ARE IN OHMS (k = 1,000 OHMS, M = 1,000,000 OHMS).
2. ALL CAPACITOR VALUES ARE IN MICROFARADS (p = PICOFARADS).
3. ⚠ PARTS MARKED WITH THIS SIGN ARE SAFETY CRITICAL COMPONENTS. THEY MUST ALWAYS BE REPLACED WITH IDENTICAL COMPONENTS – REFER TO THE TEAC PARTS LIST AND ENSURE EXACT REPLACEMENT.

PORTASTUDIO 244

TASCAM 244 POWER SUPPLY/OUTPUT AMPL. SCHEMATIC DIAGRAM

TEAC Production Products

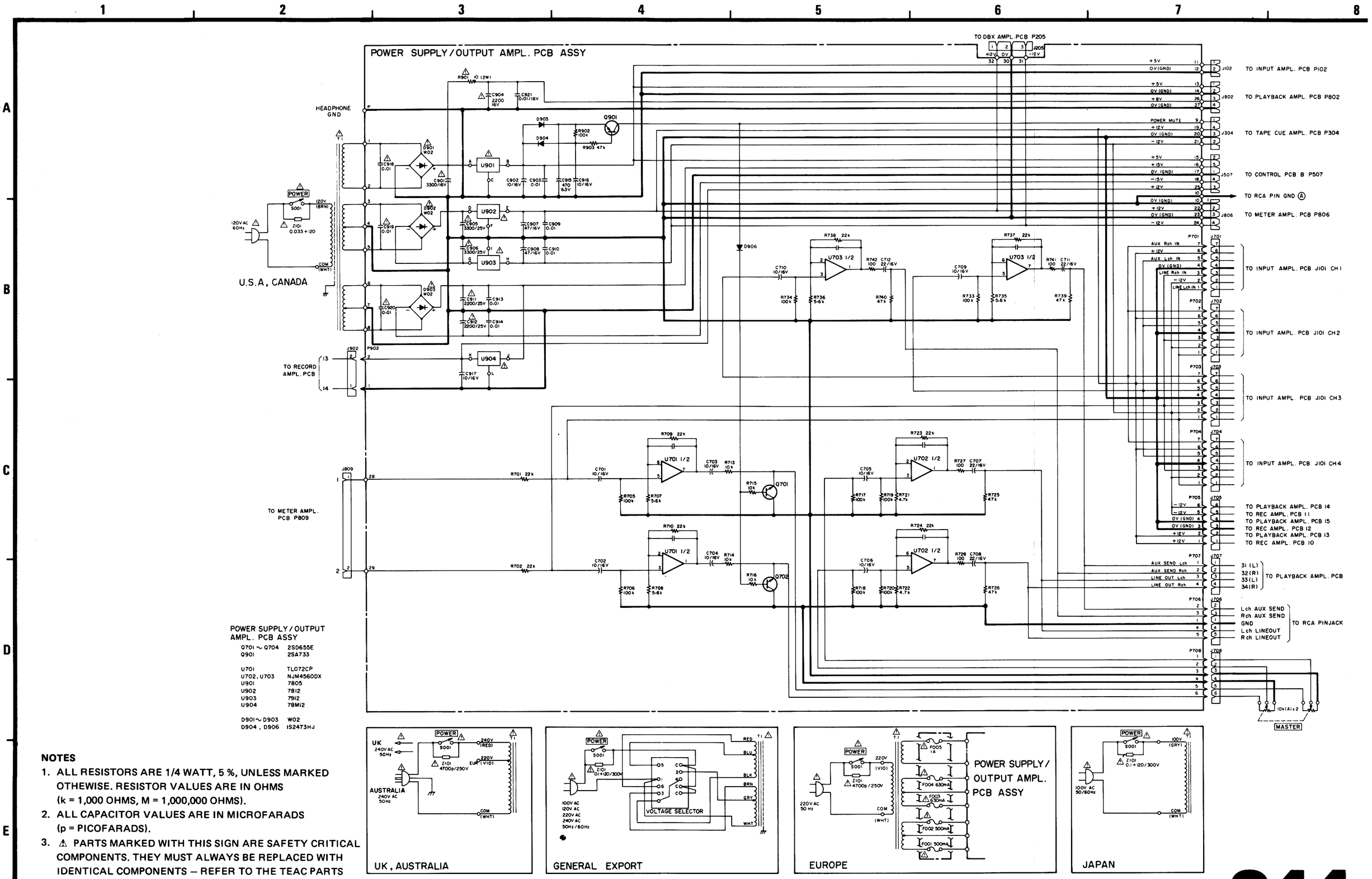

POWER SUPPLY/OUTPUT AMPL. PCB ASSY

Q701 ~ Q704	2SD655E
Q901	2SA733
U701	TL072CP
U702, U703	NJM4560DX
U901	7805
U902	7812
U903	7912
U904	78M12
D901 ~ D903	W02
D904, D906	IS2473HJ

NOTES

1. ALL RESISTORS ARE 1/4 WATT, 5 %, UNLESS MARKED OTHEWISE. RESISTOR VALUES ARE IN OHMS (k = 1,000 OHMS, M = 1,000,000 OHMS).
2. ALL CAPACITOR VALUES ARE IN MICROFARADS (p = PICOFARADS).
3. ⚠ PARTS MARKED WITH THIS SIGN ARE SAFETY CRITICAL COMPONENTS. THEY MUST ALWAYS BE REPLACED WITH IDENTICAL COMPONENTS – REFER TO THE TEAC PARTS LIST AND ENSURE EXACT REPLACEMENT.

PORTASTUDIO 244