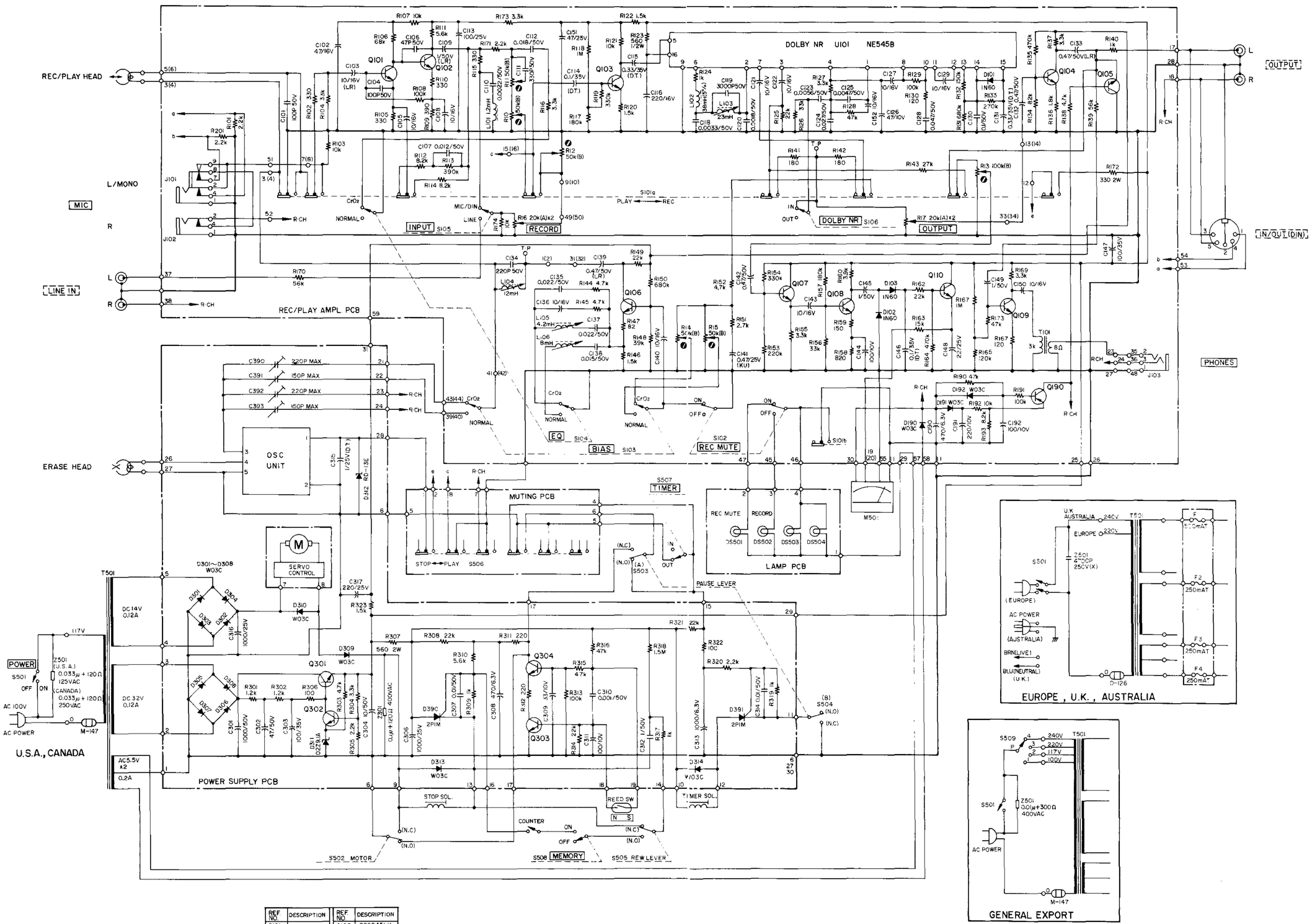

REF. NO.	DESCRIPTION	REF. NO.	DESCRIPTION
Q101 Q201	2SC900UA	Q108 Q208	2SC945LK or 2SC828(S)
Q102 Q202	2SC900UA	Q109 Q209	2SC945LK
Q103 Q203	2SC900UA	Q110 Q210	2SC1636-1
Q104 Q204	2SC945LK	Q190	2SA750E
Q105 Q205	2SC1636-1	Q301	2SD288K
Q106 Q206	2SC945LK	Q302	2SC945LK or 2SC828(S)
Q107 Q207	2SC945LK or 2SC828(S)	Q303 Q304	2SC945LK or 2SC828(S)

NOTES

1. ALL RESISTORS ARE ¼ WATT, 5%, UNLESS MARKED OTHERWISE
   RESISTOR VALUES ARE IN OHMS (k=1,000 OHMS, M=1,000,000 OHMS).
2. ALL CAPACITOR VALUES ARE IN MICROFARADS (p=PICOFARADS).

REVISION	DATE	CHANGE NO.
6		
5		
4		
3		
2		
1	05·77	

STEREO CASSETTE DECK

MODEL NO. **A-303** SHEET NO.

TEAC CORPORATION

www.hifiengine.com