TEAC®

A-350 WITH DOLBY N.R.

STEREO CASSETTE DECK

SERIAL NO.27790 AND BEFORE

SERVICE MANUAL

ALSO APPLICABLE FOR
A-110/120 AND A-330.

51030431D

www.hifiengine.com

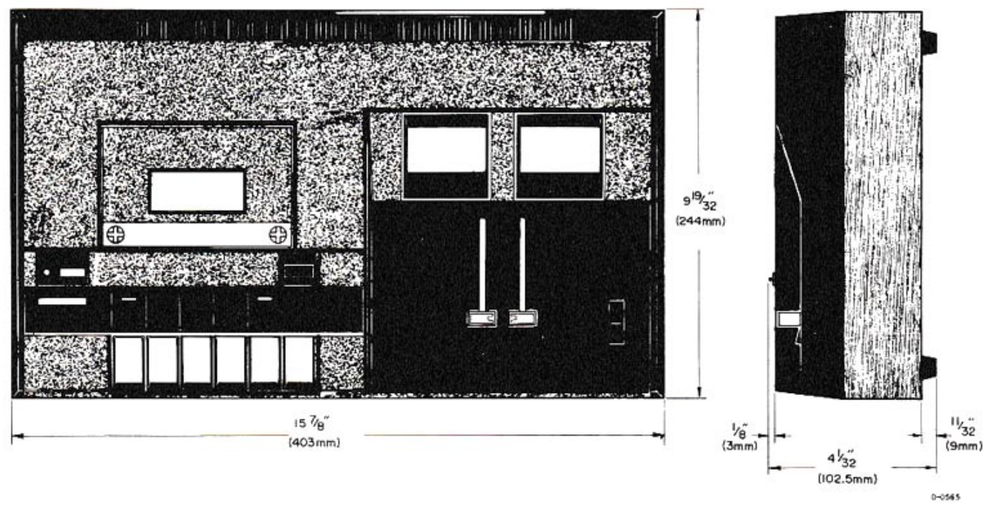

A — 110/120

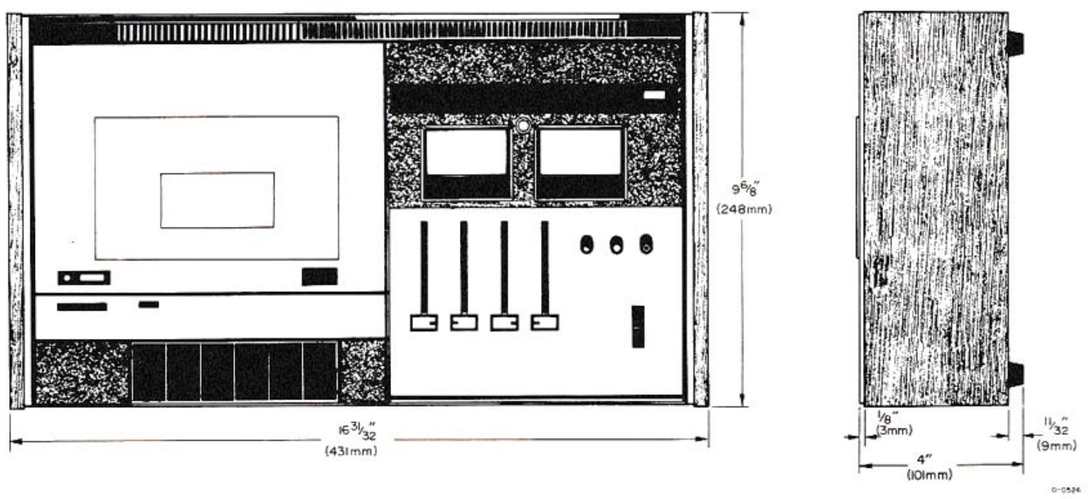

A — 330/350

Dimensions

www.hifiengine.com

EQUIPMENT REQUIRED

The following special equipment is required to perform measurements and adjustments.
For undesignated equipment, those normally used will be adequate.

TEAC TEST TAPE:

MTT-501HF and CHROMIUM DIOXIDE TAPE
for record test
MTT-116L or 117 for playback test
MTT-111 for tape speed/flutter test

NOTE
Due to the differences of sensitivity in recording tapes, use of the TEAC recording test tape MTT-501 is recommended for the record performance and adjustment checks.

TEAC TEST SET:

NOTE
Use of the TEAC M-826A test set is recommended, this set incorporates a level meter, audio oscillator, channel selecting switch, variable attenuator and monitor speaker. TEAC M-826A measures the RMS value of the voltage(0dB=0.775V) characteristics of this test set are similar to the standard VU-meter.

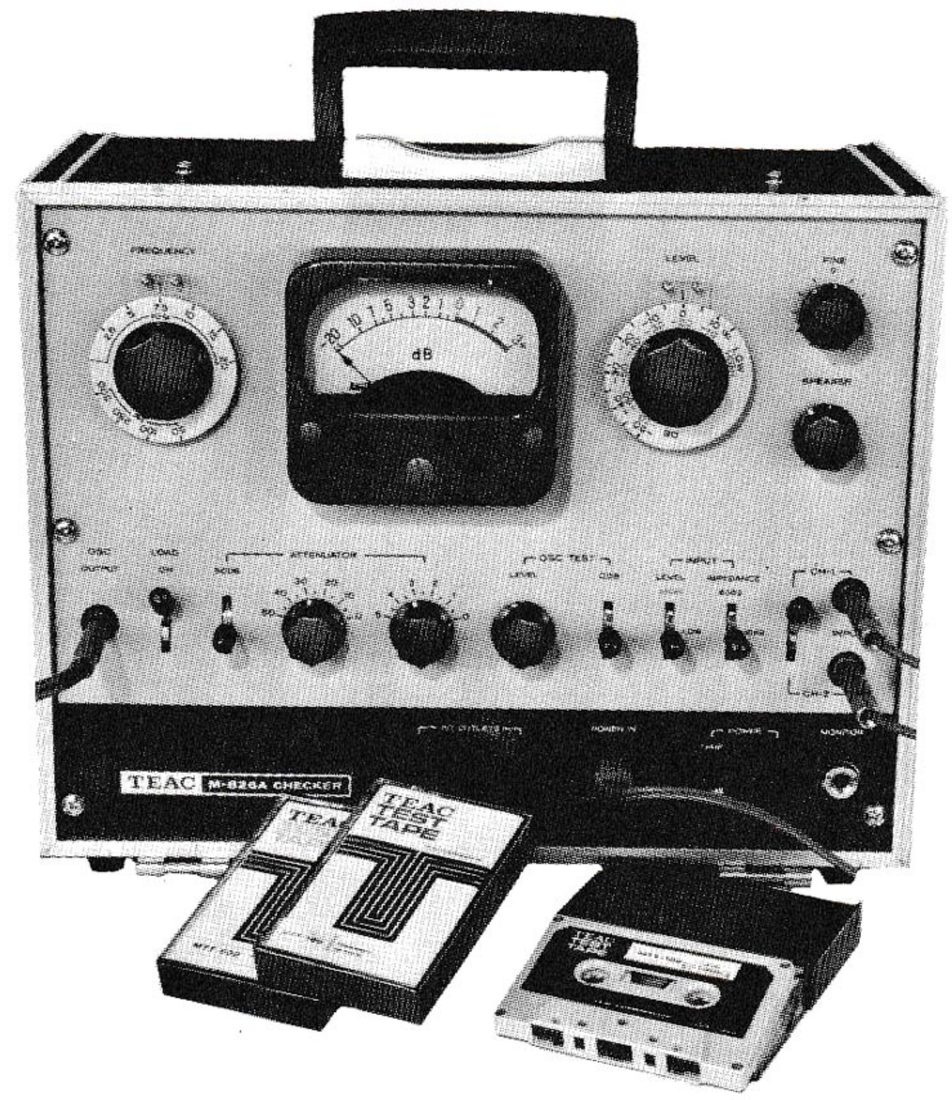

TEST TAPE & TEST SET

AC VTVM:	GENERAL
TENSION GAUGE:	0∿70 gram
	0∿150 gram
SPRING SCALE:	0∿500 gram
FREQ. COUNTER:	Capable of 0 to 5kHz indication
FLUTTER METER:	MEGURO Model 665B

TEAC E-1

TEAC E-2

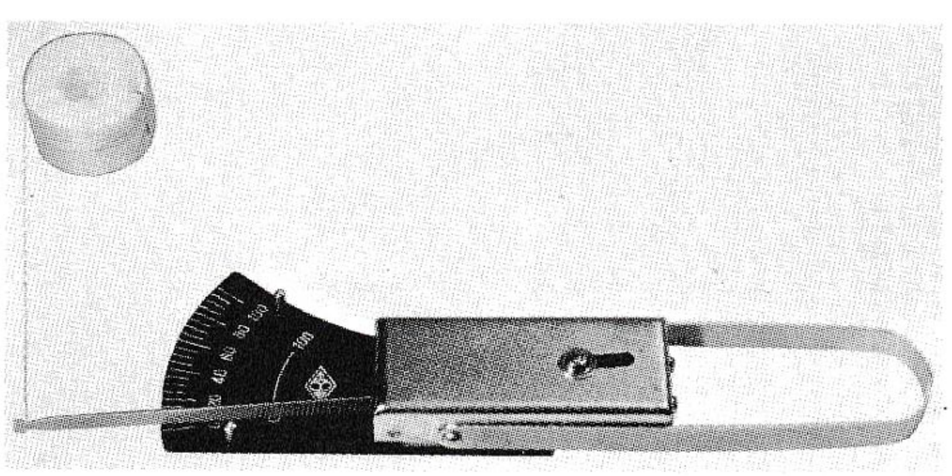

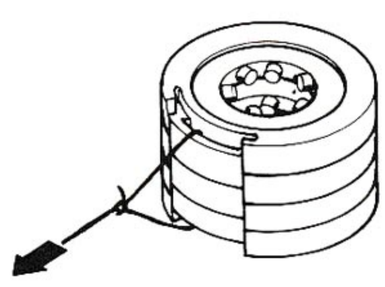
TENSION GAUGE & ADAPTER

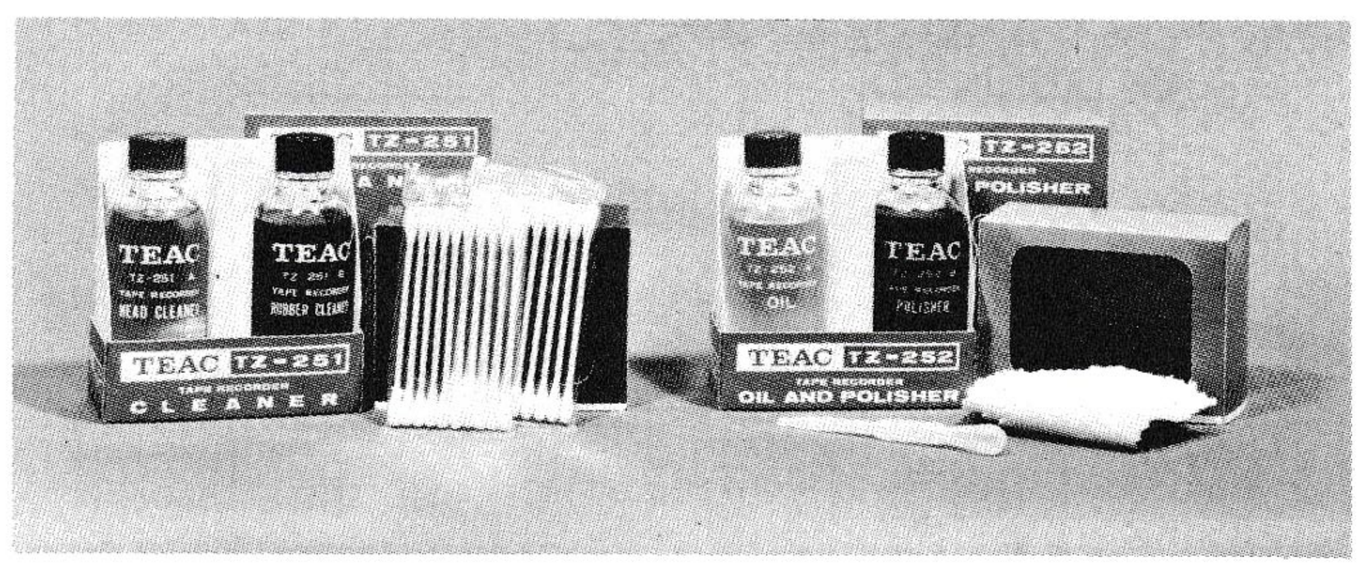

MAINTENANCE EQUIPMENTS

www.hifiengine.com

COMPONENTS LOCATION

BOTTOM VIEW

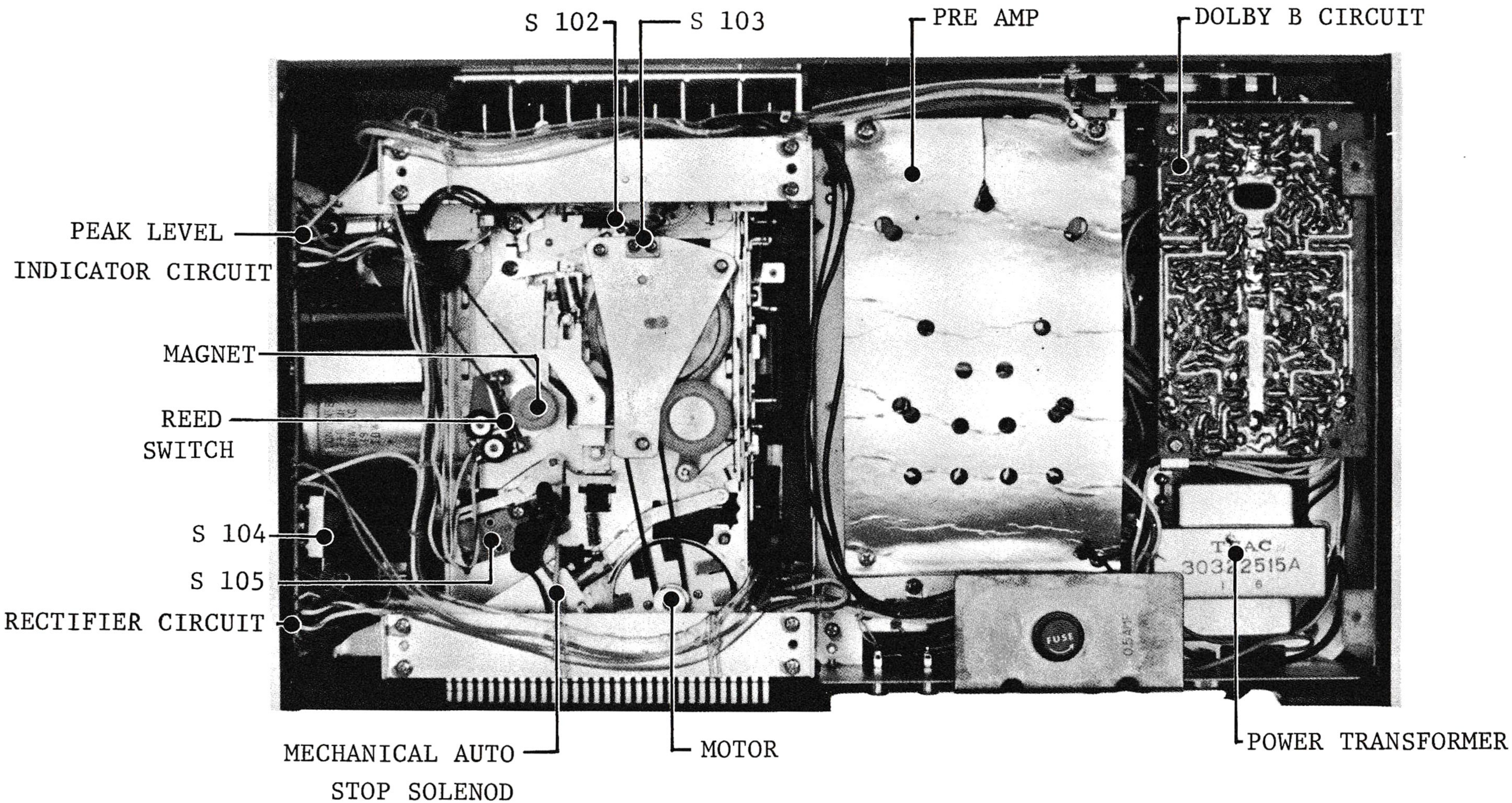

PARTIAL DISASSEMBLY

CASE REMOVAL

1. Disconnect all cables from the unit.
2. Remove control knobs by lifting upward.
3. Invert the unit.

NOTE

To avoid possible damage to tape run lens it is suggest that unit be placed, inverted, on a soft mat.

4. Remove the six screws securing the bottom cover, carefully lift off the bottom cover.

NOTE

All amplifier checks and adjustments can be made from the bottom with the bottom cover removed.

5. Fold the voltage selector away from the chassis.
6. Remove the six screws holding the top cover to the chassis. Disconnect peak level indicator from circuit by removing 2 Phillips head screws (330/350 only). Lift chassis from top cover.

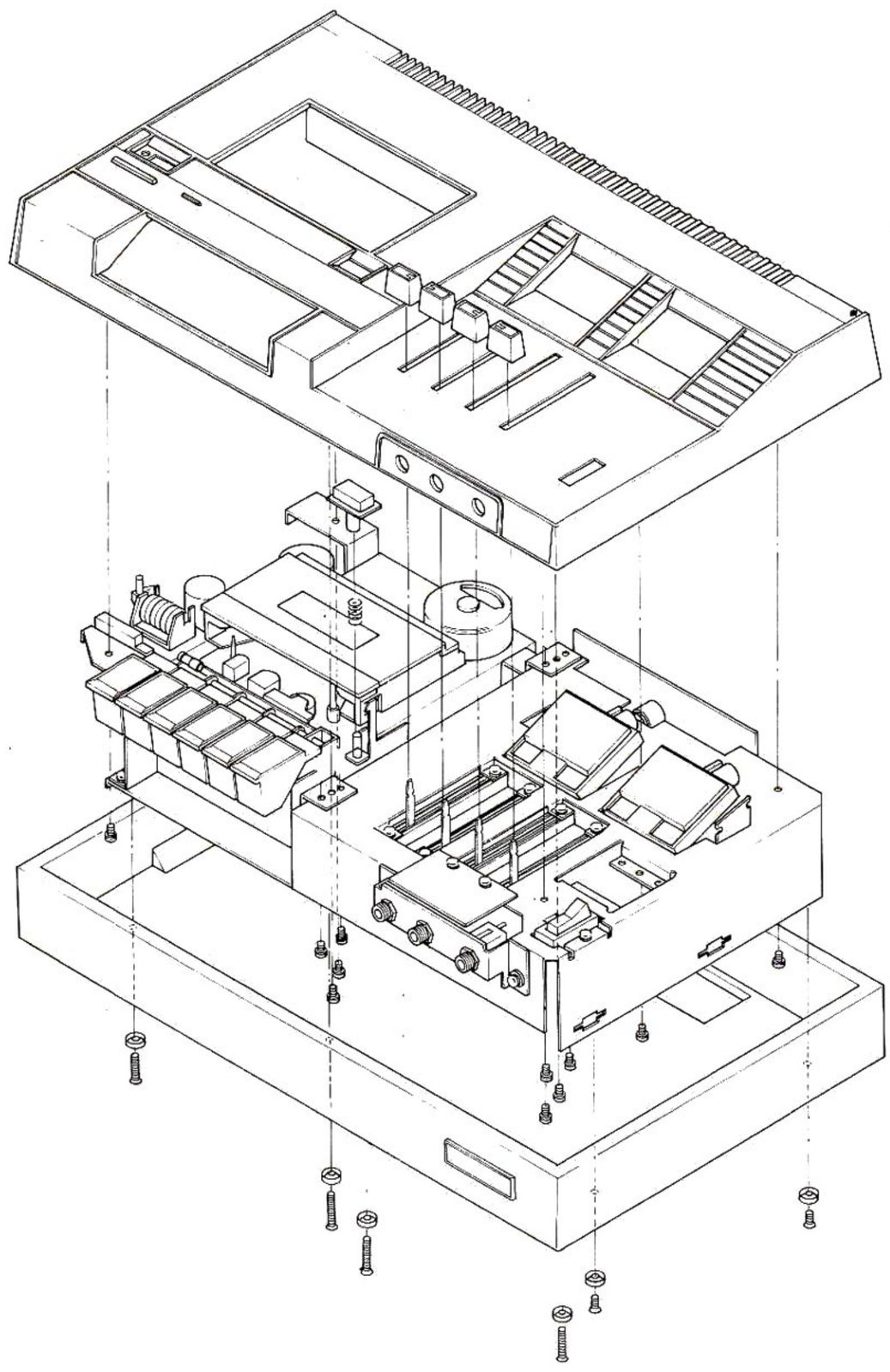

CASE REMOVAL

NOTE

Note the proper position of the eject button and eject lever. When replacing the cover, the eject lever must be forward or cassette compartment will not open. See illustration below. The eject button can be installed 180° from its proper position. If installed in this manner compartment will not open.

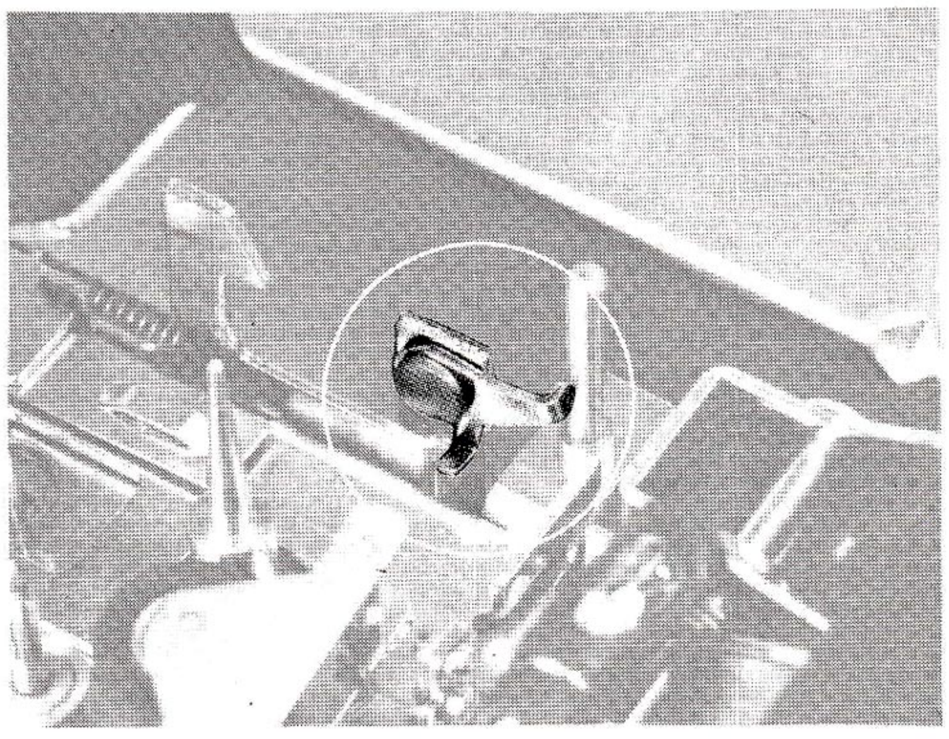

EJECT LEVER (110/120 only)

www.hifiengine.com

PARTIAL DISASSEMBLY

CASE REMOVAL

1. Disconnect all cables from the unit.
2. Remove control knobs by lifting upward.
3. Invert the unit.

NOTE

To avoid possible damage to tape run lens it is suggest that unit be placed, inverted, on a soft mat.

4. Remove the six screws securing the bottom cover, carefully lift off the bottom cover.

NOTE

All amplifier checks and adjustments can be made from the bottom with the bottom cover removed.

5. Fold the voltage selector away from the chassis.
6. Remove the six screws holding the top cover to the chassis. Disconnect peak level indicator from circuit by removing 2 Phillips head screws (330/350 only). Lift chassis from top cover.

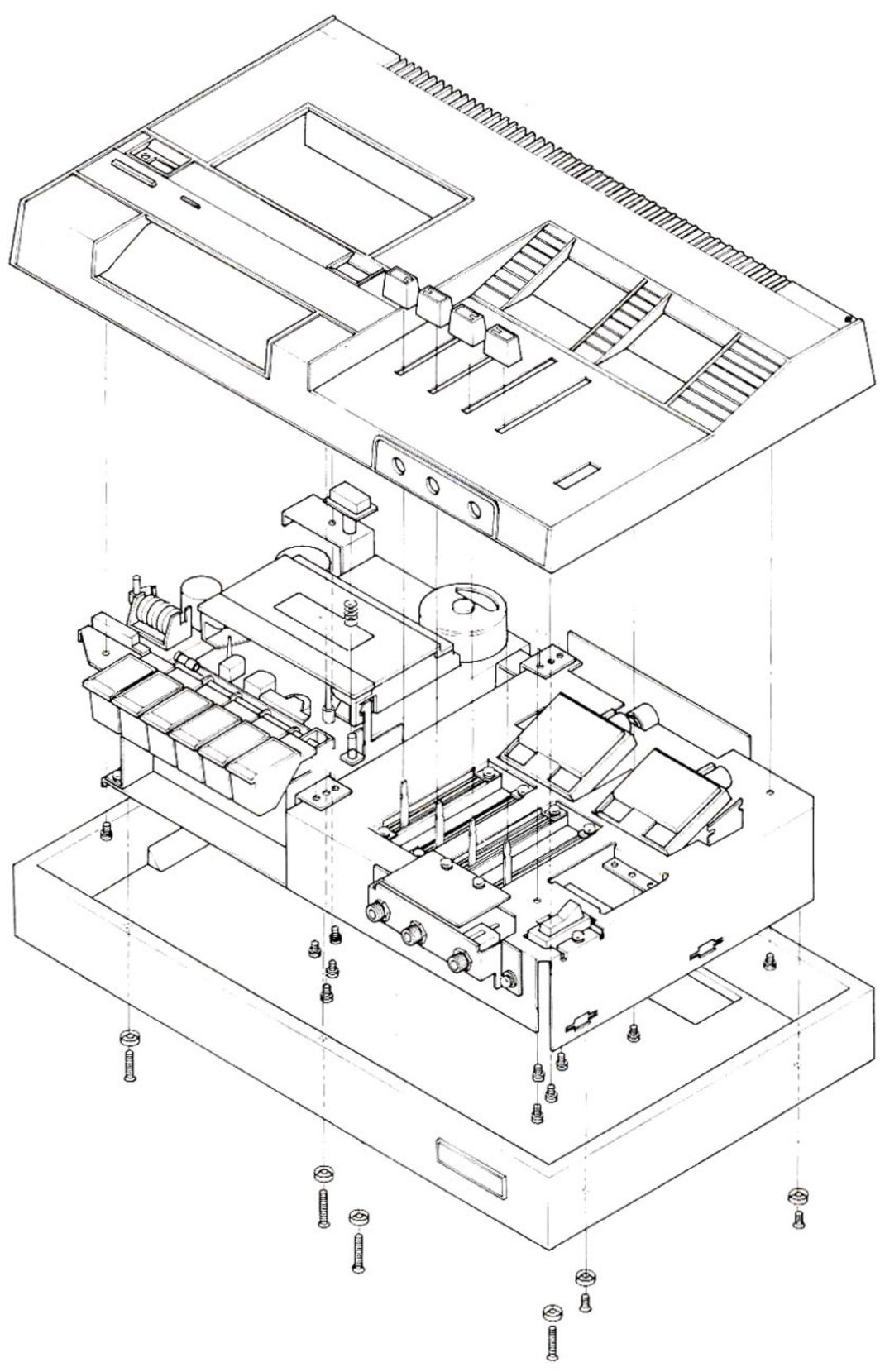

CASE REMOVAL

NOTE

Note the proper position of the eject button and eject lever. When replacing the cover, the eject lever must be forward or cassette compartment will not open. See illustration below. The eject button can be installed 180° from its proper position. If installed in this manner compartment will not open.

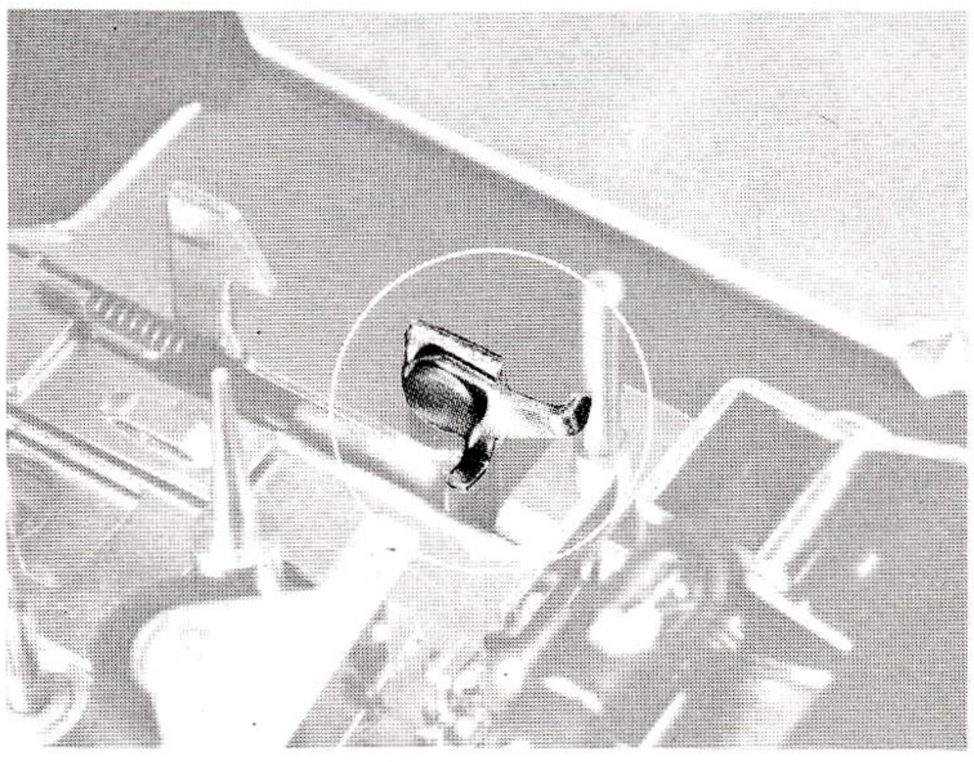

EJECT LEVER (110/120 only)

www.hifiengine.com

DISASSEMBLY PRECAUTION

- Clean all disassembled parts.
- Use the right tools. Demagnetize the tools before use.
- Place the disassembled parts in order of disassembly.
- Do not reuse the E ring. Use a new one when reassembling.
- Do not attempt parts disassembly beyond that shown in the disassembly drawing which clearly indicates such limits.
- To prevent loosening due to vibration, apply "LOCTITE" to all tightened screws.
- Do not attempt partial adjustment of the factory adjusted assemblies.
- When mounting or removing a spring, pay heed to the position (direction) of the hook. The wrong position may result in a change in the tension.

www.hifiengine.com

CASSETTE HOLDER

NOTE

Cassette holder must be removed to perform mechanical checks and adjustments. Remove as outlined below. Carefully note the positions of all cassette holder components before attempting disassembly.

1. Release tension of both cassette holder shaft springs by releasing spring ends from chassis slots.

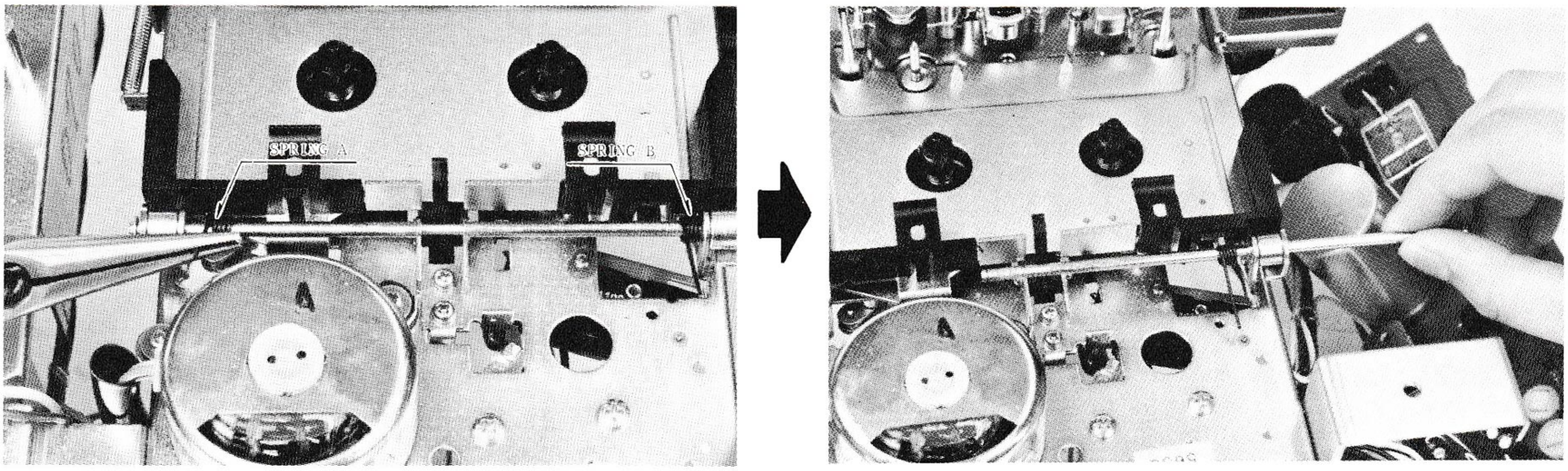

CASSETTE HOLDER REMOVAL

2. Remove the E clip from right end of holder shaft.
3. While holding assembly in position, slide the shaft from the holder assembly. To reassemble, reverse the procedures. See illustration.

NOTE

Holder shaft springs differ, be sure to place the stronger spring at the left end of the shaft (holder viewed from front).

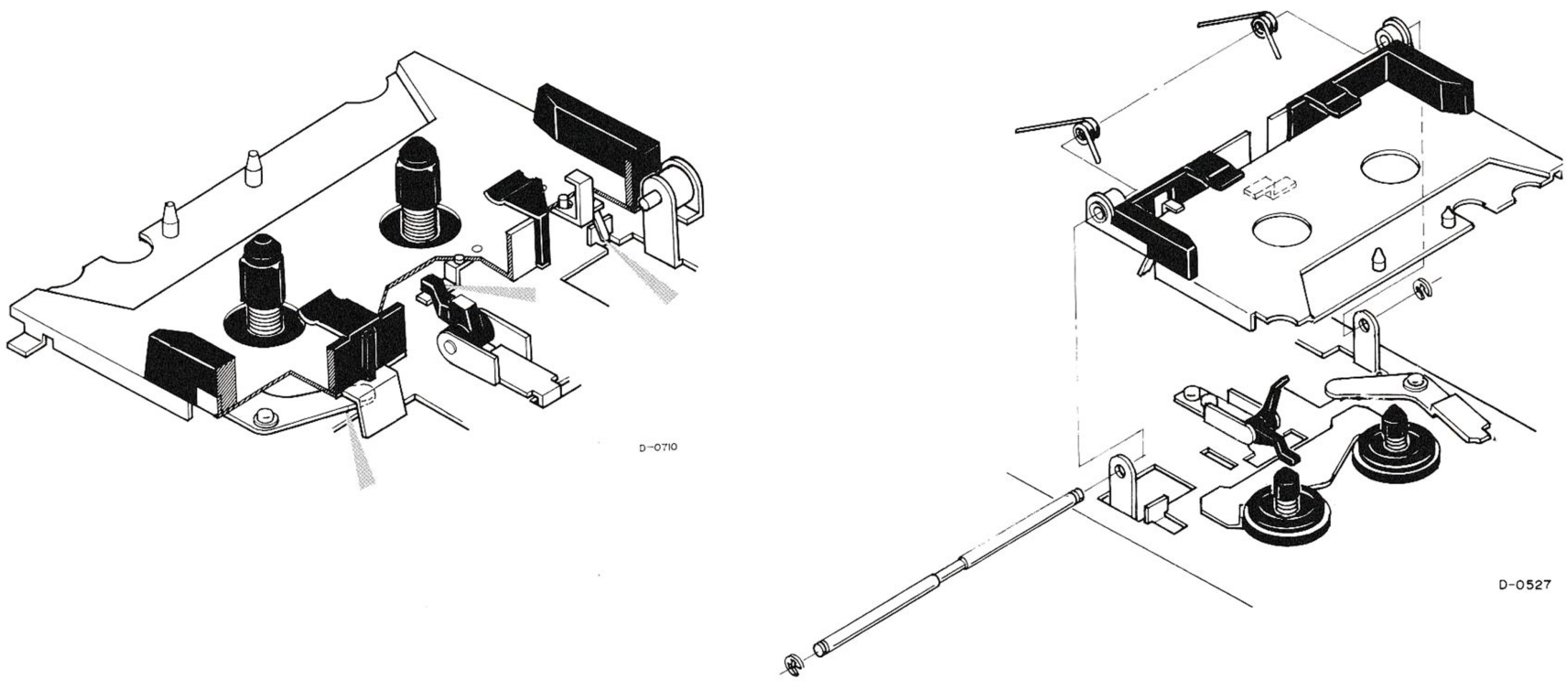

CASSETTE HOLDER -EXPLODED VIEW-

www.hifiengine.com

MOTOR REMOVAL

Unsolder the three motor wires noting their positions. Remove the 3 nuts and 2 screws securing the motor (underside of chassis). Remove three motor retaining screws (above chassis).

NOTE

On later production models, motor is secured by three screws only, atop the chassis.

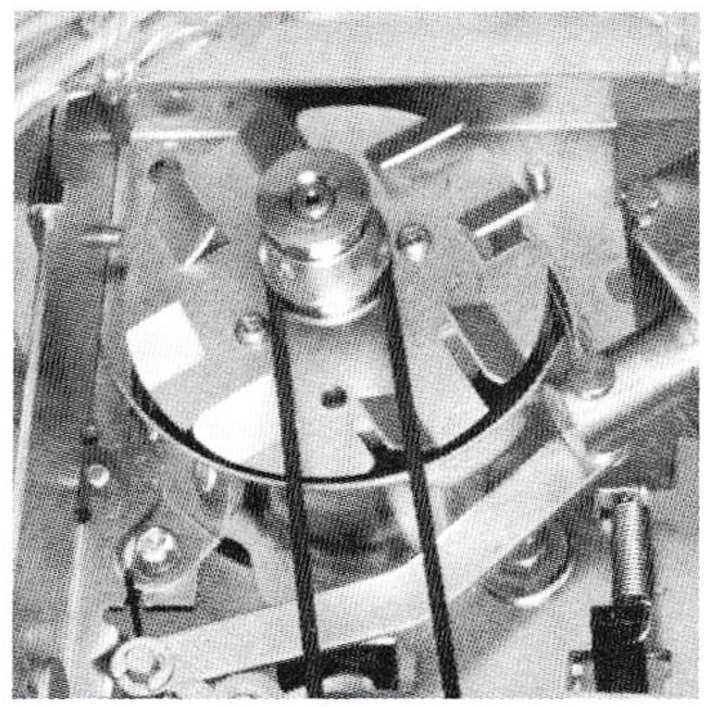

MOTOR

MOTOR PULLEY

The motor pulley has two steps, large diameter step is for 50 Hz operation, smaller step is for 60 Hz operation. To change operating frequency loosen the 2 screws in the pulley and invert the pulley on the motor shaft. After reinstalling pulley check the positioning on the shaft, proper position is shown in the diagram. Improper positioning of the drive pulley will result in increased wow and flutter.

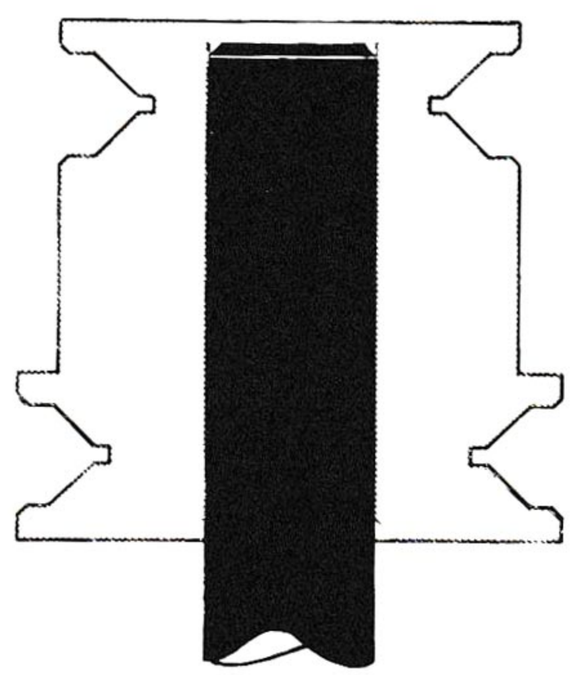

MOTOR PULLEY POSITIONING

DRIVE BELT

The drive belt has 2 dull and 2 shiny(drive) surfaces. Make certain that the shiny surfaces are in contact with the drive pulley and flywheel. If belt is inverted wow and flutter will increase and tape speed will be affected.

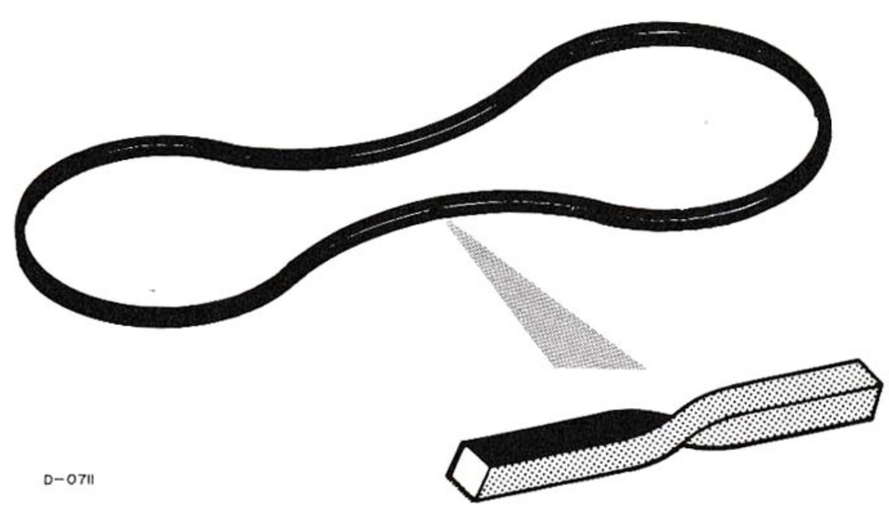

DRIVE BELT

www.hifiengine.com

PUSH BUTTON ASSY REMOVAL

1. Set all push buttons to neutral mode.
2. Remove three screws from underside of chassis.
3. Disconnect one end of the pause lever spring.
4. Remove the lamp holder retaining nut.
5. Carefully lift the push button assy from the chassis.
6. Reverse the above procedures when replacing the assembly, after installation check for proper operation as per the following notes.

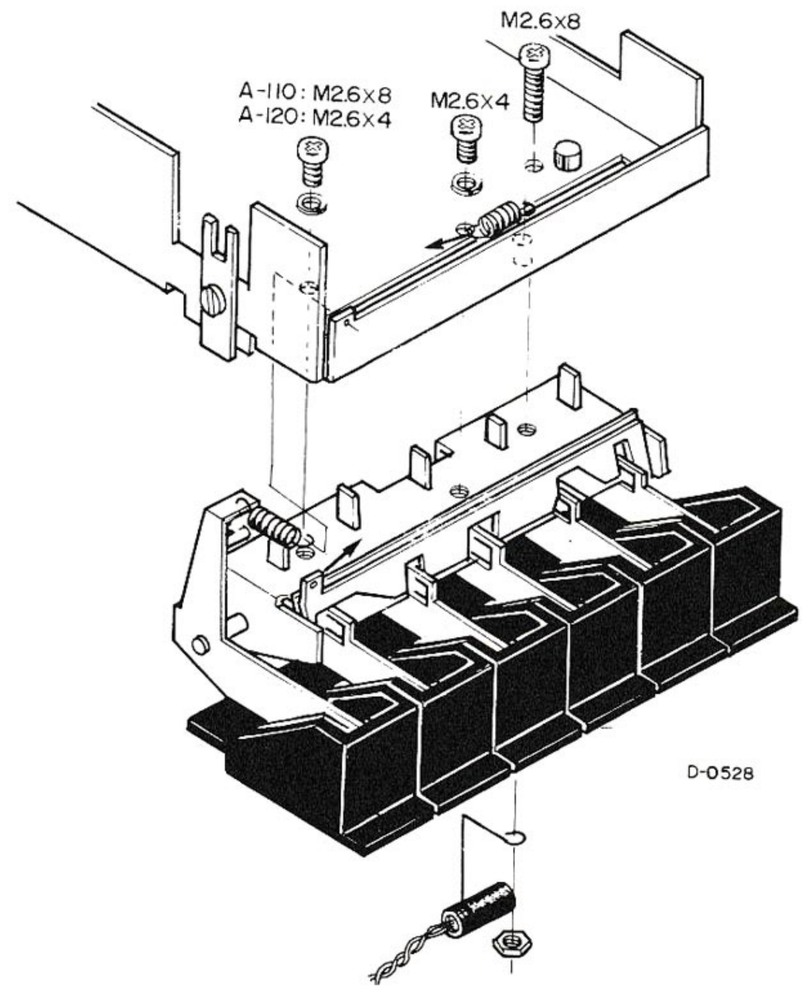

PUSH BUTTON ASSY

FAST FORWARD BUTTON

When depressed will remain engaged until released by the stop button. Fast forward button cannot be engaged from the play or rewind modes.

PLAY BUTTON

When depressed will remain engaged until released by the stop button. Play mode cannot be engaged from the fast forward or rewind modes.

REWIND BUTTON

When depressed will remain engaged until released by the stop button. Rewind cannot be engaged from fast forward or play modes.

RECORD BUTTON

Record and play buttons must be simultaneously depressed and will remain engaged provided a cassette tape is loaded. If cassette holder is empty or cassette safety tabs have been removed, record mode will not operate.

EJECT BUTTON

Depress eject button, cassette holder will open. When play button is depressed, eject button cannot be operated.

PAUSE BUTTON

Pause should operate in any function. If pause button will not remain engaged inspect the spring and pawl locking mechanism as illustrated below.

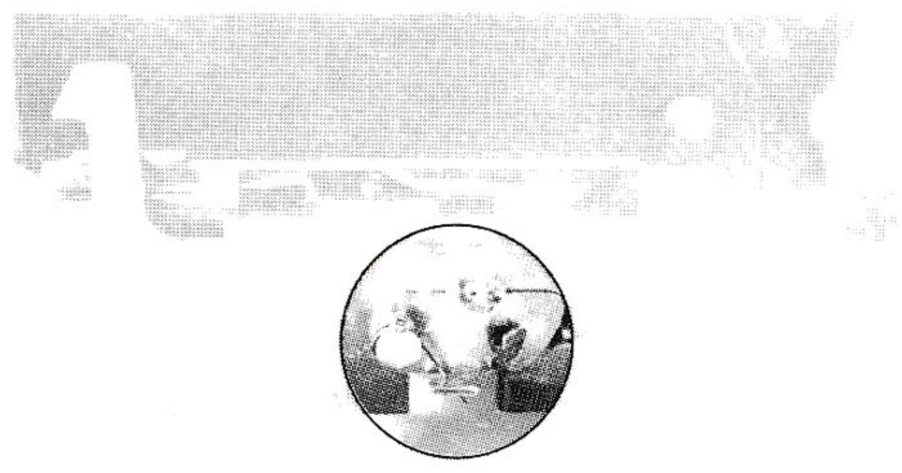

SPRING AND PAWL

STOP BUTTON

When stop button is depressed, all push buttons except pause should be released. Stop button should not remain depressed.

www.hifiengine.com

LEFT REEL TABLE ASSY

1. Loosen the 2 screws securing the magnet pulley assembly (below chassis).
2. Depress the (▶▶) button and lift off the left reel assembly.

RIGHT REEL TABLE ASSY

1. Remove reel shaft cap and nylon washer. Lift right reel table assy from shaft.

NOTE

Proper reel clearance(above chassis) for both reels are approximately 0.2 mm.

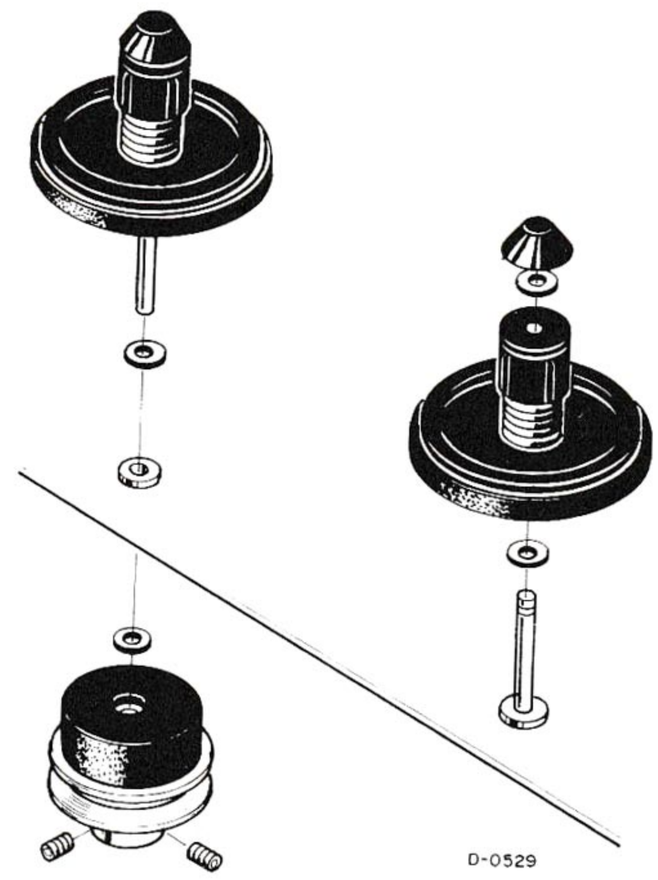

REEL TABLE ASSY

PINCH ROLLER ASSEMBLY REMOVAL

1. Remove the E clip and flat washer from pinch roller assembly shaft.
2. Retract pressure spring.
3. Lift the pinch roller assembly from the shaft.

HEAD REPLACEMENT

CAUTION

Remove AC power from the unit before removing heads to prevent accidental magnetization.

Record/Playback Head

1. Using a low heat soldering iron, disconnect the four wires after carefully noting their positions. Remove the screw at the right base of the head. Slide the head to the right until it is freed of the left screw and spring.
2. To replace, insert the cutout portion of the head mount under the left screw, atop the spring. Replace the right mounting screw. Resolder the wires using a minimum of heat.
3. After completing installation, a thorough demagnetization and head azimuth alignment is required.

Erase Head

1. Using a low heat soldering iron, disconnect the two wires from the head.
2. Remove the two screws securing the head mounting plate.
3. Reverse the above procedures to install the new head.

NOTE

Since the position of the erase head is fixed, no adjustment is required.

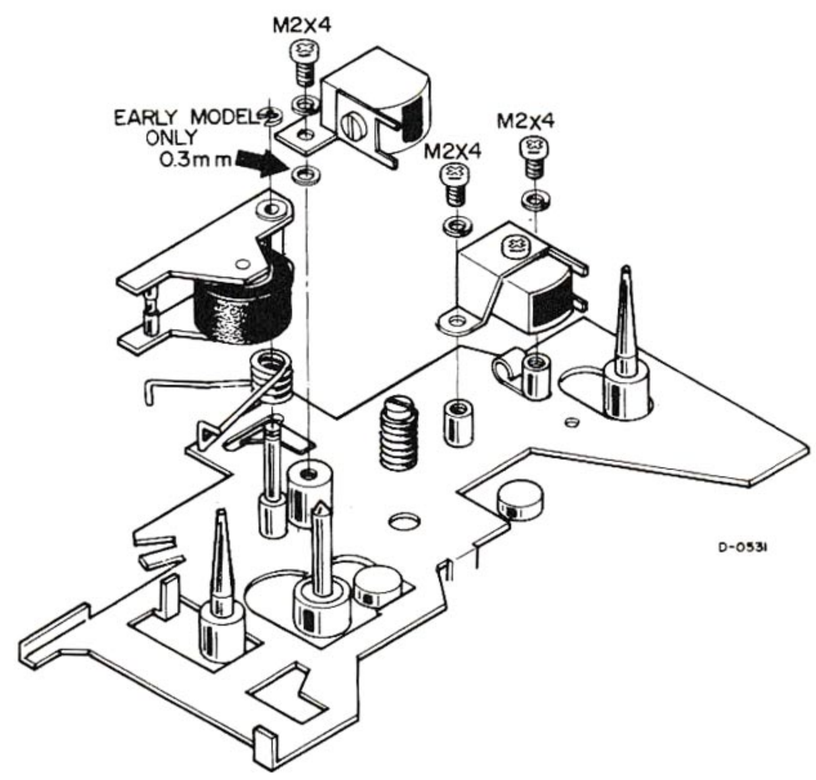

PINCH ROLLER AND HEADS DISASSEMBLY

www.hifiengine.com

MECHANICAL ADJUSTMENT CHECK

The TEAC cassette mechanism is designed to require a minimum of adjustments, checks and routine maintenance. When parts are replaced, the observation of a few simple precautions will result in the obtainment of satisfactory performance with a minimum of adjustments.

PINCH ROLLER PRESSURE

1. Depress the PLAY button.
2. Attach the spring scale to right and spacer of pinch roller assembly.
3. Holding the spring scale in right hand, retract the pinch roller assembly approx. 1/2 inch from the capstan shaft. Scale reading at this point should be 150∿200 grams.
4. Adjust pinch roller pressure by bending the spring arm do not attempt to reposition the spring arm in the chassis notches.

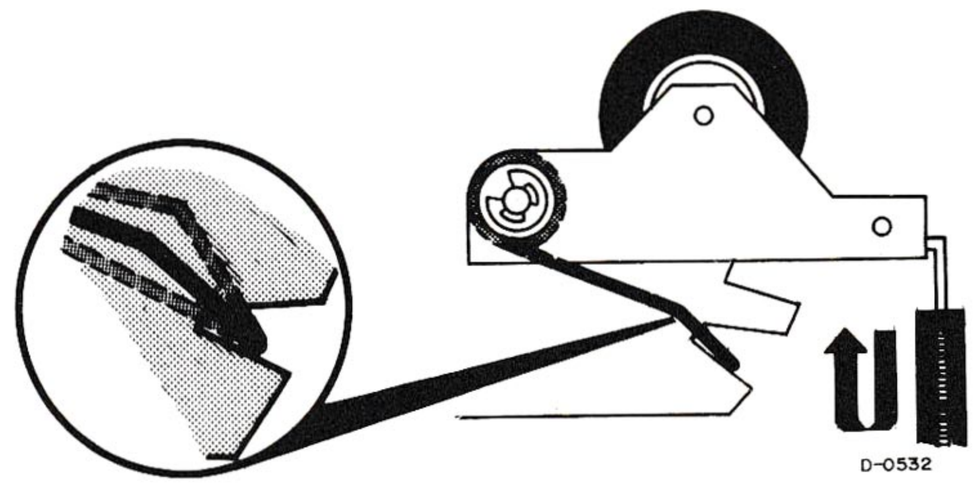

PINCH ROLLER PRESSURE MEASUREMENT

NOTE

The following procedures are performance checks only, no adjustments are provided. Before performing these checks a complete cleaning, demagnetization and lubrication should be accomplished as outlined in the preventative maintenance section of this manual.

FLUTTER/TAPE SPEED

1. Connect a flutter meter to one LINE OUT jack.
2. Connect a digital frequency counter to the remaining LINE OUT jack.
3. Load and play back a TEAC flutter free tape MTT-111.
4. Flutter should not exceed 0.3% at any tape position such as full take up reel, full supply reel or mid point. Digital frequency counter should indicate between 2970 and 3030 Hz.

FAST WIND TIME

Clean all tape path components and check for full AC line voltage. Using an MTT-501HF (C-60) cassette, the fast wind time (fast forward or rewind) should not exceed 90 seconds.

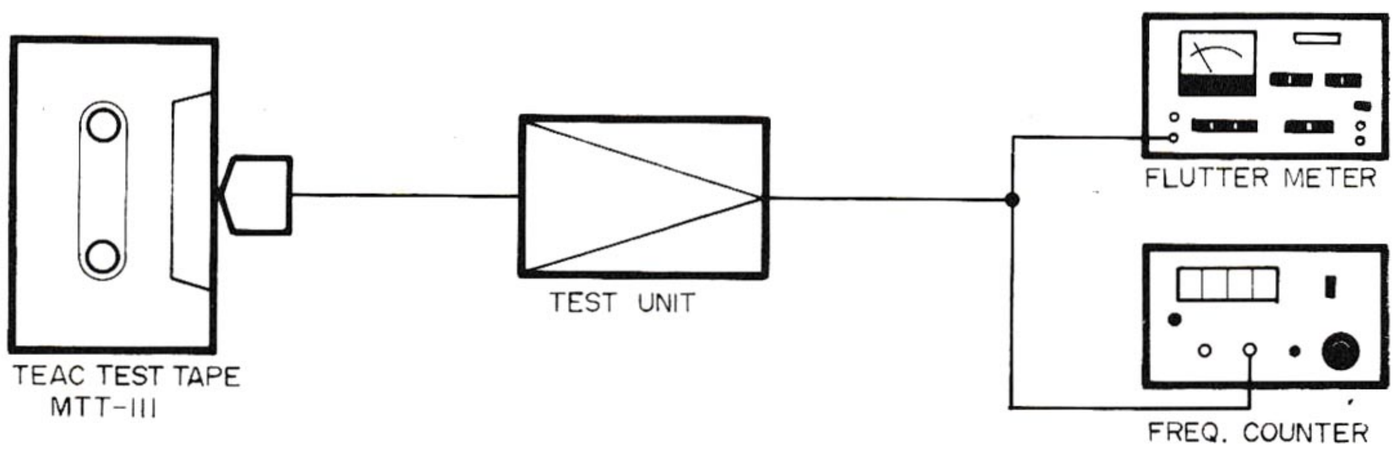

SET UP FOR FLUTTER/TAPE SPEED CHECKS D-0559

www.hifiengine.com

TAKEUP TORQUE

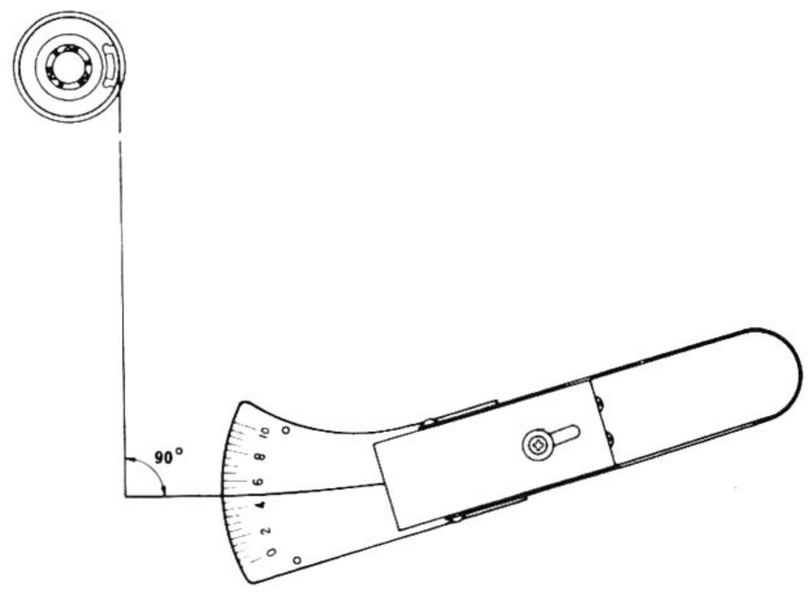

1. With cassette holder removed apply power to the unit.
2. Set the cassette tape hub and spring scale on the(right) take-up reel.
3. Depress the PLAY button.
4. Allow the rotation of the reel to draw the scale toward the hub.

FAST WINDING TORQUE

6. Place the unit in the (▶▶) fast forward mode.
7. Repeat step 4 above, the scale should indicate 70∿150 gram-cm.

REWIND TORQUE

8. Place cassette tape hub and spring scale on the left reel.
9. Depress the (◀◀) rewind button and check torque using the same procedures as in step 4 above. Scale should indicate 70∿150

www.hifiengine.com

PREVENTIVE MAINTENANCE

LUBRICATION

Self lubricating bearing material has been extensively used in the rotary components of the unit. Lubrication is required only after extended periods of use. If required, use only TEAC TZ-255 oil.

- Use a graphite-molybdenum based lubricant such as "MORIKOTE" on all sliding metal to metal surfaces.
- Use a white lithium based lubricant such as "LUBRIPLATE" on rotating plastic parts reel drive assemblies etc.
- Areas to be lubricated should be cleaned of all old lubricant and dust before relubrication.

CAUTIONS

Do not apply excess amounts of oil.
Use only the specified oil and lubricants. Do not lubricate areas not specified. Do not allow oil to contact rotary drive surfaces or belt drive areas.

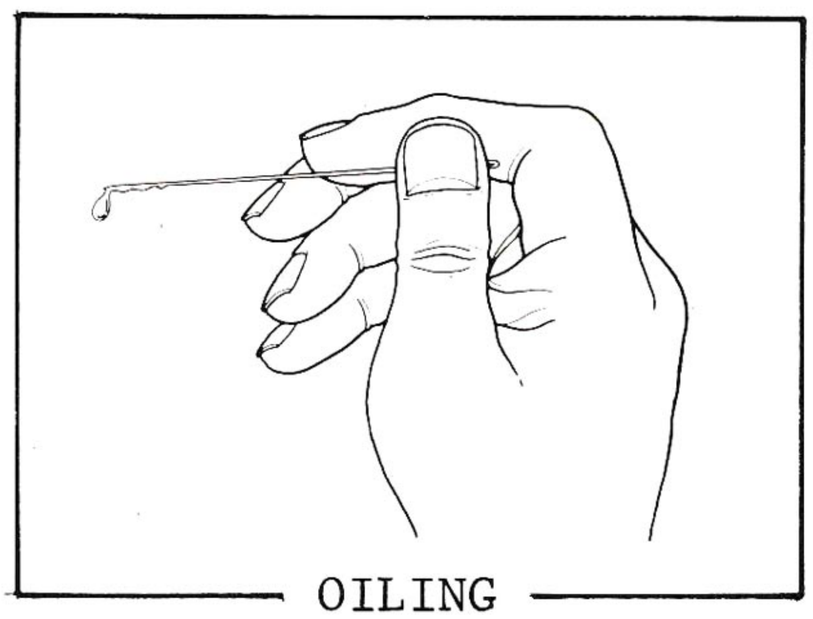

OILING

CLEANING

To maintain optimum performance levels frequent cleaning of the capstan shaft, pinch roller and head surfaces is a necessity.

Use TEAC TZ-251 head cleaner for all metal and head surfaces. Use TEAC TZ-251 rubber cleaner for all rubber surfaces such as pinch roller and idler drive surfaces.

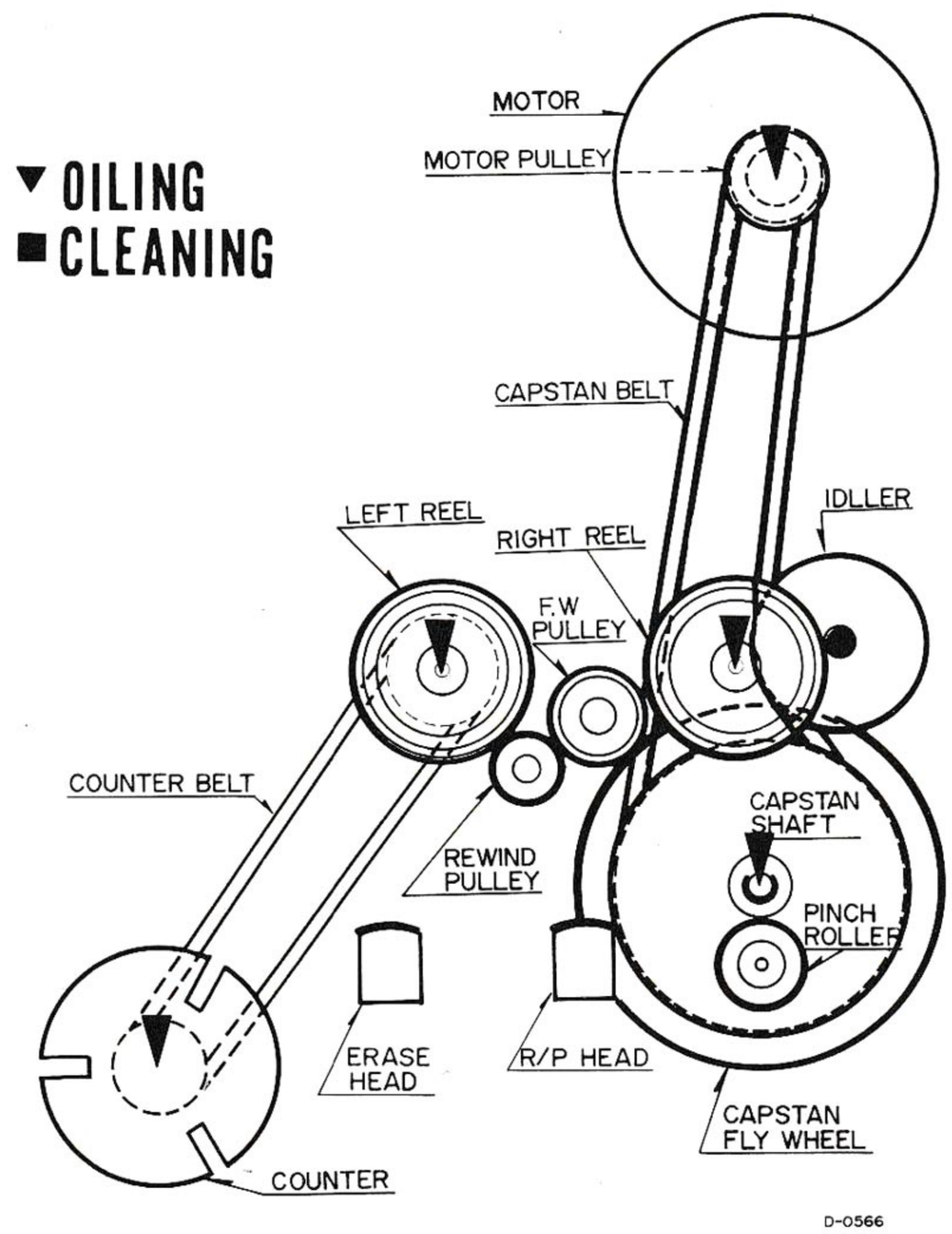

LOCATION OF
CLEANING AND LUBRICATION

www.hifiengine.com

DEMAGNETIZING

Metallic tape path components will become magnetized after extended use periods. Thorough demagnetization should be accomplished before and after any maintenance or testing is performed.

Procedure

1. Connect a TEAC E-1 head demagnetizer to the AC source.
2. Disconnect the power plug of the unit.
3. Depress eject button to open cassette holder.
4. Turn on E-1 demagnetizer, place the tip adjacent to each tape guide, the capstan shaft and all other ferrous metal components. Slowly move it up and down.
5. Place the demagnetizer close to the head and slowly move it up and down, after sweeping the head four or five times slowly withdraw the demagnetizer from the head area.
6. Turn off power to the E-1 only after it has been removed at least one foot from the head area.

NOTE

Demagnetize only the record/playback head.
Demagnetization of the erase head is not required.

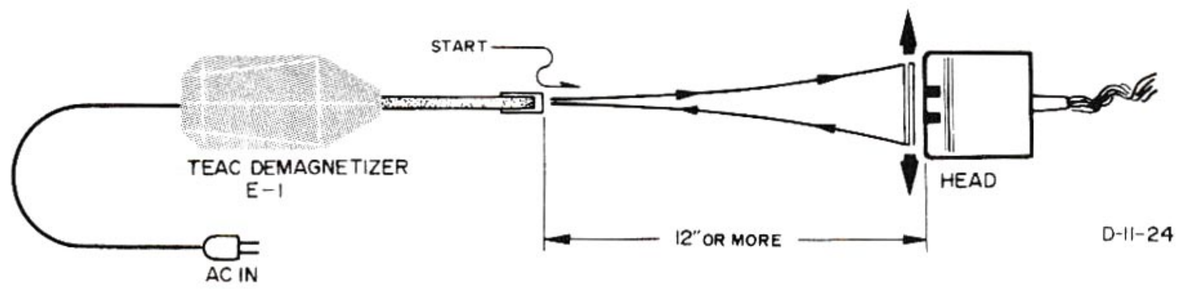

DEMAGNETIZING PROCEDURE

www.hifiengine.com

BLOCK DIAGRAM

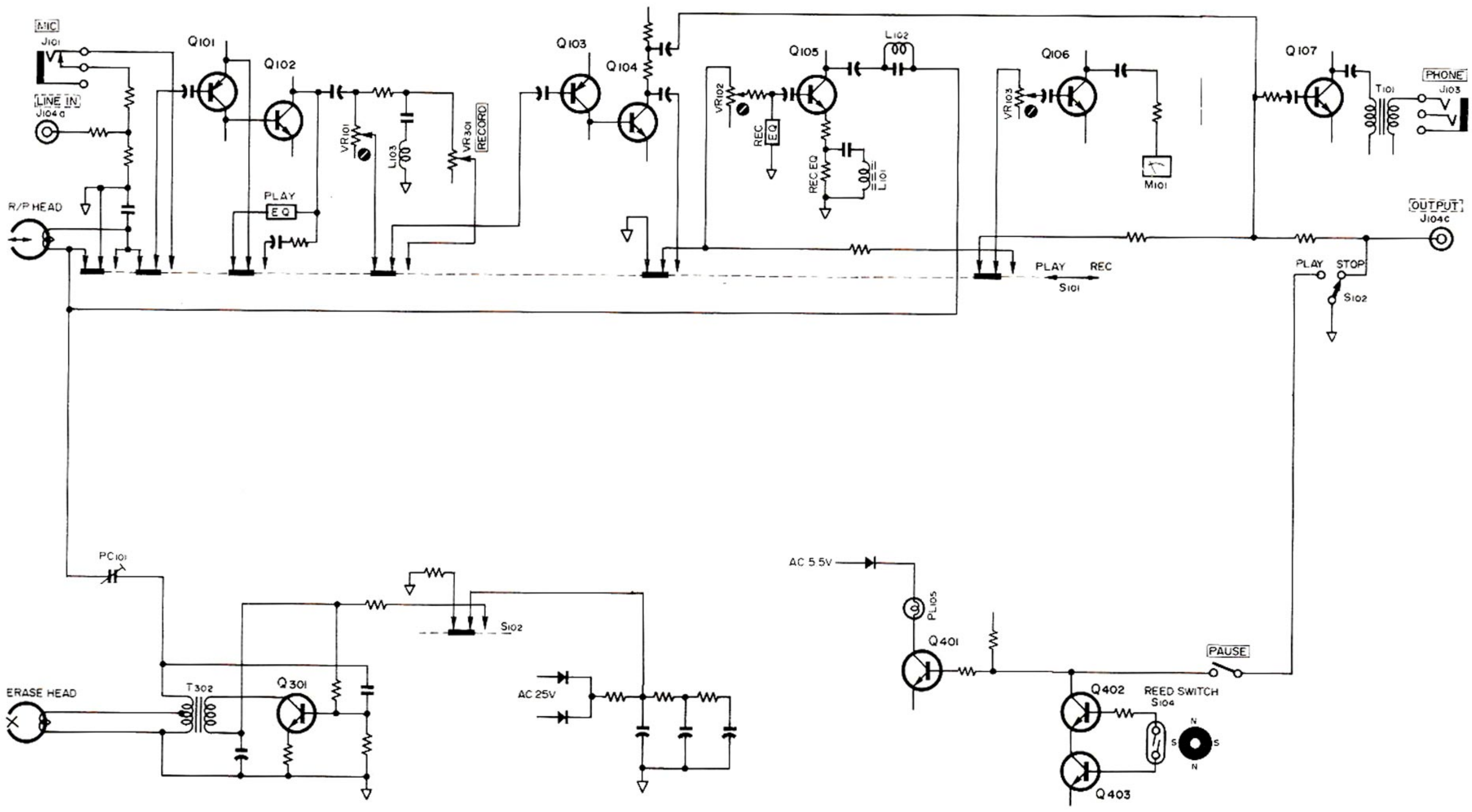

www.hifiengine.com

BLOCK DIAGRAM

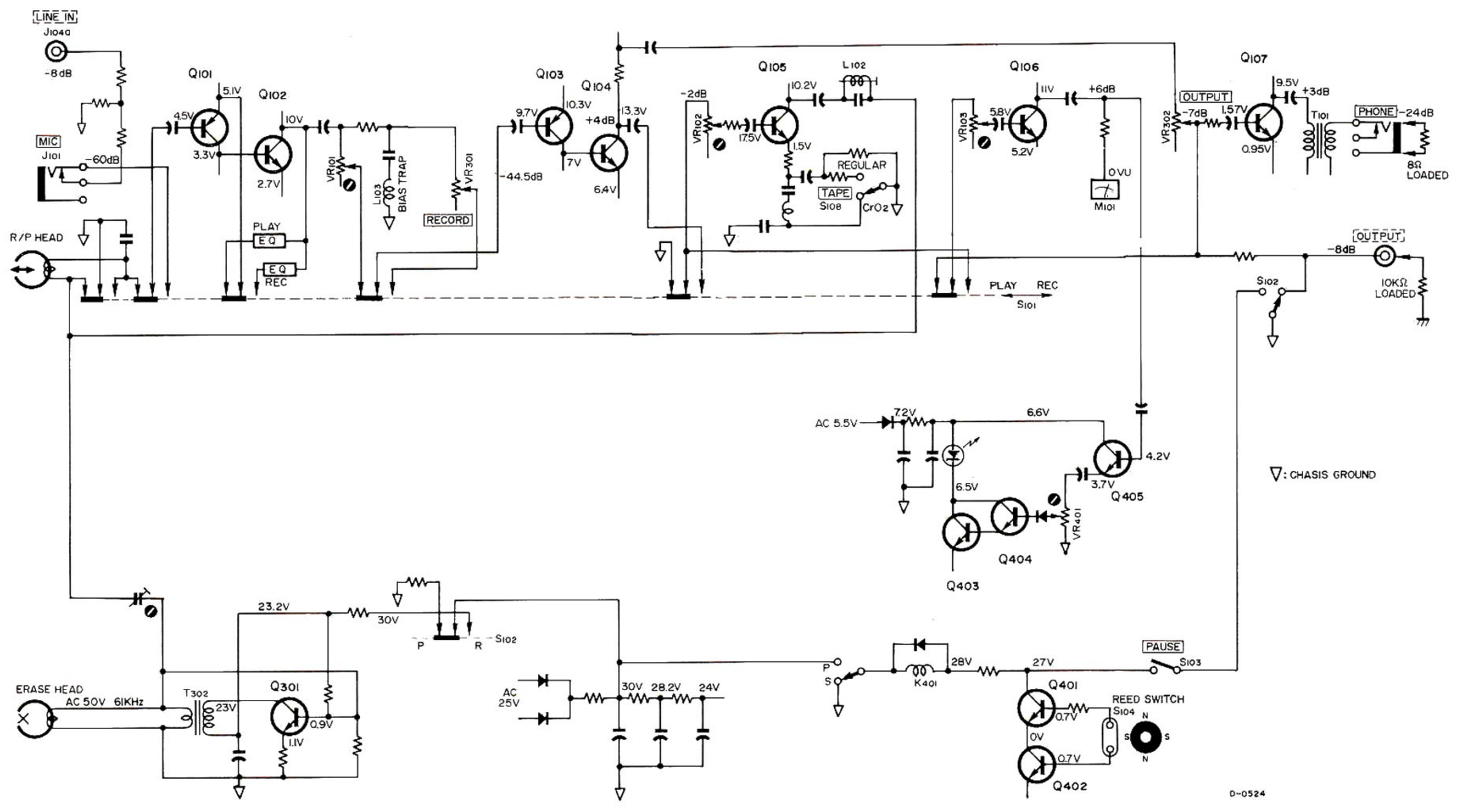

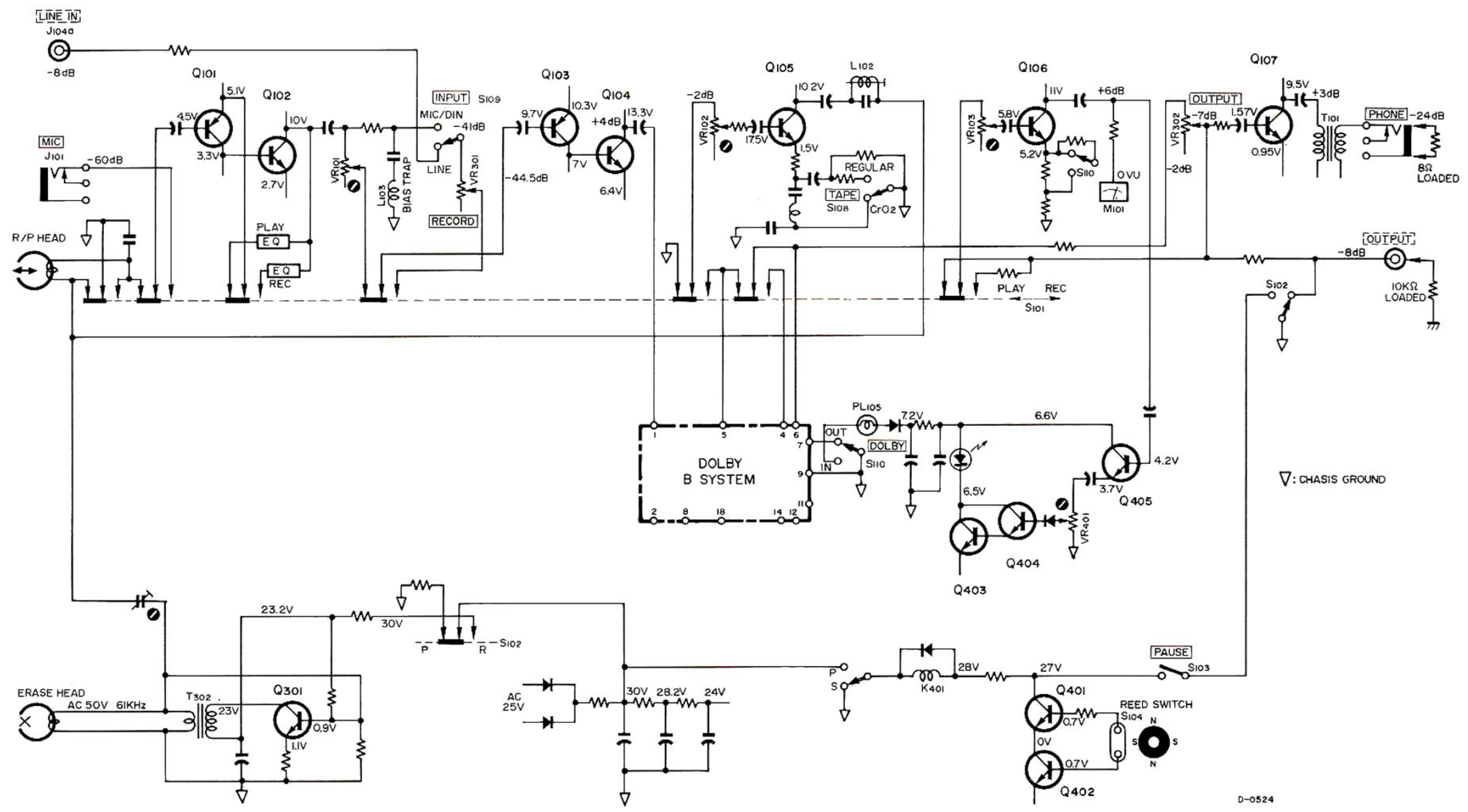

www.hifiengine.com

ELECTRICAL ADJUSTMENT CHECK

GENERAL NOTICE

- Before performing any maintenance on this unit, all metal parts that the tape will come into contact with must be cleaned and demagnetized.

- It is important that the unit is set for the proper voltage and frequency for your locality.

- Standard test tapes and test equipment must be used when performing maintenance to insure reliable results.

- Procedures for checks and adjustments, unless otherwise indicated, are for the left channel.
  The same procedures are to be applied to the right channel.

- All controls mentioned in this book will be printed in bold letters and will be exactly as they appear on the unit.

- Double designated symbol numbers refer to left channel/right channel.

- THD: Third harmonic distortion.

Value of "dB" in the text refers to 0dB=0.775V, except where specified. If a level meter or an AC VTVM calibrated to 0dB=1V is to be used, appropriate compensation should be made.

www.hifiengine.com

PLAYBACK PERFORMANCE

The following checks and adjustments must be performed with the DOLBY switch in the OUT position.

HEAD AZIMUTH ADJUSTMENT

NOTE

The sets VU meters may be used for this adjustment however a more accurate adjustment will be obtained with a level meter.

1. With a level meter connected to the output jacks, place a TEAC test tape MTT-116L on the unit.
2. With OUTPUT controls at maximum, play a test signal of 6.3 or 8 kHz, (recorded at 10 dB below operating reference level).
3. Adjust azimuth screw on left side of playback head for a max. indication on the level meter. After adjustment is complete, secure the screw with "LOCTITE" or insulating paint.

NOTE

Equalization circuits are factory adjusted, no service adjustment is required. Perform azimuth adjustment very carefully for a clearly defined max. reading. A slight mal-adjustment can result in poor playback high frequency response.

4. Invert the test tape and repeat the above procedure. Readings should be identical for reverse side of tape.

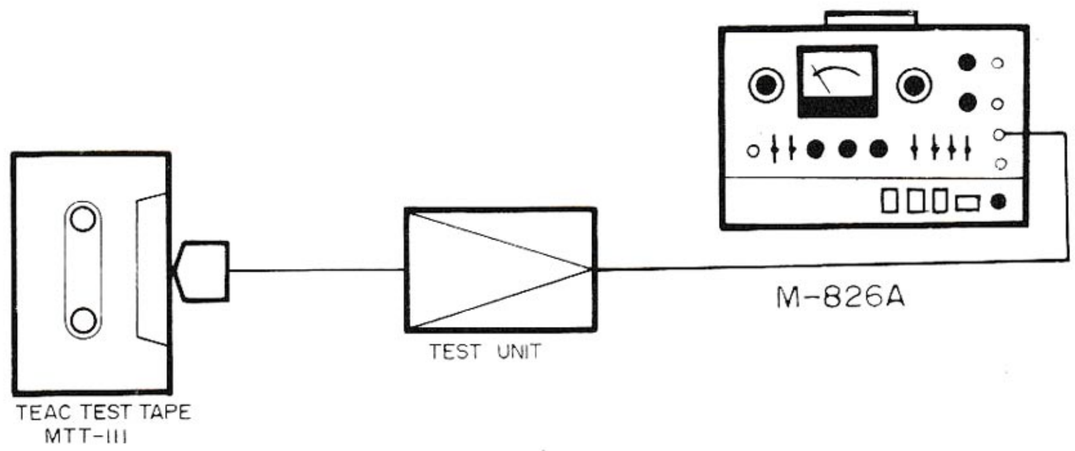

PLAYBACK PERFORMANCE
SET UP

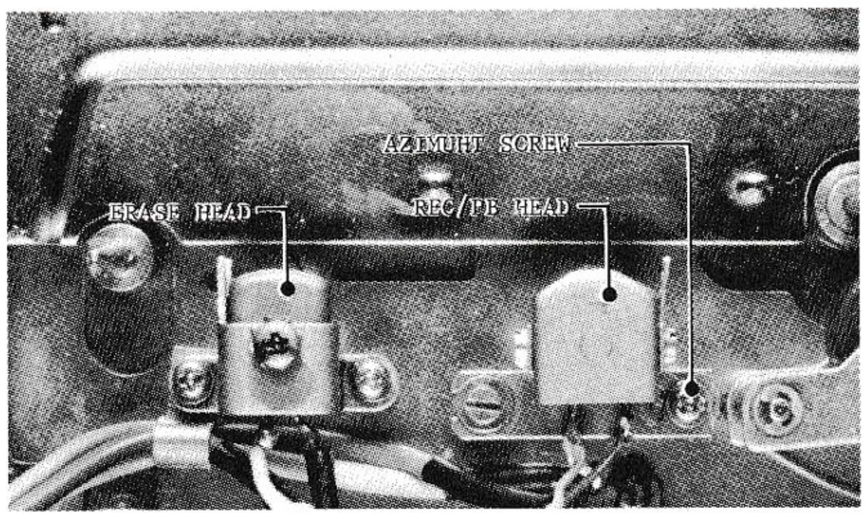

ADJUSTABLE LOCATION

SPECIFIED OUTPUT LEVEL SET

NOTE

Connect a 10 kΩ load across output jacks when not using the TEAC M-826A test set.

5. Slide output controls to specified position, see figure below.
6. Play a 333 Hz signal recorded at operating reference level from the test tape.
7. The level meter should indicate -8 dB.
   Adjust VR-101/201 to achieve the required level.

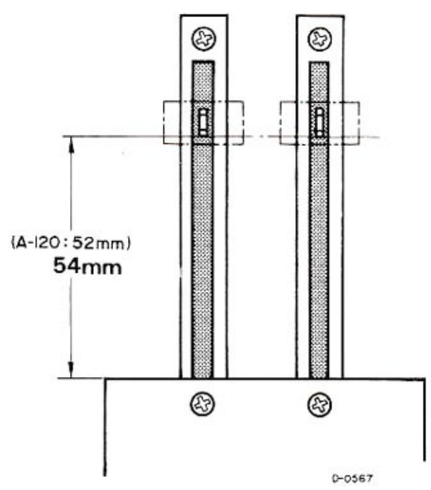

IMPORTANT

This is the specified output level. Do not disturb this setting until the remaining adjustments have been completed.

www.hifiengine.com

VU METER CALIBRATION

8. Adjust VR-103/203 for a 0 VU indication on the VU meters. The centerline between the red and white areas equals 0 VU.

FREQUENCY RESPONSE CHECK

9. Play the test tape tones from 10 kHz down to 40 Hz observing the output on a level meter.

NOTE

If the frequency response does not meet specified response limits head should be checked for accumulated dirt or oxides. If clean, head azimuth must be readjusted.

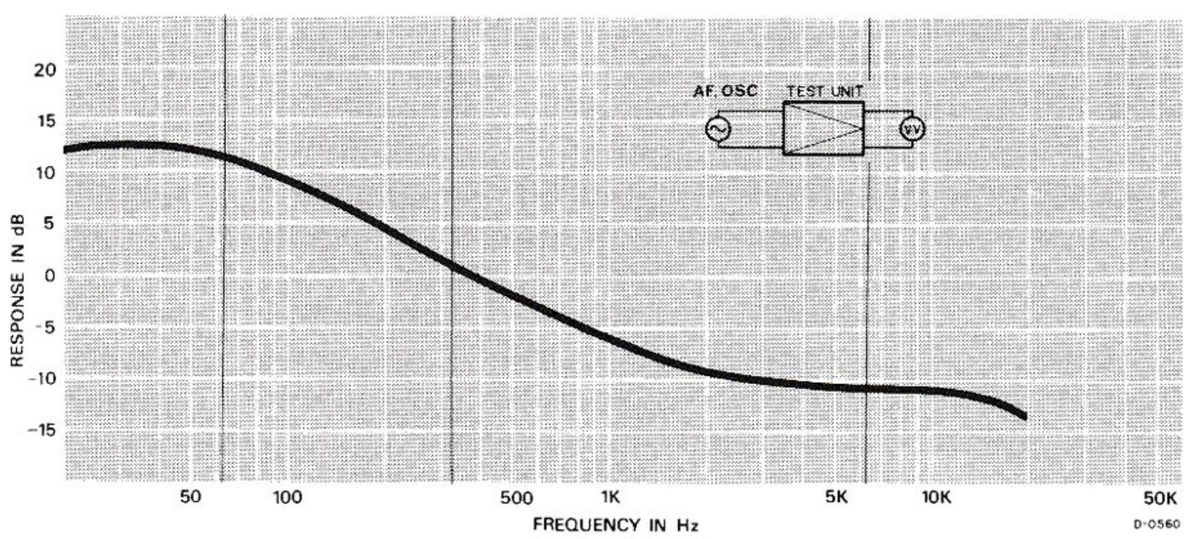

PLAYBACK EQUALIZATION CURVE

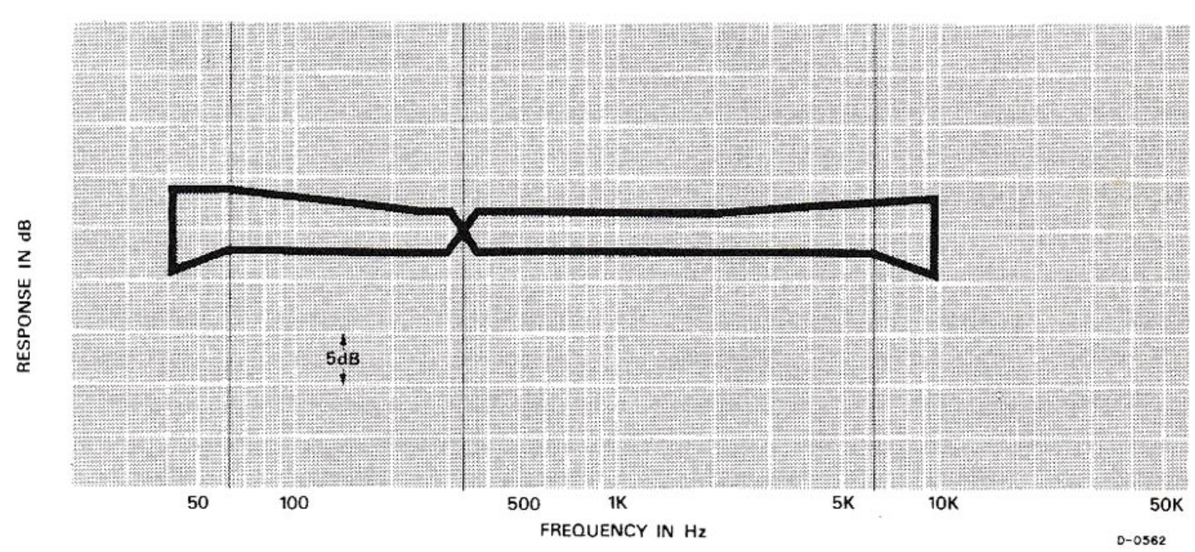

FREQUENCY RESPONSE LIMIT

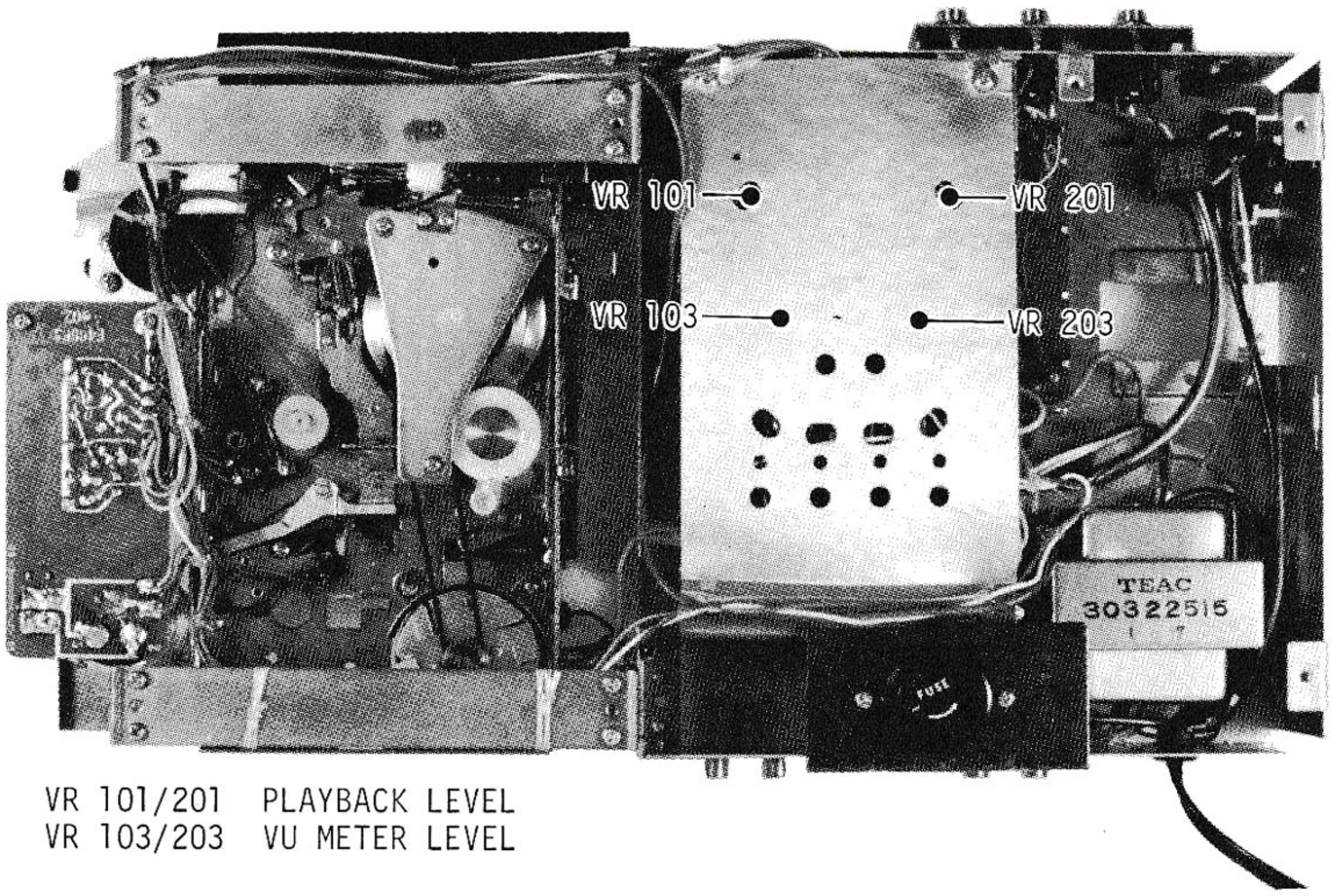

VR 101/201 PLAYBACK LEVEL
VR 103/203 VU METER LEVEL

ADJUSTABLE LOCATION

NOISE LEVEL CHECK

10. Depress PLAY and PAUSE buttons.
11. Level meter should indicate -56 dB or less (48 dB S/N).

NOTE

With PLAY button in the neutral position, S-104 muting switch is closed, output should be 0 dB.

www.hifiengine.com

SPECIFIED INPUT LEVEL SET

1. Connect an AF oscillator to LINE IN jacks.
2. Apply a 1 kHz signal at -8 dB.
3. Set the INPUT switch to LINE. (A-350 ONLY)
4. Position the RECORD level controls for 0 VU indication on the VU meters.

IMPORTANT

This is the specified input level setting. Do not disturb this setting until the remaining checks and adjustments have been completed.

PEAK LEVEL INDICATOR LEVEL SETTING (A-330 350 ONLY)

NOTE

If top cover is removed, connect peak level indicator (in case cover) to circuit with jumper leads.

5. Apply a 1 kHz signal at -4 dB to left LINE IN jack only.
6. Adjust VR-401 until peak level indicator illuminates.
7. Reduce signal level to -6 dB, peak level indicator should extinguish.
   Apply the same signal to right channel, adjust as above with VR-402.

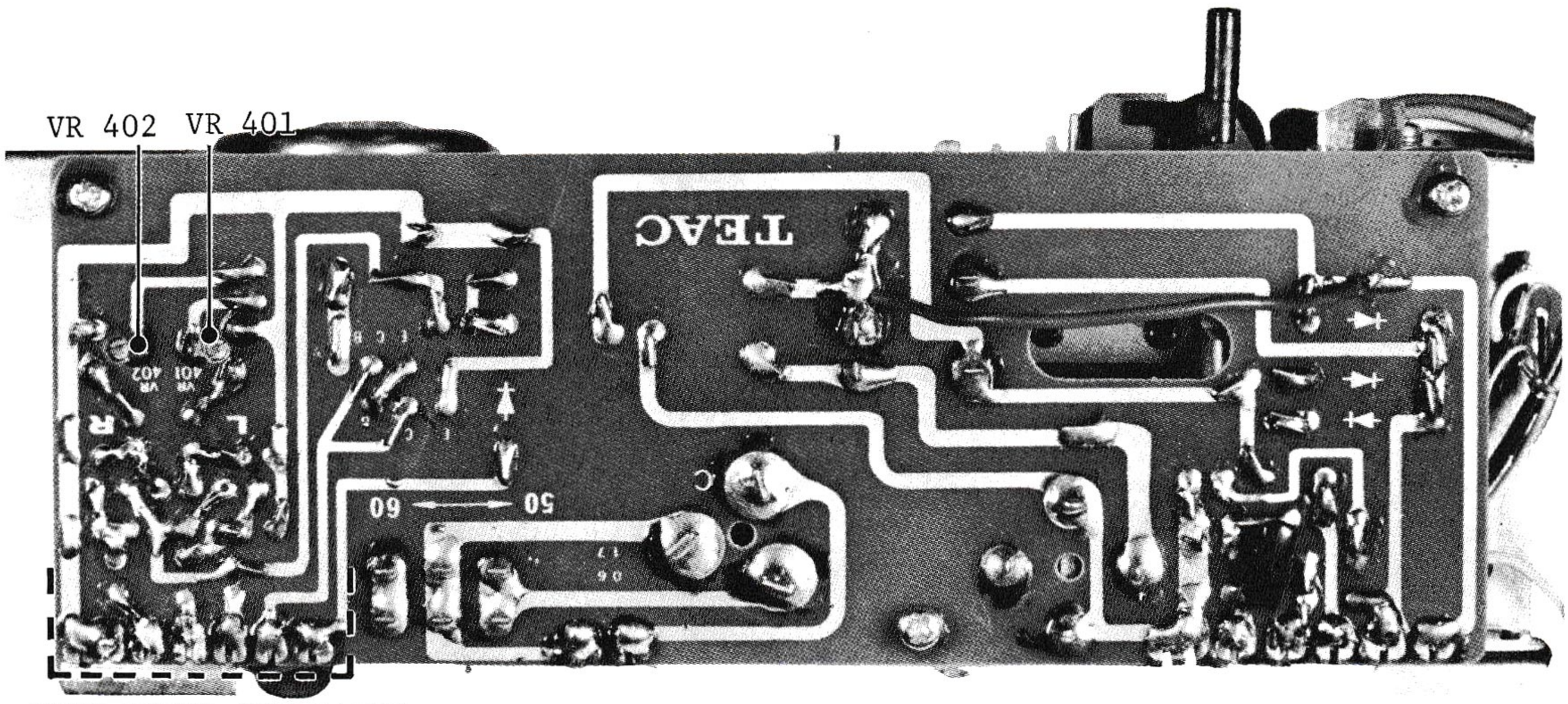

PEAK LEVEL INDICATOR CIRCUIT (A-330/350)

VIEW FROM LEFT SIDE

ADJUSTABLE PARTS LOCATION

www.hifiengine.com

BIAS OSCILLATOR VOLTAGE CHECK

1. Apply power, load a record test tape on the unit.
2. Place the unit in the record mode.
3. Measure the AC voltage across the erase head. The normal reading is 38V or more.

BIAS TRAP ADJUSTMENT

1. Connect an AC VTVM to bias test points and ground. See figure below.
2. Load a blank test tape MTT-501HF on the unit.
3. Place the unit in the record mode and depress the PAUSE button.
4. Adjust the bias trap L-102/202 for maximum indication on the VTVM.

NOTE

The bias leakage voltage at the output jacks should be less than -32 dB as indicated on the level meter.

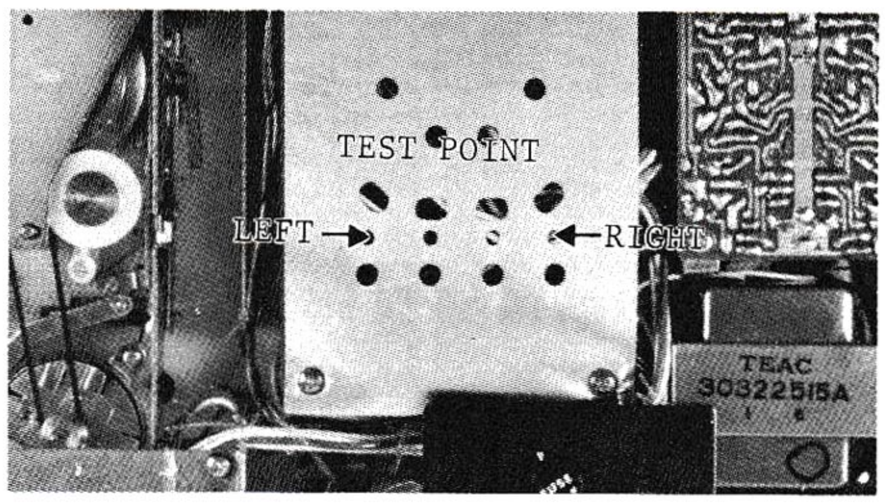

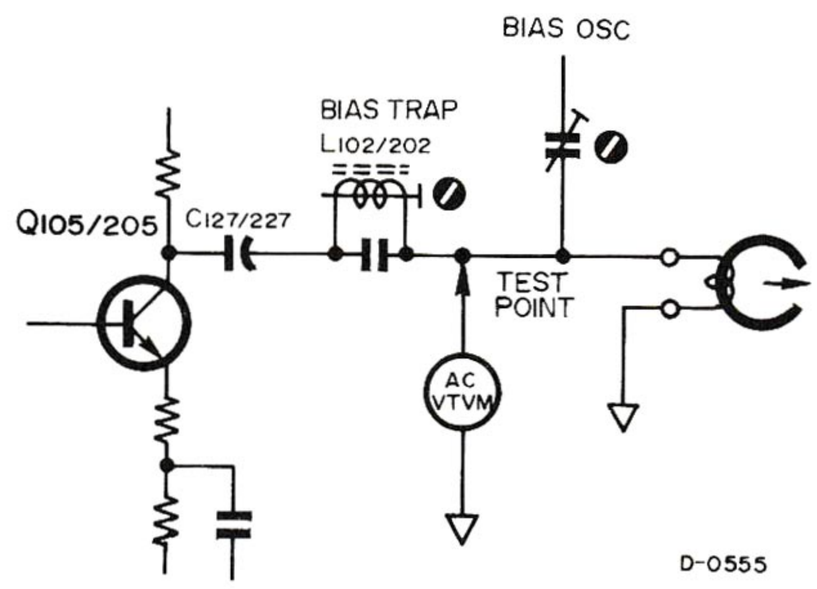

TEST POINTS

BIAS VOLTAGE ADJUSTMENT

NOTE

The following procedures also cover frequency response checks.

5. Set TAPE switch at REGULAR position, DOLBY switch to OUT.
6. Adjust trimmer capacitors PC-101/201 to obtain a reading of approx. 13 volts on the AC VTVM.
7. Connect AF oscillator to both LINE IN jacks.
8. The RECORD and OUTPUT controls to specified level positions.
9. Apply a signal of 500 Hz and 7 kHz at -28 dB, record several mun-utes of each signal.
10. Rewind the tape and play back the recorded signal. The record out-put level for the 500 Hz signals should be -28 dB.

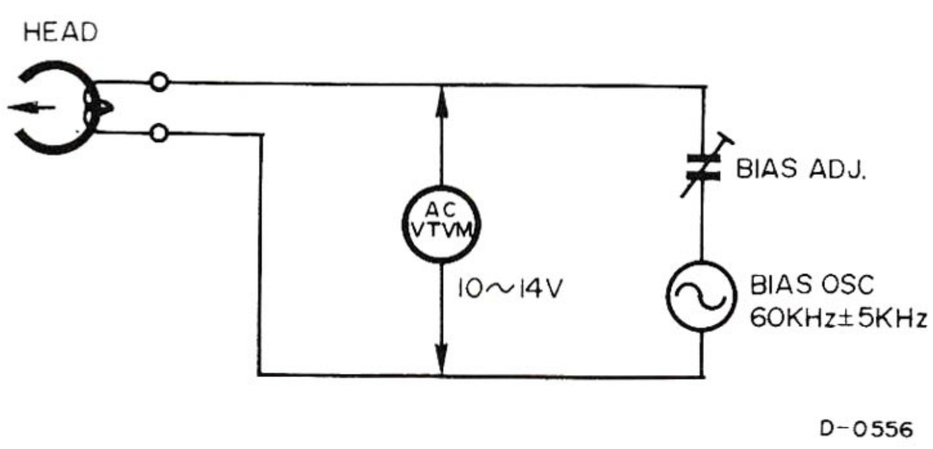

BIAS VOLTAGE MEASUREMENT

NOTE

Output signal at playback should not vary more than 4 dB between frequencies. If deviation of the 7 kHz signal is greater than 4 dB increase the bias voltage, if less decrease the bias voltage.
The 7 kHz and 500 Hz signals should be uniform in output level.

www.hifiengine.com

RECORD LEVEL SET

11. Apply a 500 Hz/-8 dB to LINE IN jacks.

IMPORTANT

The OUTPUT and RECORD controls should be at specified level position.

12. Record this signal for approximately 15∿20 seconds.
13. Rewind the tape and play back this recording. The output level measured at the OUTPUT jacks should be -8 dB.
14. If this output level is incorrect, make adjustments of VR-101/201. Repeat the entire procedure.

NOTE

Repeat procedure as required to obtain the correct output level.

RECORD NOISE AND ERASE CHECK

15. Record a 1 kHz signal at 0 VU record level for approximately 30 seconds.
16. Disconnect the AF oscillator from the LINE IN jacks.
17. Rewind the tape to the start of the 1 kHz recording.
18. Run tape again in record mode with no signal applied. After it has been erased, rewind the tape and measure the noise level while playing it back. The noise level should be -53 dB or less.

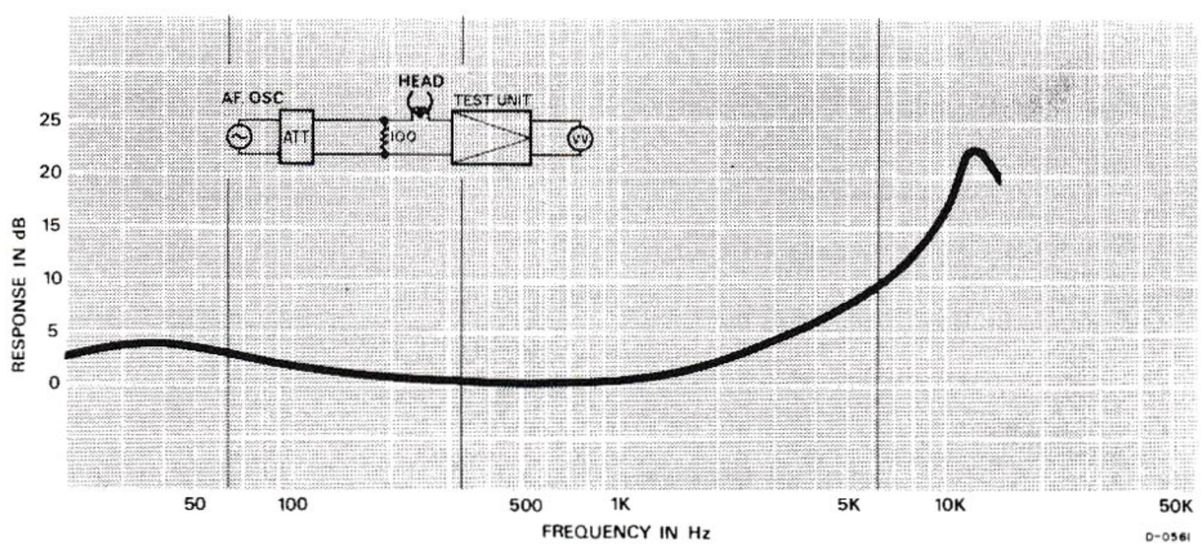

RECORD EQUALIZATION CURVE

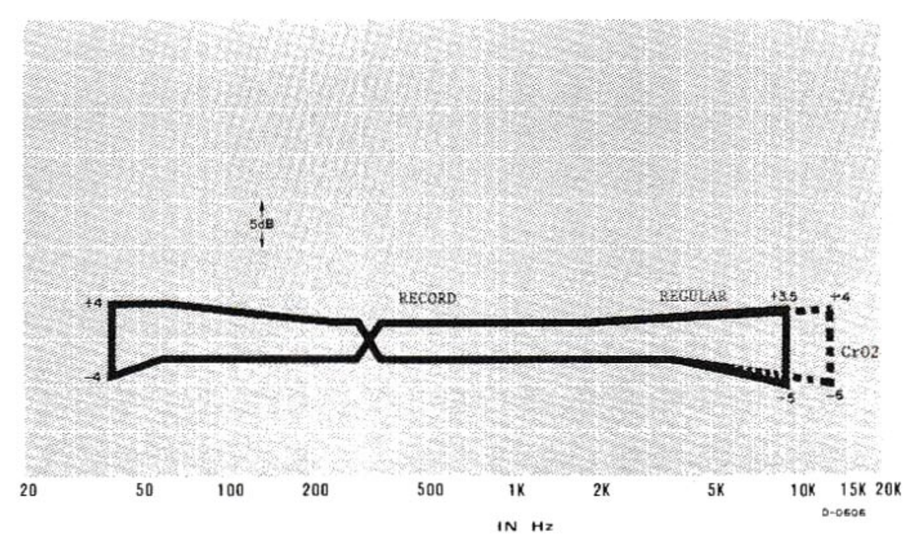

FREQUENCY RESPONCE LIMITS

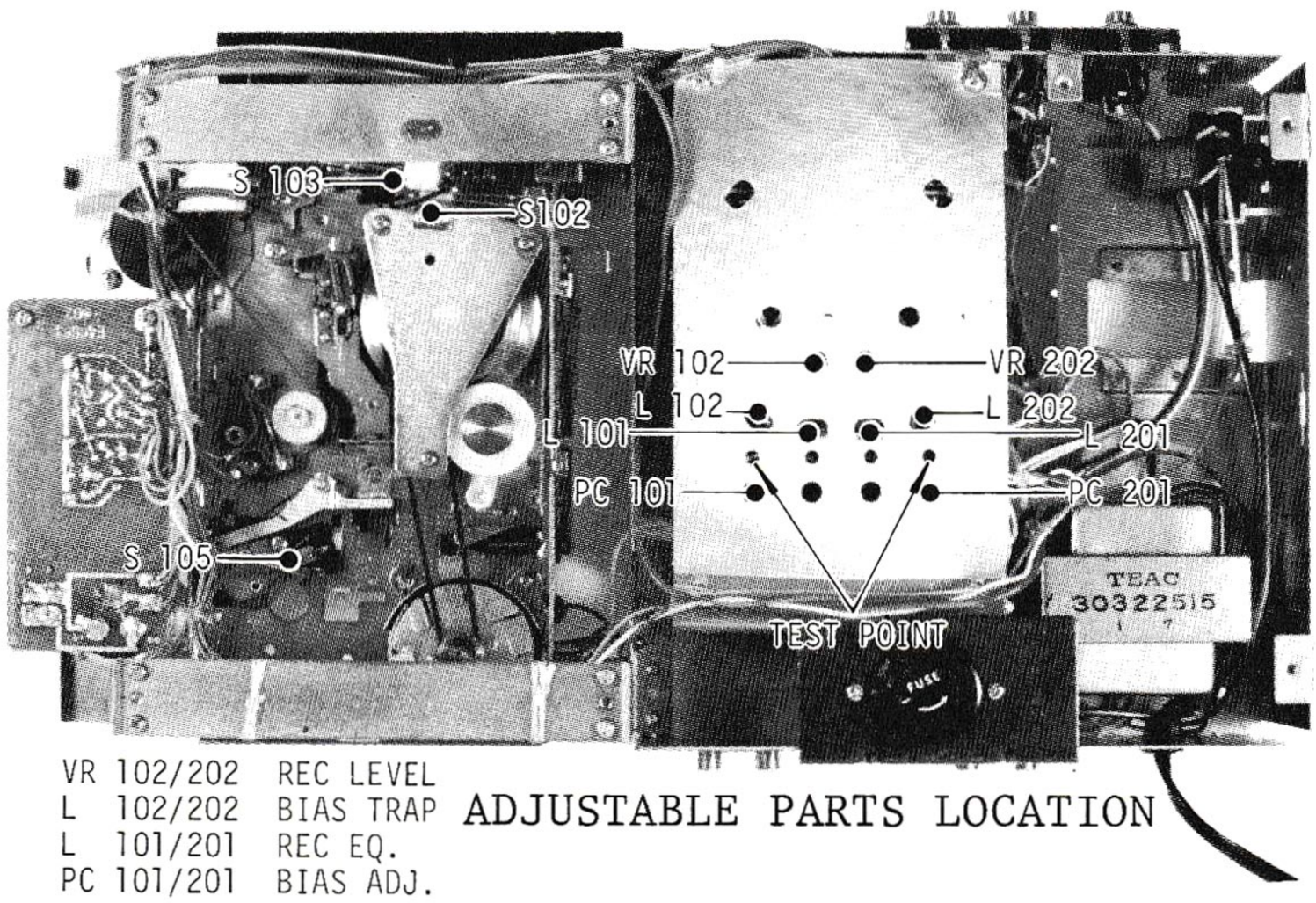

VR 102/202 REC LEVEL
L 102/202 BIAS TRAP
L 101/201 REC EQ.
PC 101/201 BIAS ADJ.

ADJUSTABLE PARTS LOCATION

www.hifiengine.com

RECORD TEST, CHROMIUM DIOXIDE TAPE

NOTE

This is a performance check only, no adjustment is provided.

1. Set TAPE switch to CrO2 position.
2. Using a chromium dioxide test tape record frequencies of 100 Hz, 1 kHz and 7 kHz.
3. Rewind the tape and play it back. The recording output levels should be within the response limits.
4. After completing check, return TAPE switch to REGULAR position.

CROSS TALK REJECTION

Between Channel

NOTE

To check cross talk, a 1 kHz narrow band filter (TEAC M-204) must be used.

1. Apply 1 kHz at -8 dB into the left channel (LINE IN L).
2. Connect short plug to R (right channel) LINE IN jack.
3. Record 30 seconds of 1 kHz signal.
4. Rewind the tape to the start of the 1 kHz signal recording.
5. Connect a level meter to OUTPUT R jack, through the 1 kHz narrow band filter.
6. Play the no signal record track of tape, the level meter should indicate -38 dB (30 dB channel cross talk) or more.

Between Track

NOTE

TEAC M-204 filter is not required for this check.

1. Load unit with bulk erased record test tape.
2. Apply 100 Hz at -8 dB into the R (right) LINE IN.
3. Connect the level meter to R OUTPUT jack.
4. Make a recording of 30 seconds of 100 Hz signal.
5. Lift the record test tape out, flip it over, and insert in the unit, play the tape back.
6. The level meter should read -48 dB (40 dB adjacent track cross talk) or more.

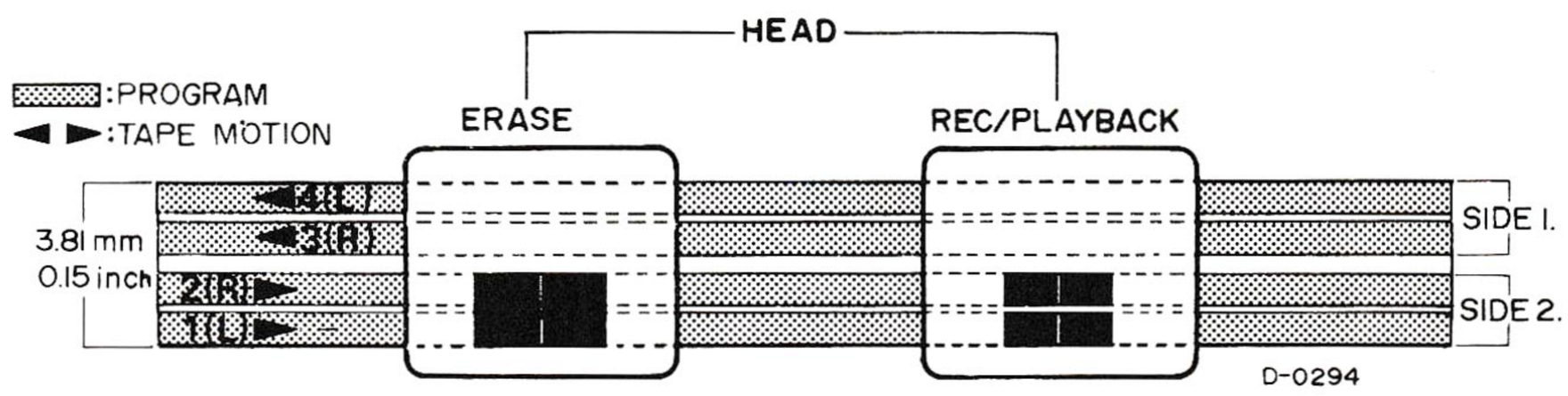

TRACK CONFIGURATION

DOLBY B UNIT

SPECIAL NOTE

The Dolby Circuitry has been carefully adjusted at the factory. Field service adjustments or individual component replacement is not advised.

In the event of a DOLBY circuit failure, replace the assembly as a unit. Replacement units are factory adjusted to most critical specifications.

DOLBY CIRCUIT PERFORMANCE CHECKS

PLAYBACK

1. Slide the OUTPUT controls to the specified output level setting. Place the DOLBY switch to OFF position.
2. Load a TEAC test tape MTT-112 on the unit.
3. While playing back the 333 Hz/0 dB test signal, move the DOLBY switch from OFF to ON position. The output level should increase by 2 dB.

RECORD

4. Load a record test tape MTT-501HF on the unit.
5. Slide the RECORD controls to the specified input level position.
6. Apply a 10 kHz/-38 dB signal to the LINE IN jacks.
7. Record this signal while alternating the DOLBY switch between the OFF and ON positions.
8. Rewind and playback this recording while monitoring the output with a level meter. (Dolby switch at OFF position).
9. The output level should vary 10 dB between the portions recorded at the OFF and ON positions of the DOLBY switch. (Portions recorded at the ON position should show a 10 dB decrease).

NOTES
ON : IN
OFF: OUT

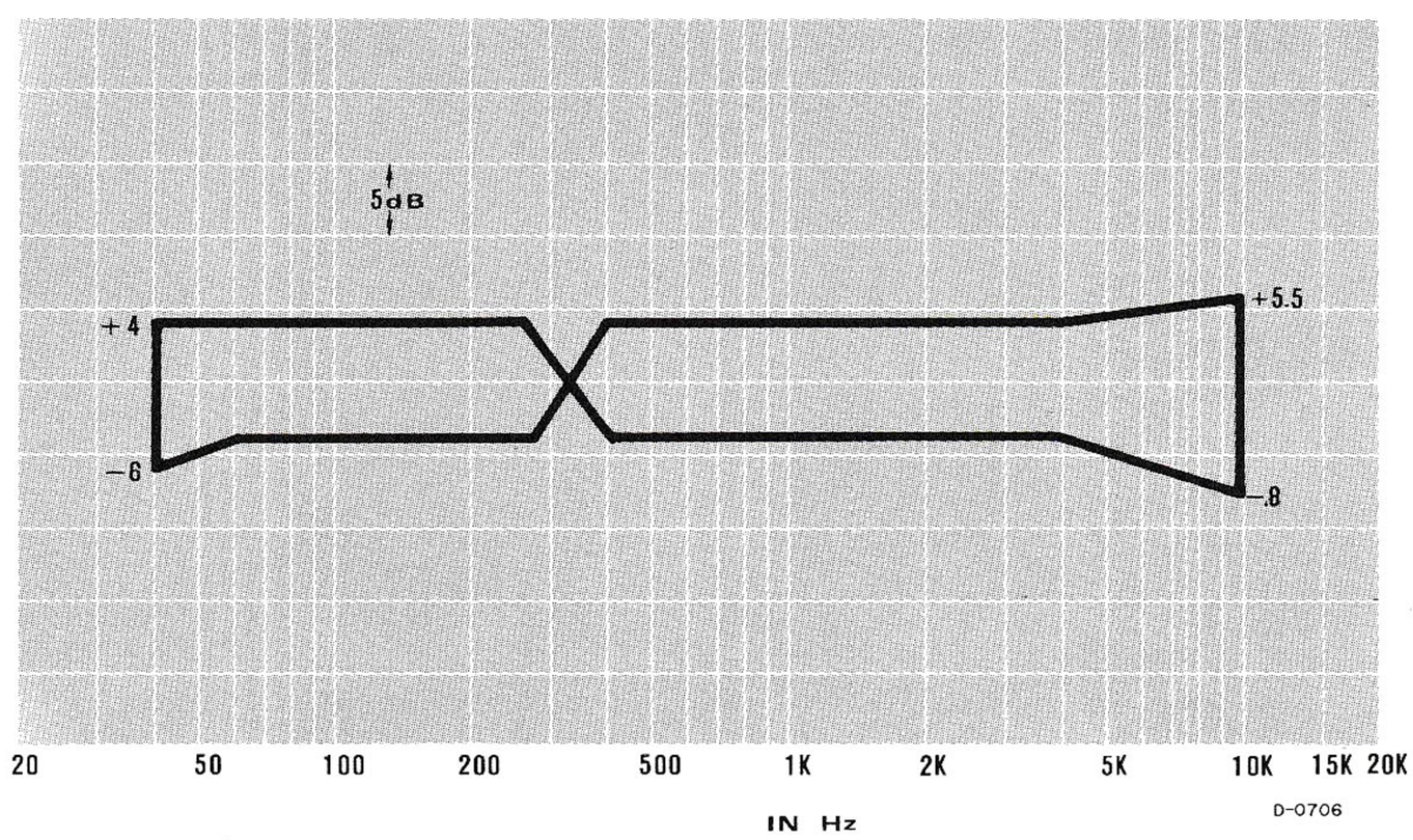

DOLBYLIZED FREQUENCY LIMIT

www.hifiengine.com

SHIPPING INSTRUCTION

If the unit is sent back to TEAC office for repair, complete shipping instructions in the following manner.

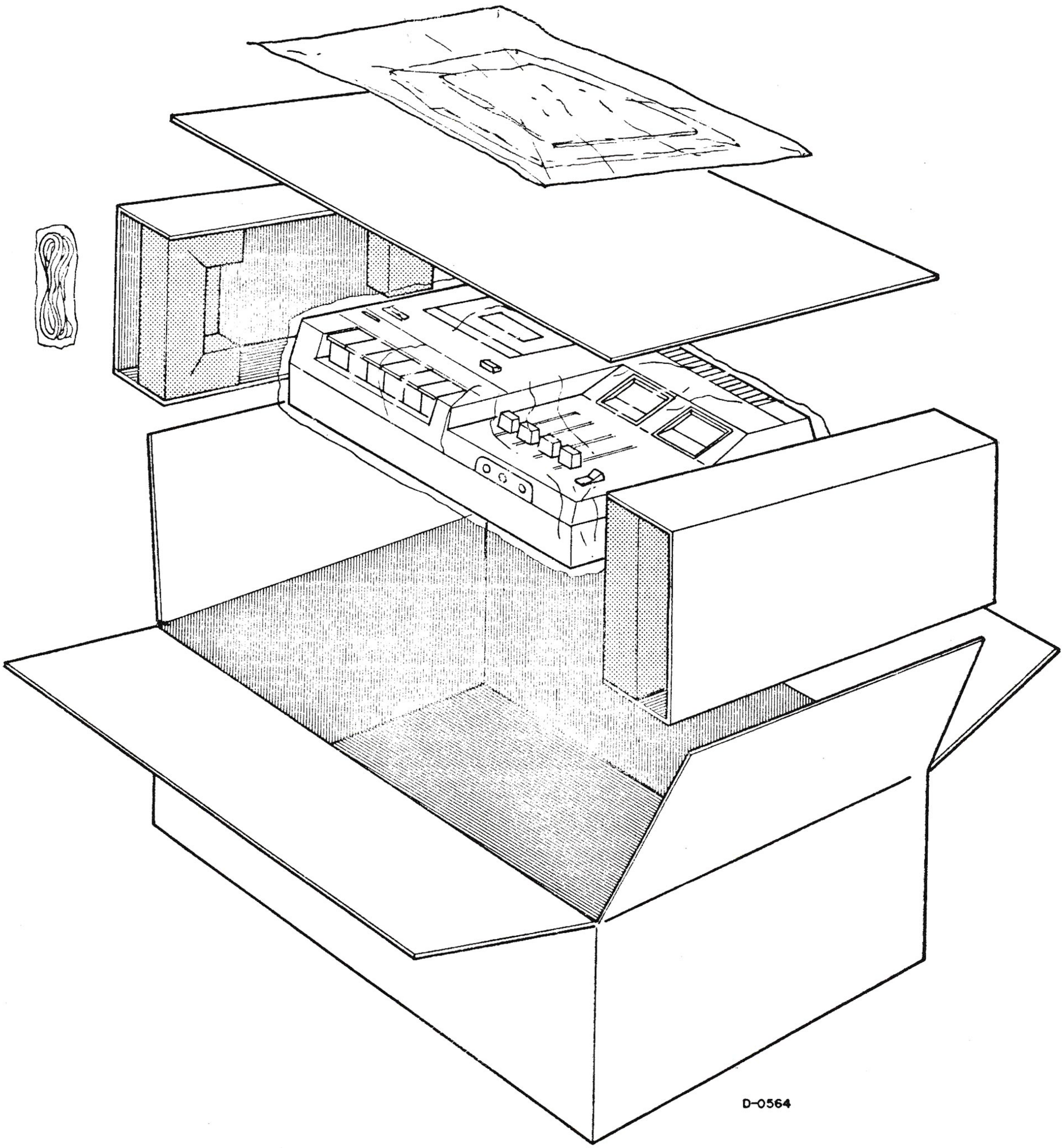

www.hifiengine.com

WARRANTY

Your TEAC equipment has been manufactured under the strictest of quality controls. Its normal operation is under warranty. However, warranty terms may vary with the country (area) in which it was purchased and for different models of equipment. The warranty terms are fully described in the enclosed warranty card, please read the card for complete details.

www.hifiengine.com

MEMO

TEAC

www.hifiengine.com

TEAC

TEAC CORPORATION	3-7-3 NAKA-CHO, MUSASHINO, TOKYO PHONE: (0422) 53-1111	
TEAC CORPORATION OF AMERICA	7733 TELEGRAPH ROAD, MONTEBELLO, CALIFORNIA 90640	PHONE: (213) 726-0303
TEAC TONBAND-ANLAGEN VERTRIEBS GmbH	6200 WIESBADEN-ERBENHEIM, EGERSTRASSE 2, WEST GERMANY	PHONE: (06121) 74225 ~ 8
TEAC HONGKONG LIMITED	FLAT 78, PORTLAND HOUSE, 7TH FLOOR, BLOCK C, No. 41-D, MA TAU WEI ROAD, KOWLOON, HONG KONG. PHONE: 3-659071	

PRINTED IN JAPAN 0975E0.5

www.hifiengine.com

EXPLODED VIEW AND PARTS LIST

FOR A-110, A-120, A-330, AND A-350

REPLACEMENT INFORMATION

Replacement part are available through your nearest TEAC dealer or directly from the TEAC office.
Changes are constantly being made to make TEAC products better and more reliable.
Therefore, when ordering parts, always include the following information:

MODEL *SERIAL NO.* *REF NO.* *PART NO.* *DESCRIPTION*

NOTE

The basic design of the A-330/A-350 is highly similar to that of the A-110/A-120, therefore information in this exploded view may be applied to the A-330/A-350.

Refer to the last page of this section for separate parts list for the A-330/A-350.

The exploded view and parts list in this manual apply to the A-350. Since the A-330 is highly similar(except for input selector and Dolby switches) the exploded view and parts list are also applicable to the A-330.

www.hifiengine.com

TRIM PARTS

A-120

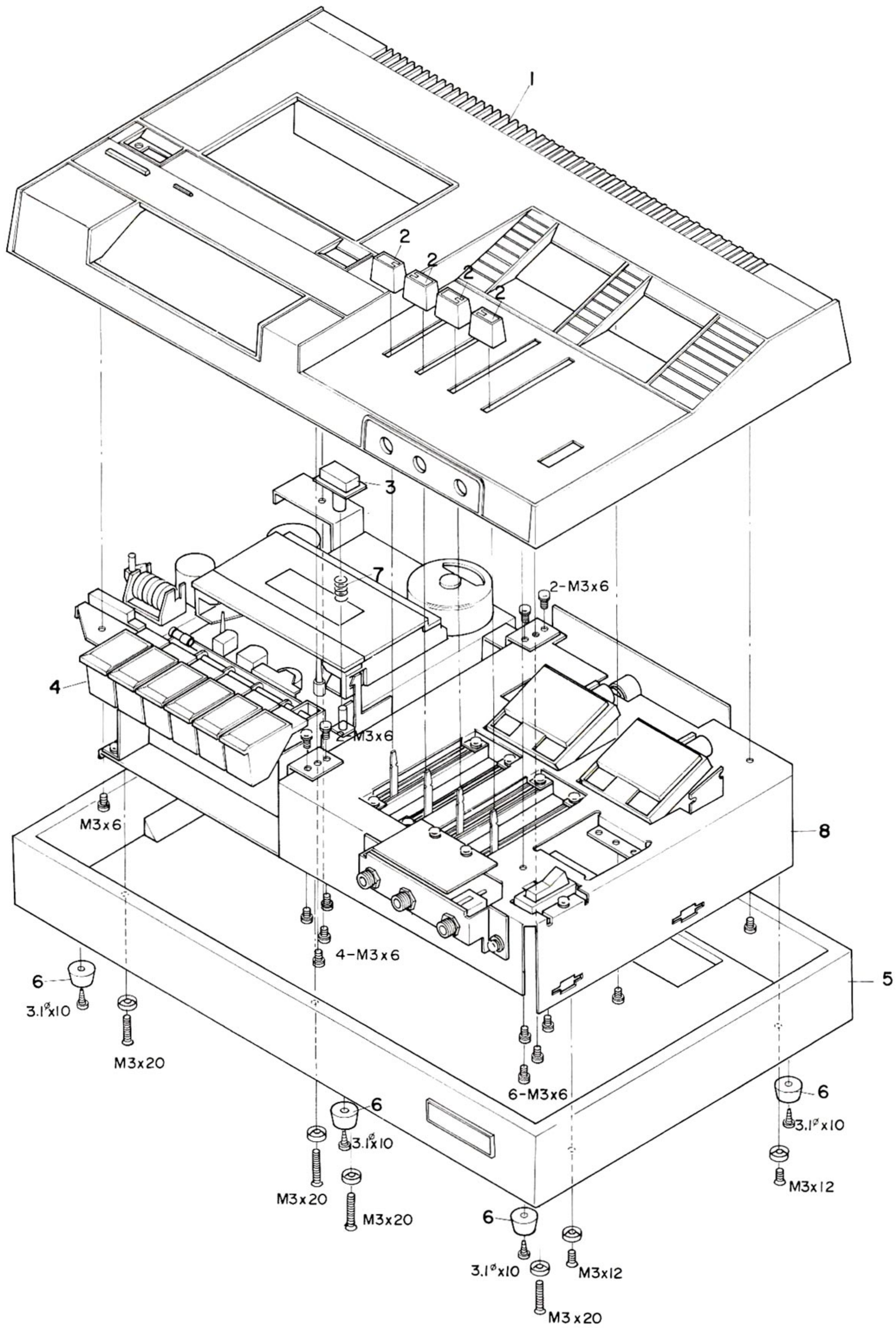

REF. NO.	TEAC PARTS NO.	DESCRIPTION	1st	2nd	3rd
1-1	50828350	Plastic Case Assy			
1-2	50828820	Knob			
1-3	50827700	Push Button, Eject			
1-4		Tape Transport Assy			
1-5	50828401	Wooden Case			
1-6	50828800	Mount Foot			
1-7	50827712	Spring, Eject			
1-8		Amplifier Assy			

www.hifiengine.com

TRIM PARTS

A-350

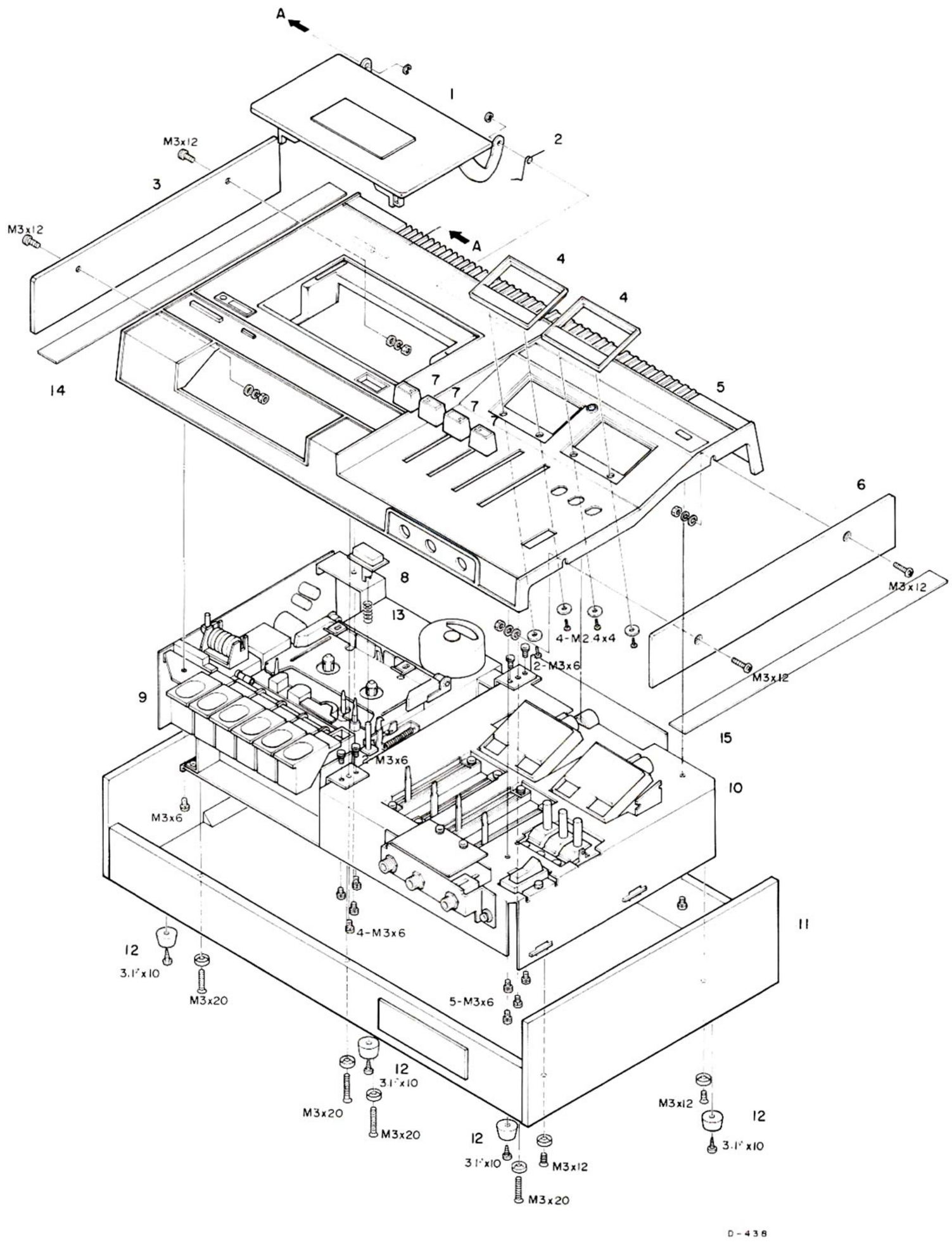

REF. NO.	TEAC PARTS NO.	DESCRIPTION	1st	2nd	3rd
1- 1	50828530	Cover, Cassette Compartment			
1- 2		Spring, Cassette Compartment Cover			
1- 3	50828770	Side Trim Panel, L			
1- 4	50828751	Escutcheon, VU-Meter			
1- 5	50828520	Plastic Case			
1- 6	50828780	Side Trim Panel, R			
1- 7	50828820	Knob			
1- 8	50829180	Push Button, Eject			
1- 9		Tape Transport Assy			
1-10		Amplifier Assy			
1-11	50828791	Wooden Case			
1-12	50828800	Mount Foot			
1-13	50827712	Spring, Eject			

www.hifiengine.com

MAIN CHASSIS

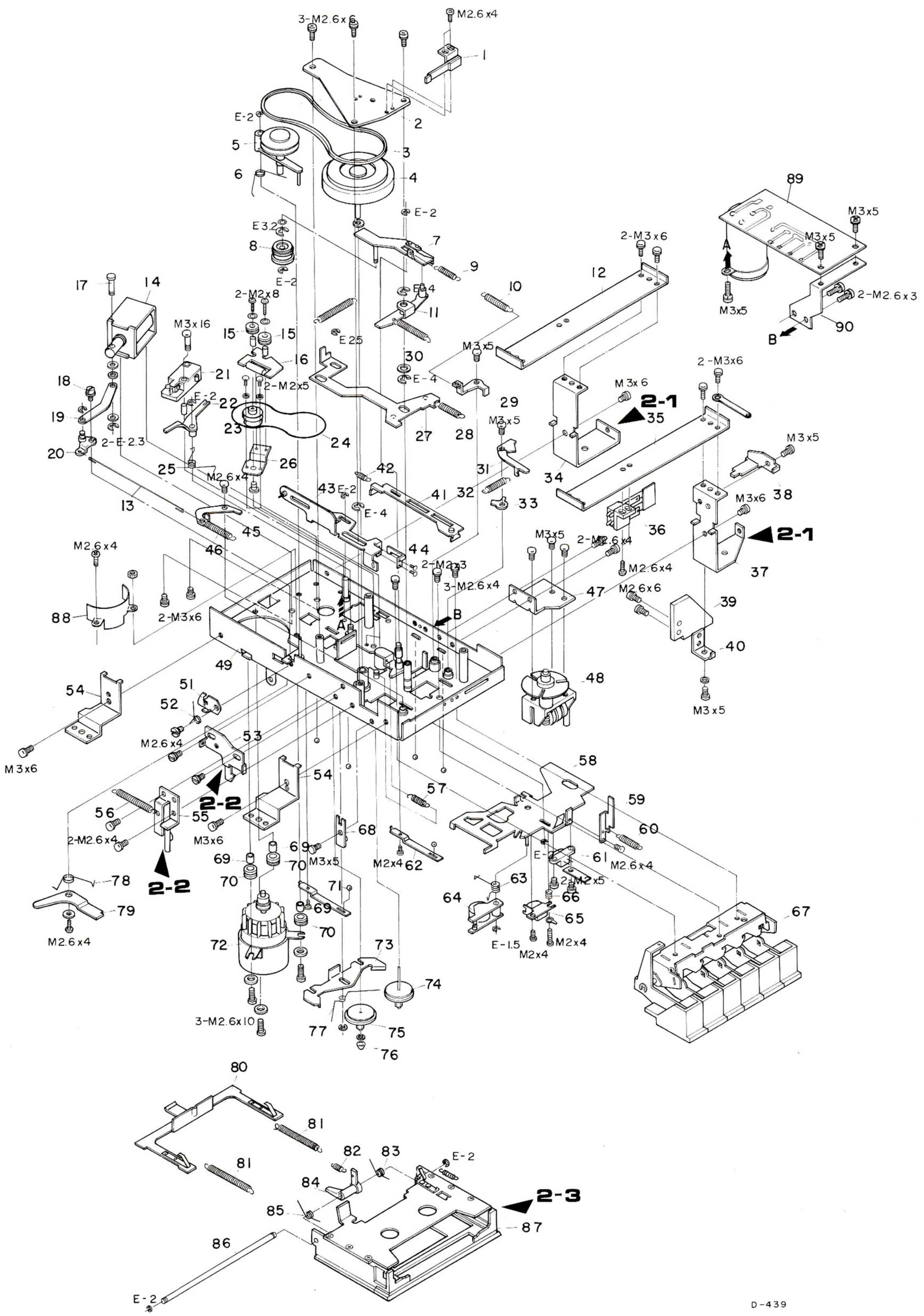

D-439

DOLBY CIRCUIT AMPLIFIER
A-350

CIRCUIT REF.NO.	TEAC PARTS NO.	DESCRIPTION	1st	2nd	3rd
3-26	50489850	PC Board Assy, Dolby Circuit Amplifier			
	50483210	PC Board, Dolby Circuit Amp.			
	SILICON TRANSISTORS				
Q601/701	50423610	2SC828H(Q) or	50423610 2SC828(Q) or		
	50423620	2SC828H(R)	50423620 2SC828(R)		
Q602/702	50423590	2SC644(S)			
Q603/703	50423590	2SC644(S)			
Q604/704	50424770	FET 2SK30(R)			
Q605/705	50423590	2SC644(S)			
Q606/706	50423790	2SA564(Q)			
Q607/707	50423610	2SC828H(Q) or	50423610 2SC828(Q) or		
	50423620	2SC828H(R)	50423620 2SC828(R)		
	DIODES				
D601/701	50422170	IN60			
D602/702	50422580	Zener RD-6A			
D603/703	50422170	IN60			
D604/704	50422330	M8513A-0			
	CARBON RESISTORS				
ALL RESISTORS IN OHM, 10% TOLERANCE, 1/4 WATT UNLESS OTHERWISE NOTED.					
R601/701	50515410	3.3k			
R602/702	50515450	5.6k			
R603/703	50515540	22k			
R604/704	50515570	33k			
R605/705	50515400	2.7k			
R606/706	50515570	33k			
R607/707	50515600	150k			
R608/708	50515720	390k			
R609/709	50515560	27k			
R610/710	50515480	8.2k			
R611/711	50515600	150k			
R612/712	50515400	2.7k			
R613/713	50515570	33k			
R614/714	50515030	3.3k			
R615/715	50515410	3.3k			
R616/716	50515480	39k			
R617/717	50515470	6.8k			
R618/718	50515490	10k			
R619/719	50515220	100			
R620/720	50515730	470k			
R621/721	50515510	15k			
R622/722	50515480	8.2k			
R623/723	50515480	8.2k			

www.hifiengine.com

DOLBY CIRCUIT AMPLIFIER
A-350

CIRCUIT REF.NO.	TEAC PARTS NO.	DESCRIPTION	1st	2nd	3rd
R624/724	50515440	4.7k			
R625/725	50515570	33k			
R626/726	50515490	10k			
R627/727	50515730	470k			
R628/728	50515680	220k			
R629/729	50515170	47			
R630/730	50515340	1k			
R631/731	50515090	10			
R632/732	50515400	2.7k			
R634/734	50515510	15k			
R635/735	50515700	270k			
R636/736	50515700	270k			
R637/737	50515620	68k			
R638/738	50515490	10k			
R639/739	50515350	1.2k			
	TRIMMER RESISTORS				
VR601/701	50533460	SV-4.7k (B)			
VR602/702	50533530	SV-1k (B)			
	COILS				
L601/701	50566600	Choke 26mH			
L602/702	50566600	Choke 26mH			
	CAPACITORS				
ALL CAPACITORS IN MICRO FARADS UNLESS OTHERWISE NOTED.					
C601/701	50554390	Elec. 220 16V			
C602/702	50549440	Mylar 0.0068 50V			
C603/703	50549430	Mylar 0.0039 50V			
C604/704	50549420	Mylar 0.0027 50V			
C605/705	50554270	Elec. 10 16V			
C606/706	50554270	Elec. 10 16V			
C607/707	50554270	Elec. 10 16V			
C608/708	50554270	Elec. 10 16V			
C609/709	50548260	Mylar 0.0056 50V			
C610/710	50548330	Mylar 0.027 50V			
C611/711	50548130	Mylar 0.0047 50V			
C612/712	50554270	Elec. 10 16V			
C613/713	50548520	Mylar 0.1 50V			
C614/714	50554010	Elec. 47 10V			
C615/715	50546160	Aluminum 0.47 16V			
C616/716	50548520	Mylar 0.1 50V			
C617/717	50548520	Mylar 0.1 50V			
C618/718	50554270	Elec. 10 16V			
C619/719	50548520	Mylar 0.1 50V			
C620/720	50549150	Aluminum 0.33 6.3V			

www.hifiengine.com

SCHEMATIC DIAGRAM

A-110

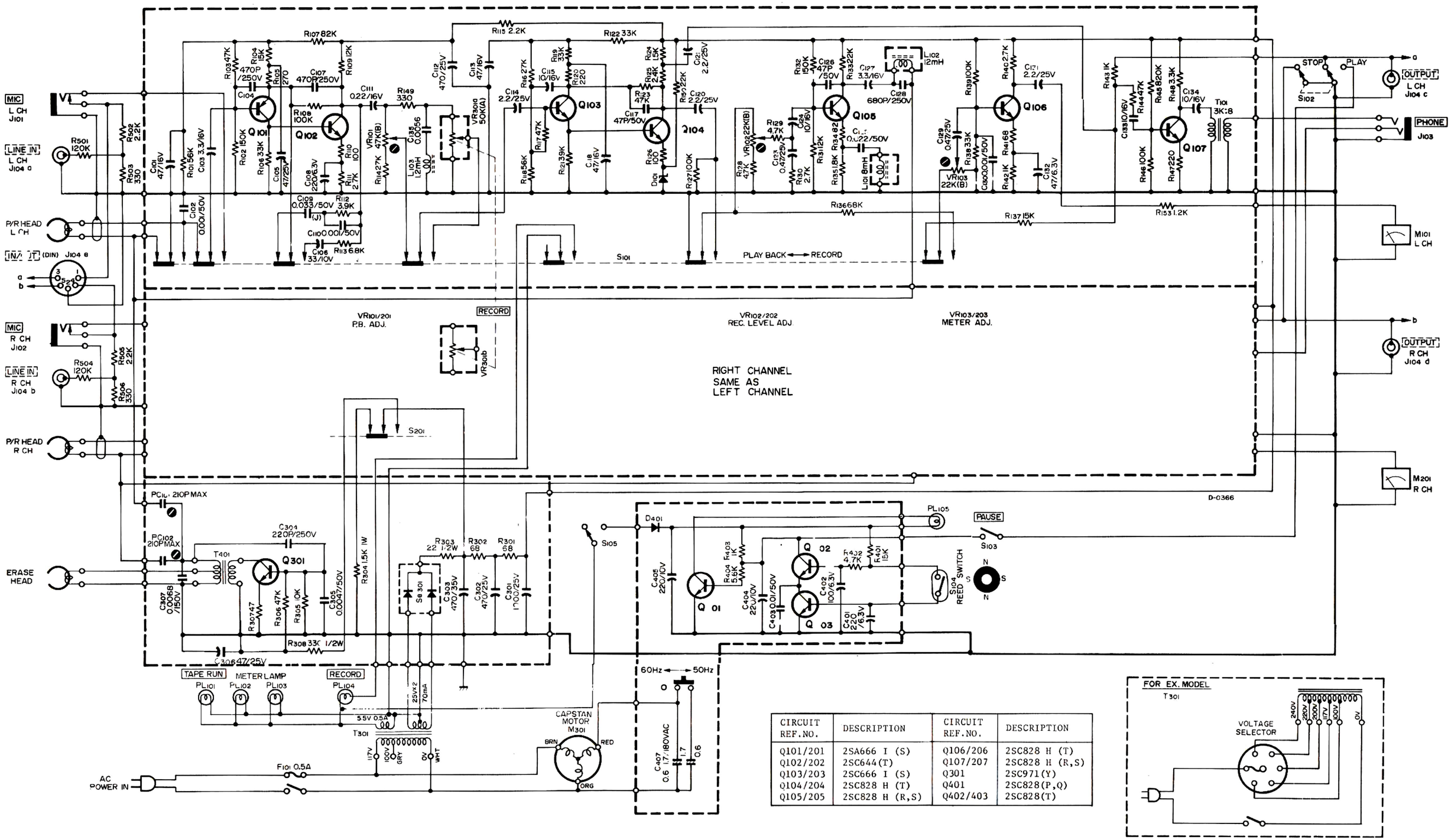

CIRCUIT REF.NO.	DESCRIPTION	CIRCUIT REF.NO.	DESCRIPTION
Q101/201	2SA666 I (S)	Q106/206	2SC828 H (T)
Q102/202	2SC644(T)	Q107/207	2SC828 H (R,S)
Q103/203	2SC666 I (S)	Q301	2SC971(Y)
Q104/204	2SC828 H (T)	Q401	2SC828(P,Q)
Q105/205	2SC828 H (R,S)	Q402/403	2SC828(T)

SCHEMATIC DIAGRAM

A-120

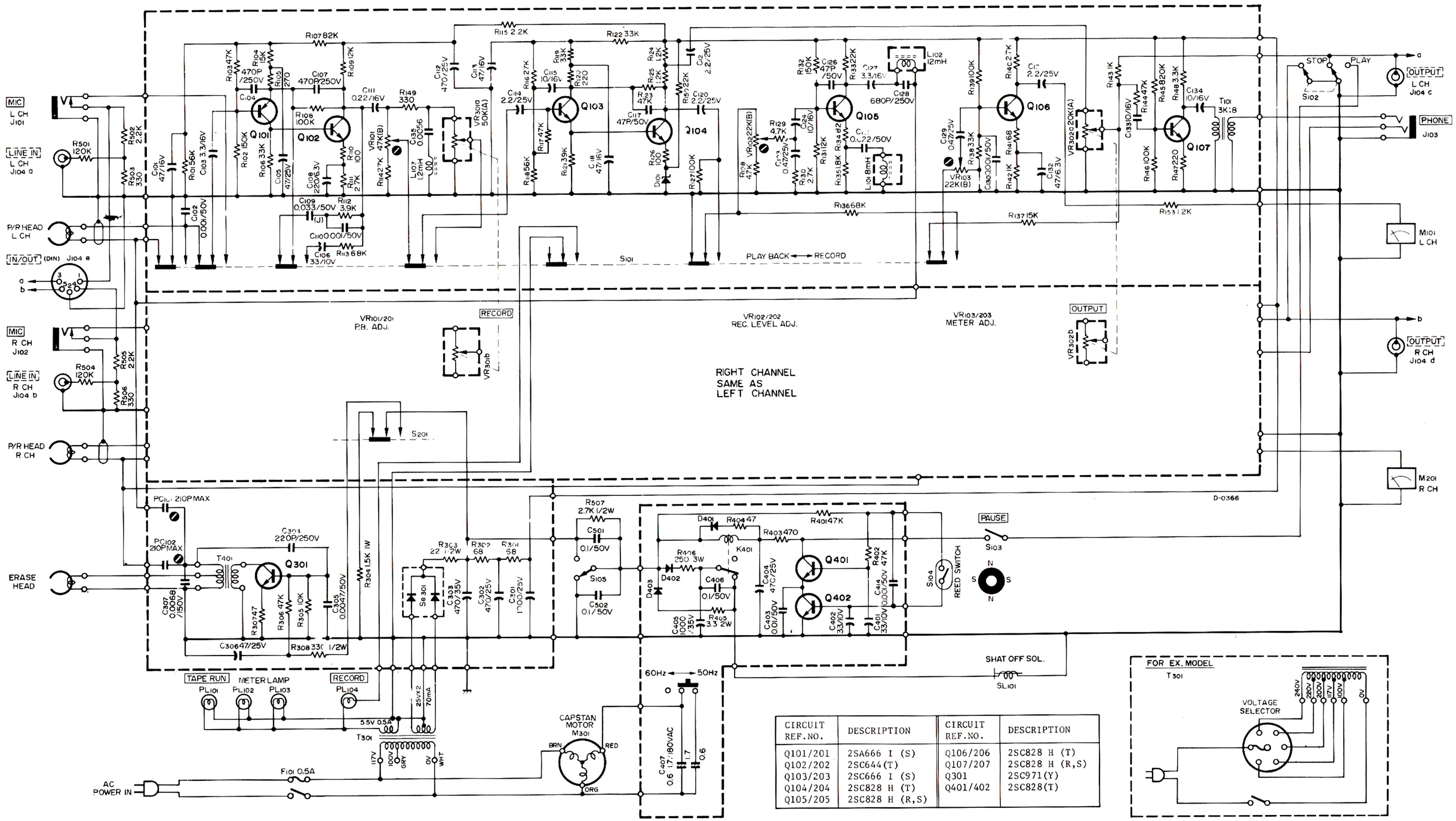

CIRCUIT REF.NO.	DESCRIPTION	CIRCUIT REF.NO.	DESCRIPTION
Q101/201	2SA666 I (S)	Q106/206	2SC828 H (T)
Q102/202	2SC644(T)	Q107/207	2SC828 H (R,S)
Q103/203	2SC666 I (S)	Q301	2SC971(Y)
Q104/204	2SC828 H (T)	Q401/402	2SC828(T)
Q105/205	2SC828 H (R,S)		

MAIN CHASSIS *(CONTINUED*

A-350

PARTIAL

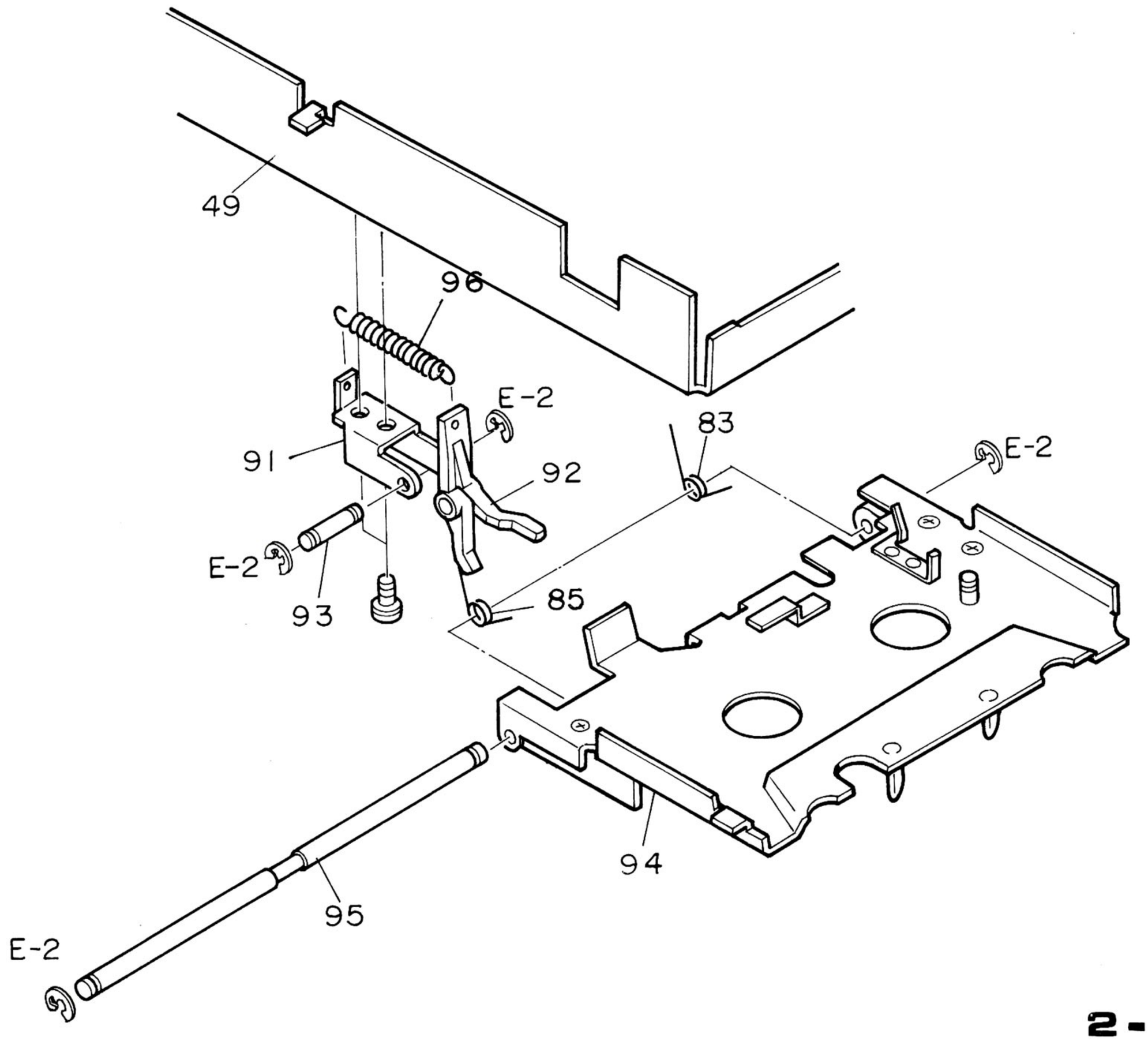

CIRCUIT REF.NO.	TEAC PARTS NO.	DESCRIPTION	1st	2nd	3rd
[2-3]					
2-49	50825990	Chassis Assy			
2-83	50827980	Spring, Cassette Holder, B			
2-85	50827970	Spring, Cassette Holder, A			
2-91	50829070	Arm Bracket			
2-92	50829060	Cassette Retaining Arm			
2-93	50829020	Arm Shaft			
2-94	50828910	Cassette Carrier Assy			
2-95	50829050	Cassette Carrier Shaft			
2-96	50820900	Spring, Cassette Retaining Arm			

www.hifiengine.com

PREAMPLIFIER CHASSIS

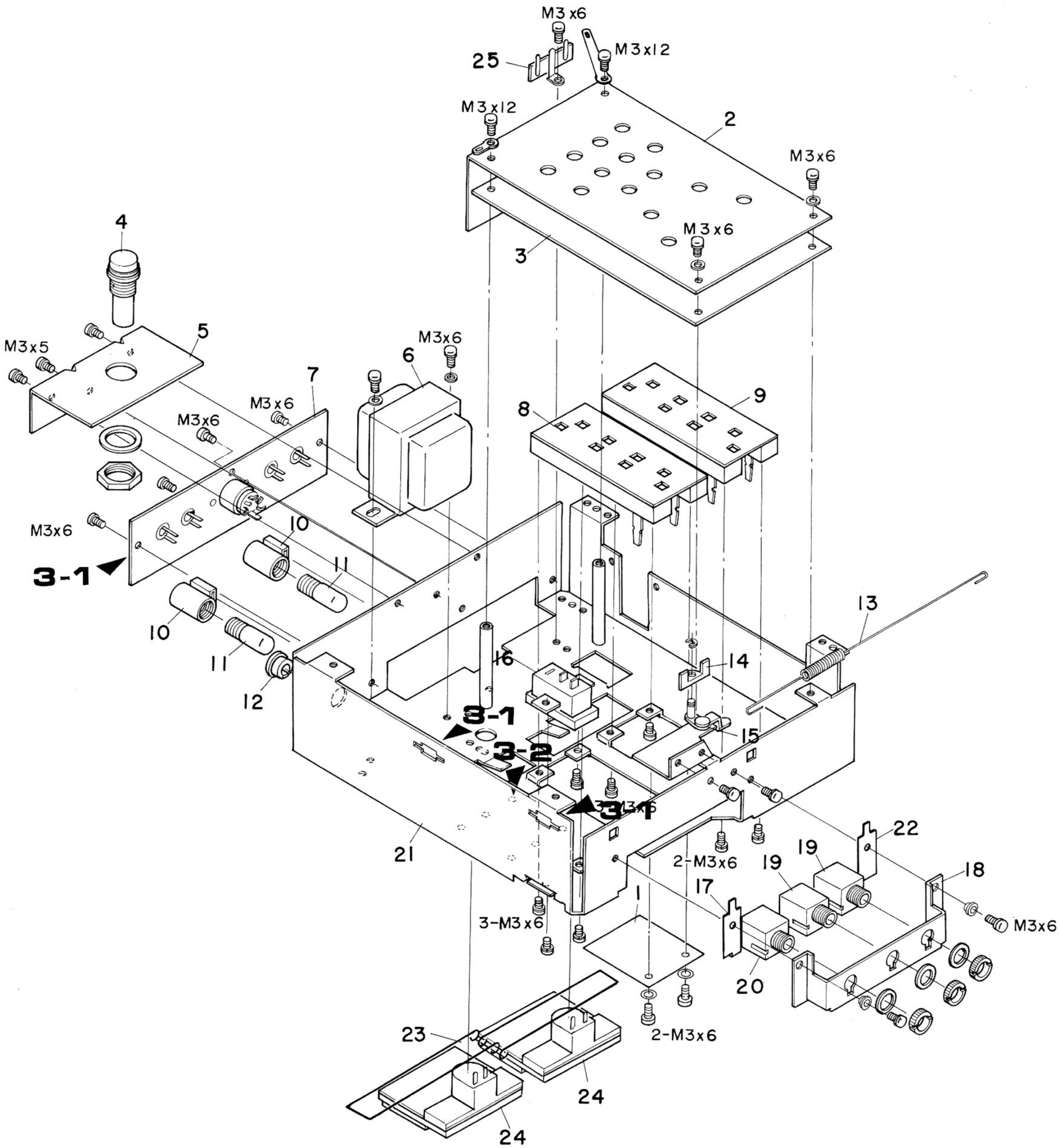

www.hifiengine.com

PREAMPLIFIER CHASSIS

REF. NO.	TEAC PARTS NO.	DESCRIPTION	1st	2nd	3rd
3- 1	50330910	Shield Paper, Small			
3- 2	50330900	Shield Paper, Large			
3- 3	50489790	PC Board Assy Preamp. (A-110)			
	50489800	PC Board Assy Preamp. (A-120)			
	50489811	PC Board Assy Preamp. (A-330)			
	50489822	PC Board Assy Preamp. (A-350)			
3- 4	50412170	Fuse Holder			
3- 5	50828231	Bracket, Fuse Holder(DM)			
	50828241	Bracket, Voltage Selector(EX)			
3- 6	50561980	Transformer, Power			
3- 7	50451300	Pin Jack Strip			
3- 8	50535230	Linear Potentiometer, 20kA × 2			
3- 9	50535220	Linear Potentiometer, 50kA × 2			
3-10	50431140	Socket, Lamp			
3-11	50414131	Lamp, 8V			
3-12	50271670	Grommet			
3-13	50826720	Spring, Rec SW			
3-14					
3-15					
3-16	50447250	SW, Rocker			
3-17	50828170	Insulator Plate, A			
3-18	50828150	Mount Bracket, Jack			
3-19	50430230	Phone Jack, Microphone, 2 cond			
3-20	50432440	Phone Jack, Headphone, 3 cond			
3-21	50827991	Amp Chassis Assy			
3-22	50828180	Insulator Plate, B			
3-23	50828190	Meter Cushion			
3-24	50581331	VU Meter	50581401		
3-25	50452170	Terminal Strip, 1L2P			

www.hifiengine.com

PREAMPLIFIER CHASSIS

PARTIAL

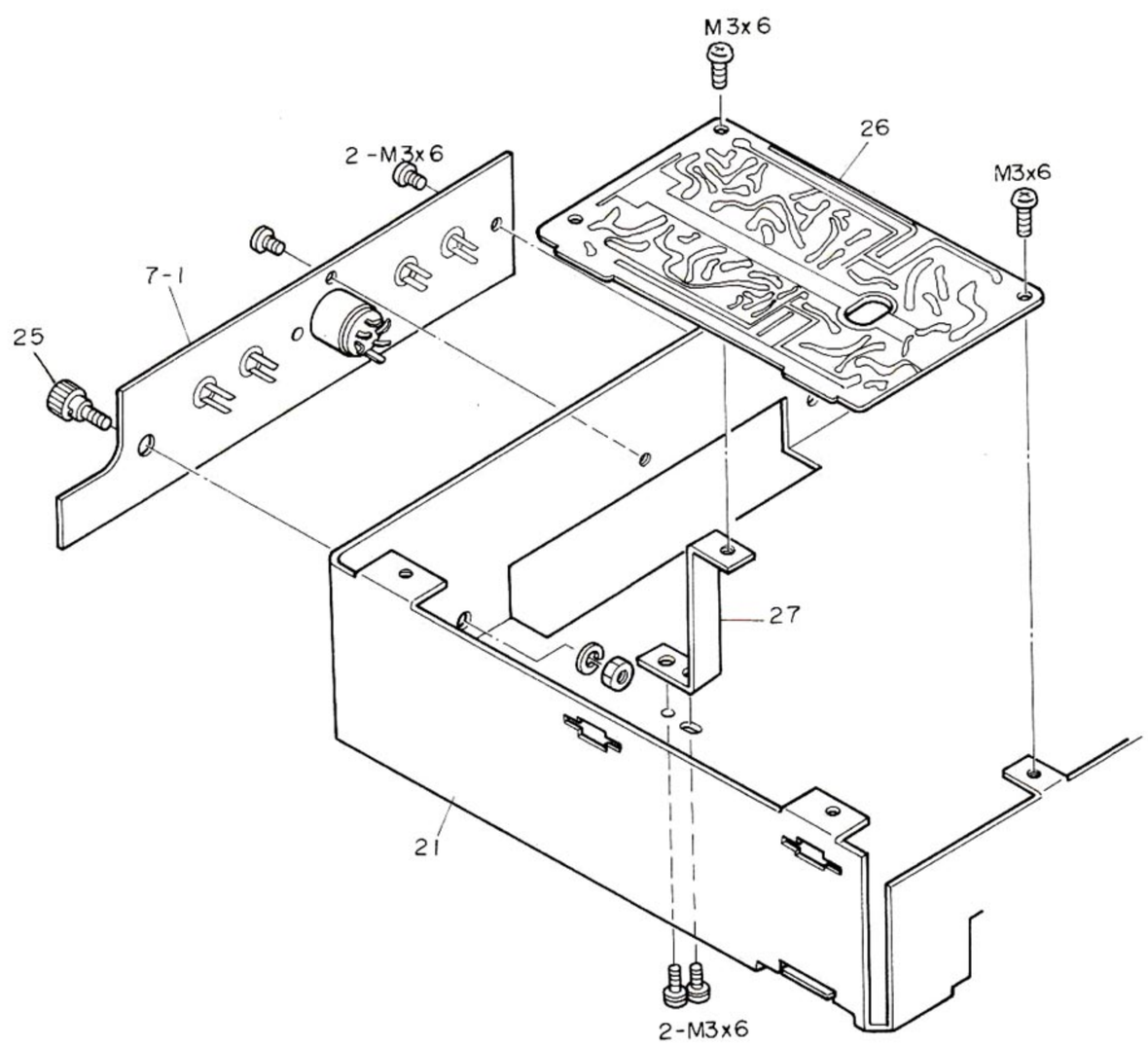

3-1

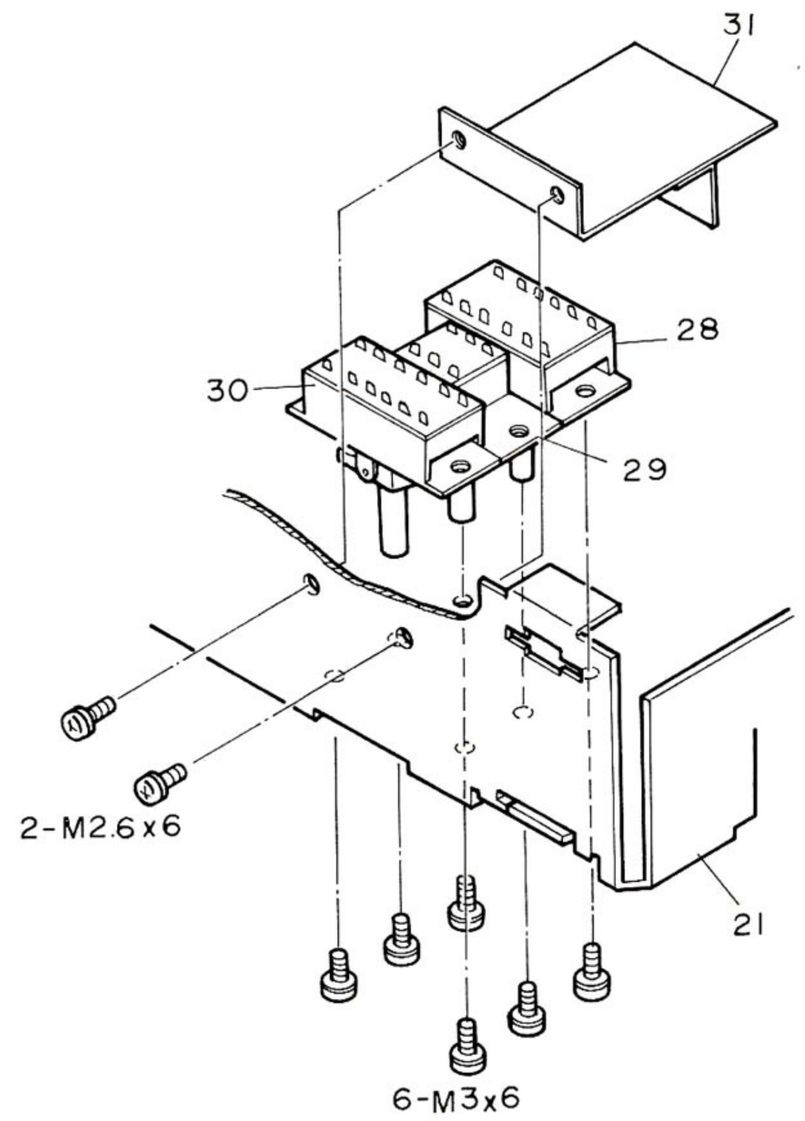

3-2

REF. NO.	TEAC PARTS NO.	DESCRIPTION	1st	2nd	3rd
[3-1]					
3- 7-1	50451280	Pin Jack Strip			
3-21	50827991	Amp Chassis Assy			
3-25	50454071	GND Terminal			
3-26	50489850	PC Board Assy, Dolby Circuit Amp(A-350)			
3-27	50828860	Mount Bracket, PC Board, E			
[3-2]					
3-21	50827991	Amp Chassis Assy			
3-28	50447210	SW, Toggle, A			
3-29	50447220	SW, Toggle, B			
3-30	50447230	SW, Toggle, C			
3-31	50829280	L Bracket	Removed		

www.hifiengine.com

PRINTED CIRCUIT BOARD AND PARTS LIST

FOR **A-110, A-120, A-330 AND A-350**

TEAC CORPORATION

www.hifiengine.com

PREAMPLIFIER

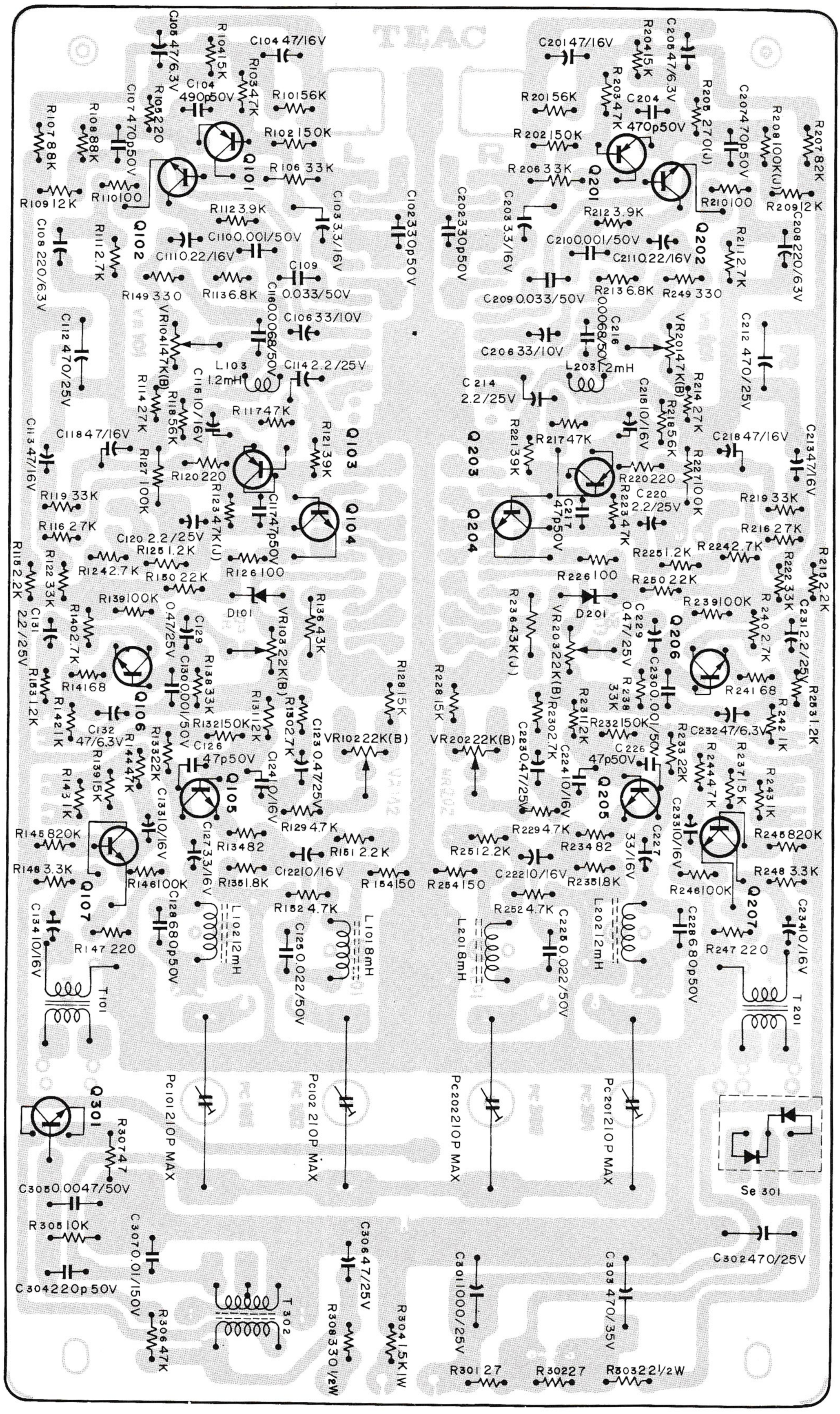

PREAMPLIFIER

CIRCUIT REF.NO.	TEAC PARTS NO.	DESCRIPTION	1st	2nd	3rd
3-3	50489822	PC Board Assy, Preamplifier(A-350)			
	50489810	PC Board Assy, Preamplifier(A-330)			
	50483200	PC Board, Preamplifier			
		SILICON TRANSISTORS			
Q101/201	50424210	2SA666I(S)			
Q102/202	50423770	2SC644(T)			
Q103/203	50424210	2SA666I(S)			
Q104/204	50424230	2SC828H(T)	50423770 2SC644(T)		
Q105/205	50424220	2SC828H(S) or	50423770 2SC644(T)		
	50423620	2SC828H(R)			
Q106/206	50424230	2SC828H(T)	50424230 2SC828(T)		
Q107/207	50424220	2SC828H(S) or	50424220 2SC828(R) or		
	50423620	2SC828H(R)	50423620 2SC828(S)		
Q301	50423880	2SC971(Y)			
		DIODE			
D101/201	50422580	Zener, 02Z 6.2A or RD6A			
		CARBON RESISTORS			
		ALL RESISTORS IN OHM, 10% TOLERANCE, 1/4 WATT UNLESS OTHERWISE NOTED.			
R101/201	50515610	56k			
R102/202	50515660	150k			
R103/203	50515590	47k			
R104/204	50515510	15k			
R105/205	50570680	270 (A-330 only)			
	50570660	220 (A-350 only)			
R106/206	50515570	33k			
R107/207	50515630	82k			
R108/208	50571300	100k			
R109/209	50515500	12k			
R110/210	50515220	100			
R111/211	50515400	2.7k			
R112/212	50515430	3.9k			
R113/213	50515470	6.8k			
R114/214	50515580	39k			
R115/215	50515380	2.2k			
R116/216	50515560	27k			
R117/217	50515590	47k			
R118/218	50515610	56k			
R119/219	50515570	33k			

www.hifiengine.com

PREAMPLIFIER *(CONTINUED)*

CIRCUIT REF.NO.	TEAC PARTS NO.	DESCRIPTION	1st	2nd	3rd
R120/220	50515706	220			
R121/221	50515580	39k			
R122/222	50515570	33k			
R123/223	50571220	47k			
R124/224	50515400	2.7k(A-120 only)			
	50515360	1.5k(A-110 only)			
R125/225	50515350	1.2k(except for A-110)			
	50570910	2.4k(A-110 only)			
R126/226	50515220	100			
R127/227	50515640	100k			
R128/228	50515440	4.7k(except for A-350)			
	50515510	15k(A-350 only)			
R129/229	50515440	4.7k			
R130/230	50515400	2.7k			
R131/231	50515500	12k			
R132/232	50515660	150k			
R133/233	50515540	22k			
R134/234	50515170	47(A-110/A-120)			
	50515210	82(A-330/A-350)			
R135/235	50515370	1.8k			
R136/236	50515620	68k(A-110/A-120)			
	50571210	43k(A-330/A-350)			
R137/237	50515510	15k			
R138/238	50515570	33k			
R139/239	50515640	100k			
R140/240	50515400	2.7k			
R141/241	50515200	68			
R142/242	50515340	1k			
R143/243	50515340	1k			
R144/244	50515590	47k			
R145/245	50515770	820k			
R146/246	50515640	100k			
R147/247	50515260	220			
R148/248	50515410	3.3k			
R149/249	50515280	330			
R150/250	50515540	22k			
R151/251	50515380	2.2k(A-330/A-350)	50515410 3.3kΩ		
R152/252	50515440	4.7k			
R153/253	50515350	1.2k			
R154/254	50515240	150(A-330/A-350)	50515300 470Ω		
R157/257			Added 50515460 5.6kΩ		
R301·302	50515200	68(except for A-350)			
	50515140	27(A-350 only)			
R303	50514200	22 1/2W			
R304	50527010	Metal Oxide Film 1.5k 1W			
R305	50515490	10k			
R306	50515590	47k			
R307	50515170	47			
R308	50514750	330 1/2W			

www.hifiengine.com

PREAMPLIFIER *(CONTINUED)*

CIRCUIT REF.NO.	TEAC PARTS NO.	DESCRIPTION	1st	2nd	3rd
	TRIMMER RESISTORS				
VR101/201	50533520	SV-47k B			
VR102/202	50533560	SV-22k B			
VR103/203	50533560	SV-22k B			
	CAPACITORS				
ALL CAPACITORS IN MICRO FARADS UNLESS OTHERWISE NOTED.					
C101/201	50554010	Elec. 47 16V	50554490 47μF 25V		
C102/202	50548320	Mylar 0.001 50V(A-110/A-120)			
	50543340	Polyst. 330p 50V(A-330/A-350)			
C103/203		Dipped Tantalum 3.3 16V	50546701 1μF 35V		
C104/204	50543530	Polyst. 470p 50V			
C105/205		Dipped Tantalum 47 6.3V	50554490 Elec. 47μF 25V		
C106/206	50554780	Elec. 33 10V			
C107/207	50543530	Polyst. 470p 50V			
C108/208	50554330	Elec. 220 6.3V			
C109/209	50549000	Mylar 0.033 50V			
C110/210	50548320	Mylar 0.001 50V			
C111/211	50546661	Dipped Tantalum 0.22 35V	50546651 0.15μF 35V		
C112/212	50554420	Elec. 470 25V			
C113/213	50554010	Elec. 47 16V			
C114/214	50554940	Elec. 2.2 25V			
C115/215	50554050	Elec. 10 16V			
C116/216	50549440	Mylar 0.0068 50V			
C117/217	50543480	Polyst. 47p 50V			
C118/218	50549800	Elec. 47 16V			
C119/219	50554940	Elec. 2.2 25V(except for A-350)			
C120/220	50554940	Elec. 2.2 25V			
C121/221					
C122/222	50554050	Elec. 10 16V(A-330/A-350)			
C123/223	50549650	Elec. 0.47 25V			
C124/224	50554050	Elec. 10 16V			
C125/225	50549000	Mylar 0.033 50V(A-110/A-120)			
	50548980	Mylar 0.022 50V(A-330/A-350)			
C126/226	50543480	Polyst. 47p 50V			
C127/227		Dipped Tantalum 3.3 16V			
C128/228	50543430	Polyst. 680p 50V			
C129/229	50549650	Elec. 0.47 25V			
C130/230	50548320	Mylar 0.001 50V			
C131/231	50554940	Elec. 2.2 25V			
C132/232	50554030	Elec. 47 6.3V			
C133/233	50554050	Elec. 10 16V			
C134/234	50554050	Elec. 10 16V			
C135/235			Added 50548240 Mylar 0.033μF 50V	50548270 0.047μF	
C136/236			Added 50548420 Mylar 0.015μF 50V(A-350)		

www.hifiengine.com

PREAMPLIFIER *(CONTINUED)*

CIRCUIT REF.NO.	TEAC PARTS NO.	DESCRIPTION		1st	2nd	3rd
C301	50554440	Elec.	1000 25V			
C302	50554420	Elec.	470 25V			
C303	50554620	Elec.	470 35V			
C304	50543060	Polyst.	220p 250V			
C305	50548910	Mylar	0.0047 50V			
C306	50554490	Elec.	47 25V			
C307	50548800	Mylar	0.0082 150V(A-110/A-120)			
	50548170	Mylar	0.01 150V(A-330/A-350)			
PC101/201	50547040	Trimmer	80p Max.(A-110/A-120)			
	50547020	Trimmer	210p Max.(A-330/A-350)			
PC102/202	50547020	Trimmer	210p Max. (A-330/A-350)	Omitted		
	MISCELLANEOUS					
T101/201	50562260	Transformer, Output 3k:8Ω				
S101/201	50444410	SW, Slide				
Se301	50422260	Silicon Stack, SIB02-C01				
T302	50563220	Transformer, Oscillator				
D501	50422680	Diode, Light Emitting	50422760			

www.hifiengine.com

END ALARM

A-110

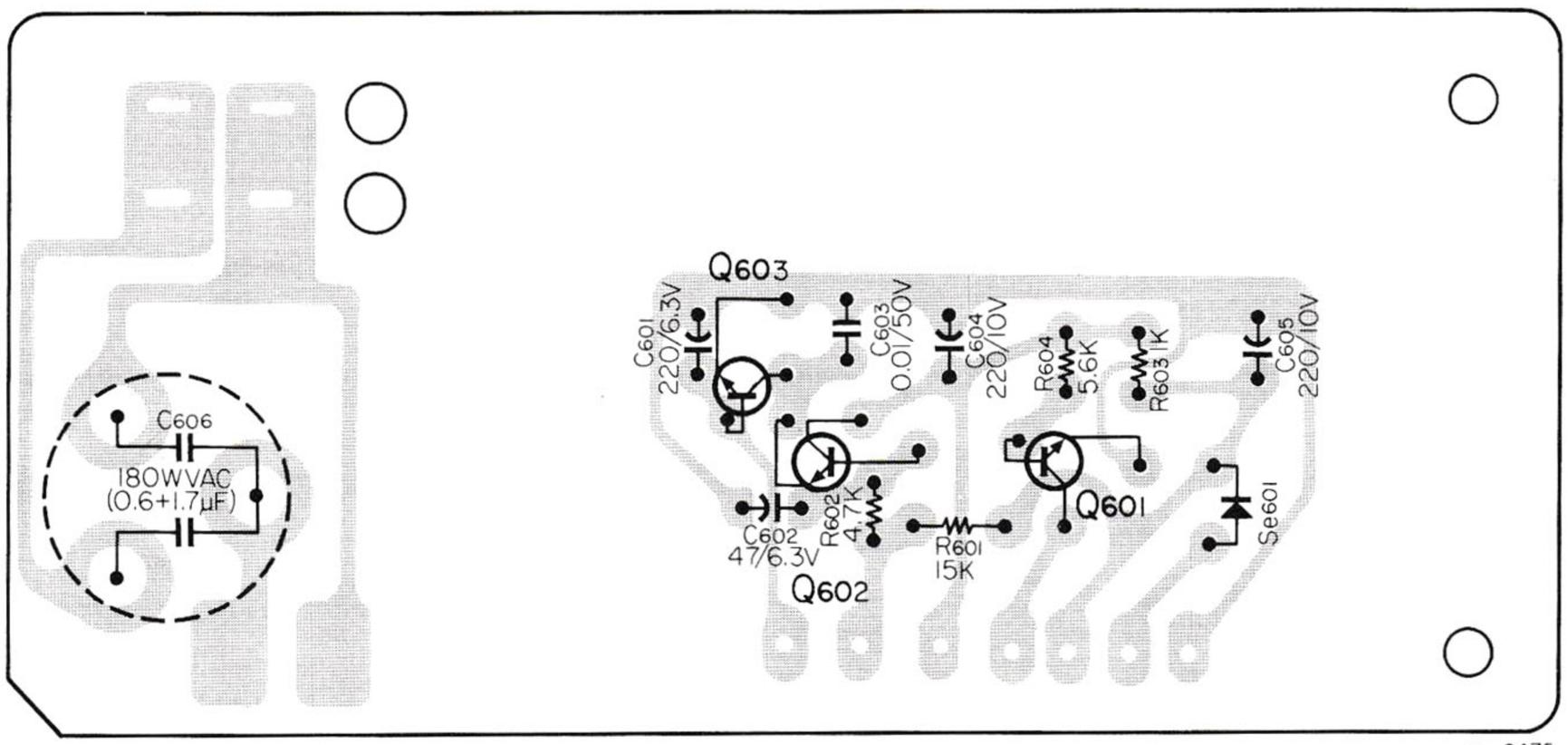

N-0475

CIRCUIT REF NO.	DESCRIPTION
Q601, 602, 603	2SC828(T)

CIRCUIT REF.NO.	TEAC PARTS NO.	DESCRIPTION	1st	2nd	3rd
2-89	50489870	PC Board Assy, End Alarm			
Q401	50423600	2SC828(P) or 50423610	2SC828(Q)		
Q402	50424230	2SC828(T)	50424590 2SC828A(T)		
Q403	50424230	2SC828(T)	50424590 2SC828A(T)		
D401	50422170	Diode, Silicon FR2-02			
R401	50515500	Carbon 15kΩ 1/4W 10%			
R402	50515440	Carbon 4.7kΩ 1/4W 10%			
R403	50515340	Carbon 1kΩ 1/4W 10%			
R404	50515460	Carbon 5.6kΩ 1/4W 10%			
C401	50554330	Elec. 220μF 6.3V			
C402	50554230	Elec. 100μF 6.3V			
C403	50548480	Mylar 0.01μF 50V			
C404	50554910	Elec. 220μF 10V			
C405	50554910	Elec. 220μF 10V			
C406	50545880	MP 1.7 + 0.6μF 180V			
S106	50444080	Switch, Slide 6P			

www.hifiengine.com

AUTO END STOP

A-120

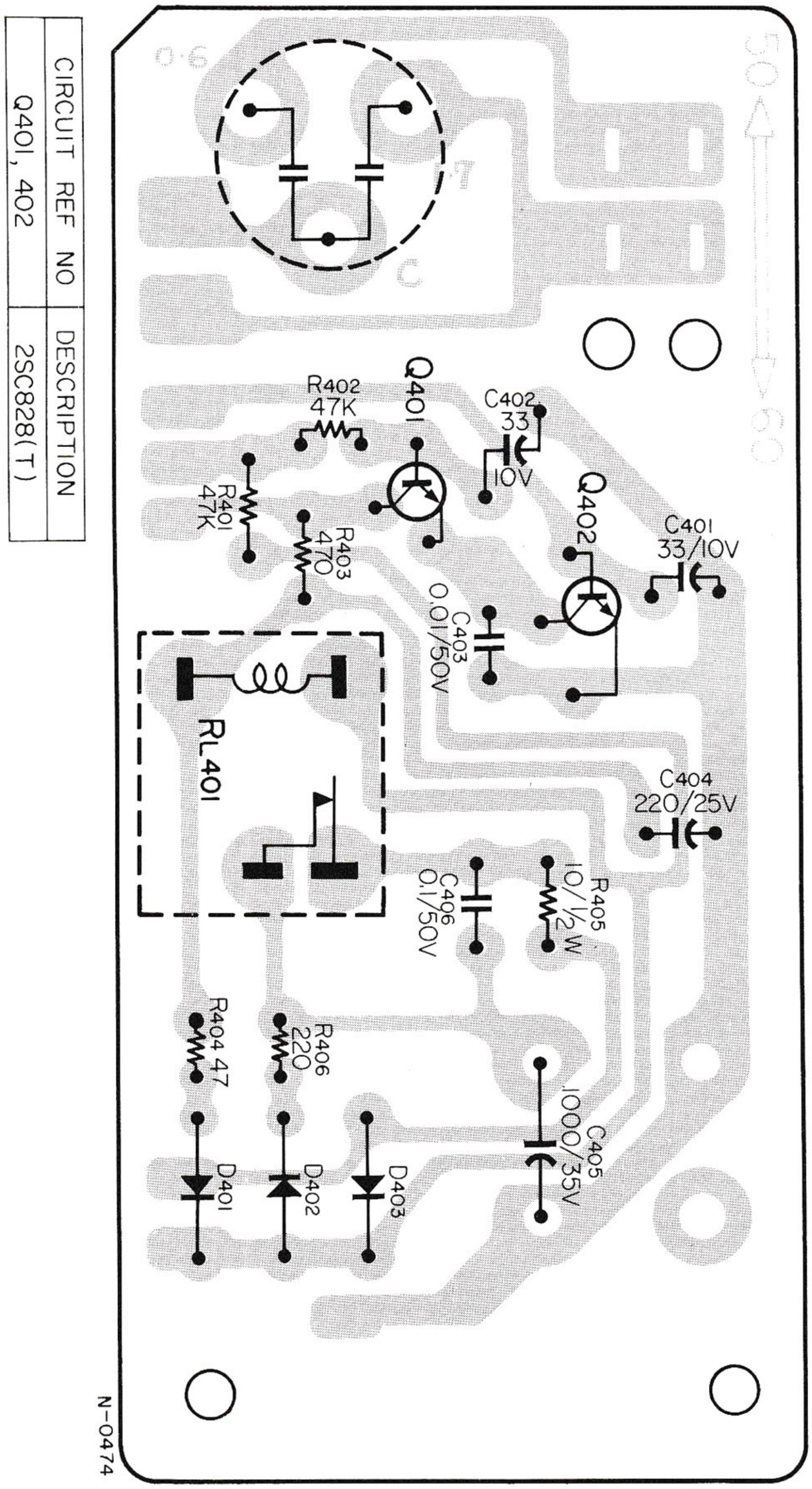

CIRCUIT REF NO	DESCRIPTION
Q401, 402	2SC828(T)

AUTO END STOP

A-120

CIRCUIT REF.NO.	TEAC PARTS NO.	DESCRIPTION	1st	2nd	3rd
2-89	50489860	PC Board Assy, Auto End Stop			
	50483240	PC Board, Auto End Stop			
		SILICON TRANSISTORS			
Q401	50424230	2SC828(T)	50424590	2SC828A(T)	
Q402	50424230	2SC828(T)	50424590	2SC828A(T)	
		RESISTORS			
ALL RESISTORS IN OHM 10% TOLERANCE, 1/4 WATT UNLESS OTHERWISE NOTED.					
R401	50515590	Carbon 47k			
R402	50515590	Carbon 47k			
R403	50515300	Carbon 470			
R404	50515170	Carbon 47			
R405	50525440	Wire Wound 3.3 2W			
R406	50527120	Metal Oxide Film 250 3W			
		SILICON DIODES			
D401	50422340	FR2-02			
D402	50422340	FR2-02			
D403	50422340	FR2-02			
		CAPACITORS			
ALL CAPACITORS IN MICRO FARADS UNLESS OTHERWISE NOTED.					
C401	50554270	Elec. 33 10V			
C402	50554270	Elec. 33 10V			
C403	50548480	Mylar 0.01 50V			
C404	50554180	Elec. 470 25V			
C405	50554740	Elec. 1000 35V			
C406	50548040	Mylar 0.1 50V			
C407	50545880	MP 0.6 + 1.7 180V			
C414	50548320	Mylar 0.001 50V			
		MISCELLANEOUS			
RL401	50610671	Relay, Midget 1B			
S106	50444080	Switch, Slide 6P			

www.hifiengine.com

AUTO END STOP

A-330 / A-350

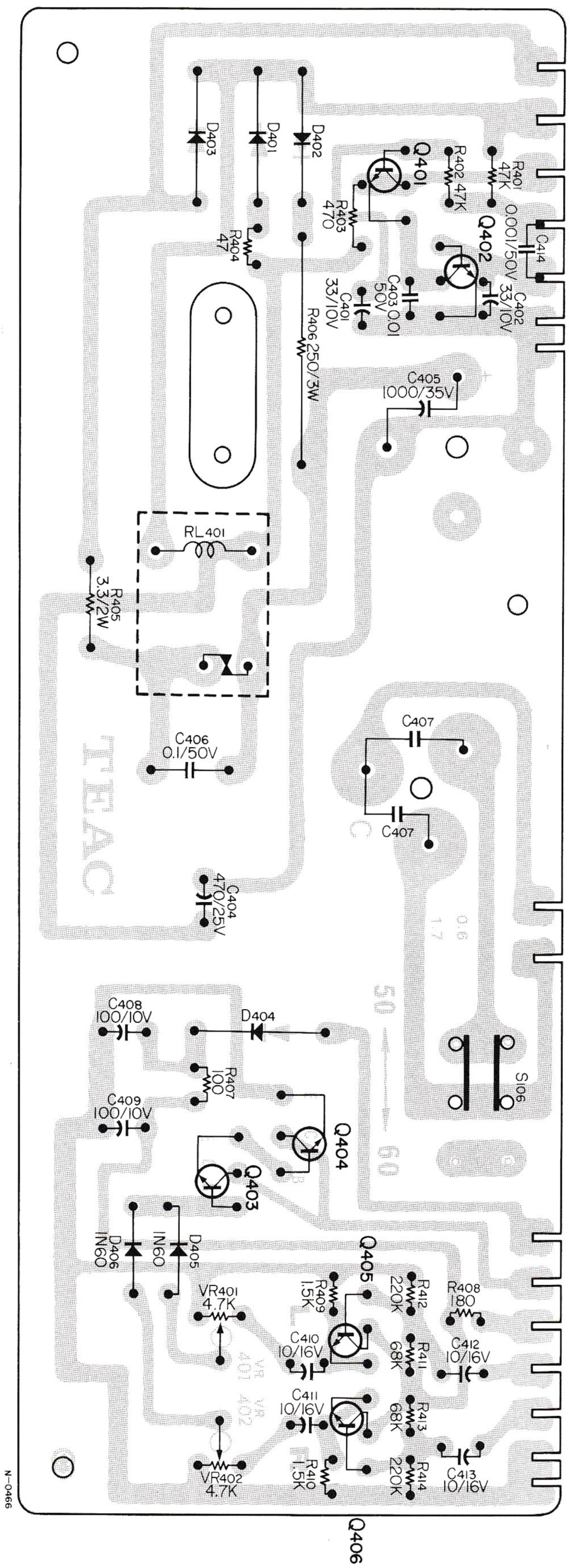

AUTO END STOP

A-330 / A-350

CIRCUIT REF.NO.	TEAC PARTS NO.	DESCRIPTION	1st	2nd	3rd
2-89	50489830	PC Board Assy, Auto End Stop			
	50483220	PC Board Auto End Stop			
		SILICON TRANSISTORS			
Q401/402	50424230	2SC828(T)	50424590 2SC828A(T)		
Q403/404	50424230	2SC828(T)	50424590 2SC828A(T)		
Q405/406	50423610	2SC828(Q) or			
	50423620	2SC828(R)			
		DIODES			
D401	50422340	Silicon, FR2-02			
D402	50422340	Silicon, FR2-02			
D403	50422340	Silicon, FR2-02			
D404	50422340	Silicon, FR2-02			
D405	50422170	IN60			
D406	50422170	IN60			
		RESISTORS			
		ALL RESISTORS IN OHM, 10% TOLERANCE, 1/4 WATT UNLESS OTHERWISE NOTED.			
R401	50515590	Carbon 47k			
R402	50515590	Carbon 47k			
R403	50515300	Carbon 470			
R404	50515170	Carbon 47			
R405	50526070	Wire Wound 3.3 2W			
R406	50527120	Metal Oxide Film 250 3W			
R407	50515220	Carbon 100			
R408	50515250	Carbon 180			
R409	50515360	Carbon 1.5k			
R410	50515360	Carbon 1.5k			
R411	50515620	Carbon 68k			
R412	50515680	Carbon 220k			
R413	50515620	Carbon 68k			
R414	50515680	Carbon 220k			
		CAPACITORS			
		ALL CAPACITORS IN MICRO FARADS UNLESS OTHERWISE NOTED.			
C401	50554270	Elec. 33 10V			
C402	50554270	Elec. 33 10V			
C403	50548480	Mylar 0.01 50V			
C404	50554420	Elec. 470 25V			
C405	50551370	Elec. 1000 35V			
C406	50548040	Mylar 0.1 50V			
C407	50545880	MP 0.6 + 1.7 180V			
C408	50554570	Elec. 100 10V			
C409	50554570	Elec. 100 10V			
C410	50554050	Elec. 10 16V			
C411	50554050	Elec. 10 16V			
C412	50554050	Elec. 10 16V			
C413	50554050	Elec. 10 16V			
C414	50548320	Mylar 0.001 50V			

www.hifiengine.com

DOLBY CIRCUIT AMPLIFIER

A-350

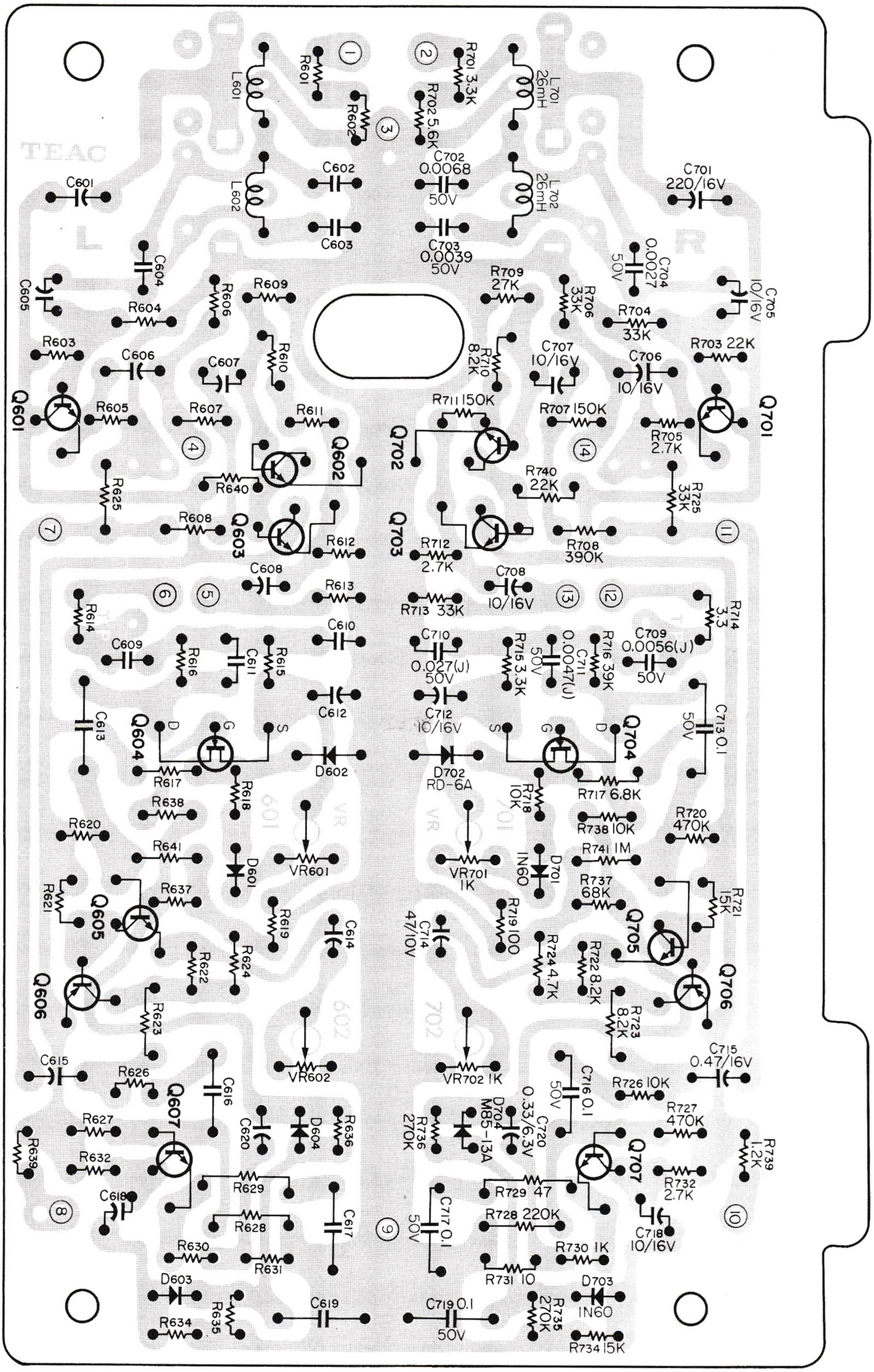

MAIN CHASSIS

REF. NO.	TEAC PARTS NO.	DESCRIPTION	1st	2nd	3rd
2- 1	50447270	SW, Pause			
2- 2	50829300	Flywheel Bearing Plate Assy			
2- 3	50827250	Belt, Capstan			
2- 4	50825951	Flywheel Assy			
2- 5	50826450	Tension Pulley Assy			
2- 6	50826460	Spring, Tension Lever			
2- 7	50826310	FR Lever Assy			
2- 8	50826350	Idler A Assy			
2- 9	50826692	Spring, Rewind			
2-10	50826680	Spring, Auto Stop Actuator Lever			
2-11	50826620	FF Lever Assy			
2-12	50828130	Reinforcing Plate, B			
2-13	50826540	Wire Linkage			
2-14	50826470	Solenoid			
2-15	50826590	Rubber Grommet, For Motor Mount			
2-16	50826570	Plate, Reed SW			
2-17	50826480	Pin, Solenoid			
2-18	50826530	Mount Screw			
2-19	50826490	Magnet Interlocking Arm			
2-20	50826500	Auto Stop Relay Lever Assy			
2-21	50446510	SW, Micro			
2-22	50826810	SW Lever Assy			
2-23	50827371	Pulley, Index Counter			
2-24	50274712	Belt, Index Counter			
2-25	50826830	Torsion Spring			
2-26	50827360	Reel Shaft Bearing Plate			
2-27	50826800	Brake Actuator Lever			
2-28	50826710	Spring, Case Hook Lever			
2-29	50826670	Rewind Lever, B			
2-30	50826650	Spring, FF Lever			
2-31	50826700	Rec SW Interlocking Lever			
2-32	50826710	Spring, Case Hook Lever			
2-33	50826660	Rewind Lever, A			
2-34	50828280	Mount Bracket, Case, B			
2-35	50828290	Reinforcing Angle			
2-36	50447240	SW, Leaf 1T1B			
2-37	50828270	Mount Bracket, Case, A			
2-38	50827690	Mount Bracket, Lamp			
2-39	50827670	Indicator Lens, B			
2-40	50827680	Mount Bracket, Lens			
2-41	50826730	Rec Safty Lever, A			
2-42	50826760	Spring, Rec Safty Lever A			
2-43	50826860	Pause Actuator Lever			
2-44	50826890	Pause Locking Bracket			
2-45	50826550	Auto Stop Actuator Lever			
2-46	50826560	Spring, Idler B Lever			
2-47	50827660	Mount Plate, Counter(A-110,120)			
	50829191	Mount Plate, Counter(A-330,350)			
2-48	50827630	Index Counter Assy (A-110,120)			
	50829251	Index Counter Assy(A-330,350)			
2-49	50826000	Chassis Assy			

Continue to the following page

www.hifiengine.com

MAIN CHASSIS *(CONTINUED)*

REF. NO.	TEAC PARTS NO.	DESCRIPTION	1st	2nd	3rd
2-51	50826950	Pause Lock Plate			
2-52	50826960	Tension Spring, Pause Lock			
2-53	50827770	Case Hook Lever			
2-54	50828310	Chassis Support Plate, B			
2-55	50827720	Eject Support Plate Assy			
2-56	50829130	Spring, Eject Lever			
2-57	50826560	Spring Idler B Lever			
2-58	50827000	Head Base Plate			
2-59	50827210	SW Actuator Plate			
2-60	50826901	Spring, Pause Lever			
2-61	50663070	Head, Erase			
2-62	50827190	Leaf Spring, Head Base			
2-63	50827180	Torsion Spring, Pinch Roller			
2-64	50827120	Pinch Roller Arm Assy			
2-65	50660410	Head, Record/Playback			
2-66	50827100	Spring, Rec/PB Head			
2-67	50827430	Push Button Assy			
2-68	50826910	Pause Interlocking Lever			
2-69	50826600	Spacer			
2-70	50826590	Rubber Grommet, Motor Mount			
2-71	50827200	Ball, 2ϕ, Detent Locking			
2-72	70701512	Motor			
2-73	50826780	Brake Lever			
2-74	50827330	Reel Table Assy, Left			
2-75	50827260	Reel Table Assy, Right			
2-76	50827320	Reel Table Cap			
2-77	50826790	Spring, Brake Lever			
2-78	50828260	Spring, Play Lock Lever			
2-79	50828250	Play Lock Lever			
2-80	50827820	Cassette Slide Plate			
2-81	50827852	Spring, Slide Plate			
2-82	50827960	Spring, Cassette Holder Lock			
2-83	50827980	Spring, Cassette Holder, B			
2-84	50827950	Cassette Holder Limit Arm			
2-85	50827970	Spring, Cassette Holder, A			
2-86	50827940	Cassette Holder Shaft			
2-87	50827790	Cassette Holder			
2-88	50825890	Motor Shield			
2-89	50489860	PC Board Assy, Auto End Stop (A-120 only)			
	50489870	PC Board Assy, End Alarm (A-110 only)			
2-90		Mount Bracket, PC Board			

www.hifiengine.com

MAIN CHASSIS *(CONTINUED)*

PARTIAL

A-350

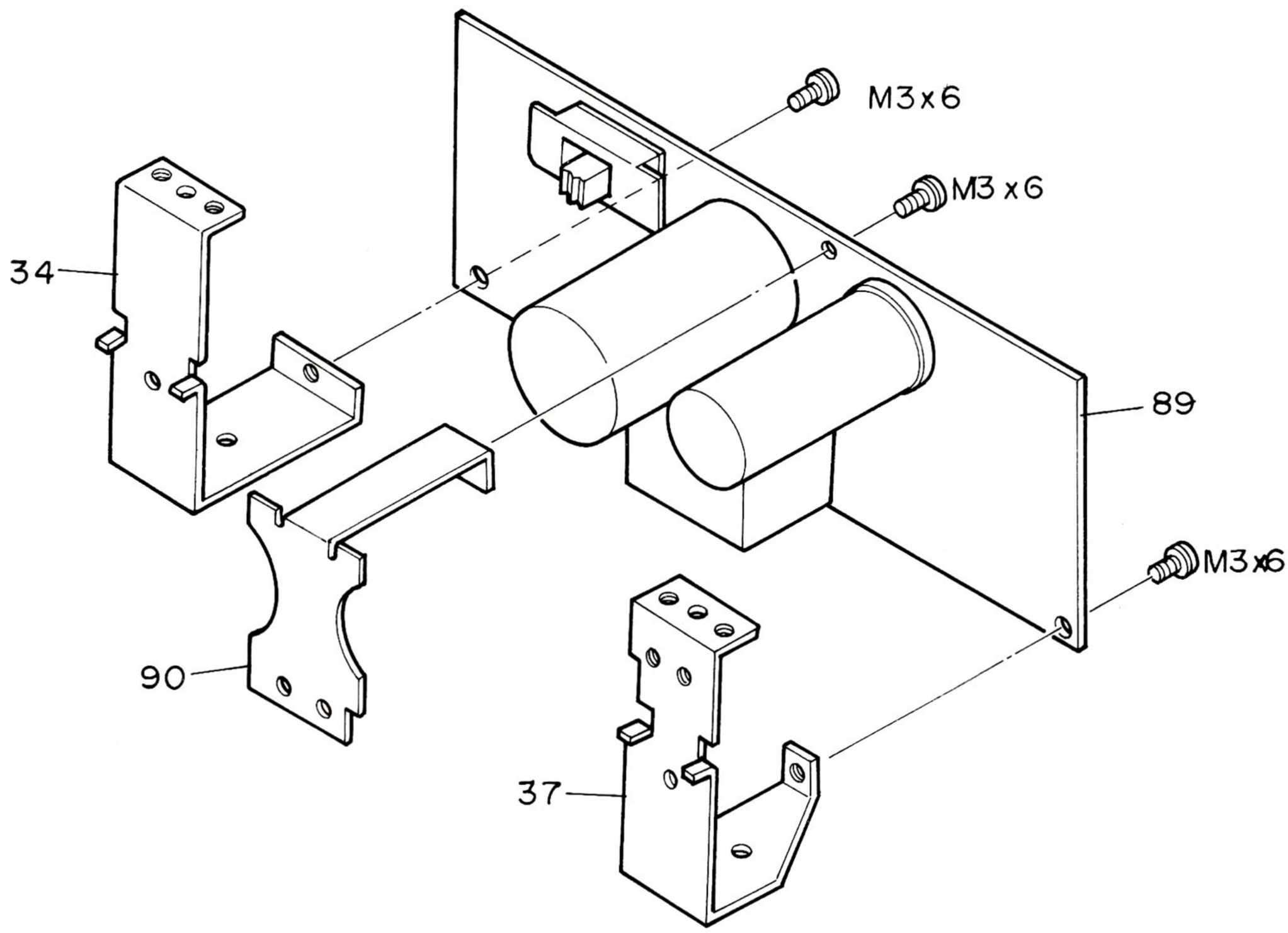

2-1

REF. NO.	TEAC PARTS NO.	DESCRIPTION	1st	2nd	3rd
[2-1]					
2-34	50828280	Mount Bracket, Case, B			
2-37	50828270	Mount Bracket, Case, A			
2-89	50489830	PC Board Assy, Auto End Stop			
2-90	50828871	Mount Bracket, D			

www.hifiengine.com

MAIN CHASSIS *(CONTINUED)*

PARTIAL

A-350

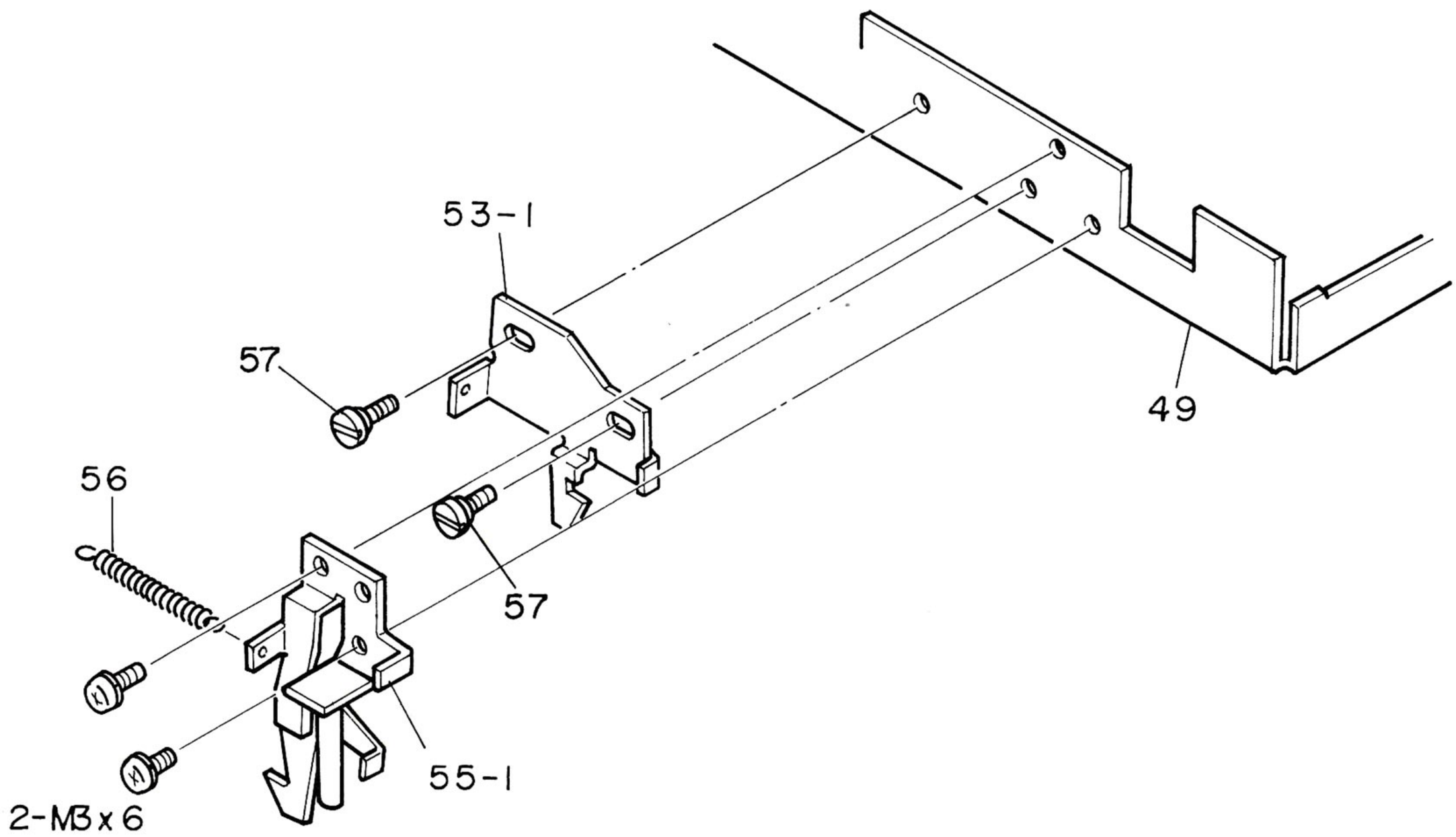

2-2

CIRCUIT REF.NO.	TEAC PARTS NO.	DESCRIPTION	1st	2nd	3rd
[2-2]					
2-49	50825990	Chassis Assy			
2-53-1	50829140	Case Hook Lever			
2-55-1	50829100	Eject Support Plate Assy			
2-56	50827780	Spring, Case Hook Lever			

www.hifiengine.com

SCHEMATIC DIAGRAM

A-330

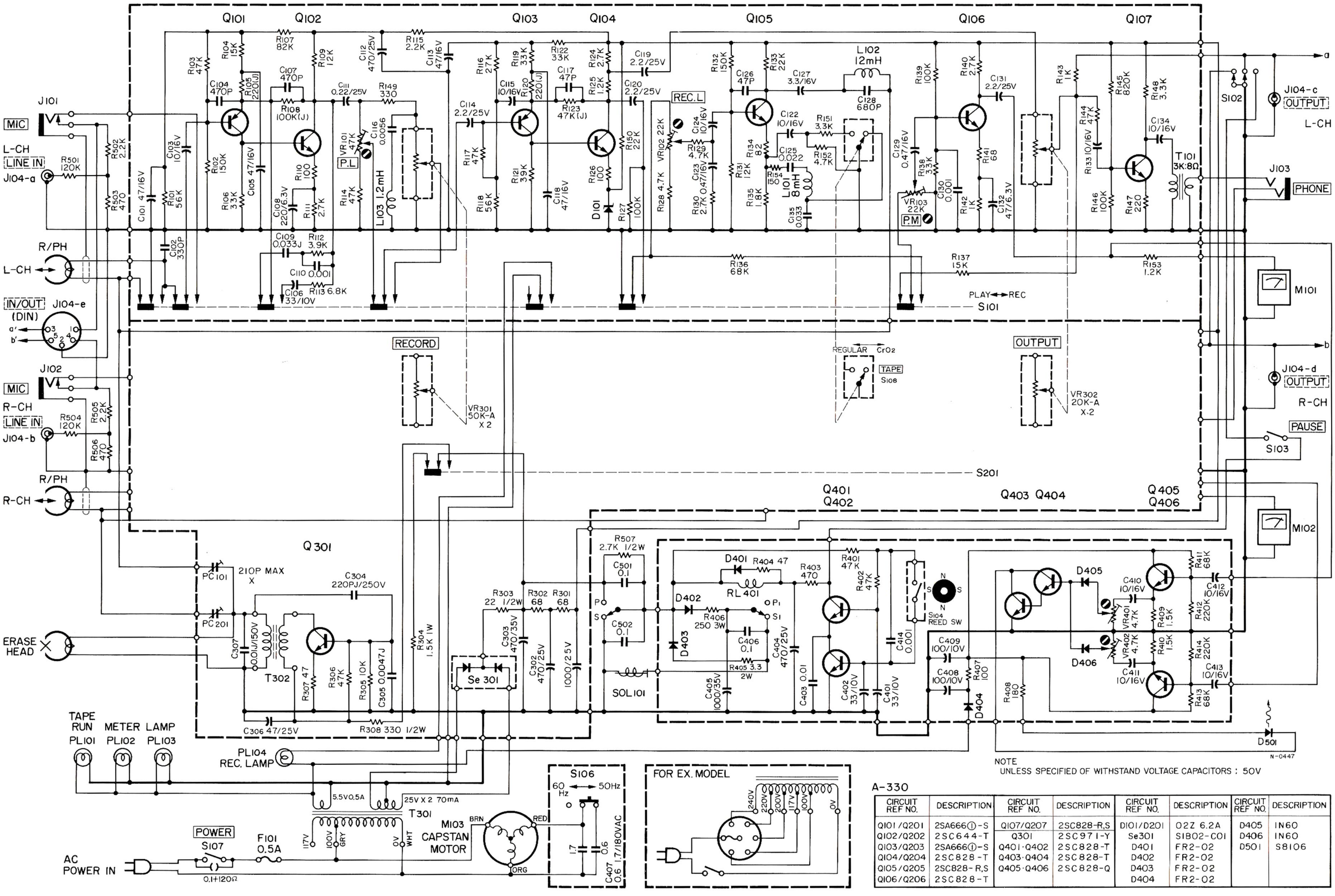

NOTE
UNLESS SPECIFIED OF WITHSTAND VOLTAGE CAPACITORS : 50V

A-330

CIRCUIT REF NO.	DESCRIPTION	CIRCUIT REF NO.	DESCRIPTION	CIRCUIT REF NO.	DESCRIPTION	CIRCUIT REF NO.	DESCRIPTION
Q101/Q201	2SA666①-S	Q107/Q207	2SC828-R,S	D101/D201	02Z 6.2A	D405	IN60
Q102/Q202	2SC644-T	Q301	2SC971-Y	Se301	SIB02-C01	D406	IN60
Q103/Q203	2SA666①-S	Q401·Q402	2SC828-T	D401	FR2-02	D501	S8106
Q104/Q204	2SC828-T	Q403·Q404	2SC828-T	D402	FR2-02		
Q105/Q205	2SC828-R,S	Q405·Q406	2SC828-Q	D403	FR2-02		
Q106/Q206	2SC828-T			D404	FR2-02		

SCHEMATIC DIAGRAM

A-350

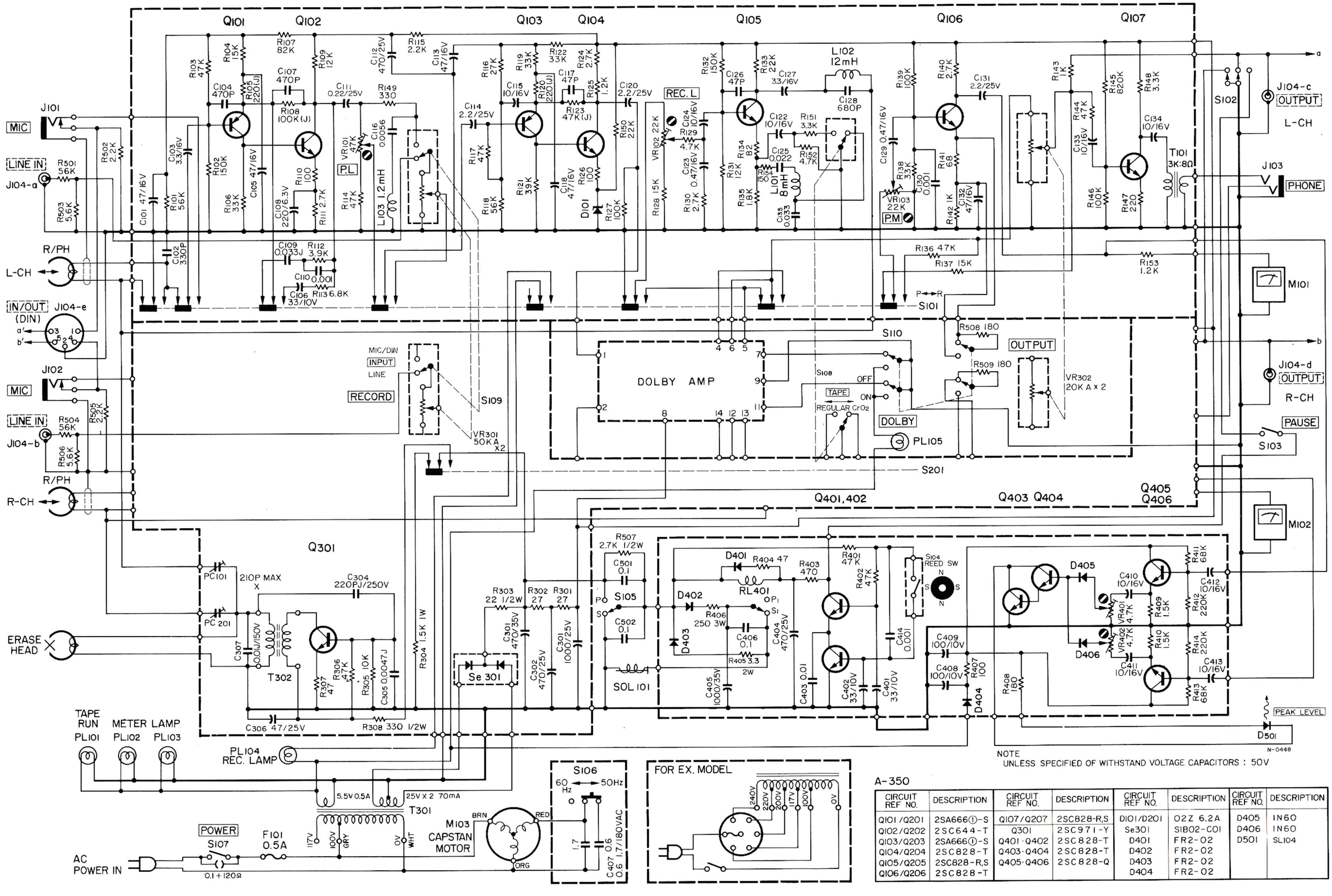

NOTE
UNLESS SPECIFIED OF WITHSTAND VOLTAGE CAPACITORS : 50V

A-350

CIRCUIT REF NO.	DESCRIPTION	CIRCUIT REF NO.	DESCRIPTION	CIRCUIT REF NO.	DESCRIPTION	CIRCUIT REF NO.	DESCRIPTION
Q101/Q201	2SA666①-S	Q107/Q207	2SC828-R,S	D101/D201	02Z 6.2A	D405	IN60
Q102/Q202	2SC644-T	Q301	2SC971-Y	Se301	SIB02-C01	D406	IN60
Q103/Q203	2SA666①-S	Q401·Q402	2SC828-T	D401	FR2-02	D501	SL104
Q104/Q204	2SC828-T	Q403·Q404	2SC828-T	D402	FR2-02		
Q105/Q205	2SC828-R,S	Q405·Q406	2SC828-Q	D403	FR2-02		
Q106/Q206	2SC828-T			D404	FR2-02		

SCHEMATIC DIAGRAM

A-350

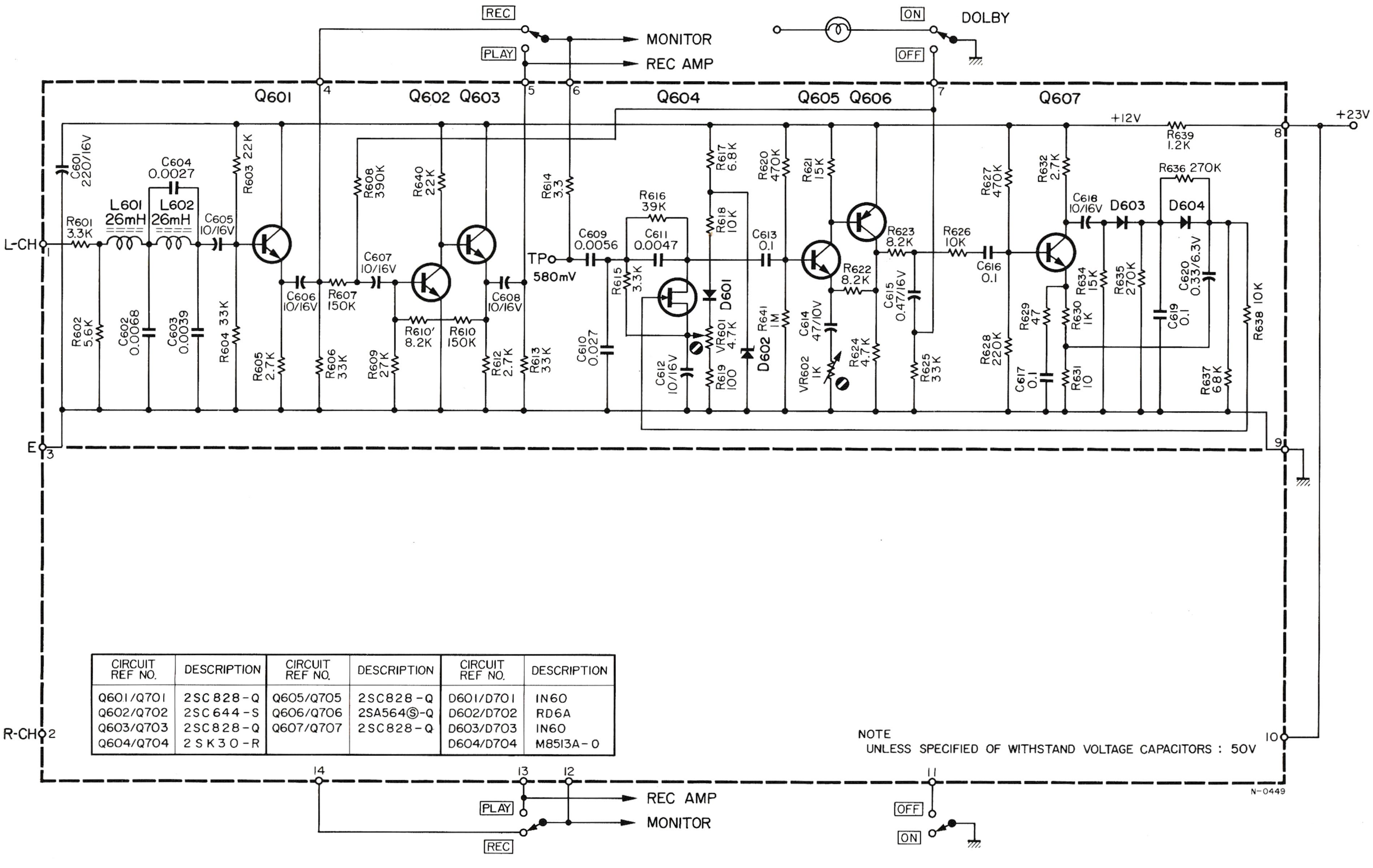

CIRCUIT REF NO.	DESCRIPTION	CIRCUIT REF NO.	DESCRIPTION	CIRCUIT REF NO.	DESCRIPTION
Q601/Q701	2SC828-Q	Q605/Q705	2SC828-Q	D601/D701	IN60
Q602/Q702	2SC644-S	Q606/Q706	2SA564Ⓢ-Q	D602/D702	RD6A
Q603/Q703	2SC828-Q	Q607/Q707	2SC828-Q	D603/D703	IN60
Q604/Q704	2SK30-R			D604/D704	M8513A-0

NOTE
UNLESS SPECIFIED OF WITHSTAND VOLTAGE CAPACITORS : 50V

N-0449