TEAC

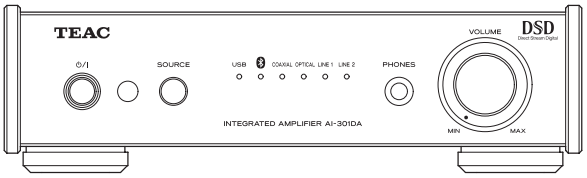

SERVICE MANUAL

AI-301DA

USB DAC STEREO INTEGRATED AMPLIFIER

Contents

1. Specifications 2
2. Dimensional drawings 3
3. Checking operation 4
4. Power Amp Assembly and change guide 8
5. Updating the USB Driver 8
6. Block Diagram 9
7. Wiring Diagram 10
8. Exploded Views and Parts List 11
9. PC Boards and Parts List 13
10. Safety parts 19
11. Included Accessories 20

目次

1. 仕様 2
2. 寸法図 3
3. 動作確認 4
4. POWER AMPユニットの交換 8
5. USB ドライバアップデート 8
6. ブロックダイアグラム 9
7. 結線図 10
8. 分解図とパーツリスト 11
9. 基板図とパーツリスト 13
10. 安全部品 19
11. 付属品 20

INSTRUCTIONS FOR SERVICE PERSONNEL

BEFORE RETURNING APPLIANCE TO THE CUSTOMER, MAKE LEAKAGE-CURRENT OR RESISTANCE MEASUREMENTS TO DETERMINE THAT EXPOSED PARTS ARE ACCEPTABLY INSULATED FROM THE SUPPLY CIRCUIT.

Effective: April 2014

D-0028

1. Specifications

仕様

Amplifier Section

Maximum power output	: 20 W + 20 W (JEITA 10%, 1 kHz, 8 Ω) 40 W + 40 W (JEITA 10%, 1 kHz, 4 Ω)
Rated power output	: 15 W + 15 W (JEITA 1%, 1 kHz, 8 Ω) 28 W + 28 W (JEITA 1%, 1 kHz, 4 Ω)
Total Harmonic Distortion	: 0.01% (1 kHz, 8 Ω, 1W)
Signal-to-noise ratio	
LINE IN	: 95 dB (IHF-A/LPF 20kHz 1kHz 2V input)
Frequency Response	: 2 Hz – 100 kHz (–5 dB)

Digital audio input

Coaxial digital jack (75Ω) × 1	: 0.5 Vp-p
Optical digital connector × 1	: – 24.0 to – 14.5 dBm peak
USB port (type B) connector	: USB 2.0
Supported sampling frequencies (PCM)	
	: 32/44.1/48/88.2/96/176.4/192 kHz (96kHz maximum when using optical digital input)
Supported bit lengths	: 16/24 bits
Supported sampling frequencies (DSD)	
	: 2.8/5.6 MHz (only when connected by USB)

Bluetooth

Bluetooth version	: V2.1+EDR
Output	: Class 2
Supported profiles	: A2DP, AVRCP

Headphones output

Rated output	: 100 mW+100 mW (32 Ω, 1 kHz)
Total harmonic distortion	: 0.005%

General

Power supply	
Model for Europe	: AC 230 V, 50 Hz
Model for USA/Canada	: AC 120 V, 60 Hz
Power consumption	: 38 W
Dimension (W × H × D)	: 215 × 61 × 254 mm (8 3/8" × 2 3/8" × 10") (including protrusions)
Weight	: 2.1 kg (4 5/8 lb)
Operating temperature	: +5°C to +35°C
Operating humidity	: 5% to 85% (no condensation)
Storage temperature	: –20°C to +55°C

アンプ部

最大出力	: 20 W＋20 W (JEITA 10% 1kHz 8Ω) 40 W＋40 W (JEITA 10% 1kHz 4Ω)
定格出力	: 15 W＋15 W (JEITA 1% 1kHz 8Ω) 28 W＋28 W (JEITA 1% 1kHz 4Ω)
全高調波歪率	: 0.01% (1KHz、8Ω、1W)
S/N比	
LINE IN	: 95dB (IHF-A/LPF20kHz1kHz 2V入力)
周波数特性	: 2Hz ～ 100kHz (－5dB)

デジタル音声入力

同軸デジタル端子 (75Ω)×1	: 0.5 Vp-p
光デジタル端子×1	: －24.0 ～－14.5dBm peak
USB-B端子	: USB2. 0準拠
対応サンプリング周波数 (PCM)	
	: 32/44.1/48/88.2/96/176.4/192kHz (光デジタル入力時は最大 96kHz)
対応ビット数	: 16/24ビット
対応サンプリング周波数 (DSD)	
	: 2.8/5.6MHz (USB接続時のみ対応)

Bluetooth

Bluetooth バージョン	: V2.1+EDR
出力	: Class 2
対応プロファイル	: A2DP、AVRCP

ヘッドホン出力

定格出力	: 100mW＋100mW (32Ω、1 kHz)
全高調波歪率	: 0.005 %

一般

電源	: AC 100V 50-60Hz
消費電力	: 38W
外形寸法	: 215mm x 61mm x 254mm (WxHxD、突起部を含む)
質量	: 2.1kg
許容動作温度	: ＋5℃～～＋35℃
許容動作湿度	: 5%～ 85% (結露のないこと)
許容保管温度	: －20℃～＋55℃

2. Dimensional drawings

寸法図

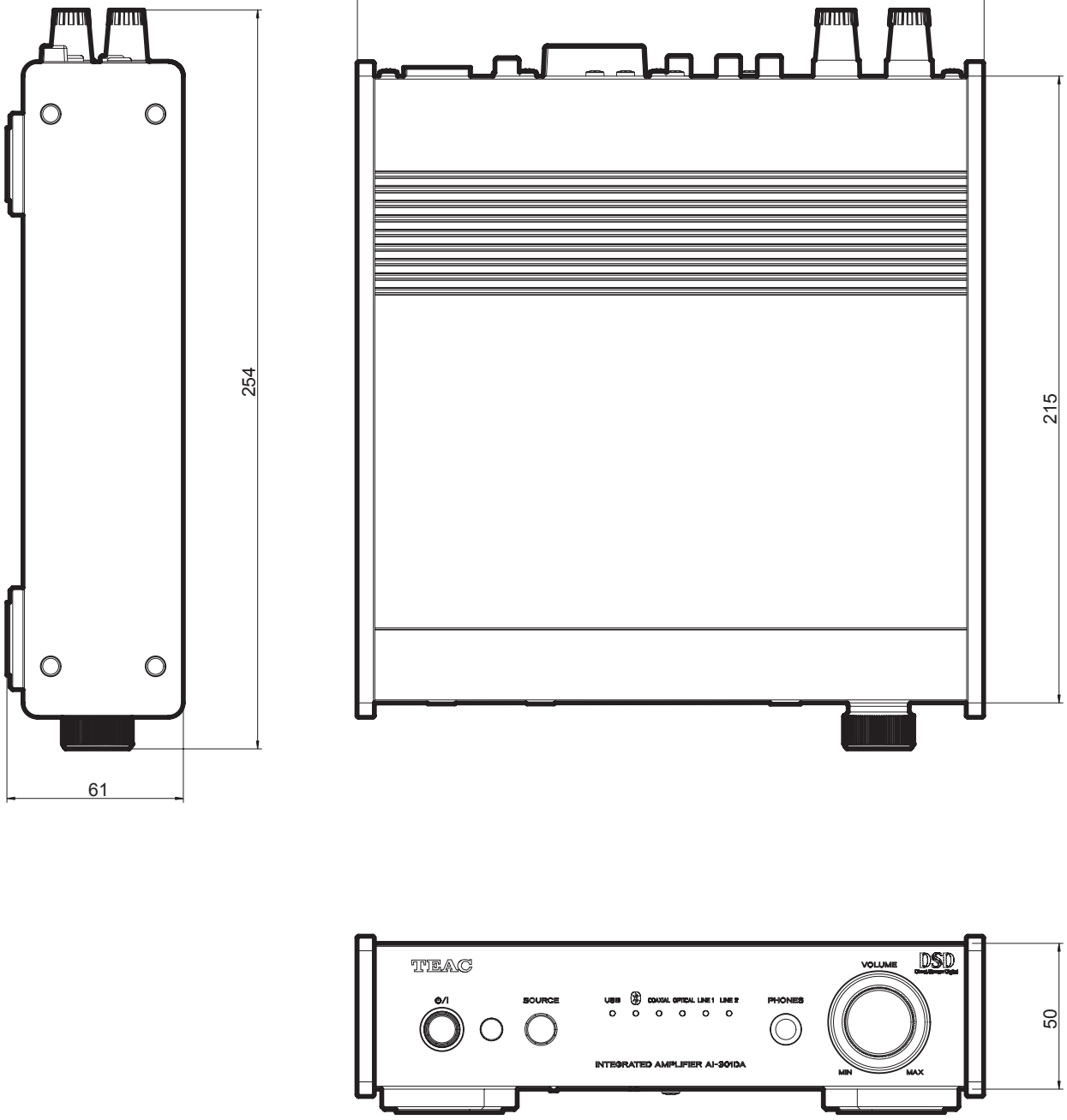

3. Checking operation

動作確認

1. Preparation

- Computer with Windows Vista, Windows 7 or Windows 8 installed
- **TEAC HR Audio Player** audio playback software
  This can be downloaded from the TEAC website (http://teac.jp/).
  (Install **TEAC HR Audio Player** on the above computer.)
- **DSD files**
  DSD files : 2.8/5.6 MHz
  These can be downloaded from the service website (https://service1.teac.co.jp/).
  (Prepare a dedicated folder on the above computer.)
- Dedicated USB driver
  This can be downloaded from the TEAC website (http://teac.jp/).
  (Install the USB driver on the above computer.)
- CD player
  (Use a CD player with digital output capability such as the CD-500, CD-6010 and CD-200 series.)
- Bluetooth device
- Prepare speakers (4Ω–8Ω impedance).
  Connect the [⊕/⊖] terminals on the speakers with the [⊕/⊖] speaker terminals on the back of this unit.
- Prepare a subwoofer speaker.
  Connect it to the subwoofer terminal on the back of this unit.
- Turn the **VOLUME** control on the front of the unit left until the **"•"** mark is at the **"MIN"** (minimum) position.
- Headphones with a 6.3mm stereo plug
- Turn this unit's **AUTO POWER SAVE** (**APS**) function off.
  [Turning the **APS** function off]
  When the unit is on, press and hold the standby/on (¤) button for about 5 seconds until all the input indicators become lit or unlit. This indicator state shows whether the **APS** function is on or off.
  All input indicators unlit: **APS** function on
  All input indicators lit: **APS** function off
  About 2 seconds after the unit is put into standby or turned on, the **APS** function setting will be shown for about 4 seconds by the indicators.

CAUTION

- If the unit is turned on when the volume **"•"** mark is at any position other than **"MIN"** (minimum), a sudden loud noise might occur. This could damage the speakers, harm your hearing or cause other trouble.
- If the **APS** function is kept on when the unit is switched to testing mode, the unit will turn off during the operations.

1. 準備

- Windows XP、Windows Vista、Windows 7、Windows 8のいずれかのOSを搭載したPC
- 音楽再生ソフトウェア [**TEAC HR Audio Player**]
  TEACのウェブサイト(http://teac.jp/)から入手可能。
  (上記のPCに、**TEAC HR Audio Player**をインストールして用意しておく)
- **DSD**ファイル
  DSD ファイル : 2.8/5.6 MHz
  サービス用ウェブサイト(https://service1.teac.co.jp/)から入手可能。
  (上記のPCに、専用フォルダを用意して準備しておく)
- 専用USBドライバー
  TEACのウェブサイト(http://teac.jp/)から入手可能。
  (上記のPCに、専用USBドライバーをインストールして用意しておく)
- CDプレーヤー
  (CD-500、CD-6010、CD-200シリーズなどのデジタル出力を可能なCDプレーヤー)
- Bluetooth機器
- スピーカー (インピーダンス : 4Ω～8Ω)を用意する。
  スピーカーの[⊕/⊖]を本機背面のスピーカー [⊕/⊖]端子に接続する。
- サブウーハースピーカーを用意する。
  本機背面のサブウーハー端子に接続する。
- 本機前面のボリューム**[VOLUME]**を左に回し、**"•"**のマークを**"MIN"**の位置(最小)にセットする。
- Φ6.3mmステレオプラグ付きヘッドホン
- 本機の**AUTO POWER SAVE** 機能 (以下、**APS**)をオフにする。
  [**APS**機能をオフにする場合]
  電源がオンの状態でスタンバイ/オンボタン(⏻/I)を約5秒間長押しすると、全ての入力インジケーターが点灯又は消灯する。そのインジケーターの状態で**APS**機能のオン/オフを選択する。
  入力インジケーター全消灯：**APS**機能 [オン]
  入力インジケーター全点灯：**APS**機能 [オフ]
  上記の**APS**機能は、本機のスタンバイ/オン時の2秒後に**APS**状態を約4秒間、インジケーターで表示する。

注 意

- ボリュームの**"•"**マークが**"MIN"**の位置(最小)以外で、本機の電源をオンにすると突然大きな音が出て、スピーカーを破損したり、聴力障害などの原因となることがあります。
- **APS**機能をオンにしたまま、テストモードに移行すると操作途中で電源がオフします。

2. Checking USB input

1) Use a USB cable to connect the USB port on the back of this unit to the computer.

2) First, start the computer, and launch **TEAC HR Audio Player**.

3) Press the unit's standby/on (⏻/I) button to turn it on. Press the **SOURCE** button on the front of the unit repeatedly until the **USB** input indicator LED lights.

4) Use **TEAC HR Audio Player** to open (Fig-1-①) the DSD (Fig-1-②) file saved on the computer.

2. [USB]入力の確認

1)本機背面のUSB端子とPCをUSBケーブルで接続する。

2)最初にPCを起動して、**TEAC HR Audio Player**を立ち上げておく。

3)本機のスタンバイ/オンボタン(⏻/I)をオンにする。
正面の**SOURCE**ボタンを繰り返し押して、入力インジケーター **[USB]**のLEDを点灯させる。

4)**TEAC HR Audio Player**から、PCに保存(Fig-1-①)してある**DSD**(Fig-1-②)ファイルを開く。

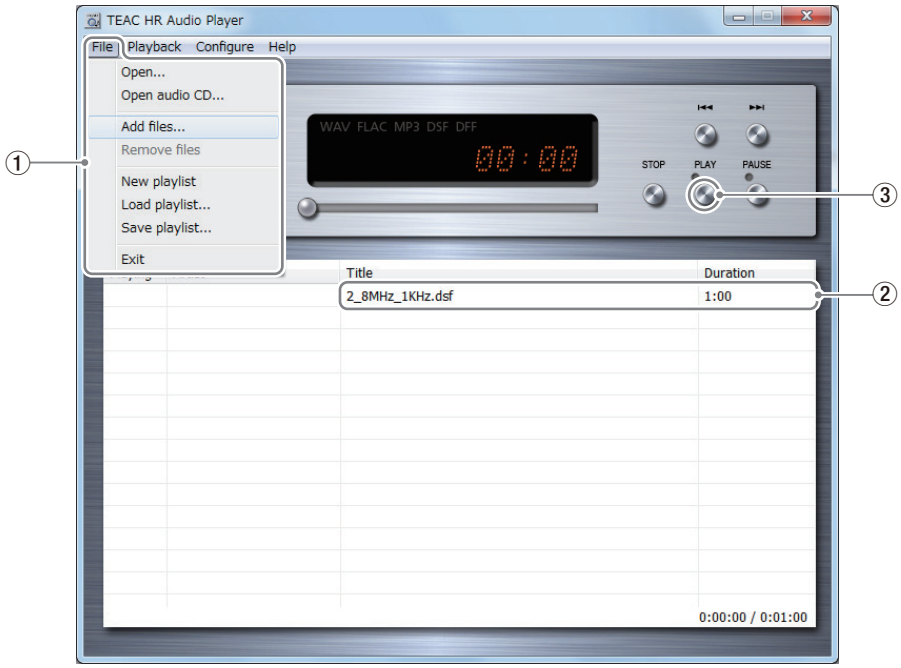

Fig-1

5) Select the file shown in **TEAC HR Audio Player** and press the PLAY button (Fig-1-③).

6) Gradually turn the **VOLUME** knob on the front of the unit clockwise and confirm that sound is coming from the speakers, including the subwoofer.
After confirming this, return the **VOLUME** to its **"MIN"** (minimum) position.

7) Quit **TEAC HR Audio Player** on the computer and end the **USB** connection between this unit and the computer. Confirm that the USB input indicator blinks when you do this.

5)**TEAC HR Audio Player**に表示しているファイルを選択し、[PLAY(再生)]ボタン(Fig-1-③)を押す。

6)前面のボリューム**[VOLUME]**を徐々に右側に回して、スピーカーとサブウーハースピーカーから音がでることを確認する。
確認後、ボリューム**[VOLUME]**位置を**"MIN"**の位置(最小)に戻す。

7)PCの**TEAC HR Audio Player**を閉じて、本機とPCのUSB接続を解除し、入力インジケーター **[USB]**が点滅することを確認する。

3. Checking Bluetooth input

1) Press the **SOURCE** button on the front of the unit repeatedly until the **Bluetooth** input indicator LED lights.

2) Use the other Bluetooth device to pair or connect with this unit.
To ready this unit for pairing, after putting it into Bluetooth mode, press and hold the **SOURCE** button for at least 3 seconds. When the unit is ready for pairing, its **Bluetooth** input indicator will begin flashing rapidly. If the other Bluetooth device requires the input of a passcode on its setting screen, input "0000" (four zeros).

3) When the unit confirms connection with the other Bluetooth device, its **Bluetooth** input indicator will stop flashing, but stay lit.
Start playback of an audio file on the other Bluetooth device, gradually turn the **VOLUME** knob on the front of the unit clockwise and confirm that sound is coming from the speakers, including the subwoofer. After confirming this, return the **VOLUME** to its **"MIN"** (minimum) position.

4) End the connection with the other Bluetooth device, and confirm that the **Bluetooth** input indicator starts blinking.

3. [Bluetooth]入力の確認

1)正面の**SOURCE**ボタンを繰り返し押して、入力インジケーター **[Bluetooth]**のLEDを点灯させる。

2)Bluetooth機器で本機とペアリングまたは接続を行う。
本機をペアリング待機状態にするには、本機をBluetoothモードにしてから**SOURCE**ボタンを3秒以上長押しをする。ペアリング待機状態になると、入力インジケーター**[Bluetooth]**が速い点滅に切り替わる。
また、Bluetooth機器の設定画面でパスコードの入力を要求された場合は、[0000](ゼロ4つ)を入力する。

3)Bluetooth機器と接続が確認できたら、入力インジケーター **[Bluetooth]**が点灯に切り替わる。
Bluetooth機器で音楽ファイルを再生し、前面のボリューム**[VOLUME]**を徐々に右側に回して、スピーカーとサブウーハースピーカーから音がでることを確認する。
確認後、ボリューム**[VOLUME]**位置を**"MIN"**の位置(最小)に戻す。

4)Bluetooth機器と接続を解除し、入力インジケーター **[Bluetooth]**が点滅することを確認する。

4. Checking the COAXIAL input

1) Connect the coaxial digital output from the CD player to the **COAXIAL** input connector on the back of this unit.

2) Press the **SOURCE** button on the front of the unit repeatedly until the **COAXIAL** input indicator LED lights.

3) Start CD player playback, gradually turn the **VOLUME** knob on the front of the unit clockwise and confirm that sound is coming from the speakers, including the subwoofer.
After confirming this, return the **VOLUME** to its **"MIN"** (minimum) position.

4) Confirm that the **COAXIAL** input indicator blinks when the CD player is turned off.

5. Checking the OPTICAL input

1) Connect the optical digital output from the CD player to the **OPTICAL** input connector on the back of this unit.

2) Press the **SOURCE** button on the front of the unit repeatedly until the **OPTICAL** input indicator LED lights.

3) Start CD player playback, gradually turn the **VOLUME** knob on the front of the unit clockwise and confirm that sound is coming from the speakers, including the subwoofer.
After confirming this, return the **VOLUME** to its **"MIN"** (minimum) position.

4) Confirm that the **OPTICAL** input indicator blinks when the CD player is turned off.

6. Checking the LINE 1 input

1) Connect the L/R analog audio outputs of the CD player to the L/R **LINE 1** input jacks on the back of this unit.

2) Press the **SOURCE** button on the front of the unit repeatedly until the **LINE 1** input indicator LED lights.

3) Start CD player playback, gradually turn the **VOLUME** knob on the front of the unit clockwise and confirm that sound is coming from the speakers, including the subwoofer.
After confirming this, return the **VOLUME** to its **"MIN"** (minimum) position.

7. Checking the headphones output

1) Connect the L/R analog audio outputs of the CD player to the L/R **LINE 1** input jacks on the back of this unit.
Connect the prepared headphones with a 6.3mm stereo plug to the headphones jack on the front of the unit.

2) Press the **SOURCE** button on the front of the unit repeatedly until the **LINE 1** input indicator LED lights.

3) Start CD player playback, gradually turn the **VOLUME** knob on the front of the unit clockwise and confirm that sound is coming from the headphones.
After confirming this, return the **VOLUME** to its **"MIN"** (minimum) position.

8. Checking the LINE 2 input

1) Connect the L/R audio outputs of the CD player to the L/R **LINE 2** input jacks on the back of this unit.

2) Press the **SOURCE** button on the front of the unit repeatedly until the **LINE 2** input indicator LED lights.

3) Start CD player playback, gradually turn the **VOLUME** knob on the front of the unit clockwise and confirm that sound is coming from the speakers, including the subwoofer.
After confirming this, return the **VOLUME** to its **"MIN"** (minimum) position

.

4. [COAXIAL]入力の確認

1) CDプレーヤーのデジタル出力[COAXIAL]を本機背面の**[COAXIAL]**入力端子に接続する。

2) 正面の**SOURCE**ボタンを繰り返し押して、入力インジケーター **[COAXIAL]**のLEDを点灯させる。

3) CDプレーヤーを再生して、前面のボリューム**[VOLUME]**を徐々に右側に回して、スピーカーとサブウーハースピーカーから音がでることを確認する。
確認後、ボリューム**[VOLUME]**位置を**"MIN"**の位置(最小)に戻す。

4) CDプレーヤーの電源をオフした際、入力インジケーター**[COAXIAL]**が点滅することを確認する。

5. [OPTICAL]入力の確認

1) CDプレーヤーのデジタル出力[OPTICAL]を本機背面の**[OPTICAL]**入力端子に接続する。

2) 正面の**SOURCE**ボタンを繰り返し押して、入力インジケーター **[OPTICAL]**のLEDを点灯させる。

3) CDプレーヤーを再生して、前面のボリューム**[VOLUME]**を徐々に右側に回して、スピーカーとサブウーハースピーカーから音がでることを確認する。
確認後、ボリューム**[VOLUME]**位置を**"MIN"**の位置(最小)に戻す。

4) CDプレーヤーの電源をオフした際、入力インジケーター**[OPTICAL]**が点滅することを確認する。

6. [LINE 1]入力の確認

1) CDプレーヤーのアナログ音声出力[L/R]を本機背面の**[LINE 1]**入力のL/R端子に接続する。

2) 正面の**SOURCE**ボタンを繰り返し押して、入力インジケーター **[LINE 1]**のLEDを点灯させる。

3) CDプレーヤーを再生して、前面のボリューム**[VOLUME]**を徐々に右側に回して、スピーカーとサブウーハースピーカーから音がでることを確認する。
確認後、ボリューム**[VOLUME]**位置を**"MIN"**の位置(最小)に戻す。

7. ヘッドホン出力の確認

1) CDプレーヤーのアナログ音声出力[L/R]を本機背面の**[LINE 1]**入力のL/R端子に接続する。
用意したΦ6.3mmステレオプラグ付きヘッドホンを前面のヘッドホン端子に接続する。

2) 正面の**SOURCE**ボタンを繰り返し押して、入力インジケーター **[LINE 1]**のLEDを点灯させる。

3) CDプレーヤーを再生して、前面のボリューム**[VOLUME]**を徐々に右側に回して、ヘッドホンから音がでることを確認する。
確認後、ボリューム**[VOLUME]**位置を**"MIN"**の位置(最小)に戻す。

8. [LINE 2]入力の確認

1) CDプレーヤーの音声出力[L/R]を本機背面の**[LINE 2]**入力のL/R端子に接続する。

2) 正面の**SOURCE**ボタンを繰り返し押して、入力インジケーター **[LINE 2]**のLEDを点灯させる。

3) CDプレーヤーを再生して、前面のボリューム**[VOLUME]**を徐々に右側に回して、スピーカーとサブウーハースピーカーから音がでることを確認する。
確認後、ボリューム**[VOLUME]**位置を**"MIN"**の位置(最小)に戻す。

9. Checking the firmware versions (main unit and USB)

1) Confirm the latest firmware version on the service manual homepage (https://service1.teac.co.jp/).

2) If the unit is in standby/on, press the standby/on (⏻/I) button to turn it off.
After turning the unit off, wait at least 3 seconds before operating the unit again.

3) Press and hold both the **SOURCE** and standby/on (¤) buttons on the front of the unit for 5 seconds.

4) After 5 seconds, when you release both buttons, the input indicators will show the main unit firmware version being used. You can temporarily switch to showing the USB firmware version by pressing and holding the **SOURCE** button.

- Switching the firmware display

SOURCE button	
Not pressed	Main unit firmware version
Pressed	USB firmware version

- Firmware version indication
IInput indicator

LINE 2 lit	:	Version 1
LINE 1 lit	:	Version 2
LINE 1+**LINE 2** lit	:	Version 3
OPTICAL lit	:	Version 4
OPTICAL+**LINE 2** lit	:	Version 5

5) After using the above table to confirm that the latest firmware versions are being used, press the standby/on (⏻/I) button to turn the unit off.

9. Firmware Version (本体・USB) 確認

1) 最新の各ファームウェアバージョンをサービスマニュアルのホームページ(https://service1.teac.co.jp/)で確認する。

2) 本機がスタンバイ/オンの状態の場合、スタンバイ/オンボタン(⏻/I)を押して、オフにする。
スタンバイ/オフが確認できたら、3秒経過するまで本機の操作を行わないようにする。

3) 本機正面の**SOURCE**ボタンとスタンバイ/オンボタン(⏻/I)を5秒間、押したままにする。

4) 5秒間経過後、各ボタンから手を離した状態で入力インジケーターに[本体]ファームウェアバージョンを表示する。
また、**SOURCE**ボタンを押している間は、[USB]ファームウェアバージョンの表示に切り替わる。

- ファームウェアの切替え

SOURCE ボタン	
オフ	本体ファームウェアバージョン
オン	USBファームウェアバージョン

- ファームウェアの表示
入力インジケーター

LINE2 点灯	:	Version 1
LINE1 点灯	:	Version 2
LINE1+**LINE2** 点灯	:	Version 3
OPTICAL 点灯	:	Version 4
OPTICAL+**LINE2** 点灯	:	Version 5

5) 上記の表から各ファームウェアバージョンが最新になっているか確認後、スタンバイ/オンボタン(⏻/I)を押して、本機をオフにする。

4. Power Amp Assembly and change guide

POWER AMP ユニットの交換

Checking the destination voltage of the POWER AMP unit

When changing the POWER AMP unit, pay attention to the jumper pin insertion position of the included part, which is set according to the destination voltage.

Part number [P200]

- AC115V [JPN], [T/C]: short between pins 1 and 2
- AC230V [EUR], [UK]: short between pins 2 and 3

POWER AMPユニットの仕向け電圧の確認

POWER AMPユニットを交換した際は、仕向け電圧によって、付属品のジャンパーピンの挿入位置に注意する。

部品番号[P200]

- AC115V［JPN]、[T/C]: 1ピン-2ピン間ショート
- AC230V［EUR]、[UK]: 2ピン-3ピン間ショート

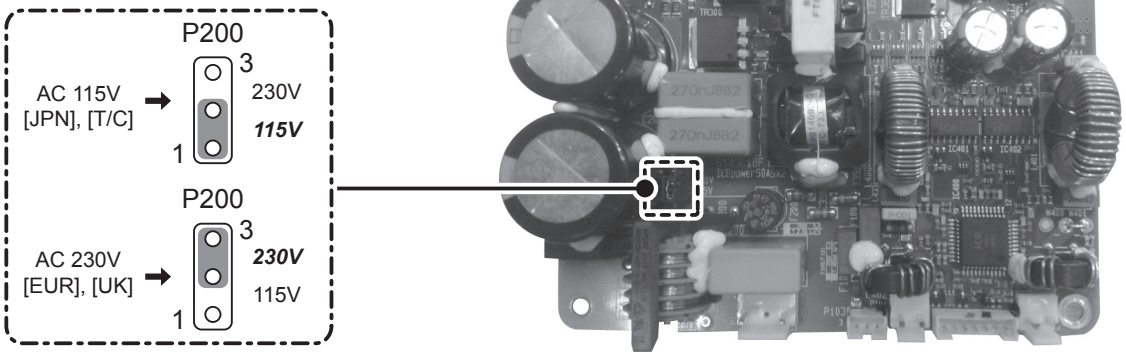

Confirming the DC offset voltage of the speaker terminals

Connect a tester between the ⊕/⊖ speaker terminals of the L (or R) channel, and confirm that when there is no signal the DC voltage is within the range below for that channel.

DC voltage = 0 V within ±30 mV

スピーカー端子 DC オフセット電圧 確認

スピーカー端子の"L"(または"R")chの⊕/⊖間にテスターを接続して、無信号時のDC電圧が"L"(または"R")chで、下記の範囲にあることを確認する。

DC電圧＝ 0V±30mV以内

5. Updating the USB Driver

USB ドライバアップデート

1. Preparation

- Computer with Windows XP, Windows Vista, Windows 7 or Windows 8 installed
- Download the latest USB firmware from the service manual homepage (https://service1.teac.co.jp/) and save the "updata.bin" updater file to a USB flash drive.
- Press the unit's standby/on (⏻/I) button to turn it on.
  Press the **SOURCE** button on the front of the unit repeatedly until the **USB** input indicator LED lights.
  After a while, confirm that the **USB** input indicator LED is blinking, and press the unit's standby/on (⏻/I) button to turn it off.

2. Update procedures

1) While the unit is off, insert the USB flash drive that contains the updater file into the **UPDATE** port on the back of the unit.
2) In order to provide USB power, use a USB cable to connect the USB port on the back of this unit to a computer.
3) Press and hold the **SOURCE** button on the front of the unit for about 5 seconds until the unit turns on, then release the button.
4) The **USB** and **Bluetooth** input indicator LEDs will blink, and the USB update will start.
   During the update, the input indicators will light in the following order.

   USB (blinking) ➝ **Bluetooth** (blinking) ➝ (lit) ➝ **COAXIAL** (blinking) ➝ (lit) ➝ **OPTICAL** (blinking) ➝ (lit) ➝ **LINE 1** (blinking) ➝ (lit) ➝ **LINE 2** (blinking) ➝ (lit)

   When the **LINE 2** input indicator lights, the USB update is complete. (The **USB** input indicator will continue blinking through the entire process.)
5) Press the standby/on (⏻/I) button to turn the unit off.

1. 準備

- Windows XP、Windows Vista、Windows 7、Windows 8のいずれかのOSを搭載したPC
- 最新の[USB]ファームウェアをサービスマニュアルのホームページ(https://service1.teac.co.jp/)から入手し、USBメモリーにアップデートファイル"updata.bin"を保存する。
- 本機のスタンバイ/オンボタン(⏻/I)をオンにする。
  正面の**SOURCE**ボタンを繰り返し押して、入力インジケーター **[USB]**のLEDを点灯させる。しばらくして、入力インジケーター **[USB]**のLEDが点滅を確認したら、スタンバイ/オンボタン(⏻/I)を押して本機をオフにする。

2. アップデート手順

1)本機の電源をオフのまま、アップデートファイルを保存したUSBメモリーを背面の**[UPDATE]**端子に挿入する。
2)USB電源供給用として背面のUSB端子とPCをUSBケーブルで接続する。
3)本機正面の**SOURCE**ボタンを押したまま、約5秒間経過すると本機の電源がオンになるので、**SOURCE**ボタンから指を離す。
4)入力インジケーター **[USB]**と**[Bluetooth]**のLEDが点滅し、[USB]アップデートを開始する。アップデート中は、入力インジケーターが下記の順で移行する。

   [USB] (点滅) ➝ **[Bluetooth]** (点滅) ➝ (点灯) ➝ **[COAXIAL]** (点滅) ➝ (点灯) ➝ **[OPTICAL]** (点滅) ➝ (点灯) ➝ **[LINE 1]** (点滅) ➝ (点灯) ➝ **[LINE 2]** (点滅) ➝ (点灯)

   入力インジケーター **[LINE 2]**が"点灯"で[USB]アップデートは完了となる。(入力インジケーター **[USB]**は、終始"点滅"状態になる)
5)スタンバイ/オンボタン(⏻/I)を押して本機をオフにする。

6. Block Diagram

ブロックダイアグラム

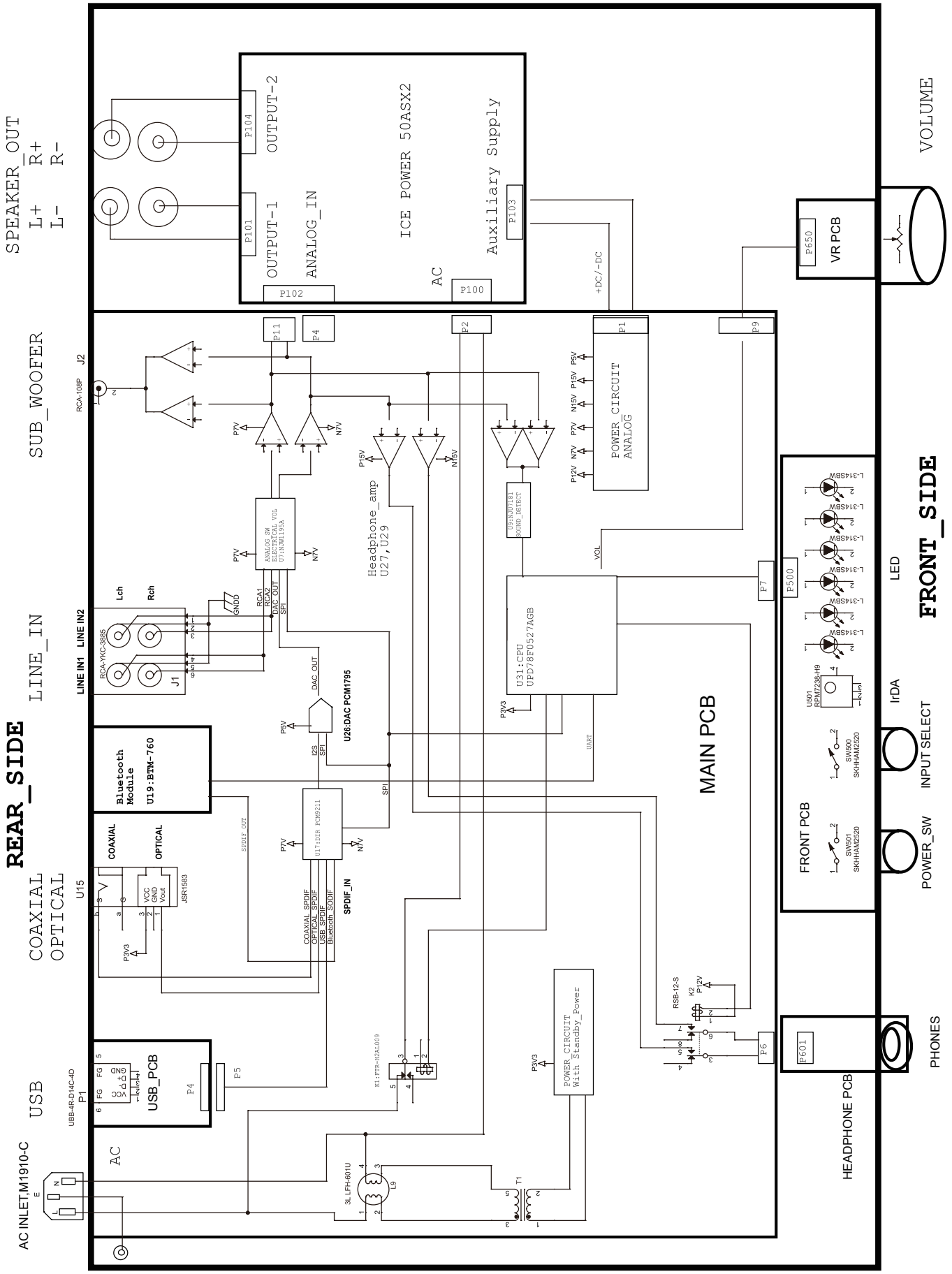

7. Wiring Diagram

結線図

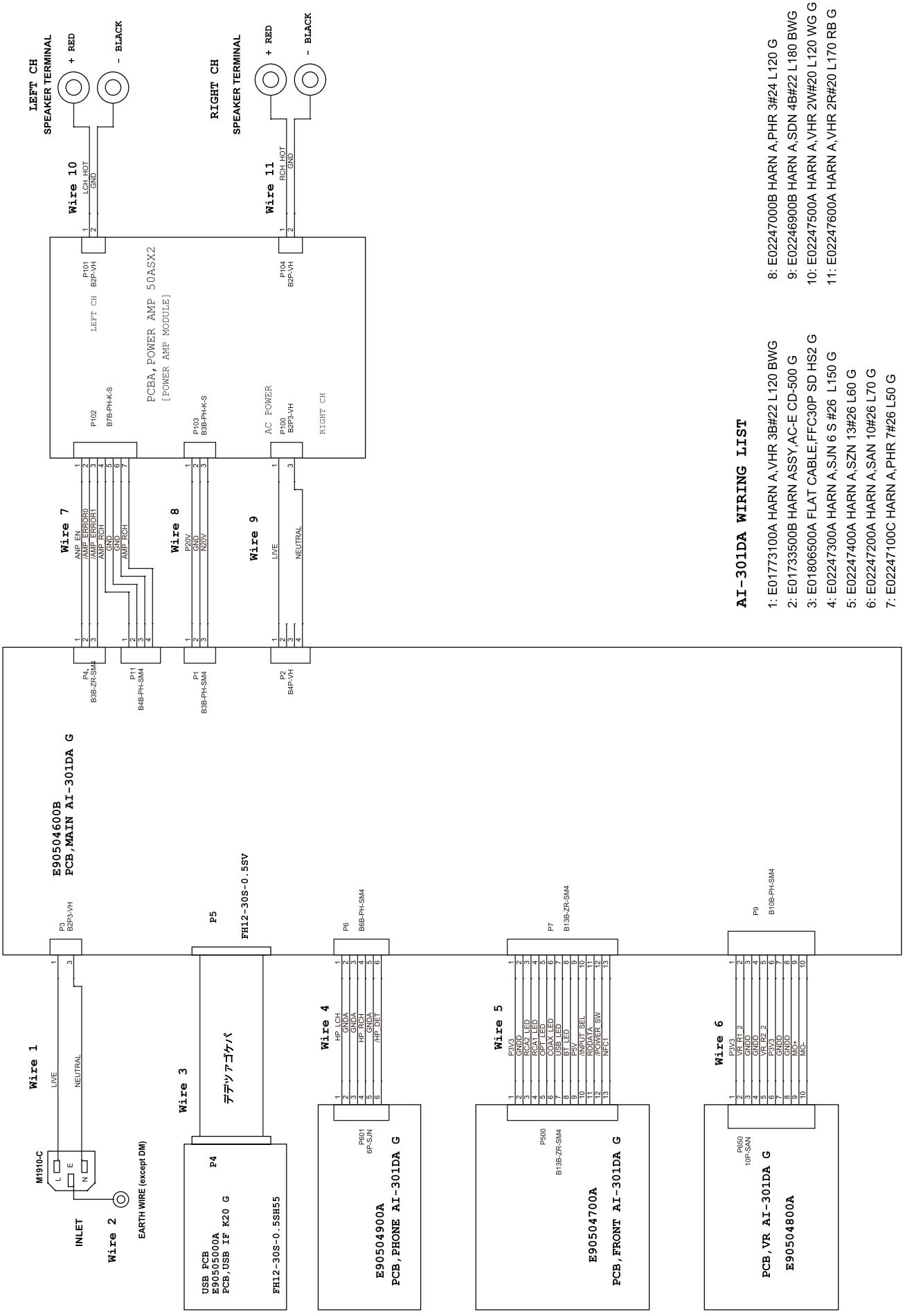

AI-301DA WIRING LIST

1: E01773100A HARN A,VHR 3B#22 L120 BWG
2: E01733500B HARN ASSY,AC-E CD-500 G
3: E01806500A FLAT CABLE,FFC30P SD HS2 G
4: E02247300A HARN A,SJN 6 S #26 L150 G
5: E02247400A HARN A,SZN 13#26 L60 G
6: E02247200A HARN A,SAN 10#26 L70 G
7: E02247100C HARN A,PHR 7#26 L50 G
8: E02247000B HARN A,PHR 3#24 L120 G
9: E02246900B HARN A,SDN 4B#22 L180 BWG
10: E02247500A HARN A,VHR 2W#20 L120 WG G
11: E02247600A HARN A,VHR 2R#20 L170 RB G

8. Exploded Views and Parts List

分解図とパーツリスト

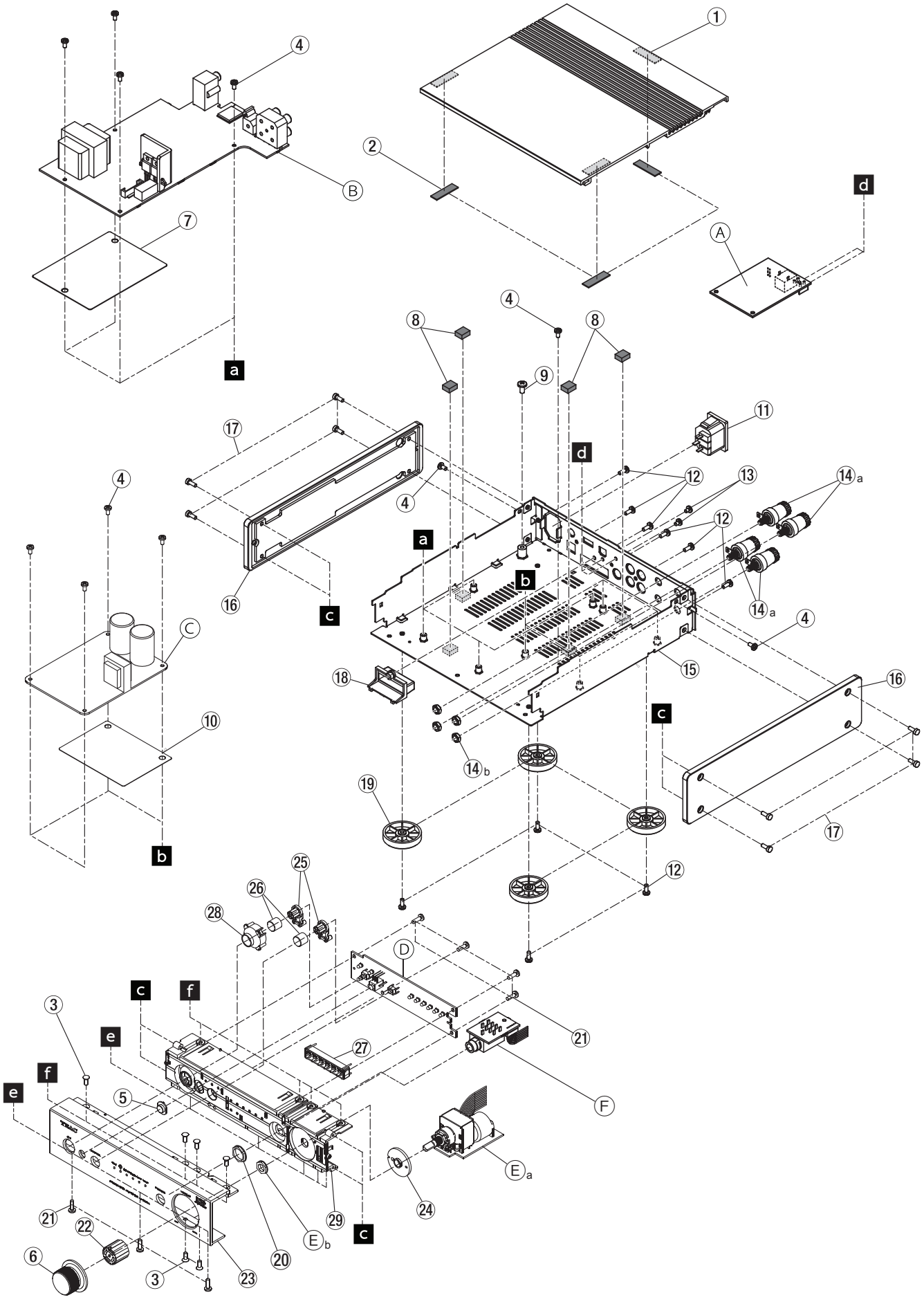

CAUTION **Part with numbers in parentheses ( ) cannot be ordered.**

注 意 "( )"付き品番は、発注できません。

Exploded View Parts List

REF.NO	PARTS NO.	DESCRIPTION .	QTY	REMARKS
1	M03652410B	PANEL,TOP 301 B G	1	Silver
	M03652400B	PANEL,TOP 301 B G	1	Black
2	M01643200A	SHEET,PANEL FRONT G	3	
3	B00208508A	SCREW,FPP 3*8 FZC G	6	
4	B00174006A	SCREW,BPA 3*6 FZC G	11	
5	3M0859020A	LENS SENSOR AI301-S	1	Silver
	3M0859010A	LENS SENSOR A/DSH01-B	1	Black
6	M03651700A	KNOB,VR 301 G	1	
7	M03652000A	INSUL SH,PCB MAIN AI301 G	1	
8	3M0840000A	SENSOR EVA CUSHION	4	
9	B00174108A	SCREW,BPA 4*8FZC G	1	
10	M03652200A	INSUL SH,PCB AMP AI301 G	1	
11	E0222290	CONN,AC INLET M1910-C G	1	⚠
12	B00199708A	SCREW,BPB 3*8 FZB G	10	
13	B00171404A	SCREW,BPA 3*4 FZB G	2	
14	3E0837000A	TERMINAL,SPEAKER AH1(G)	4	*Nuts is also included.
15	M03651800C	CHASSIS,BTM AI301 G	1	
16	M03652500C	PANEL,SIDE 301 G	2	
17	B00318908A	SCREW,YHB 3*8 FNI G	8	
18	M03652600A	COVER,BT AI301 G	1	
19	M03669200A	FOOT,D35-H8(S) RUB G	4	
20	M0358050	NUT,M12*2.3 G	1	
21	B00192710A	SCREW,BPP 3*10 FZB G	7	
22	M03651600D	HOLDER,KNOB VR 301 G	1	
23	M03650410C	PANEL,FRONT AI301B G	1	Silver
	M03650400C	PANEL,FRONT AI301 B G	1	Black
24	M03651400B	BRACKET,VR AI301 G	1	
25	M03650700D	BUTTON,TACT 301 G	2	
26	M03650800A	CAP,BUTTON 301 G	2	
27	M03651100A	LENS,UI 6 301 G	1	
28	M03651000B	LENS,POWER 301 G	1	
29	M03650600C	ESCUTCHEON,PNL FR 301 G	1	
A	E95505000A	PCB ASSY,USB IF K20 G	1	“GA PCBA,USB IF K20 G” on page 19
B	(E95504600A)	PCBA,MAIN AI-301DA DM G	1	“GATHER PCB, AI-301DA” on page 19
C	3E9023900A	PCB ASSY,ICE POWER AMP AH1 (G)	1	
D	(E95504700A)	PCBA,FRONT AI-301DA G	1	“GATHER PCB, I/O FRONT” on page 19
E	(E95504800A)	PCBA,VR AI-301DA G	1	“GATHER PCB, I/O FRONT” on page 19 * Nut is also included.
F	(E95504900A)	PCBA,PHONE AI-301DA G	1	“GATHER PCB, AI-301DA” on page 19

9. PC Boards and Parts List

基板図とパーツリスト

GATHER PCB, AI-301DA (Side A)

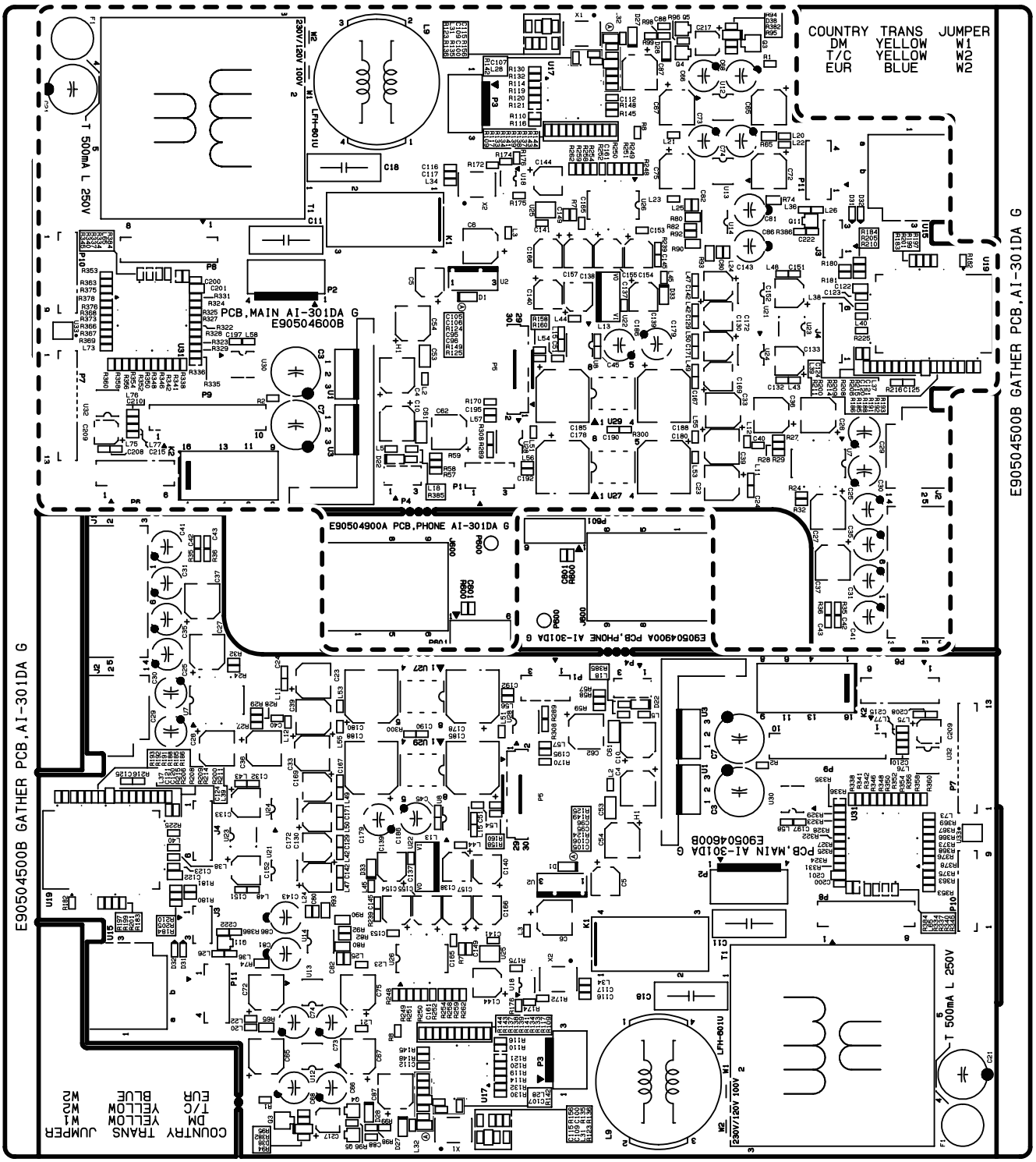

GATHER PCB, AI-301DA (Side B)

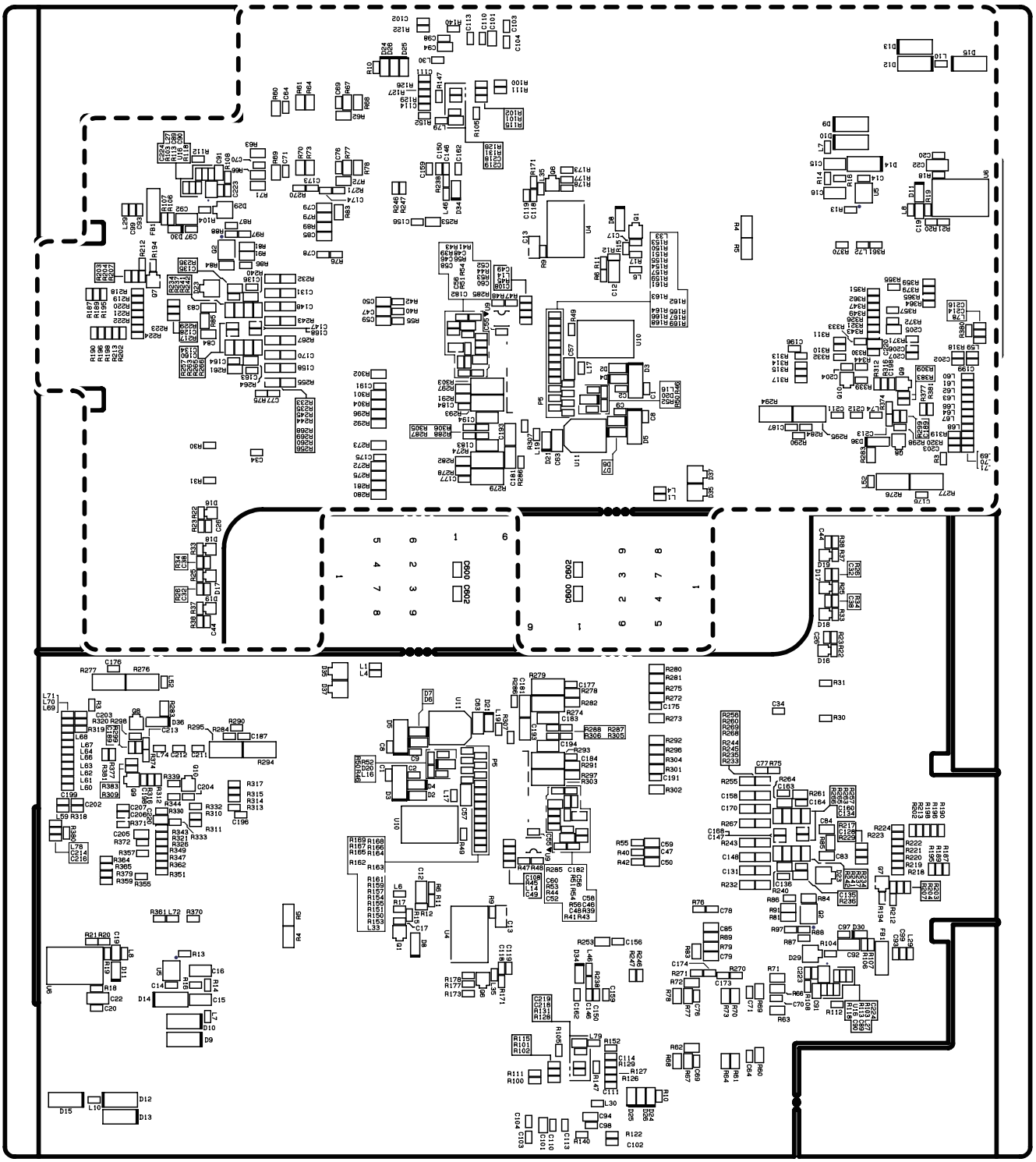

GATHER PCB, I/O FRONT (Side A)

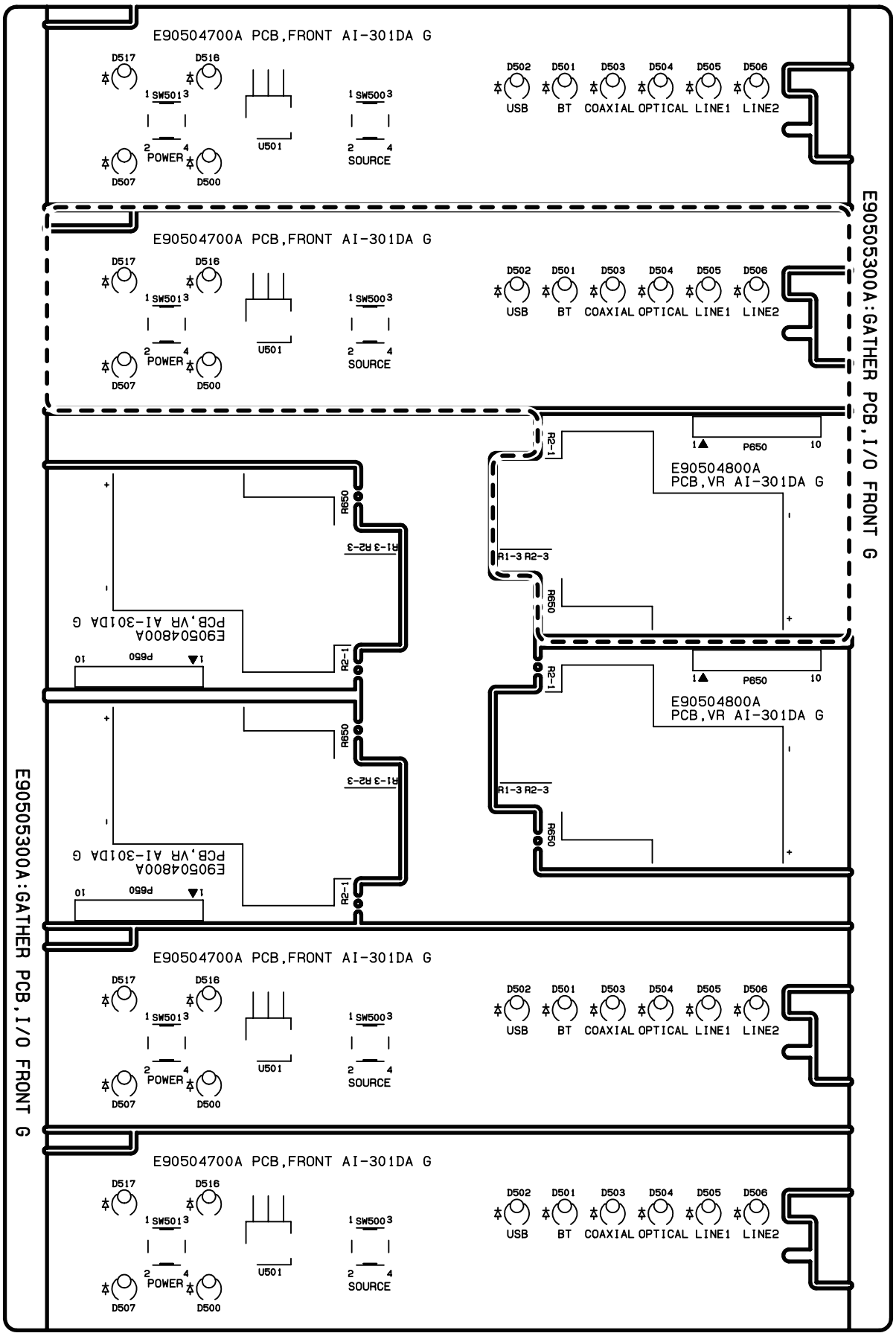

GATHER PCB, MAIN AI-501DA (Side B)

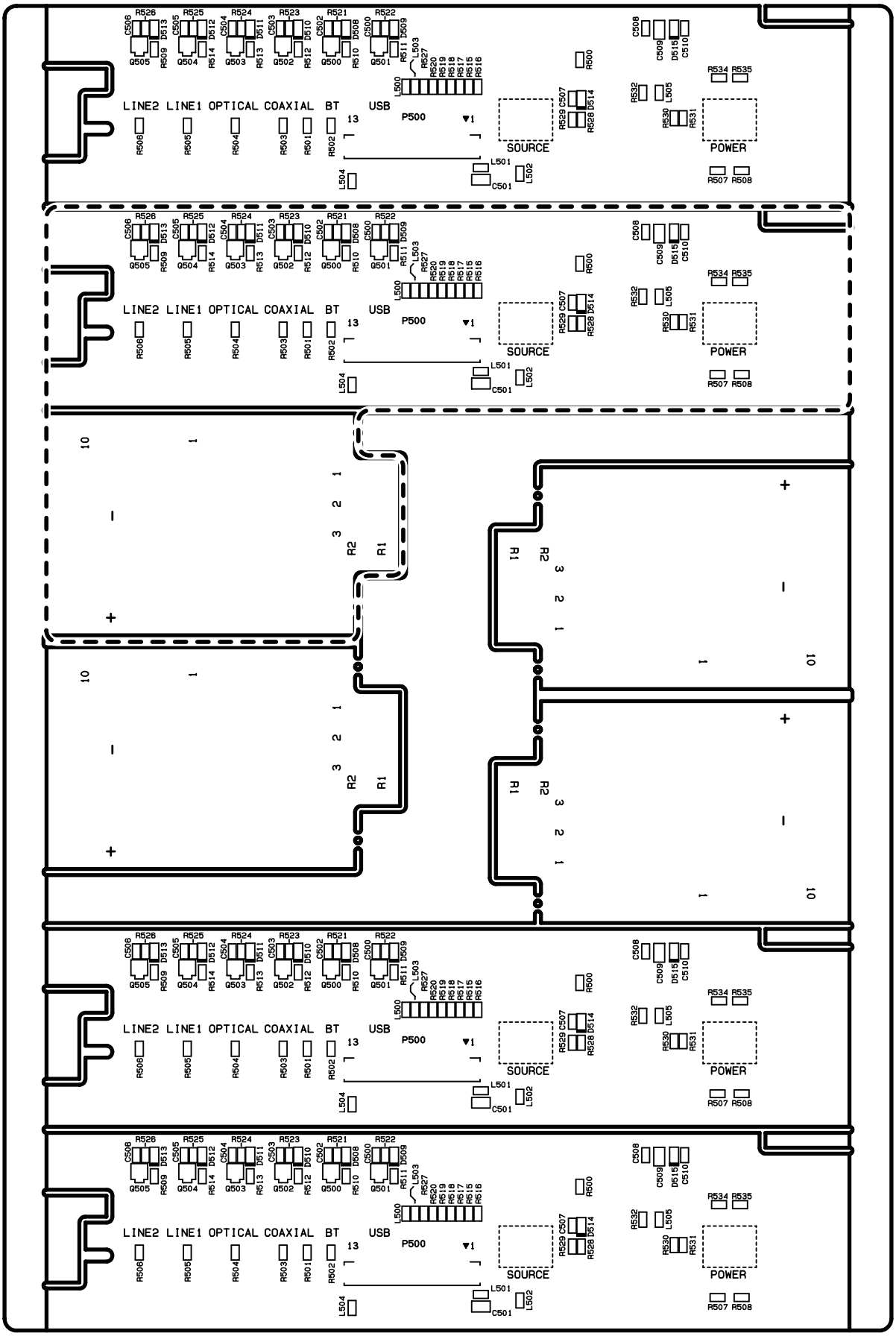

CAUTION **The portion in the dashed box consists of service parts that need to be ordered using part numbers in Bold.**

注意 破線部分は、太字品番で発注する補修部品になります。

GA PCB USB IF K20 G (Side A)

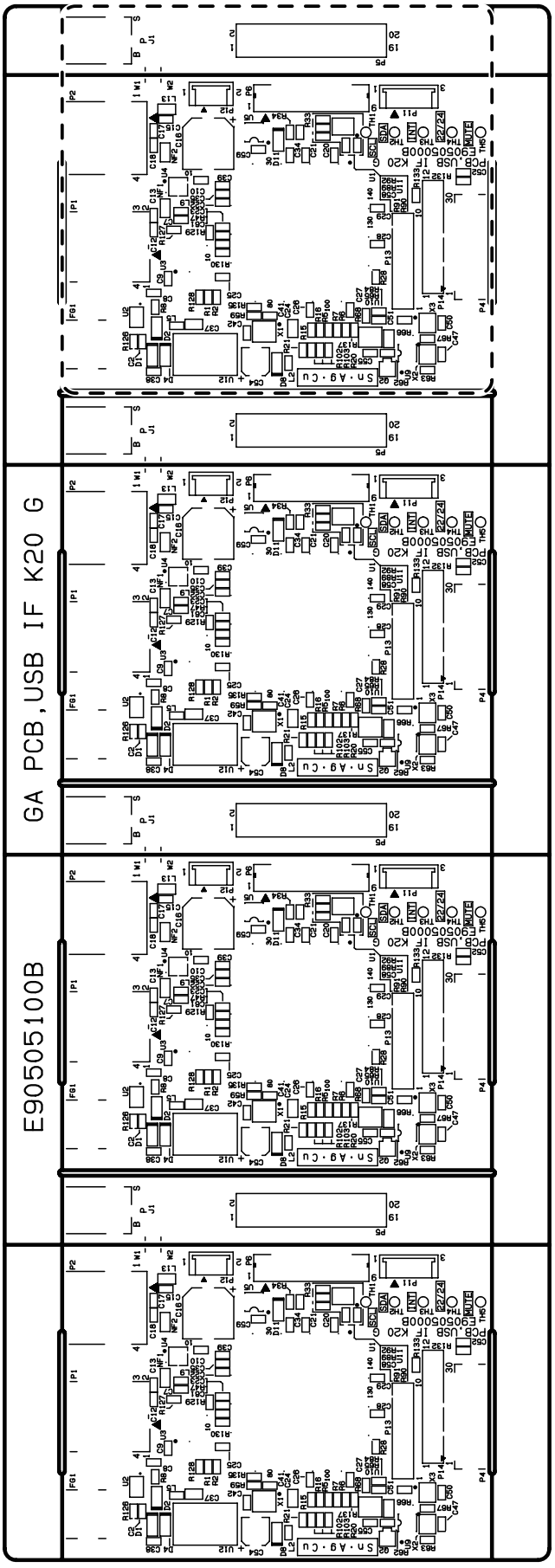

CAUTION **The portion in the dashed box consists of service parts that need to be ordered using part numbers in Bold.**

注意 破線部分は、太字品番で発注する補修部品になります。

GA PCB USB IF K20 G (Side A)

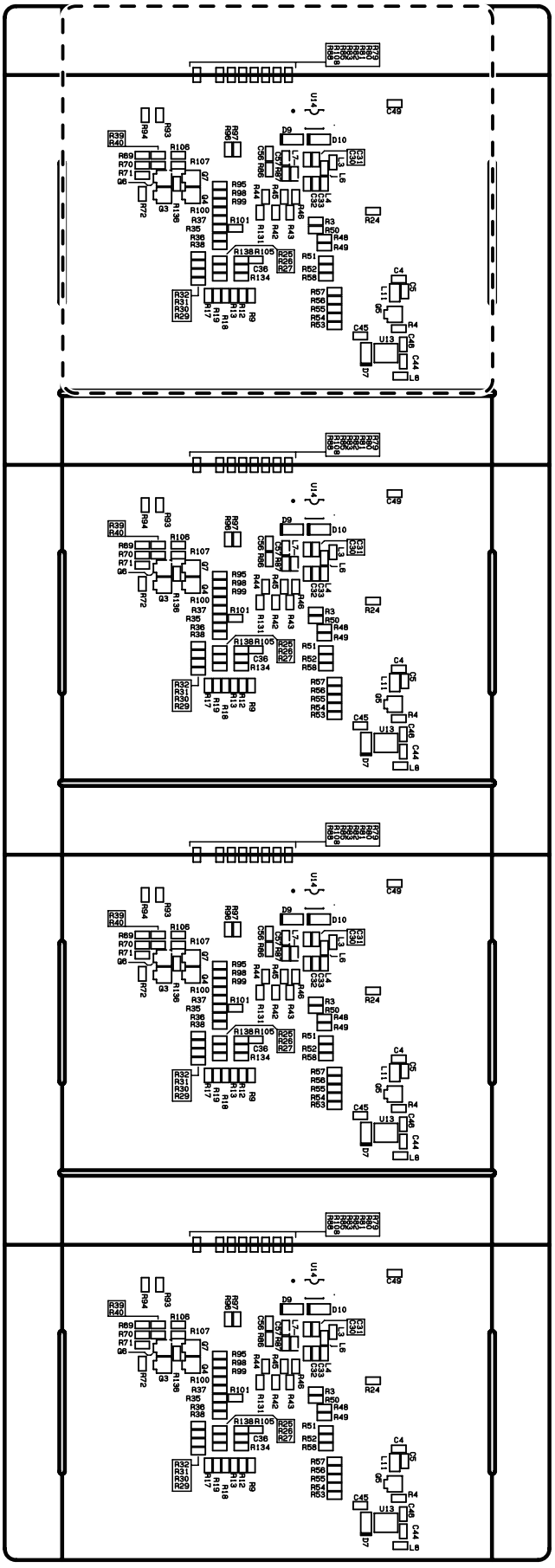

CAUTION **The portion in the dashed box consists of service parts that need to be ordered using part numbers in Bold.**

注意 破線部分は、太字品番で発注する補修部品になります。

CAUTION **Part with numbers in parentheses ( ) cannot be ordered. If you want to order service parts, be sure to use "Child" part numbers (numbers in Bold), which refer to individual parts of a parent part.**

注 意 "( )"付き品番は、発注できません。補修部品を発注する際は、太字品番で発注してください。

GATHER PCB, AI-301DA
Main 基板

PARTS NO.	DESCRIPION.	REMARKS.
V00213000A	PCBA, MAIN+PHONE DM SV	[DM]
V00213010A	PCBA, MAIN+PHONE T/C SV	[T/C] [TM]
V00213020A	PCBA, MAIN+PHONE EUR SV	[KOR] [EUR]
(E95504600A)	PCBA,MAIN AI-301DA DM G	[DM]
(E95504610A)	PCBA,MAIN AI-301DA T/C G	[T/C] [TM]
(E95504620A)	PCBA,MAIN AI-301DA EUR G	[KOR] [EUR]
(E95504900A)	PCBA,PHONE AI-301DA G	

GATHER PCB, I/O FRONT
I/O FRONT 基板

PARTS NO.	DESCRIPION.	REMARKS.
V00213100A	PCBA, FRONT+VR SV	
(E95504700A)	PCBA,FRONT AI-301DA G	
(E95504800A)	PCBA,VR AI-301DA G	

GA PCBA,USB IF K20 G
USB IF 基板

PARTS NO.	DESCRIPION.	REMARKS.
(E95505100A)	GA PCBA,USB IF K20 G	
E95505000A	PCB ASSY,USB IF K20 G	

10. Safety parts
安全部品

Items

REF.NO.	PARTS NO.	DESCRIPTION.	QTY	REMARKS
F1	**E0186771**	T-LAG FUSE,250V 0.5A G	1	⚠

11. Included Accessories

付属品

Included Items

REF.NO.	PARTS NO.	DESCRIPTION .	REMARKS
	D01222900A	OWNERS MNL,J AI-301 G	[DM]
	D01223000B	OWNERS MNL,E/F/S AI-301 G	[KOR], [T/C], [EUR], [TM]
	D01223100B	OWNERS MNL,GINSV AI-301 G	[EUR]
	E01469600A	POWER CORD,PSE TEAC 7A G	⚠ [DM]
	E0178290	POWER CORD,KOR C13 1.8M G	⚠ [KOR]
	3E014150	POWER CORD,UL-G	⚠ [T/C]
	3E014160	POWER CORD,EUR-G	⚠ [EUR]
	3E039940	POWER CORD,TM G	⚠ [TM]
	E02249300B	RMT CONT,RC-1313 G	

NOTES

- **PC boards shown are viewed from parts side.**
- **Parts marked with * require longer delivery time.**
- **The parts with no reference number or no parts number in the exploded views are not supplied.**
- **As regards the resistors and capacitors, refer to the circuit diagrams contained in this manual.**
- **⚠ Parts marked with this sign are safety critical components. They must be replaced with identical components - refer to the appropriate parts list and ensure exact replacement.**
- **Parts of [ ] mark can be used only with the version designated.**

  [JPN] : JAPAN [T/C] : U.S.A./CANADA [KOR] : KOREA
  [EUR] : EUROPE [UK] : U.K. [JEX] : JAPAN & ASIA
  [AUS] : AUSTRALIA [TM] :TAIWAN
  [CHI] : CHINA [ETC] : U.S.A./CANADA/South America

注意

- **プリント基板図は部品面を示しています。**
- ***印の部品は納期が若干かかります。あらかじめご了承ください。**
- **分解図に部番のない部品および品番のない部品は供給できません。**
- **標準の抵抗、コンデンサーは省略してあります。回路図を参照してください。**
- **⚠ 印は安全重要部品です。交換する時は必ず指定の部品を使用してください。**
- **仕向先**

  [JPN] : JAPAN [T/C] : U.S.A./CANADA [KOR] : KOREA
  [EUR] : EUROPE [UK] : U.K. [JEX] : JAPAN & ASIA
  [AUS] : AUSTRALIA [TM] :TAIWAN
  [CHI] : CHINA [ETC] : U.S.A./CANADA/South America

TEAC

SCHEMATIC DIAGRAM

回路図

USB DAC STEREO INTEGRATED AMPLIFIER AI-301DA

CONTENTS 目次

VR/PHONE/FRONT PCB.....2
MAIN PCB (1/8).....3
MAIN PCB (2/8).....4
MAIN PCB (3/8).....5
MAIN PCB (4/8).....6
MAIN PCB (5/8).....7
MAIN PCB (6/8).....8
MAIN PCB (7/8).....9
MAIN PCB (8/8).....10
USB PCB (1/2).....11
USB PCB (2/2).....12

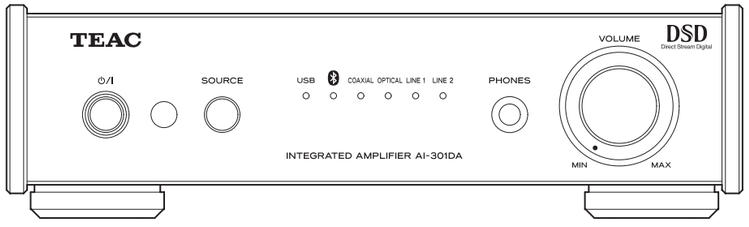

1st Issue,April,2014

D-0027

PCB, VR AI-301DA G

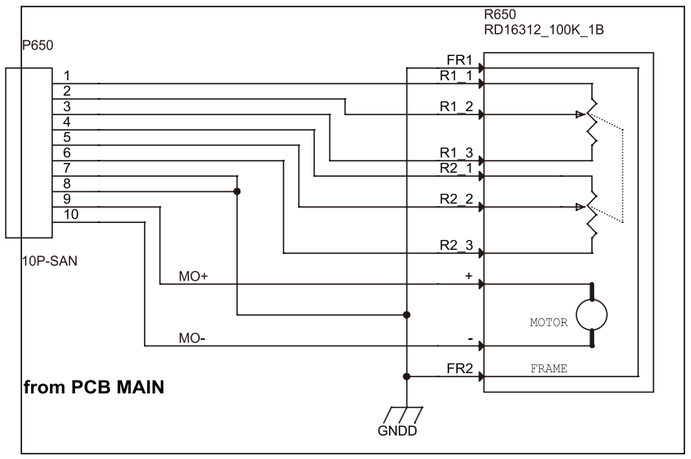

PCB, PHONE AI-301DA G

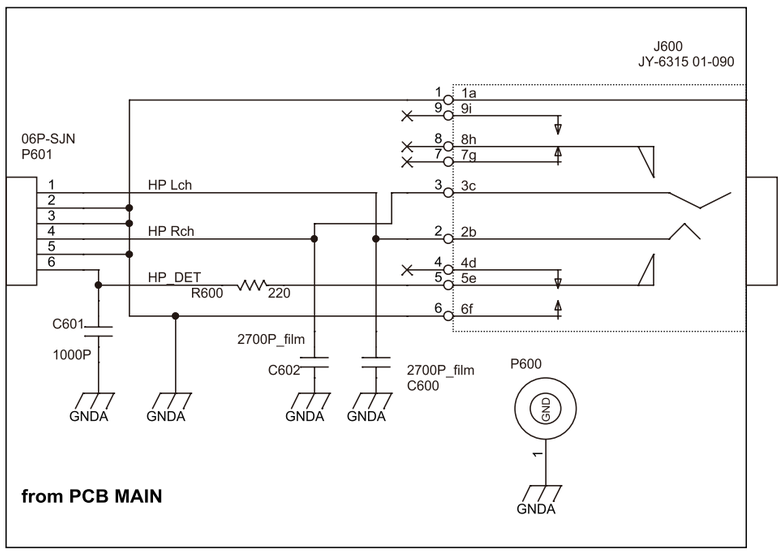

PCB, FRONT AI-301DA G

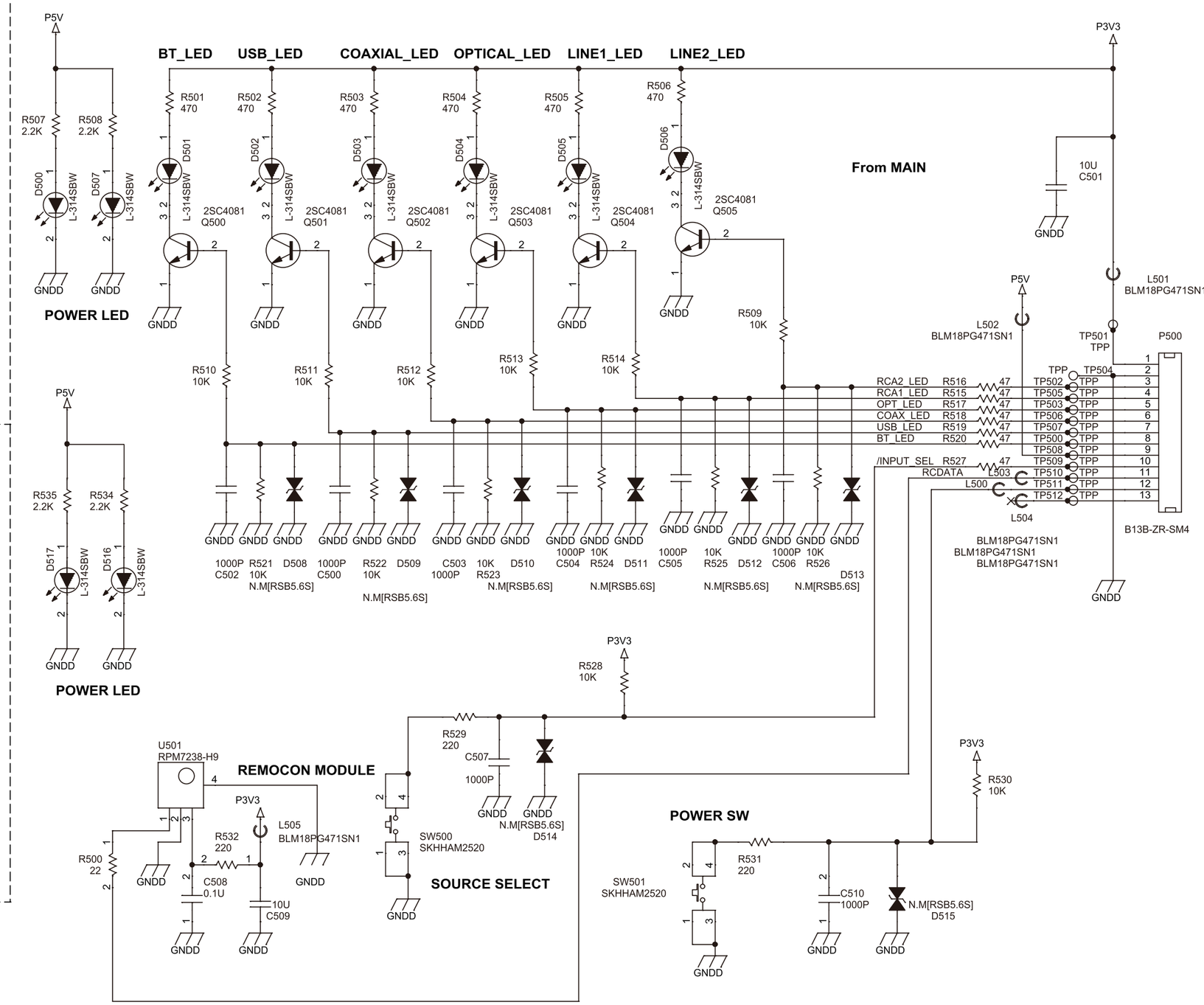

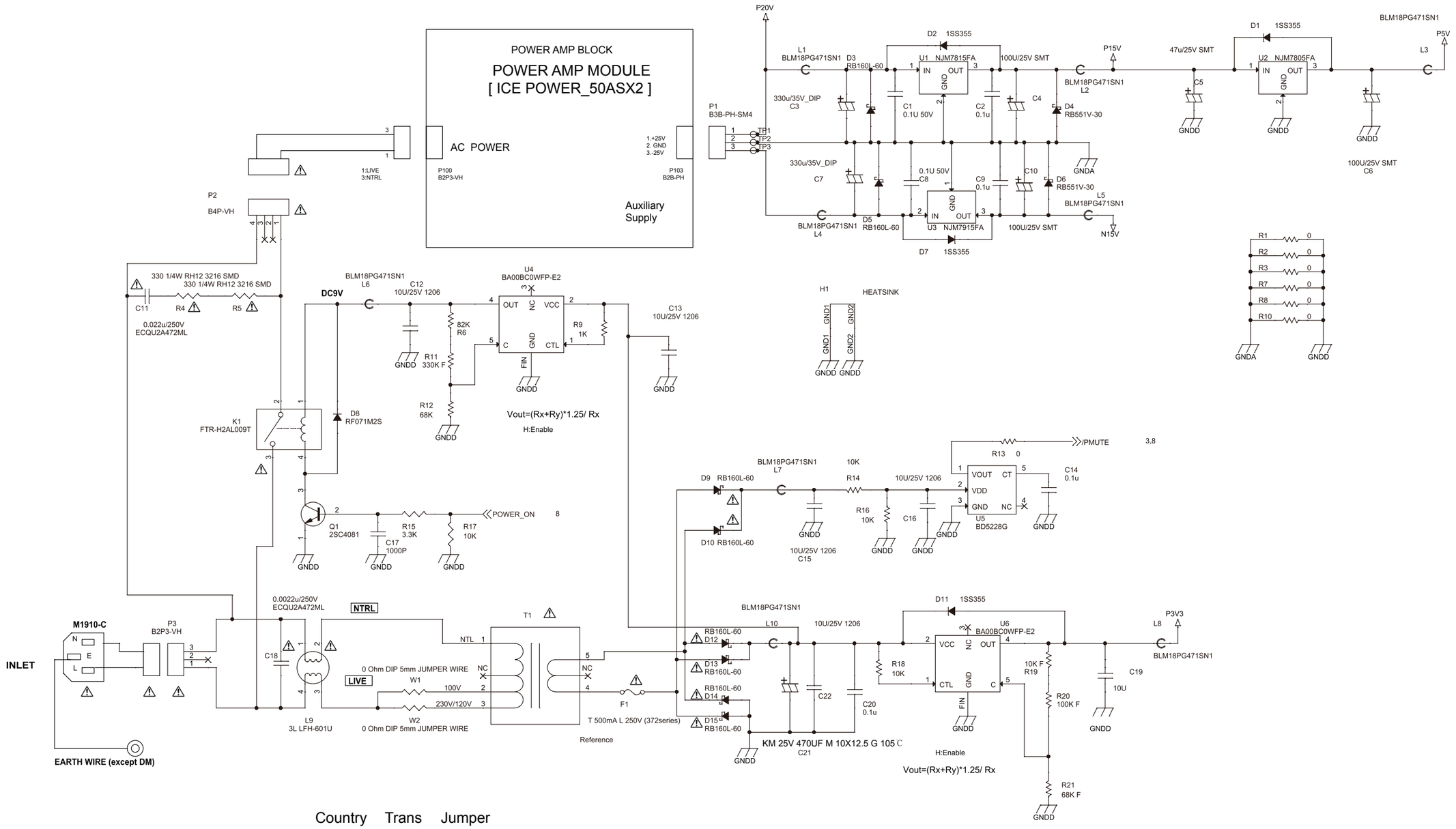

Country	Trans	Jumper
DM	Yellow	W1
T/C	Yellow	W2
EUR	Blue	W2

MAIN PCB (2/8)

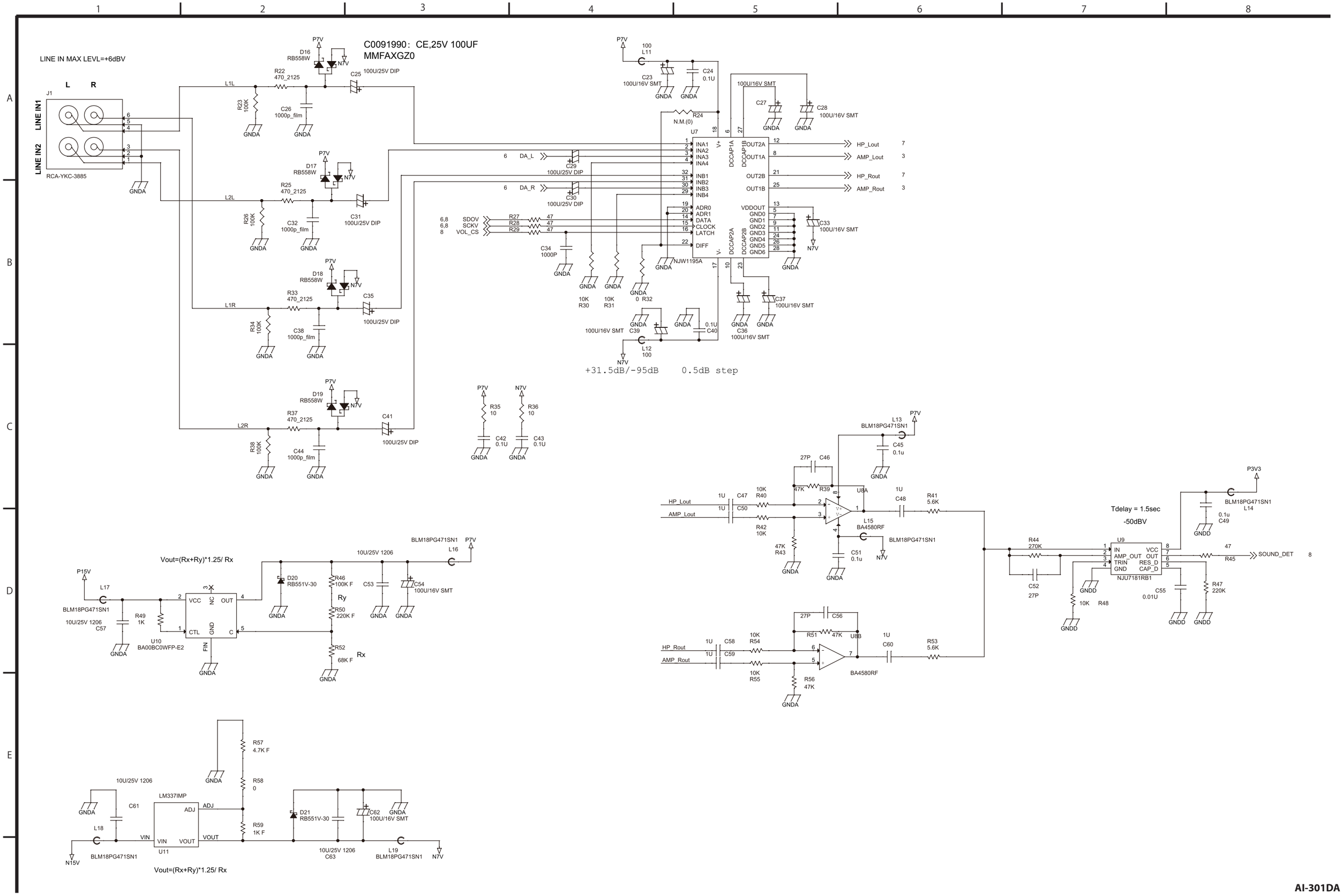
C0091990: CE,25V 100UF
MMFAXGZ0
LINE IN MAX LEVL=+6dBV
J1
LINE IN1
LINE IN2
RCA-YKC-3885
L
R
L1L
L2L
L1R
L2R
R22 470_2125
R25 470_2125
R33 470_2125
R37 470_2125
R23 100K
R26 100K
R34 100K
R38 100K
C26 1000p_film
C32 1000p_film
C38 1000p_film
C44 1000p_film
C25 100U/25V DIP
C31 100U/25V DIP
C35 100U/25V DIP
C41 100U/25V DIP
D16 RB558W
D17 RB558W
D18 RB558W
D19 RB558W
P7V
N7V
GNDA
DA_L
DA_R
C29 100U/25V DIP
C30 100U/25V DIP
SDOV
SCKV
VOL_CS
R27 47
R28 47
R29 47
C34 1000P
R30 10K
R31 10K
R32 0
U7
NJW1195A
INA1
INA2
INA3
INA4
INB1
INB2
INB3
INB4
ADR0
ADR1
DATA
CLOCK
LATCH
DIFF
DCCAP1A
DCCAP1B
DCCAP2A
DCCAP2B
OUT2A
OUT1A
OUT2B
OUT1B
VDDOUT
GND0
GND1
GND2
GND3
GND4
GND5
GND6
HP_Lout
AMP_Lout
HP_Rout
AMP_Rout
C23 100U/16V SMT
C24 0.1U
C27 100U/16V SMT
C28 100U/16V SMT
C33 100U/16V SMT
C36 100U/16V SMT
C37 100U/16V SMT
C39 100U/16V SMT
C40 0.1U
L11 100
L12 100
R24 N.M.(0)
+31.5dB/-95dB 0.5dB step
R35 10
R36 10
C42 0.1U
C43 0.1U
Vout=(Rx+Ry)*1.25/ Rx
P15V
L17
BLM18PG471SN1
10U/25V 1206
C57
R49 1K
U10
BA00BC0WFP-E2
VCC
NC
OUT
CTL
GND
C
FIN
D20 RB551V-30
R46 100K F
Ry
R50 220K F
R52 68K F
Rx
C53
C54 100U/16V SMT
L16
L13 BLM18PG471SN1
C45 0.1u
27P C46
R39 47K
U8A
C47 1U
C50 1U
R40 10K
R42 10K
R43 47K
C48 1U
R41 5.6K
L15 BA4580RF
C51 0.1u
R44 270K
C52 27P
U9
NJU7181RB1
IN
AMP_OUT
TRIN
GND
VCC
OUT
RES_D
CAP_D
R48 10K
C55 0.01U
R47 220K
R45 47
SOUND_DET
P3V3
L14 BLM18PG471SN1
C49 0.1u
Tdelay = 1.5sec
-50dBV
C56 27P
R51 47K
U8B
C58 1U
C59 1U
R54 10K
R55 10K
R56 47K
C60 1U
R53 5.6K
BA4580RF
R57 4.7K F
R58 0
R59 1K F
LM337IMP
ADJ
VIN
VOUT
U11
C61 10U/25V 1206
L18
N15V
D21 RB551V-30
C62 100U/16V SMT
C63 10U/25V 1206
L19 BLM18PG471SN1
Vout=(Rx+Ry)*1.25/ Rx

AMP_EN=H:ena/L:dis

	regular	irregular
/AMP_TML	H	L
/AMP_OC	H	L

[ICE POWER_50ASX2]
POWER AMP MODULE

P102 B7B-PH-K-S — POWER AMP BLOCK — B2P-VH*2 P101 / P104

→ SPEAKER OUT

SUBWOOFER OUT

MAIN PCB (4/8)

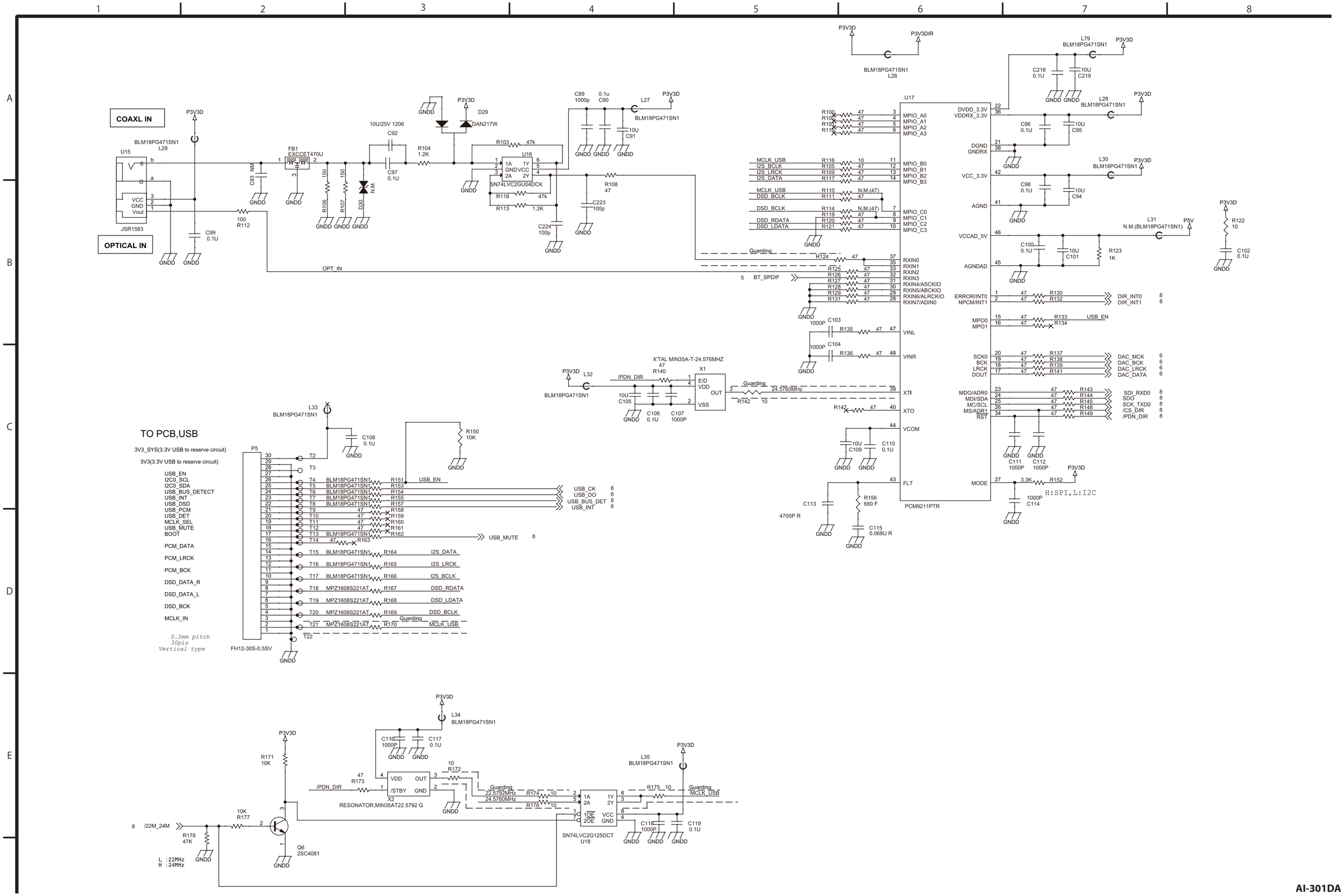
COAXL IN
OPTICAL IN
JSR1583
U15
BLM18PG471SN1
L29
FB1
EXCCET470U
10U/25V 1206
C92
C97
0.1U
R104
1.2K
D29
DAN217W
U16
SN74LVC2GU04DCK
R103
47k
R118
47k
R113
1.2K
C224
100p
C89
1000p
C90
0.1u
L27
BLM18PG471SN1
C91
10U
R108
47
C223
100p
C93
NM
R106
150
R107
150
D30
N.M.
R112
100
C99
0.1U
OPT_IN
P3V3D
P3V3DIR
BLM18PG471SN1
L26
U17
PCM9211PTR
MPIO_A0
MPIO_A1
MPIO_A2
MPIO_A3
MPIO_B0
MPIO_B1
MPIO_B2
MPIO_B3
MPIO_C0
MPIO_C1
MPIO_C2
MPIO_C3
RXIN0
RXIN1
RXIN2
RXIN3
RXIN4/ASCKIO
RXIN5/ABCKIO
RXIN6/ALRCKIO
RXIN7/ADIN0
VINL
VINR
XTI
XTO
VCOM
FLT
MCLK_USB
I2S_BCLK
I2S_LRCK
I2S_DATA
DSD_BCLK
DSD_RDATA
DSD_LDATA
Guarding
BT_SPDIF
DVDD_3.3V
VDDRX_3.3V
DGND
GNDRX
VCC_3.3V
AGND
VCCAD_5V
AGNDAD
ERROR/INT0
NPCM/INT1
MPO0
MPO1
SCK0
BCK
LRCK
DOUT
MDO/ADR0
MDI/SDA
MC/SCL
MS/ADR1
RST
MODE
L79
BLM18PG471SN1
L28
BLM18PG471SN1
L30
BLM18PG471SN1
L31
N.M.(BLM18PG471SN1)
P5V
R122
10
C102
0.1U
C218
0.1U
C219
10U
C96
0.1U
C95
10U
C98
0.1U
C94
10U
C100
0.1U
C101
10U
R123
1K
DIR_INT0
DIR_INT1
USB_EN
DAC_MCK
DAC_BCK
DAC_LRCK
DAC_DATA
SDI_RXD0
SDO
SCK_TXD0
/CS_DIR
/PDN_DIR
C111
1000P
C112
1000P
3.3K
R152
H:SPI,L:I2C
1000P
C114
C113
4700P R
R156
680 F
C115
0.068U R
C109
10U
C110
0.1U
X1
X'TAL MIN35A-T-24.576MHZ
R140
47
/PDN_DIR
L32
BLM18PG471SN1
C105
10U
C106
0.1U
C107
1000P
E/D
VDD
OUT
VSS
24.5760MHz
R142
10
R147
TO PCB,USB
3V3_SYS(3.3V USB to reserve circuit)
3V3(3.3V USB to reserve circuit)
USB_EN
I2C0_SCL
I2C0_SDA
USB_BUS_DETECT
USB_INT
USB_DSD
USB_PCM
USB_DET
MCLK_SEL
USB_MUTE
BOOT
PCM_DATA
PCM_LRCK
PCM_BCK
DSD_DATA_R
DSD_DATA_L
DSD_BCK
MCLK_IN
0.5mm pitch
30pin
Vertical type
P5
FH12-30S-0.5SV
L33
BLM18PG471SN1
C108
0.1U
R150
10K
USB_CK
USB_DO
USB_BUS_DET
USB_INT
USB_MUTE
I2S_DATA
I2S_LRCK
I2S_BCLK
DSD_RDATA
DSD_LDATA
DSD_BCLK
MCLK_USB
Guarding
L34
BLM18PG471SN1
C116
1000P
C117
0.1U
R171
10K
R173
47
/PDN_DIR
X2
RESONATOR,MIN35AT22.5792 G
VDD
OUT
/STBY
GND
R172
10
Guarding
22.5792MHz
24.5760MHz
R174
10
R176
10
L35
BLM18PG471SN1
R175
10
Guarding
MCLK_USB
SN74LVC2G125DCT
U18
C118
1000P
C119
0.1U
/22M_24M
R177
10K
R178
47K
Q6
2SC4081
L :22MHz
H :24MHz
GNDD

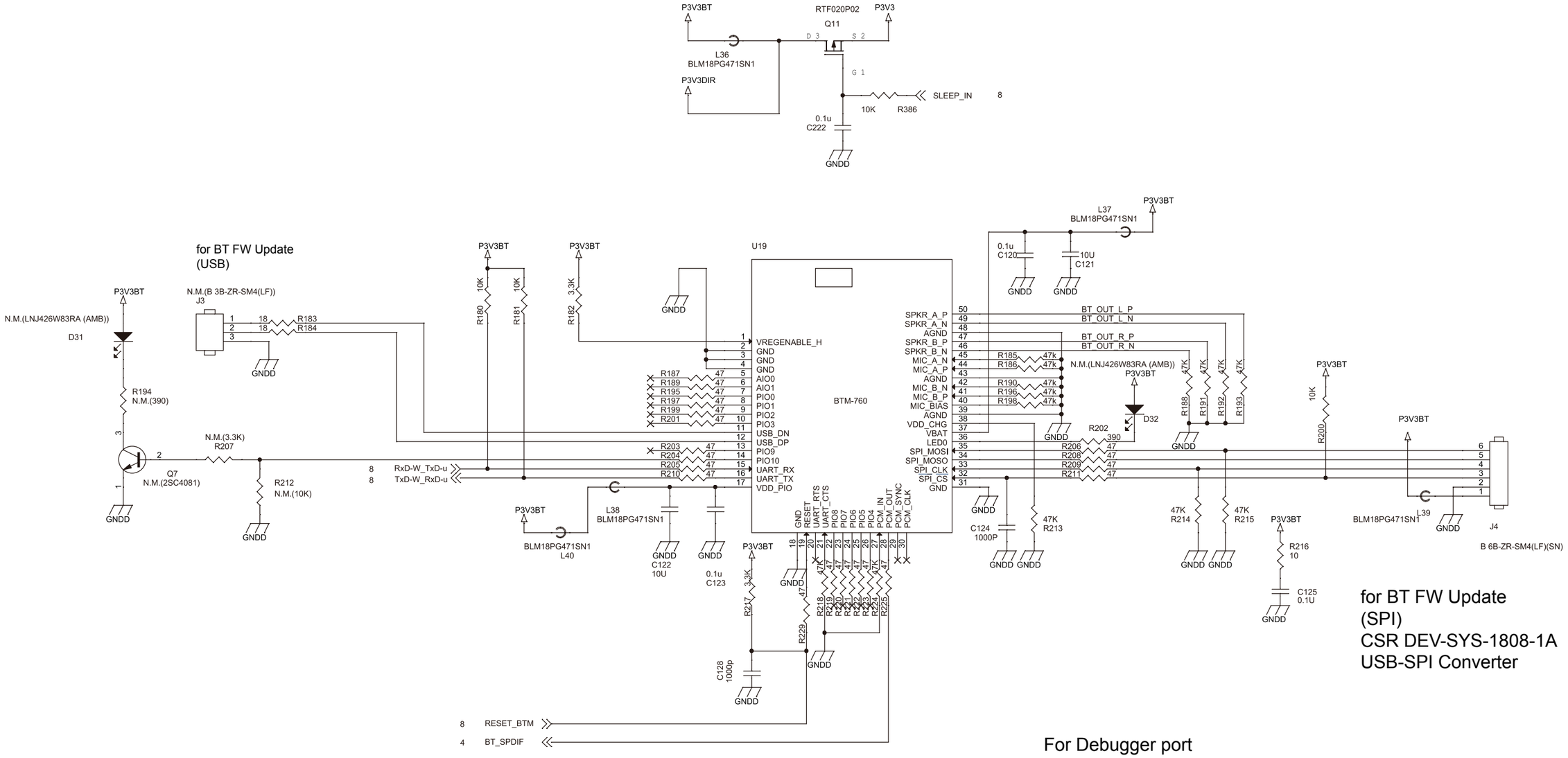
P3V3BT
RTF020P02
Q11
P3V3
D 3
S 2
G 1
L36
BLM18PG471SN1
P3V3DIR
SLEEP_IN
8
10K
R386
0.1u
C222
GNDD
for BT FW Update
(USB)
P3V3BT
N.M.(B 3B-ZR-SM4(LF))
J3
N.M.(LNJ426W83RA (AMB))
D31
R183
R184
R194
N.M.(390)
N.M.(3.3K)
R207
Q7
N.M.(2SC4081)
R212
N.M.(10K)
RxD-W_TxD-u
TxD-W_RxD-u
R180
R181
R182
10K
3.3K
U19
BTM-760
VREGENABLE_H
GND
AIO0
AIO1
PIO0
PIO1
PIO2
PIO3
USB_DN
USB_DP
PIO9
PIO10
UART_RX
UART_TX
VDD_PIO
R187
R189
R195
R197
R199
R201
R203
R204
R205
R210
47
L38
BLM18PG471SN1
C122
10U
0.1u
C123
L40
BLM18PG471SN1
RESET
UART_RTS
UART_CTS
PIO8
PIO7
PIO6
PIO5
PIO4
PCM_IN
PCM_OUT
PCM_SYNC
PCM_CLK
R217
R218
R219
R220
R221
R222
R223
R224
R225
R229
C128
1000p
RESET_BTM
BT_SPDIF
L37
BLM18PG471SN1
0.1u
C120
10U
C121
SPKR_A_P
SPKR_A_N
AGND
SPKR_B_P
SPKR_B_N
MIC_A_N
MIC_A_P
MIC_B_N
MIC_B_P
MIC_BIAS
VDD_CHG
VBAT
LED0
SPI_MOSI
SPI_MOSO
SPI_CLK
SPI_CS
BT_OUT_L_P
BT_OUT_L_N
BT_OUT_R_P
BT_OUT_R_N
R185
R186
R190
R196
R198
N.M.(LNJ426W83RA (AMB))
D32
R202
390
R206
R208
R209
R211
C124
1000P
47K
R213
R188
R191
R192
R193
R214
R215
R216
10
C125
0.1U
R200
L39
BLM18PG471SN1
J4
B 6B-ZR-SM4(LF)(SN)
for BT FW Update
(SPI)
CSR DEV-SYS-1808-1A
USB-SPI Converter
For Debugger port

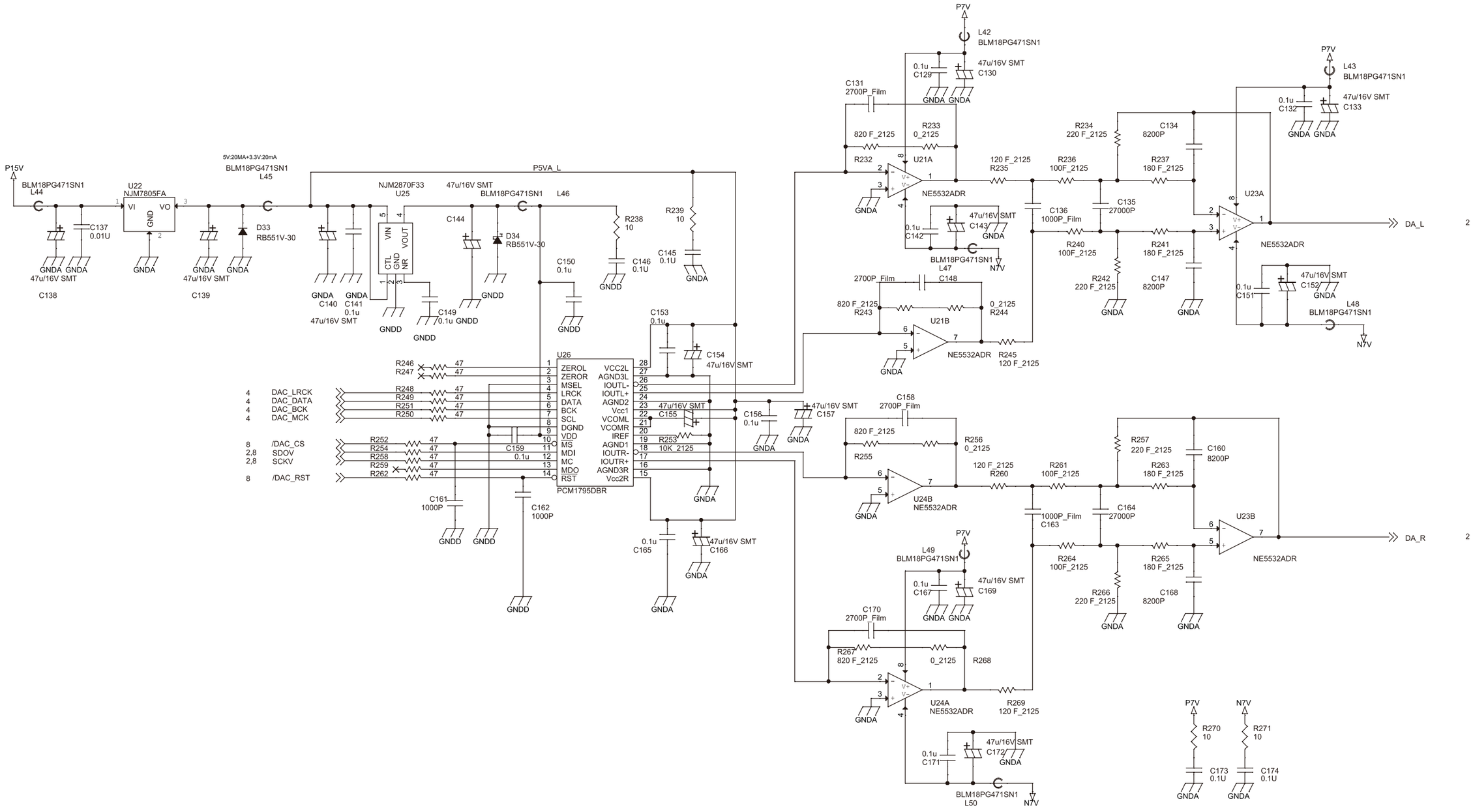
P15V
BLM18PG471SN1 L44
U22 NJM7805FA
VI VO GND
C137 0.01U
GNDA GNDA 47u/16V SMT C138
GNDA GNDA
5V:20MA+3.3V:20mA
BLM18PG471SN1 L45
D33 RB551V-30
GNDA 47u/16V SMT C139
GNDA GNDA
P5VA_L
NJM2870F33 U25
VIN GND CTL NR VOUT
GNDA C140
GNDA C141 0.1u 47u/16V SMT
C149 0.1u GNDD
GNDD
47u/16V SMT
BLM18PG471SN1 L46
C144
D34 RB551V-30
GNDD
C150 0.1u
GNDD
R238 10
C146 0.1U
GNDD
R239 10
C145 0.1U
GNDA
C153 0.1u
C154 47u/16V SMT
U26
ZEROL VCC2L
ZEROR AGND3L
MSEL IOUTL-
LRCK IOUTL+
DATA AGND2
BCK Vcc1
SCL VCOML
DGND VCOMR
VDD IREF
MS AGND1
MDI IOUTR-
MC IOUTR+
MDO AGND3R
RST Vcc2R
PCM1795DBR
R246 47
R247 47
R248 47
R249 47
R251 47
R250 47
R252 47
R254 47
R258 47
R259 47
R262 47
4 DAC_LRCK
4 DAC_DATA
4 DAC_BCK
4 DAC_MCK
8 /DAC_CS
2,8 SDOV
2,8 SCKV
8 /DAC_RST
C159 0.1u
C161 1000P
GNDD GNDD
C162 1000P
GNDD
47u/16V SMT
C155
R253 10K_2125
GNDA
0.1u C165
47u/16V SMT C166
GNDA
C156 0.1u
47u/16V SMT C157
GNDA GNDA
P7V
L42 BLM18PG471SN1
0.1u C129
47u/16V SMT C130
GNDA GNDA
C131 2700P_Film
820 F_2125
R233 0_2125
R232
U21A
NE5532ADR
GNDA
0.1u C142
47u/16V SMT C143
GNDA
BLM18PG471SN1 L47
N7V
120 F_2125 R235
R234 220 F_2125
C134 8200P
R236 100F_2125
R237 180 F_2125
C136 1000P_Film
C135 27000P
R240 100F_2125
R241 180 F_2125
R242 220 F_2125
C147 8200P
GNDA GNDA
P7V
L43 BLM18PG471SN1
0.1u C132
47u/16V SMT C133
GNDA GNDA
U23A
NE5532ADR
DA_L
2
0.1u C151
47u/16V SMT C152
GNDA
L48 BLM18PG471SN1
N7V
C148 2700P_Film
820 F_2125 R243
0_2125 R244
U21B
NE5532ADR
R245 120 F_2125
GNDA
C158 2700P_Film
820 F_2125
R255
R256 0_2125
U24B
NE5532ADR
GNDA
120 F_2125 R260
R257 220 F_2125
C160 8200P
R261 100F_2125
R263 180 F_2125
C164 27000P
1000P_Film C163
R264 100F_2125
R265 180 F_2125
R266 220 F_2125
C168 8200P
GNDA GNDA
U23B
NE5532ADR
DA_R
2
P7V
L49 BLM18PG471SN1
0.1u C167
47u/16V SMT C169
GNDA GNDA
C170 2700P_Film
R267 820 F_2125
0_2125 R268
U24A
NE5532ADR
R269 120 F_2125
GNDA
0.1u C171
47u/16V SMT C172
GNDA
BLM18PG471SN1 L50
N7V
P7V
R270 10
C173 0.1U
GNDA
N7V
R271 10
C174 0.1U
GNDA

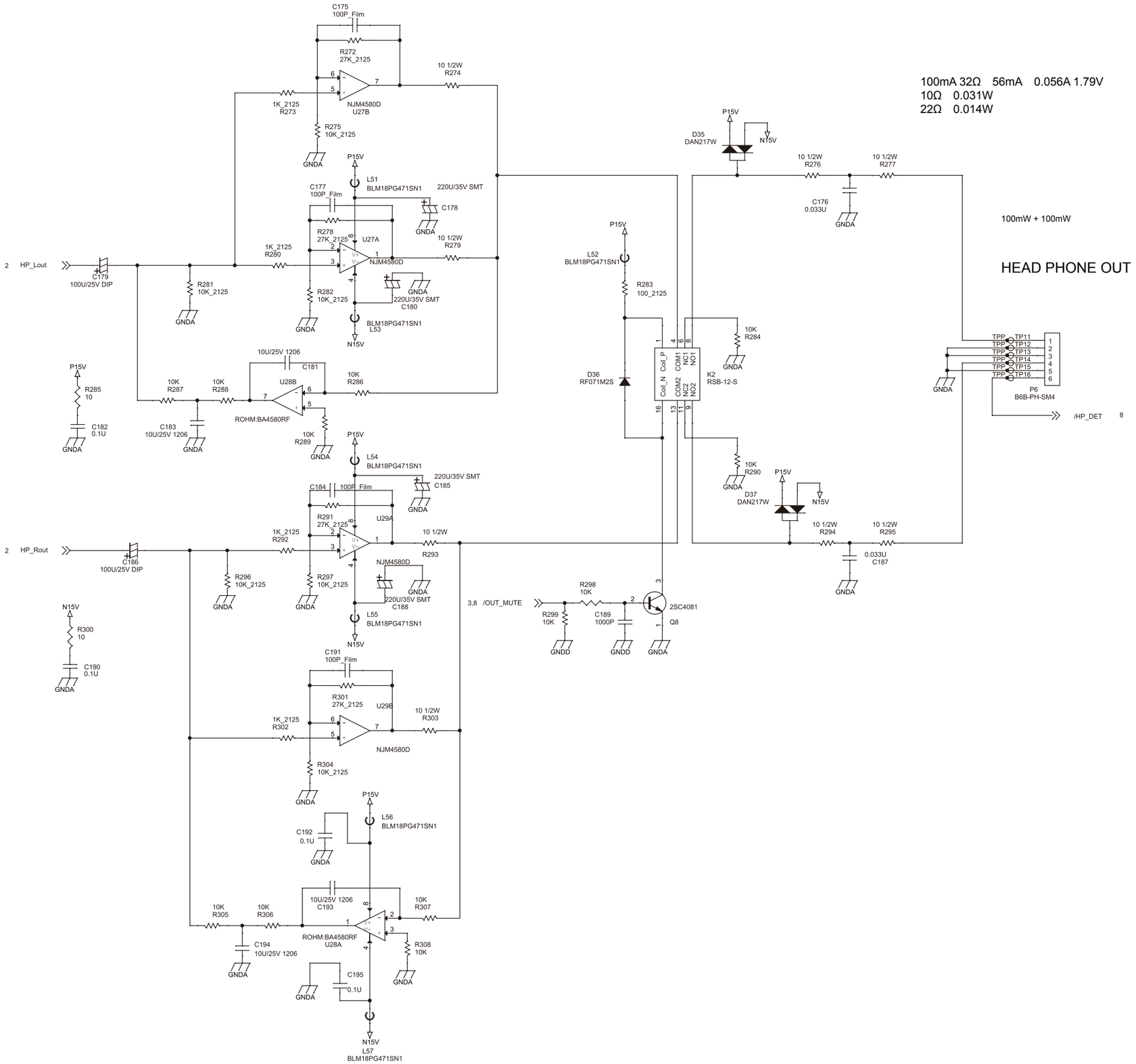
100mA 32Ω 56mA 0.056A 1.79V
10Ω 0.031W
22Ω 0.014W
100mW + 100mW
HEAD PHONE OUT
C175 100P_Film
R272 27K_2125
10 1/2W R274
1K_2125 R273
NJM4580D U27B
R275 10K_2125
GNDA
P15V
L51 BLM18PG471SN1
220U/35V SMT C178
C177 100P_Film
R278 27K_2125
U27A
NJM4580D
10 1/2W R279
1K_2125 R280
2 HP_Lout
C179 100U/25V DIP
R281 10K_2125
R282 10K_2125
220U/35V SMT C180
BLM18PG471SN1 L53
N15V
10U/25V 1206 C181
P15V
R285 10
C182 0.1U
10K R287
10K R288
U28B
ROHM:BA4580RF
10K R286
C183 10U/25V 1206
10K R289
L54 BLM18PG471SN1
220U/35V SMT C185
C184 100P_Film
R291 27K_2125
U29A
1K_2125 R292
2 HP_Rout
C186 100U/25V DIP
R296 10K_2125
R297 10K_2125
NJM4580D
10 1/2W R293
220U/35V SMT C188
L55 BLM18PG471SN1
N15V
R300 10
C190 0.1U
C191 100P_Film
R301 27K_2125
U29B
1K_2125 R302
10 1/2W R303
NJM4580D
R304 10K_2125
L56 BLM18PG471SN1
C192 0.1U
10U/25V 1206 C193
10K R305
10K R306
10K R307
ROHM:BA4580RF U28A
C194 10U/25V 1206
R308 10K
C195 0.1U
L57 BLM18PG471SN1
D35 DAN217W
N15V
10 1/2W R276
10 1/2W R277
C176 0.033U
L52 BLM18PG471SN1
R283 100_2125
D36 RF071M2S
K2 RSB-12-S
Coil_P
Coil_N
COM1
NC1
NO1
COM2
NC2
NO2
10K R284
10K R290
D37 DAN217W
10 1/2W R294
10 1/2W R295
0.033U C187
3,8 /OUT_MUTE
R298 10K
R299 10K
C189 1000P
2SC4081
Q8
GNDD
TPP TP11
TPP TP12
TPP TP13
TPP TP14
TPP TP15
TPP TP16
P6 B6B-PH-SM4
/HP_DET 8

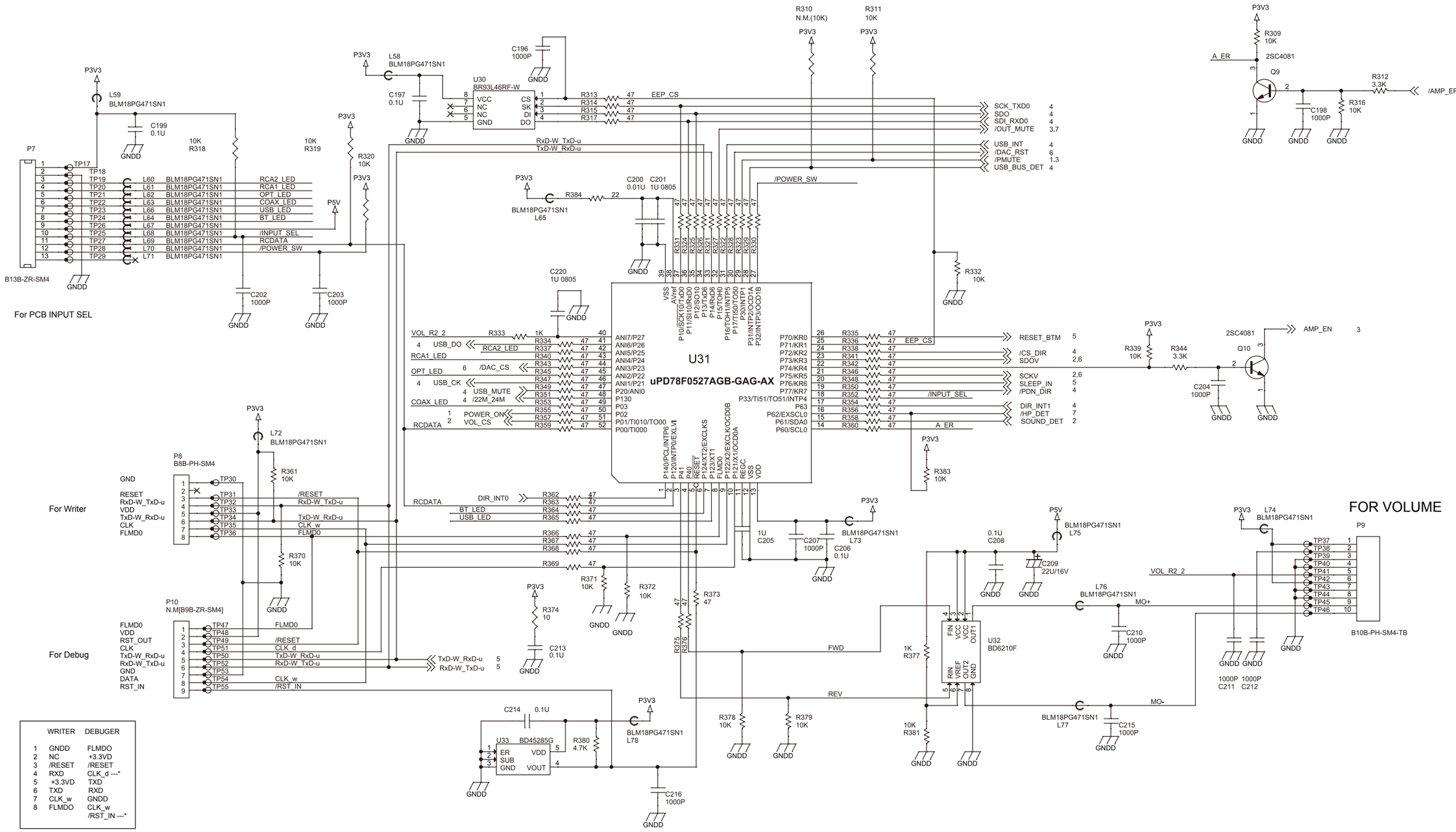
P7
B13B-ZR-SM4
For PCB INPUT SEL
TP17
TP18
TP19
TP20
TP21
TP22
TP23
TP24
TP26
TP25
TP27
TP28
TP29
L59
BLM18PG471SN1
C199
0.1U
10K
R318
10K
R319
R320
10K
P5V
C202
1000P
C203
1000P
L60 BLM18PG471SN1 RCA2_LED
L61 BLM18PG471SN1 RCA1_LED
L62 BLM18PG471SN1 OPT_LED
L63 BLM18PG471SN1 COAX_LED
L66 BLM18PG471SN1 USB_LED
L64 BLM18PG471SN1 BT_LED
L67 BLM18PG471SN1
L68 BLM18PG471SN1 /INPUT_SEL
L69 BLM18PG471SN1 RCDATA
L70 BLM18PG471SN1 /POWER_SW
L71 BLM18PG471SN1
L58
BLM18PG471SN1
C197
0.1U
U30
BR93L46RF-W
VCC
NC
NC
GND
CS
SK
DI
DO
C196
1000P
R313 47 EEP_CS
R314 47
R315 47
R317 47
RxD-W_TxD-u
TxD-W_RxD-u
R310
N.M.(10K)
R311
10K
SCK_TXD0 4
SDO 4
SDI_RXD0 4
/OUT_MUTE 3,7
USB_INT 4
/DAC_RST 6
/PMUTE 1,3
USB_BUS_DET 4
/POWER_SW
L65
BLM18PG471SN1
R384 22
C200 0.01U
C201 1U 0805
R331 47
R324 47
R325 47
R326 47
R327 47
R322 47
R328 47
R323 47
R329 47
R330 47
R332
10K
C220
1U 0805
U31
uPD78F0527AGB-GAG-AX
VSS
AVref
P10/SCK1/INTP6
P11/SI1/RxD1
P12/SO10
P13/TxD6
P14/RxD6
P15/TOH0
P16/TOH1/INTP5
P17/TI51/TO51
P30/INTP1
P31/INTP2/OCD1A
P32/INTP3/OCD1B
VOL_R2_2
USB_DO 4
RCA2_LED
RCA1_LED
OPT_LED
/DAC_CS 6
USB_CK 4
USB_MUTE 4
/22M_24M 4
COAX_LED
POWER_ON 1
VOL_CS 2
RCDATA
R333 1K
R334 47
R337 47
R340 47
R343 47
R345 47
R347 47
R349 47
R351 47
R353 47
R355 47
R357 47
R359 47
ANI7/P27
ANI6/P26
ANI5/P25
ANI4/P24
ANI3/P23
ANI2/P22
ANI1/P21
P20/ANI0
P130
P03
P02
P01/TI010/TO00
P00/TI000
P140/PCL/INTP6
P120/INTP0/EXLVI
P41
P40
RESET
P124/XT2/EXCLKS
P123/XT1
FLMD0
P122/X2/EXCLK/OCD0B
P121/X1/OCD0A
REGC
VSS
VDD
P70/KR0 RESET_BTM 5
P71/KR1
P72/KR2 /CS_DIR 4
P73/KR3 SDOV 2,6
P74/KR4
P75/KR5 SCKV 2,6
P76/KR6 /SLEEP_IN 5
P77/KR7 /PDN_DIR 4
P33/TI51/TO51/INTP4 /INPUT_SEL
P63 DIR_INT1 4
P62/EXSCL0 /HP_DET 7
P61/SDA0 SOUND_DET 2
P60/SCL0 A_ER
R335 47
R336 47 EEP_CS
R338 47
R341 47
R342 47
R346 47
R348 47
R350 47
R352 47
R354 47
R356 47
R358 47
R360 47
P3V3
R309
10K
A_ER
2SC4081
Q9
R312
3.3K
/AMP_ERROR 3
C198
1000P
R316
10K
GNDD
P8
B8B-PH-SM4
For Writer
GND
RESET
RxD-W_TxD-u
VDD
TxD-W_RxD-u
CLK
FLMD0
TP30
TP31
TP32
TP33
TP34
TP35
TP36
/RESET
RxD-W_TxD-u
TxD-W_RxD-u
CLK_w
FLMD0
L72
BLM18PG471SN1
R361
10K
R370
10K
P10
N.M[B9B-ZR-SM4]
For Debug
FLMD0
VDD
RST_OUT
CLK
TxD-W_RxD-u
RxD-W_TxD-u
GND
DATA
RST_IN
TP47
TP48
TP49
TP51
TP50
TP52
TP53
TP54
TP55
FLMD0
/RESET
CLK_d
TxD-W_RxD-u
RxD-W_TxD-u
CLK_w
/RST_IN
TxD-W_RxD-u 5
RxD-W_TxD-u 5
DIR_INT0
BT_LED
USB_LED
R362 47
R363 47
R364 47
R365 47
R366 47
R367 47
R368 47
R369 47
R371
10K
R372
10K
R374
10
C213
0.1U
R373
47
R375 47
R376 47
1U
C205
C207
1000P
C206
0.1U
BLM18PG471SN1
L73
C214 0.1U
U33 BD45285G
ER
SUB
GND
VDD
VOUT
R380
4.7K
BLM18PG471SN1
L78
C216
1000P
R378
10K
R379
10K
R383
10K
FWD
REV
1K
R377
10K
R381
U32
BD6210F
FIN
VCC
VCC
OUT1
RIN
VREF
OUT2
GND
0.1U
C208
C209
22U/16V
L74
BLM18PG471SN1
L75
BLM18PG471SN1
L76
BLM18PG471SN1
MO+
MO-
BLM18PG471SN1
L77
C210
1000P
C215
1000P
FOR VOLUME
P9
B10B-PH-SM4-TB
TP37
TP38
TP39
TP40
TP41
TP42
TP43
TP44
TP45
TP46
1000P 1000P
C211 C212
P3V3
R339
10K
R344
3.3K
2SC4081
Q10
AMP_EN 3
C204
1000P
WRITER DEBUGER
1 GNDD FLMDO
2 NC +3.3VD
3 /RESET /RESET
4 RXD CLK_d ---*
5 +3.3VD TXD
6 TXD RXD
7 CLK_w GNDD
8 FLMDO CLK_w
/RST_IN ---*

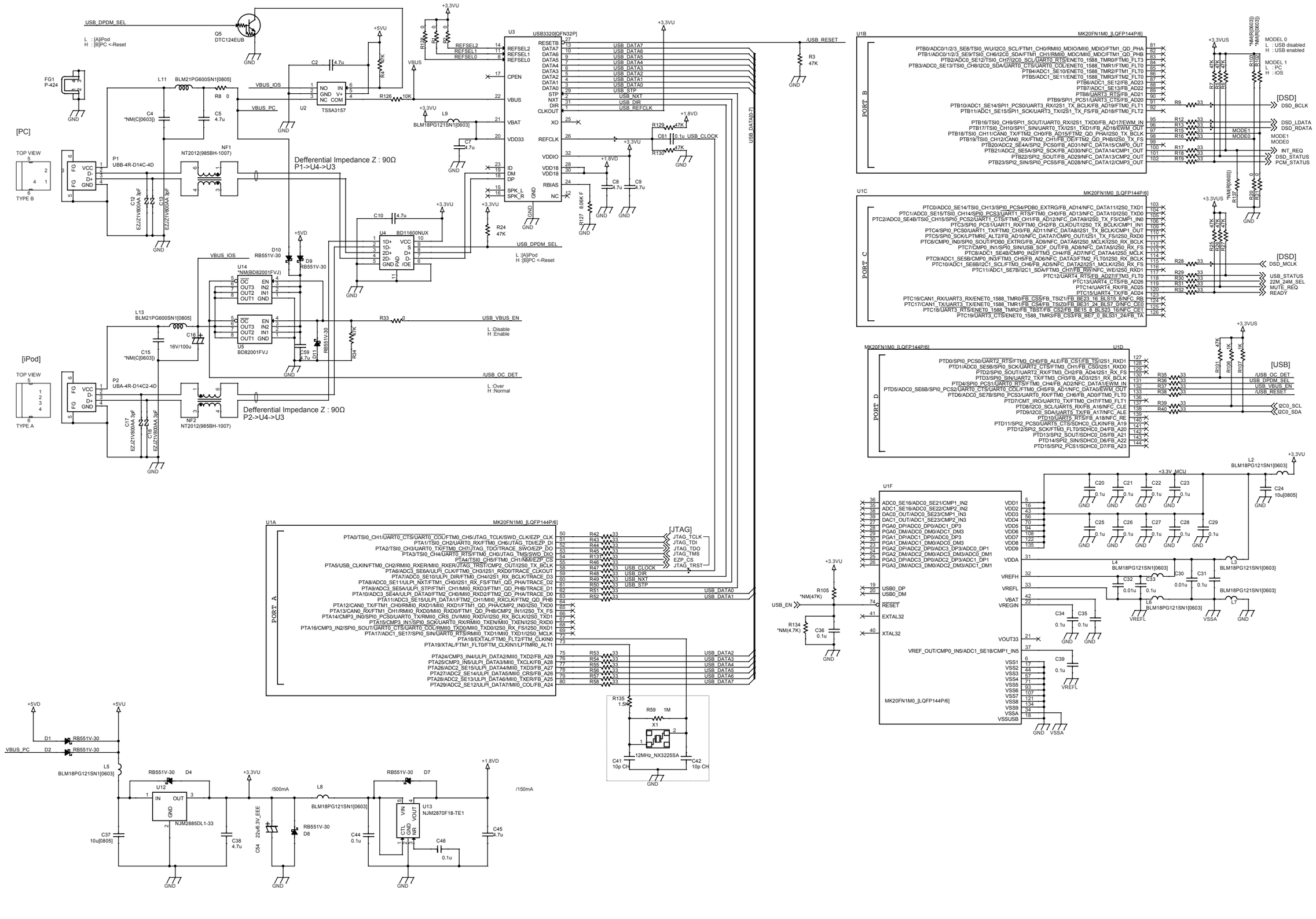
USB_DPDM_SEL
L : [A]iPod
H : [B]PC <-Reset
Q5
DTC124EUB
+5VU
FG1
P-424
L11 BLM21PG600SN1[0805]
R8 0
VBUS_IOS
VBUS_PC
C4
*NM(C[0603])
C5
4.7u
[PC]
TOP VIEW
TYPE B
P1
UBB-4R-D14C-4D
NF1
NT2012(985BH-1007)
C14
EZJZ1V800AA 3pF
C13
EZJZ1V800AA 3pF
Defferential Impedance Z : 90Ω
P1->U4->U3
C2
4.7u
R4
47K
U2
TS5A3157
R126
10K
VBUS
+3.3VU
L9
BLM18PG121SN1[0603]
C7
4.7u
R128
0
R2
0
U3
USB3320[QFN32P]
REFSEL2
REFSEL1
REFSEL0
CPEN
VBUS
VBAT
VDD33
ID
DM
DP
SPK_L
SPK_R
RESETB
DATA7
DATA6
DATA5
DATA4
DATA3
DATA2
DATA1
DATA0
STP
NXT
DIR
CLKOUT
XO
REFCLK
VDDIO
VDD18
VDD18
RBIAS
NC
USB_DATA7
USB_DATA6
USB_DATA5
USB_DATA4
USB_DATA3
USB_DATA2
USB_DATA1
USB_DATA0
USB_STP
USB_NXT
USB_DIR
USB_REFCLK
USB_DATA[0-7]
/USB_RESET
R3
47K
R129
47K
C61
0.1u USB_CLOCK
R130
47K
+1.8VD
C8
4.7u
C9
4.7u
R127
8.06K F
R24
47K
C10
4.7u
U4
BD11600NUX
1D+
1D-
2D+
2D-
GND
VCC
S
D+
D-
/OE
PAD
USB_DPDM_SEL
L :[A]iPod
H :[B]PC <-Reset
D10
RB551V-30
D9
RB551V-30
+5VD
VBUS_IOS
U14
*NM(BD82001FVJ)
OC
OUT3
OUT2
OUT1
EN
IN2
IN1
GND
L13
BLM21PG600SN1[0805]
C16
16V/100u
C15
*NM(C[0603])
U5
BD82001FVJ
C59
4.7u
D11
RB551V-30
R33
0
USB_VBUS_EN
L :Disable
H :Enable
/USB_OC_DET
L :Over
H :Normal
[iPod]
TOP VIEW
TYPE A
P2
UBA-4R-D14C2-4D
NF2
NT2012(985BH-1007)
C17
EZJZ1V800AA 3pF
C18
EZJZ1V800AA 3pF
Defferential Impedance Z : 90Ω
P2->U4->U3
U1A
MK20FN1M0_[LQFP144P/6]
PORT A
PTA0/TSI0_CH1/UART0_CTS/UART0_COL/FTM0_CH5/JTAG_TCLK/SWD_CLK/EZP_CLK
PTA1/TSI0_CH2/UART0_RX/FTM0_CH6/JTAG_TDI/EZP_DI
PTA2/TSI0_CH3/UART0_TX/FTM0_CH7/JTAG_TDO/TRACE_SWO/EZP_DO
PTA3/TSI0_CH4/UART0_RTS/FTM0_CH0/JTAG_TMS/SWD_DIO
PTA4/TSI0_CH5/FTM0_CH1/NMI/EZP_CS
PTA5/USB_CLKIN/FTM0_CH2/RMII0_RXER/MII0_RXER/JTAG_TRST/CMP2_OUT/I2S0_TX_BCLK
PTA6/ADC3_SE6A/ULPI_CLK/FTM0_CH3/I2S1_RXD0/TRACE_CLKOUT
PTA7/ADC0_SE10/ULPI_DIR/FTM0_CH4/I2S1_RX_BCLK/TRACE_D3
PTA8/ADC0_SE11/ULPI_NXT/FTM1_CH0/I2S1_RX_FS/FTM1_QD_PHA/TRACE_D2
PTA9/ADC3_SE5A/ULPI_STP/FTM1_CH1/MII0_RXD3/FTM1_QD_PHB/TRACE_D1
PTA10/ADC3_SE4A/ULPI_DATA0/FTM2_CH0/MII0_RXD2/FTM2_QD_PHA/TRACE_D0
PTA11/ADC3_SE15/ULPI_DATA1/FTM2_CH1/MII0_RXCLK/FTM2_QD_PHB
PTA12/CAN0_TX/FTM1_CH0/RMII0_RXD1/MII0_RXD1/FTM1_QD_PHA/CMP2_IN0/I2S0_TXD0
PTA13/CAN0_RX/FTM1_CH1/RMII0_RXD0/MII0_RXD0/FTM1_QD_PHB/CMP2_IN1/I2S0_TX_FS
PTA14/CMP3_IN0/SPI0_PCS0/UART0_TX/RMII0_CRS_DV/MII0_RXD1/I2S0_RX_BCLK/I2S0_TXD1
PTA15/CMP3_IN1/SPI0_SCK/UART0_RX/RMII0_TXEN/MII0_TXEN/I2S0_RXD0
PTA16/CMP3_IN2/SPI0_SOUT/UART0_CTS/UART0_COL/RMII0_TXD0/MII0_TXD0/I2S0_RX_FS/I2S0_RXD1
PTA17/ADC1_SE17/SPI0_SIN/UART0_RTS/RMII0_TXD1/MII0_TXD1/I2S0_MCLK
PTA18/EXTAL/FTM1_FLT0/FTM_CLKIN1/LPTMR0_ALT1
PTA19/XTAL/FTM1_FLT0/FTM_CLKIN1/LPTMR0_ALT1
PTA24/CMP3_IN4/ULPI_DATA2/MII0_TXD2/FB_A29
PTA25/CMP3_IN5/ULPI_DATA3/MII0_TXCLK/FB_A28
PTA26/ADC2_SE15/ULPI_DATA4/MII0_TXD3/FB_A27
PTA27/ADC2_SE14/ULPI_DATA5/MII0_CRS/FB_A26
PTA28/ADC2_SE13/ULPI_DATA6/MII0_TXER/FB_A25
PTA29/ADC2_SE12/ULPI_DATA7/MII0_COL/FB_A24
R42 33
R43 33
R44 33
R45 33
R131 33
R46 33
R47 33
R48 33
R49 33
R50 33
R51 33
R52 33
R53 33
R54 33
R55 33
R56 33
R57 33
R58 33
[JTAG]
JTAG_TCLK
JTAG_TDI
JTAG_TDO
JTAG_TMS
EZP_CS
JTAG_TRST
USB_CLOCK
USB_DIR
USB_NXT
USB_STP
USB_DATA0
USB_DATA1
USB_DATA2
USB_DATA3
USB_DATA4
USB_DATA5
USB_DATA6
USB_DATA7
R135
1.5K
R59 1M
X1
12MHz_NX3225SA
C41
10p CH
C42
10p CH
D1
RB551V-30
D2
RB551V-30
VBUS_PC
L5
BLM18PG121SN1[0603]
RB551V-30 D4
U12
IN
OUT
GND
NJM2885DL1-33
C37
10u[0805]
C38
4.7u
+3.3VU
/500mA
L8
BLM18PG121SN1[0603]
C54
22u6.3V_EEE
RB551V-30
D8
RB551V-30 D7
U13
NJM2870F18-TE1
CTL
GND
NR
VIN
VOUT
C44
0.1u
C46
0.1u
C45
4.7u
+1.8VD
/150mA
U1B
MK20FN1M0_[LQFP144P/6]
PORT B
PTB0/ADC0/1/2/3_SE8/TSI0_WU/I2C0_SCL/FTM1_CH0/RMII0_MDIO/MII0_MDIO/FTM1_QD_PHA
PTB1/ADC0/1/2/3_SE9/TSI0_CH6/I2C0_SDA/FTM1_CH1/RMII0_MDC/MII0_MDC/FTM1_QD_PHB
PTB2/ADC0_SE12/TSI0_CH7/I2C0_SCL/UART0_RTS/ENET0_1588_TMR0/FTM0_FLT3
PTB3/ADC0_SE13/TSI0_CH8/I2C0_SDA/UART0_CTS/UART0_COL/ENET0_1588_TMR1/FTM0_FLT0
PTB4/ADC1_SE10/ENET0_1588_TMR2/FTM1_FLT0
PTB5/ADC1_SE11/ENET0_1588_TMR3/FTM2_FLT0
PTB6/ADC1_SE12/FB_AD23
PTB7/ADC1_SE13/FB_AD22
PTB8/UART3_RTS/FB_AD21
PTB9/SPI1_PCS1/UART3_CTS/FB_AD20
PTB10/ADC1_SE14/SPI1_PCS0/UART3_RX/I2S1_TX_BCLK/FB_AD19/FTM0_FLT1
PTB11/ADC1_SE15/SPI1_SCK/UART3_TX/I2S1_TX_FS/FB_AD18/FTM0_FLT2
PTB16/TSI0_CH9/SPI1_SOUT/UART0_RX/I2S1_TXD0/FB_AD17/EWM_IN
PTB17/TSI0_CH10/SPI1_SIN/UART0_TX/I2S1_TXD1/FB_AD16/EWM_OUT
PTB18/TSI0_CH11/CAN0_TX/FTM2_CH0/FB_AD15/FTM2_QD_PHA/I2S0_TX_BCLK
PTB19/TSI0_CH12/CAN0_RX/FTM2_CH1/FB_OE/FTM2_QD_PHB/I2S0_TX_FS
PTB20/ADC2_SE4A/SPI2_PCS0/FB_AD31/NFC_DATA15/CMP0_OUT
PTB21/ADC2_SE5A/SPI2_SCK/FB_AD30/NFC_DATA14/CMP1_OUT
PTB22/SPI2_SOUT/FB_AD29/NFC_DATA13/CMP2_OUT
PTB23/SPI2_SIN/SPI0_PCS5/FB_AD28/NFC_DATA12/CMP3_OUT
R9 33
R12 33
R13 33
R15 33
R16 33
R17 33
R18 33
R19 33
[DSD]
DSD_BCLK
DSD_LDATA
DSD_RDATA
MODE1
MODE0
INT_REQ
DSD_STATUS
PCM_STATUS
*NM(R0603)
R108
0
R110
0
MODEL 0
L : USB disabled
H : USB enabled
MODEL 1
L : PC
H : IOS
U1C
MK20FN1M0_[LQFP144P/6]
PORT C
PTC0/ADC0_SE14/TSI0_CH13/SPI0_PCS4/PDB0_EXTRG/FB_AD14/NFC_DATA11/I2S0_TXD1
PTC1/ADC0_SE15/TSI0_CH14/SPI0_PCS3/UART1_RTS/FTM0_CH0/FB_AD13/NFC_DATA10/I2S0_TXD0
PTC2/ADC0_SE4B/TSI0_CH15/SPI0_PCS2/UART1_CTS/FTM0_CH1/FB_AD12/NFC_DATA9/I2S0_TX_FS/CMP1_IN0
PTC3/SPI0_PCS1/UART1_RX/FTM0_CH2/FB_CLKOUT/I2S0_TX_BCLK/CMP1_IN1
PTC4/SPI0_PCS0/UART1_TX/FTM0_CH3/FB_AD11/NFC_DATA8/I2S1_TX_BCLK/CMP1_OUT
PTC5/SPI0_SCK/LPTMR0_ALT2/FB_AD10/NFC_DATA7/CMP0_OUT/I2S1_TX_FS/I2S0_RXD0
PTC6/CMP0_IN0/SPI0_SOUT/PDB0_EXTRG/FB_AD9/NFC_DATA6/I2S0_MCLK/I2S0_RX_BCLK
PTC7/CMP0_IN1/SPI0_SIN/USB_SOF_OUT/FB_AD8/NFC_DATA5/I2S0_RX_FS
PTC8/ADC1_SE4B/CMP0_IN2/FTM3_CH4/FB_AD7/NFC_DATA4/I2S0_MCLK
PTC9/ADC1_SE5B/CMP0_IN3/FTM3_CH5/FB_AD6/NFC_DATA3/FTM2_FLT0/I2S0_RX_BCLK
PTC10/ADC1_SE6B/I2C1_SCL/FTM3_CH6/FB_AD5/NFC_DATA2/I2S1_MCLK/I2S0_RX_FS
PTC11/ADC1_SE7B/I2C1_SDA/FTM3_CH7/FB_RW/NFC_WE/I2S0_RXD1
PTC12/UART4_RTS/FB_AD27/FTM3_FLT0
PTC13/UART4_CTS/FB_AD26
PTC14/UART4_RX/FB_AD25
PTC15/UART4_TX/FB_AD24
PTC16/CAN1_RX/UART3_RX/ENET0_1588_TMR0/FB_CS5/FB_TSIZ1/FB_BE23_16_BLS15_8/NFC_RB
PTC17/CAN1_TX/UART3_TX/ENET0_1588_TMR1/FB_CS4/FB_TSIZ0/FB_BE31_24_BLS7_0/NFC_CE0
PTC18/UART3_RTS/ENET0_1588_TMR2/FB_TBST/FB_CS2/FB_BE15_8_BLS23_16/NFC_CE1
PTC19/UART3_CTS/ENET0_1588_TMR3/FB_CS3/FB_BE7_0_BLS31_24/FB_TA
R28 33
R29 33
R30 33
R31 33
R32 33
[DSD]
DSD_MCLK
USB_STATUS
22M_24M_SEL
MUTE_REQ
READY
U1D
MK20FN1M0_[LQFP144P/6]
PORT D
PTD0/SPI0_PCS0/UART2_RTS/FTM3_CH0/FB_ALE/FB_CS1/FB_TS/I2S1_RXD1
PTD1/ADC0_SE5B/SPI0_SCK/UART2_CTS/FTM3_CH1/FB_CS0/I2S1_RXD0
PTD2/SPI0_SOUT/UART2_RX/FTM3_CH2/FB_AD4/I2S1_RX_FS
PTD3/SPI0_SIN/UART2_TX/FTM3_CH3/FB_AD3/I2S1_RX_BCLK
PTD4/SPI0_PCS1/UART0_RTS/FTM0_CH4/FB_AD2/NFC_DATA1/EWM_IN
PTD5/ADC0_SE6B/SPI0_PCS2/UART0_CTS/UART0_COL/FTM0_CH5/FB_AD1/NFC_DATA0/EWM_OUT
PTD6/ADC0_SE7B/SPI0_PCS3/UART0_RX/FTM0_CH6/FB_AD0/FTM0_FLT0
PTD7/CMT_IRO/UART0_TX/FTM0_CH7/FTM0_FLT1
PTD8/I2C0_SCL/UART5_RX/FB_A16/NFC_CLE
PTD9/I2C0_SDA/UART5_TX/FB_A17/NFC_ALE
PTD10/UART5_RTS/FB_A18/NFC_RE
PTD11/SPI2_PCS0/UART5_CTS/SDHC0_CLKIN/FB_A19
PTD12/SPI2_SCK/FTM3_FLT0/SDHC0_D4/FB_A20
PTD13/SPI2_SOUT/SDHC0_D5/FB_A21
PTD14/SPI2_SIN/SDHC0_D6/FB_A22
PTD15/SPI2_PCS1/SDHC0_D7/FB_A23
R35 33
R36 33
R37 33
R38 33
R39 33
R40 33
[USB]
/USB_OC_DET
USB_DPDM_SEL
USB_VBUS_EN
/USB_RESET
I2C0_SCL
I2C0_SDA
R101 47K
R106 1K
R107 1K
L2
BLM18PG121SN1[0603]
+3.3V_MCU
C20 0.1u
C21 0.1u
C22 0.1u
C23 0.1u
C24 10u[0805]
C25 0.1u
C26 0.1u
C27 0.1u
C28 0.1u
C29 0.1u
U1F
MK20FN1M0_[LQFP144P/6]
ADC0_SE16/ADC0_SE21/CMP1_IN2
ADC1_SE16/ADC0_SE22/CMP2_IN2
DAC0_OUT/ADC0_SE23/CMP1_IN3
DAC1_OUT/ADC1_SE23/CMP2_IN3
PGA0_DP/ADC0_DP0/ADC1_DP3
PGA0_DM/ADC0_DM0/ADC1_DM3
PGA1_DP/ADC1_DP0/ADC0_DP3
PGA1_DM/ADC1_DM0/ADC0_DM3
PGA2_DP/ADC2_DP0/ADC3_DP3/ADC0_DP1
PGA2_DM/ADC2_DM0/ADC3_DM3/ADC0_DM1
PGA3_DP/ADC3_DP0/ADC2_DP3/ADC1_DP1
PGA3_DM/ADC3_DM0/ADC2_DM3/ADC1_DM1
VREF_OUT/CMP0_IN5/ADC1_SE18/CMP1_IN5
VDD1
VDD2
VDD3
VDD4
VDD5
VDD6
VDD7
VDD8
VDD9
VDDA
VREFH
VREFL
VBAT
VREGIN
VOUT33
VSS1
VSS2
VSS3
VSS4
VSS5
VSS6
VSS7
VSS8
VSS9
VSSA
VSSUSB
L3
BLM18PG121SN1[0603]
L4
BLM18PG121SN1[0603]
L6
BLM18PG121SN1[0603]
L7
BLM18PG121SN1[0603]
C30 0.01u
C31 0.1u
C32 0.01u
C33 0.1u
C34 0.1u
C35 0.1u
C39 0.1u
VREFL
VSSA
R105
*NM(47K)
USB_EN
R134
*NM(4.7K)
C36
0.1u
USB0_DP
USB0_DM
RESET
EXTAL32
XTAL32

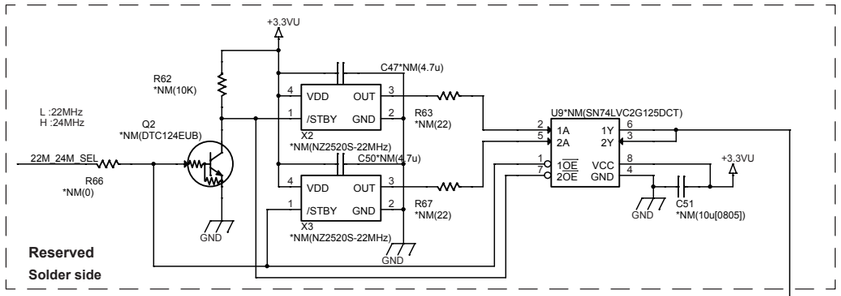
+3.3VU
R62
*NM(10K)
C47*NM(4.7u)
L :22MHz
H :24MHz
Q2
*NM(DTC124EUB)
VDD
OUT
/STBY
GND
R63
*NM(22)
X2
*NM(NZ2520S-22MHz)
22M_24M_SEL
R66
*NM(0)
C50*NM(4.7u)
R67
*NM(22)
X3
*NM(NZ2520S-22MHz)
U9*NM(SN74LVC2G125DCT)
1A
2A
1Y
2Y
1OE
2OE
VCC
C51
*NM(10u[0805])
Reserved
Solder side

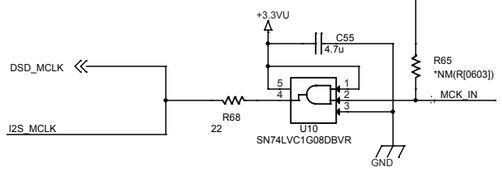
DSD_MCLK
I2S_MCLK
R68
22
C55
4.7u
R65
*NM(R[0603])
MCK_IN
U10
SN74LVC1G08DBVR

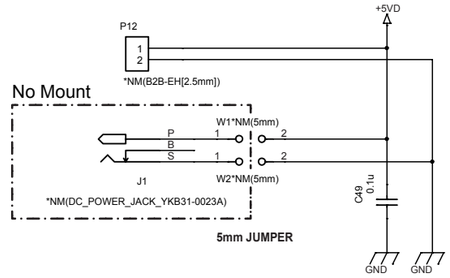
P12
*NM(B2B-EH[2.5mm])
No Mount
W1*NM(5mm)
W2*NM(5mm)
J1
*NM(DC_POWER_JACK_YKB31-0023A)
5mm JUMPER
C49
0.1u

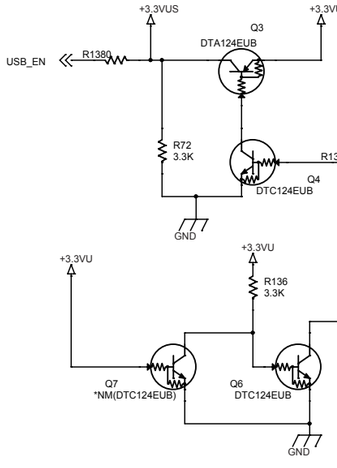
USB_EN
R1380
Q3
DTA124EUB
R72
3.3K
R1330
Q4
DTC124EUB
R136
3.3K
Q7
*NM(DTC124EUB)
Q6
DTC124EUB

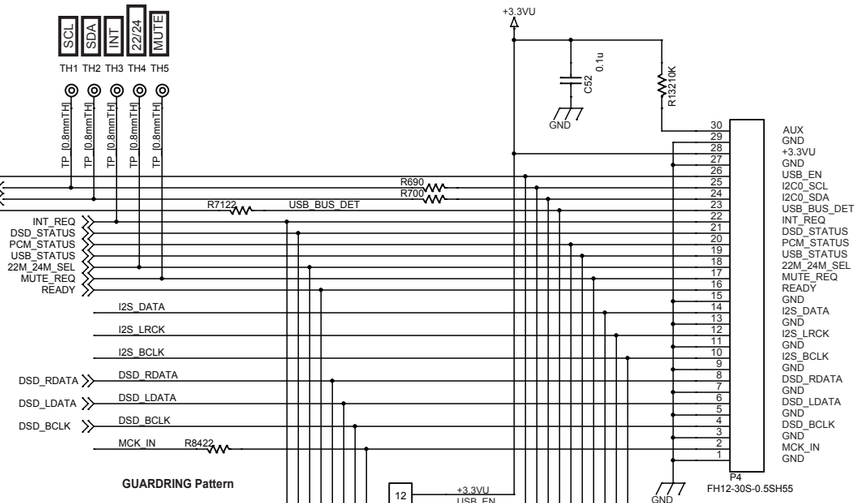
SCL
SDA
INT
22/24
MUTE
TH1 TH2 TH3 TH4 TH5
I2C0_SCL
I2C0_SDA
INT_REQ
DSD_STATUS
PCM_STATUS
USB_STATUS
22M_24M_SEL
MUTE_REQ
READY
R690
R700
R7122
USB_BUS_DET
I2S_DATA
I2S_LRCK
I2S_BCLK
DSD_RDATA
DSD_LDATA
DSD_BCLK
MCK_IN
R8422
[PCM]
[DSD]
GUARDRING Pattern
C52
0.1u
R13210K
P4
FH12-30S-0.5SH55
30pin P=0.5mm FFC
P13
*NM(B10B-ZR_1.5mm)
P14
*NM(B12B-ZR_1.5mm)

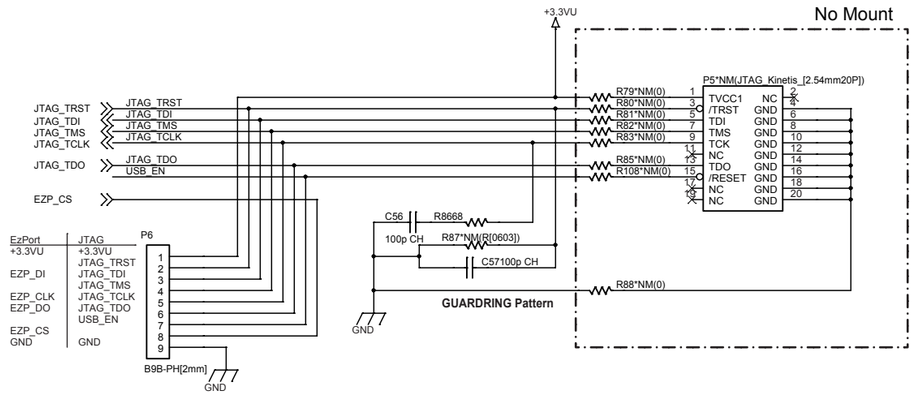
No Mount
JTAG_TRST
JTAG_TDI
JTAG_TMS
JTAG_TCLK
JTAG_TDO
USB_EN
EZP_CS
P5*NM(JTAG_Kinetis_[2.54mm20P])
R79*NM(0)
R80*NM(0)
R81*NM(0)
R82*NM(0)
R83*NM(0)
R85*NM(0)
R108*NM(0)
TVCC1
/TRST
TDI
TMS
TCK
NC
TDO
/RESET
C56
R8668
100p CH
R87*NM(R[0603])
C57100p CH
R88*NM(0)
EzPort
EZP_DI
EZP_CLK
EZP_DO
EZP_CS
P6
B9B-PH[2mm]
GUARDRING Pattern

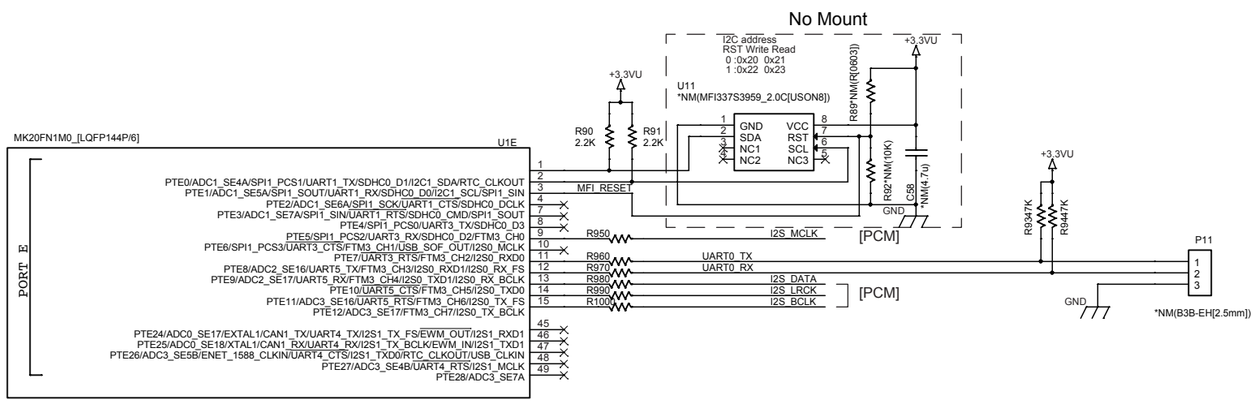
No Mount
I2C address
RST Write Read
0 :0x20 0x21
1 :0x22 0x23
U11
*NM(MFI337S3959_2.0C[USON8])
R89*NM(R[0603])
R90
2.2K
R91
2.2K
R92*NM(10K)
C58
*NM(4.7u)
MK20FN1M0_[LQFP144P/6]
U1E
PORT E
PTE0/ADC1_SE4A/SPI1_PCS1/UART1_TX/SDHC0_D1/I2C1_SDA/RTC_CLKOUT
PTE1/ADC1_SE5A/SPI1_SOUT/UART1_RX/SDHC0_D0/I2C1_SCL/SPI1_SIN
PTE2/ADC1_SE6A/SPI1_SCK/UART1_CTS/SDHC0_DCLK
PTE3/ADC1_SE7A/SPI1_SIN/UART1_RTS/SDHC0_CMD/SPI1_SOUT
PTE4/SPI1_PCS0/UART3_TX/SDHC0_D3
PTE5/SPI1_PCS2/UART3_RX/SDHC0_D2/FTM3_CH0
PTE6/SPI1_PCS3/UART3_CTS/FTM3_CH1/USB_SOF_OUT/I2S0_MCLK
PTE7/UART3_RTS/FTM3_CH2/I2S0_RXD0
PTE8/ADC2_SE16/UART5_TX/FTM3_CH3/I2S0_RXD1/I2S0_RX_FS
PTE9/ADC2_SE17/UART5_RX/FTM3_CH4/I2S0_TXD1/I2S0_RX_BCLK
PTE10/UART5_CTS/FTM3_CH5/I2S0_TXD0
PTE11/ADC3_SE16/UART5_RTS/FTM3_CH6/I2S0_TX_FS
PTE12/ADC3_SE17/FTM3_CH7/I2S0_TX_BCLK
PTE24/ADC0_SE17/EXTAL1/CAN1_TX/UART4_TX/I2S1_TX_FS/EWM_OUT/I2S1_RXD1
PTE25/ADC0_SE18/XTAL1/CAN1_RX/UART4_RX/I2S1_TX_BCLK/EWM_IN/I2S1_TXD1
PTE26/ADC3_SE5B/ENET_1588_CLKIN/UART4_CTS/I2S1_TXD0/RTC_CLKOUT/USB_CLKIN
PTE27/ADC3_SE4B/UART4_RTS/I2S1_MCLK
PTE28/ADC3_SE7A
MFI_RESET
I2S_MCLK
UART0_TX
UART0_RX
I2S_DATA
I2S_LRCK
I2S_BCLK
[PCM]
R93447K
R94447K
P11
*NM(B3B-EH[2.5mm])

TEAC **TECHNICAL INFORMATION**

No. **cp-1510**

TEAC AI-301DA, Countermeasure of noise DATE 15th Jun. 2015

Target model

AI-301DA

Failure contents

Hum noise like buzzing had been output without relation to volume position.

Countermeasure

12dB Gain of Pre-amplifier locating after volume IC is reduced, and FW is improved so that VR_IC can cover the shortage.
By this countermeasure, the noise level becomes very little.

1. Constant change of PCBA MAIN
   1) R68, R78: Remove
   2) R272, R278, R291, R301: 27K ohm -> 10K ohm

2. Firmware change
   Update unit firmware to Version 7.
   * Regarding detail, please refer to page 3 or after.

Working procedure

1. Constant change of PCBA MAIN
   Change constant of [E95504600A] PCBA,MAIN AI-301DA DM G.

   1) R68, R78: Remove
      R68 [R0170374] RD,1/8W 10K OHM J0805 G
      R78 [R0170374] RD,1/8W 10K OHM J0805 G

   2) R272, R278, R291, R301: 27K ohm -> 10K ohm
      (Old) [R0170474] RD,1/8W 27K OHM J0805 G
      ->
      (New) [R0170374] RD,1/8W 10K OHM J0805 G

TECHNICAL INFORMATION

No. **cp-1510**

DATE 15th Jun. 2015

TEAC AI-301DA, Countermeasure of noise

PCBA,MAIN AI-301DA DM G

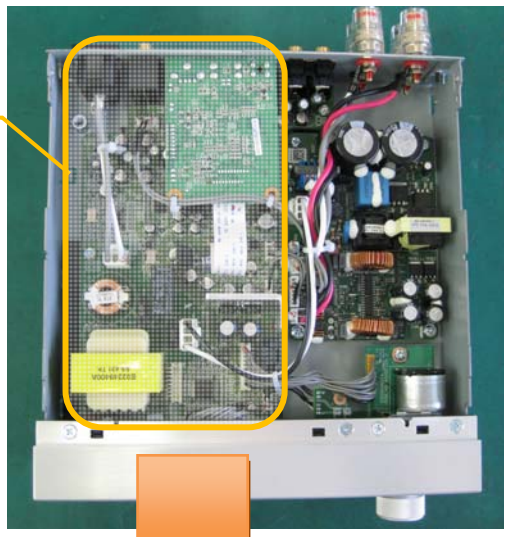

* (Reverse) Soldering side

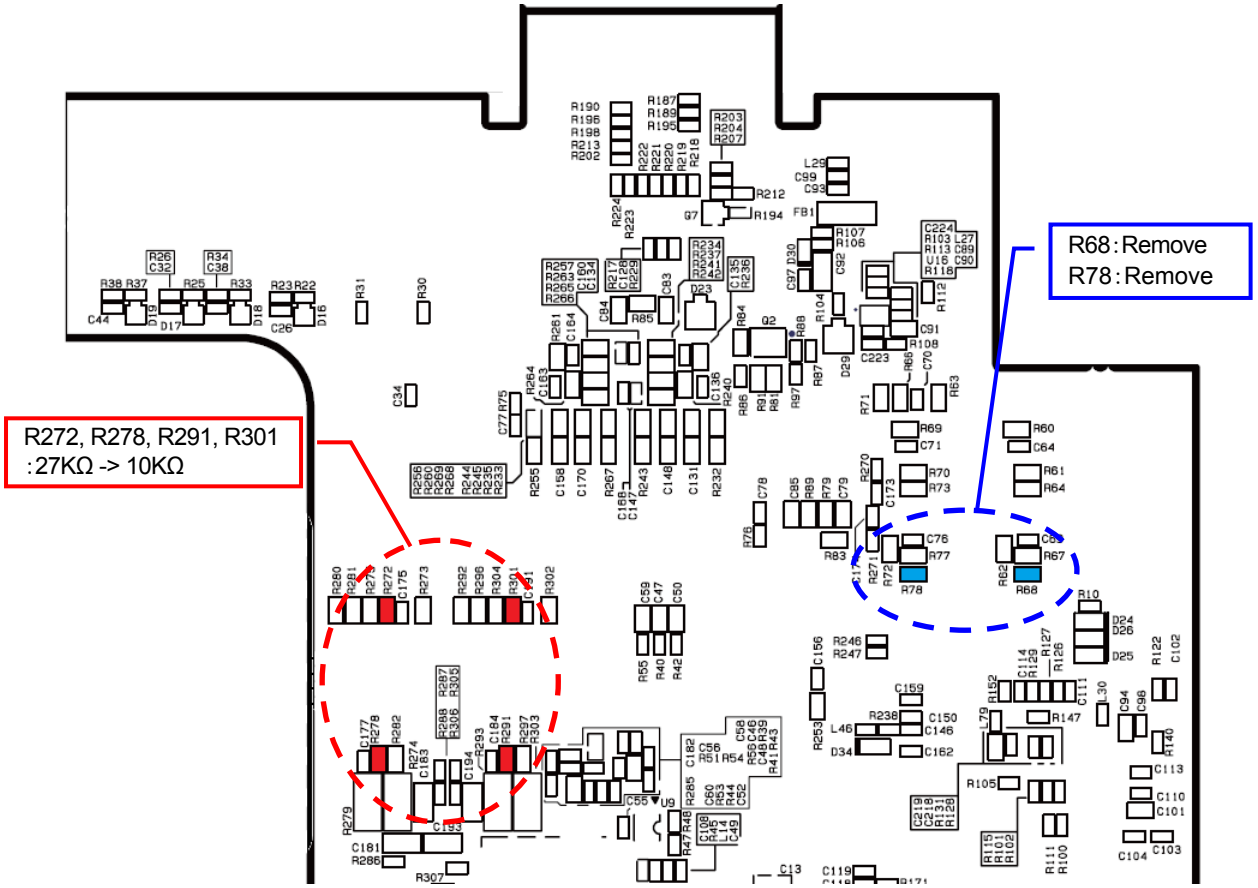

TEAC **TECHNICAL INFORMATION**

No. **cp-1510**

TEAC AI-301DA, Countermeasure of noise DATE 15th Jun. 2015

2. Firmware change

1) Check firmware version of unit.

a) After power off condition, keep pressing SOURCE button and Standby/ON button for 5 seconds.

b) After that, even if each buttons are released, unit firmware version is displayed to the input indicator.

Input indicator

LINE2 lighting: Version 1

LINE1 lighting: Version 2

LINE1 + LINE2 lighting: Version 3

OPTICAL lighting: Version 4

OPTICAL + LINE2 lighting: Version 5

OPTICAL + LINE1 lighting: Version 6

OPTICAL + LINE1 + LINE2 lighting: Version 7

For your information, each firmware version can be checked on the condition below.

USB firmware version check: On the condition that SOURCE button is ON without installing headphone jack.

Bluetooth firmware version check: On the condition that SOURCE button is OFF with installing headphone jack.

2) Update unit firmware to Version 7.

For updating firmware, ROM writer (MINICUBE2) and exchage JIG are needed.

Install conversion JIG (8 pin connector) to connector P8 on MAIN PCBA

[Needed item for writing]

- FLASH ROM Writer: MINICUBE2
- Conversion JIG（16pin - 8pin conversion cable）
- PC
- Software： Programming GUI(QB-Programmer) and parameter file(78F0527A.prm)
- Writing data (Program file) : **AI-301DA_V7.hex**

TEAC **TECHNICAL INFORMATION**

No. **cp-1510**

TEAC AI-301DA, Countermeasure of noise

DATE 15th Jun. 2015

How to setup NEC MINICUBE2

1. Unzip NEC.zip

Note) The following captures were taken under Japanese OS environment. Although I'm sorry for your inconvenience, thank you for your understanding.

2. There is qbp_v222_j.exe file in unzipped folder.
Start installation to PC with double clicking. (Wait for while)

Selection menu for INSTALL FILE appears. Enter check mark and click INSTALL button.

1) Select all 2) Click INSTALL button

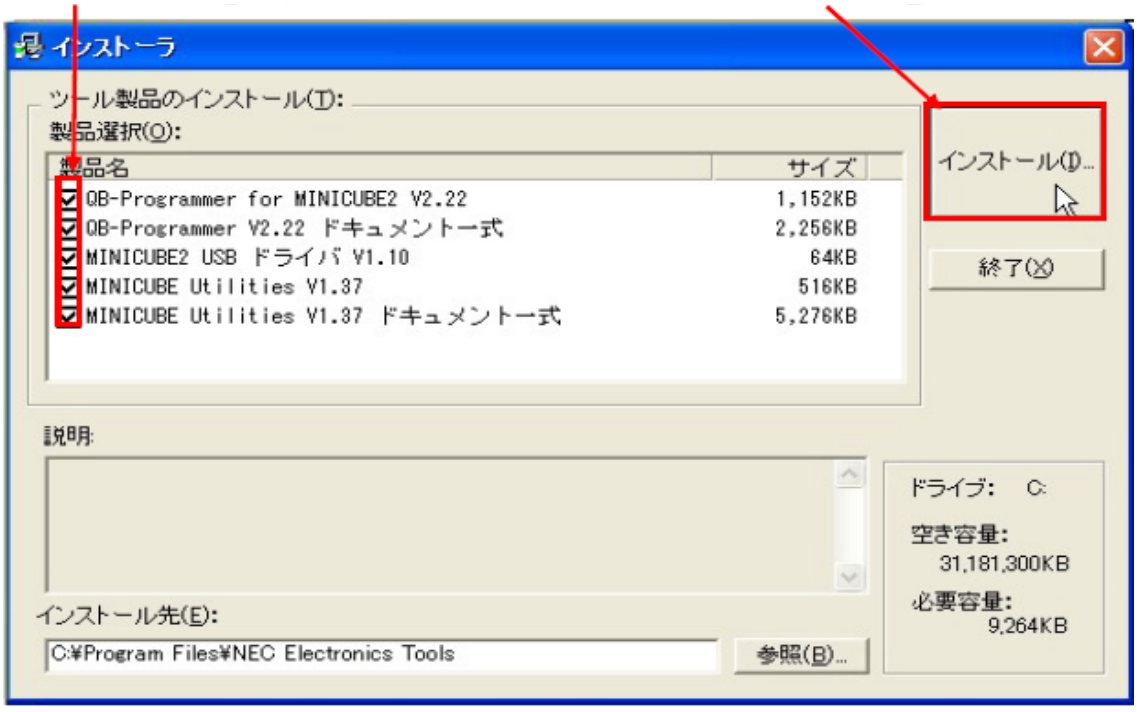

3. Popup whether installation is started appears. Click OK.

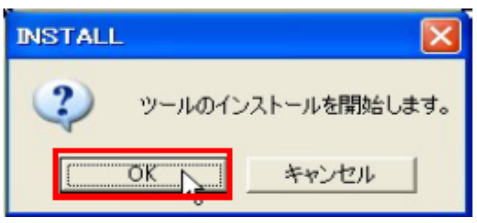

TEAC **TECHNICAL INFORMATION**

No. **cp-1510**

TEAC AI-301DA, Countermeasure of noise DATE 15th Jun. 2015

4. Start installation with displaying INSTALL Wizard.

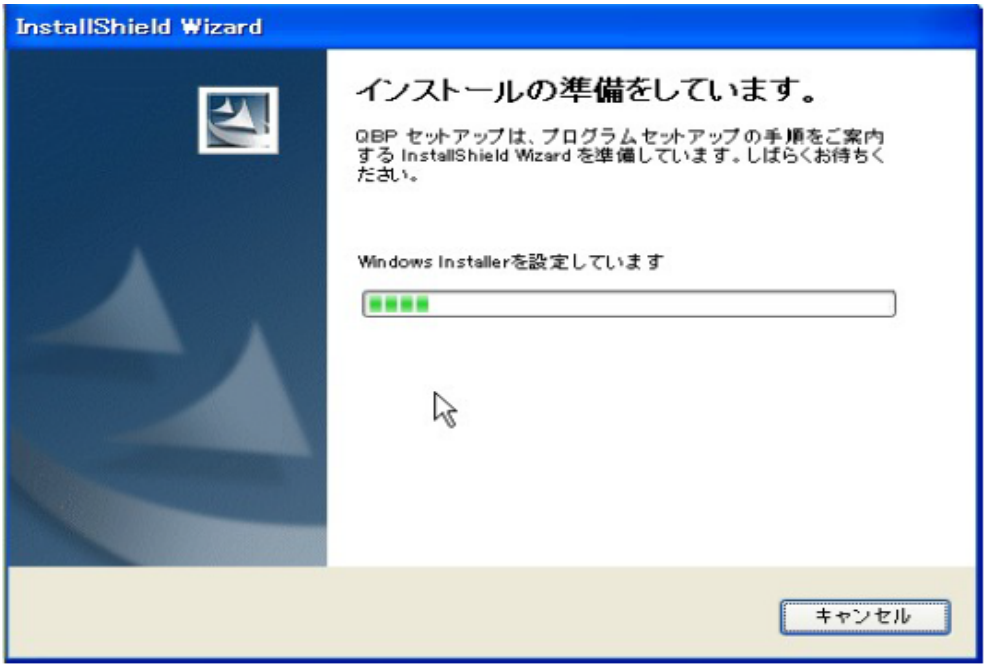

5. Popup of license agreement appears, so click Yes.

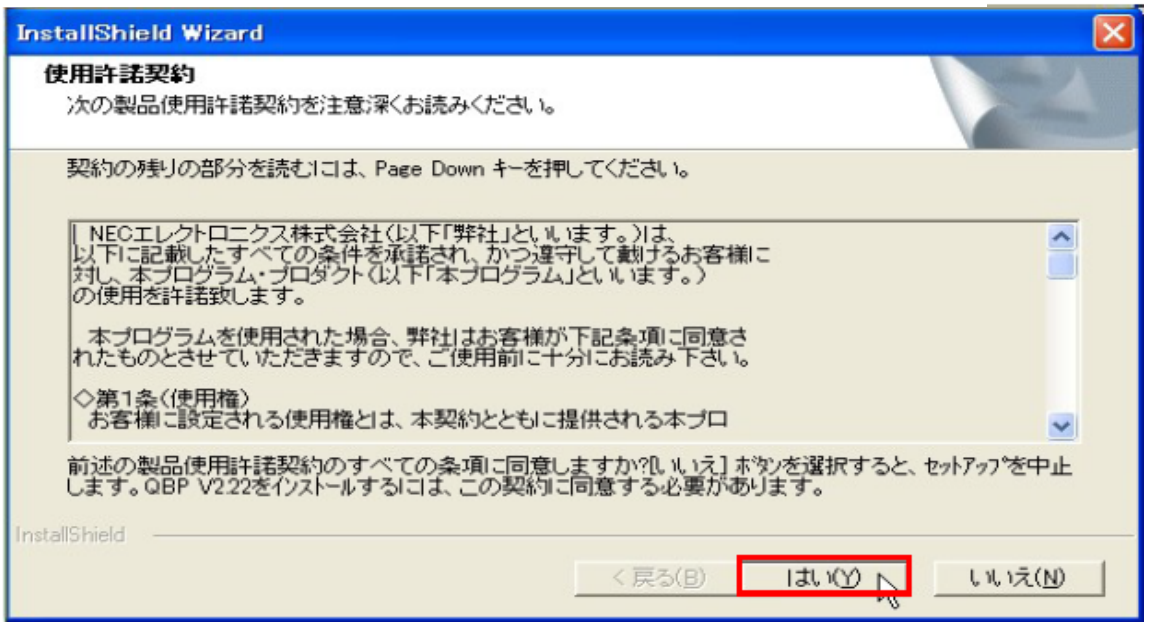

TECHNICAL INFORMATION

No. **cp-1510**

TEAC AI-301DA, Countermeasure of noise DATE 15th Jun. 2015

6. Setup Status is displayed. Please follow the instruction.

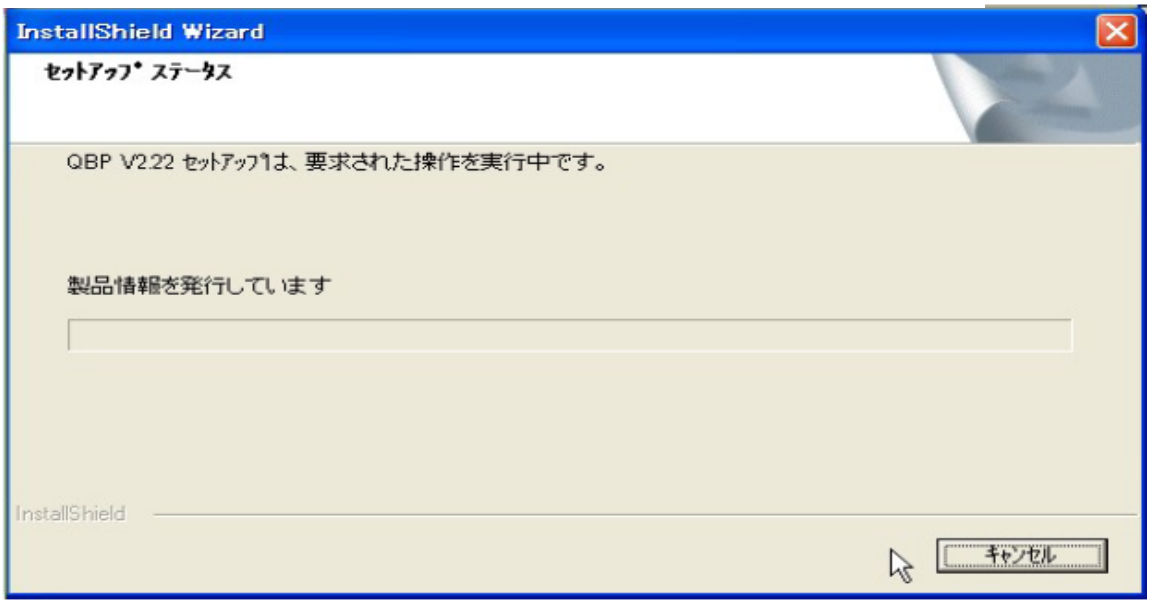

7. Installation complete is displayed. Click OK.

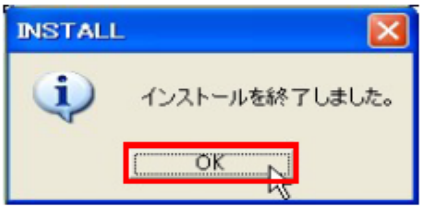

8. INSTALL MENU is displayed, so click finish.

TEAC **TECHNICAL INFORMATION**

No. **cp-1510**

TEAC AI-301DA, Countermeasure of noise DATE 15th Jun. 2015

Configuration of MINICUBE2

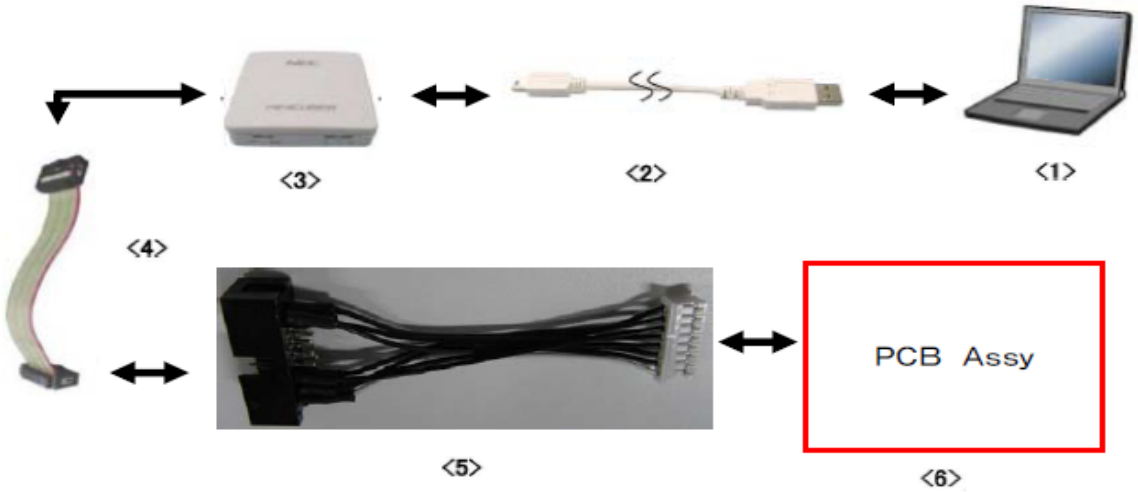

<1> PC having USB (PC which QB-programmer is installed.)
<2> USB cable (Accessory)
<3> MINICUBE2 (Unit)
<4> 16 pin Target Cable (Accessory)
<5> Conversion JIG (Circuit should be referred to below.)
<6> PCB ASSY which CPU is mounted for writing

Conversion JUG

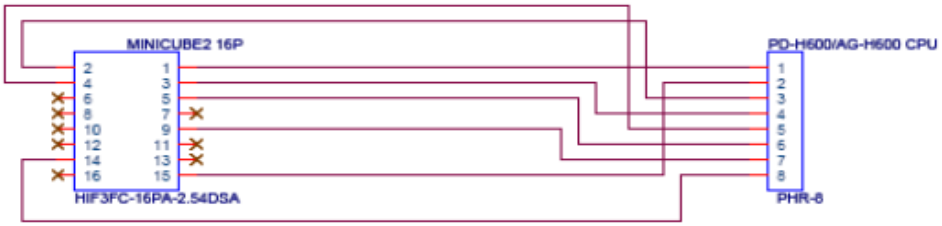

Minicube Adapter Unit: CPU Debug terminal

TEAC **TECHNICAL INFORMATION**

No. **cp-1510**

TEAC AI-301DA, Countermeasure of noise DATE 15th Jun. 2015

AI-301DA Setup for writing and how to write

1. SW setting of MINICUBE2

*** Caution: When SW of MINICUBE2 is set, remove USB cable!!**

- Set MODE Select FW to **M2**

- Set Power Select SW to **3**

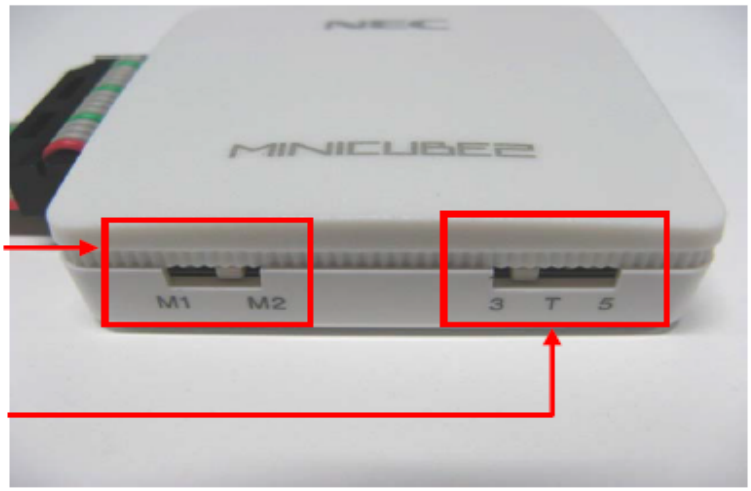

Reference	3: Supply 3V to MINICUBE2 -> PCBA
	5: Supply 5V to MINICUBE2 -> PCBA
	T: PCBA Power is used

2. Connection order

Connect each Cable on the condition that PCBA power is OFF.

1) Connect PCBA with conversion JIG.
2) Connect Conversion JIG with MINICUBE2.

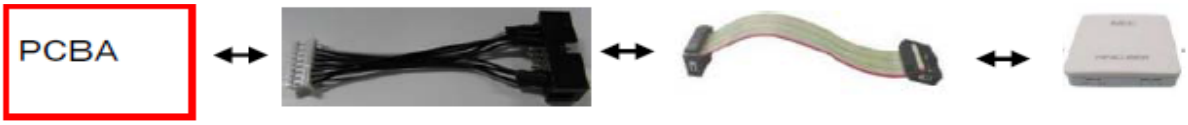

3) Connect MINICUBE2 with PC by using USB cable.

3. Run QB-programmer

Select by the following order, and run QB-programmer.
START of Windows -> All programs -> NEC Electronics Tools -> QBP -> V2.22 ->
-> QBP V2.22 QB-programmer
After running, MODE LED of MINICUBE2 lights to Green.

4. Power ON of PCBA

TEAC **TECHNICAL INFORMATION**

No. **cp-1510**

TEAC AI-301DA, Countermeasure of noise DATE 15th Jun. 2015

5. Setup for Programming
When QB-Programmer is started, this setup always should be done.

1) Execute "Device" -> "Setup" from MENU Bar.
2) POPUP of Device Setup Dialog appears. Click "Standard".
3) Click "PRM File Read", and open Parameter File Select Dialog.
Select Device Parameter for writing CUP. [**78F0527A.prm**]

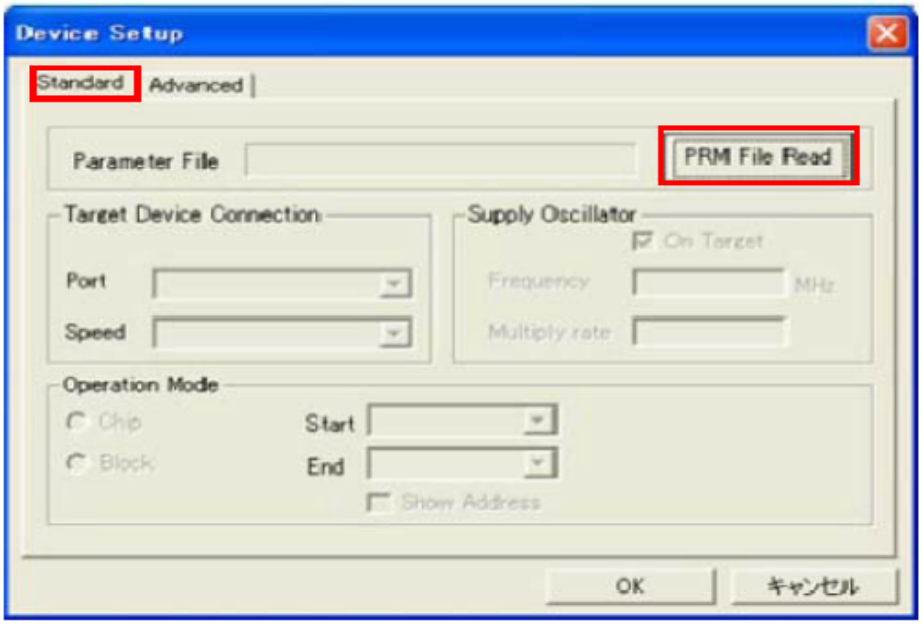

Select the location of 78F0527A.prm

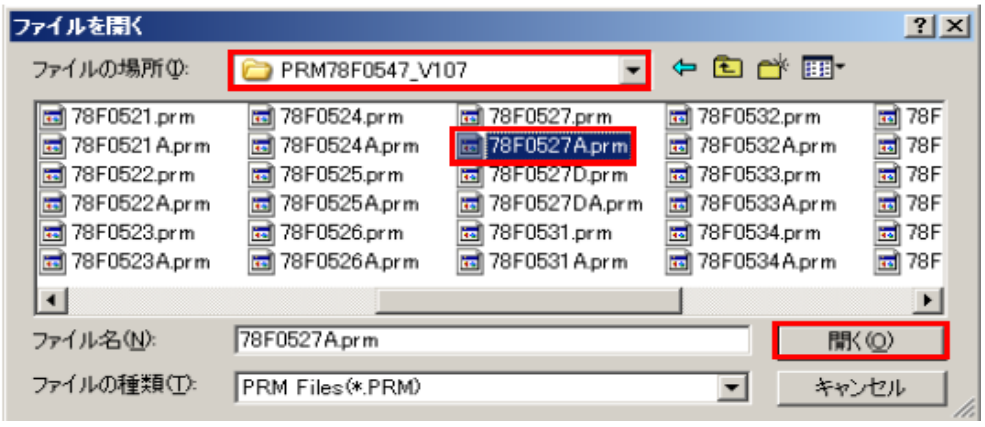

TEAC **TECHNICAL INFORMATION**

No. **cp-1510**

TEAC AI-301DA, Countermeasure of noise DATE 15th Jun. 2015

4) Setup for Target Device Connection, Supply Oscillator, Operation Mode.
Refer to the following capture.
Target Device Connection
Port : **UART-Ext-QB2CLK**
Speed : **115200bps**
Supply Oscillator
Frequency : **8MHz**
Multiply rate : 1.00

Operation Mode Check to Chip

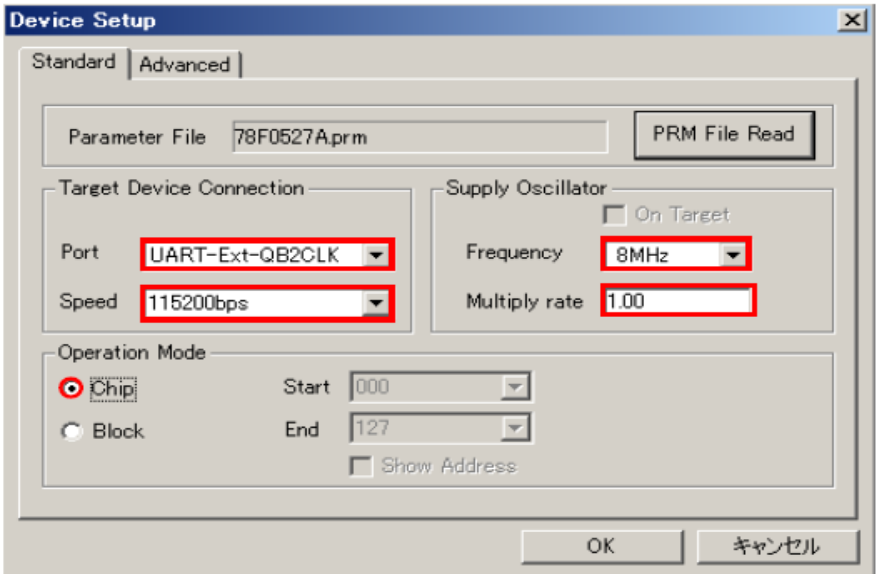

5) Setup for Command Options and Security Settings
Click "Advanced" (Refer to the following capture.)
Command Options
Check to Blank Check Before Erase and Read verify after Program
Security Settings
Boot Block end : Set 003

6) Click "Ok". Programming setup is completed, and return to Main display.

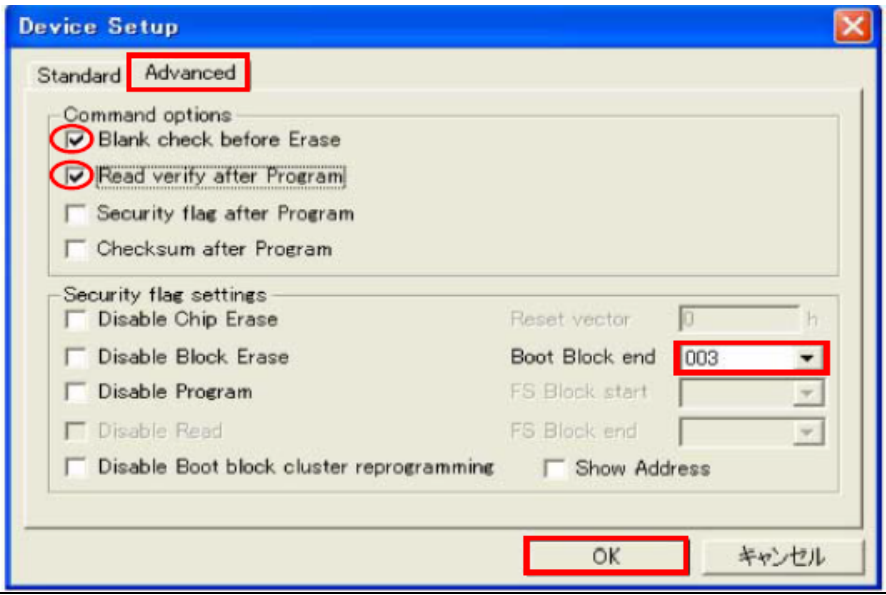

TEAC **TECHNICAL INFORMATION**

No. **cp-1510**

TEAC AI-301DA, Countermeasure of noise DATE 15th Jun. 2015

The following capture is MAIN display

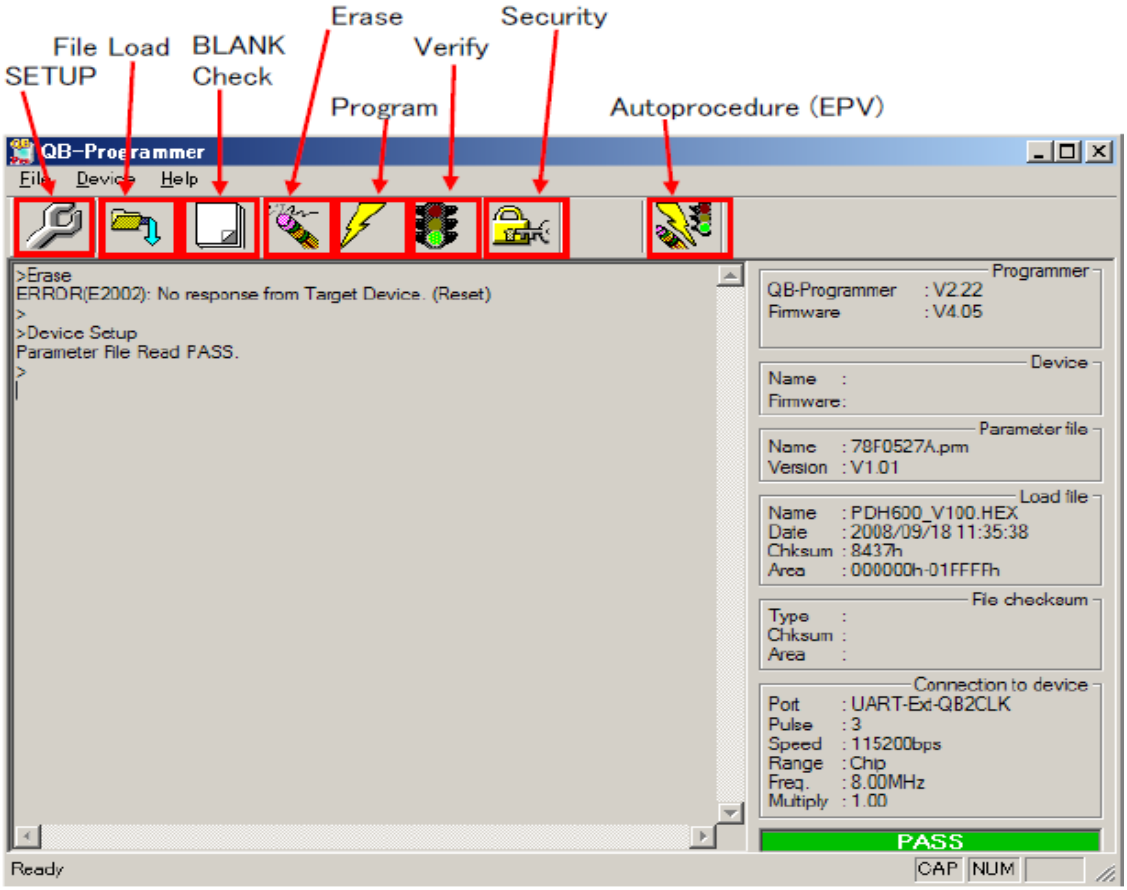

6. Selection of Program File

1) Execute "File" -> "Load" from MENU Bar.
2) POPUP of Program File selection appears.
3) Select writing file, and click "Open".
   * Regarding writing data, the latest firmware release should be used.

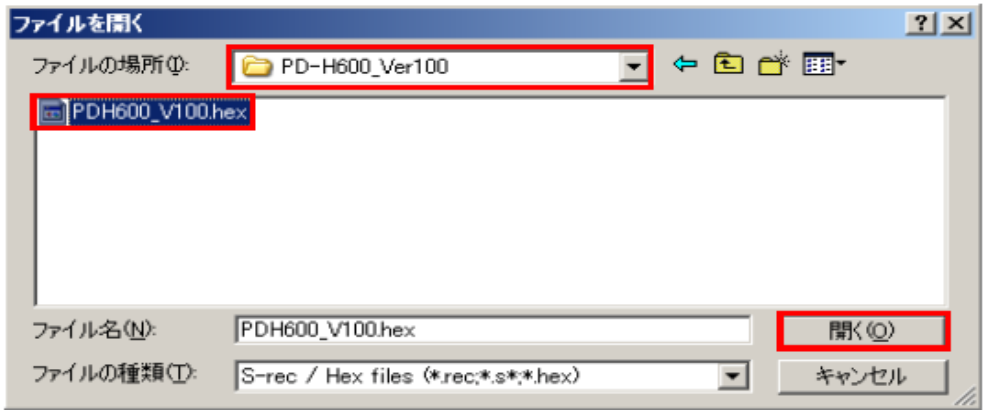

TEAC **TECHNICAL INFORMATION**

No. **cp-1510**

TEAC AI-301DA, Countermeasure of noise DATE 15th Jun. 2015

4) If the file reading is finished normally, "Success read HEX file." is displayed and "PASS" is displayed in the lower right of MAIN display.

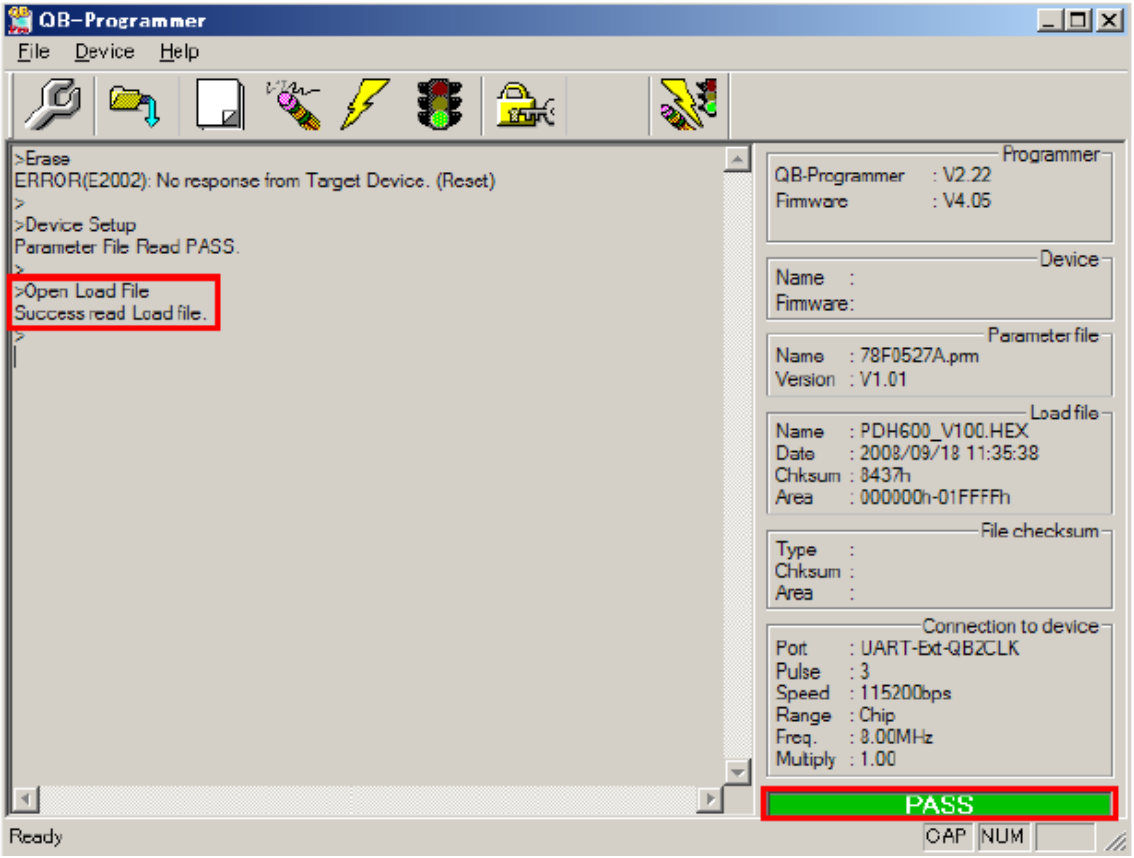

TEAC **TECHNICAL INFORMATION**

No. **cp-1510**

TEAC AI-301DA, Countermeasure of noise DATE 15th Jun. 2015

7. Working for writing
   Execute Autoprocedure (EPV).
   Execute "Device" -> " Autoprocedure".
   Note) It is executed in the following order.
   Blank Check -> Erase (If it is not Blank.) -> Program -> Verify -> Security
   During executing, MODE LED of MINICUBE2 lights to Yellow.
   If writing is finished normally, MODE LED of MINICUBE2 lights to Green, and "PASS" is displayed in the lower right of MAIN display.

- **When writing is executed, countermeasure against static electricity should be secured!!**

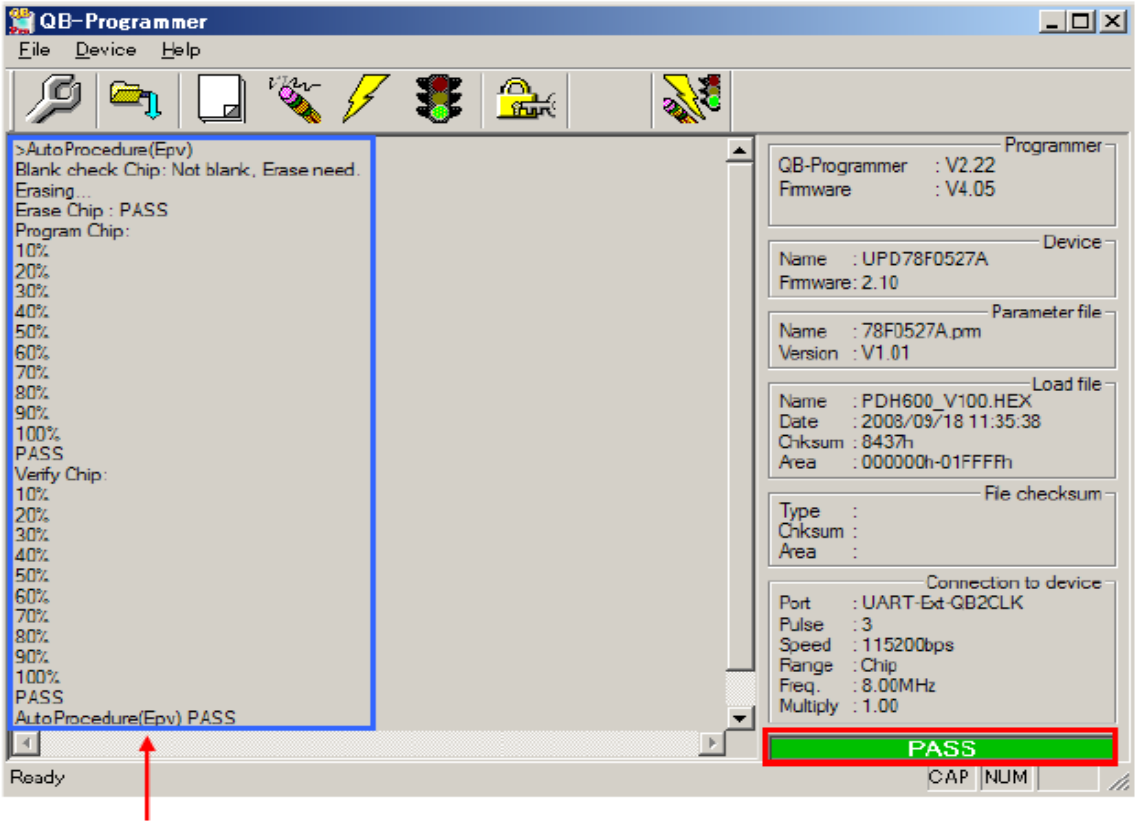

Command and Status are displayed.

8. Disconnection order of SYSTEM
   Caution: Please finish in the following order.
   If this order is mistaken, CPU and MINICUBE2 may be broken.
   1) Close QB-Programmer.
   * When QB-Programmer is closed, setting information is saved in "qbp.ini".
   If QB-Programmer is restarted, it starts with reading the setting of when it was closed.

   2) Power OFF of PCBA.

   3) Disconnect each connection cable. Disconnect in order of conversion JIG -> USB cable.

TEAC **TECHNICAL INFORMATION**

TEAC AI-301DA, Countermeasure of output hum noise (Replacement from cp-1510)

No. **cp-1510_RevB**
DATE 3rd Sep. 2015

Target model

AI-301DA

Failure contents

Hum noise like buzzing had been output without relation to volume position.
*This Tech Info must be replaced from cp-1510. Please destroy cp-1510.

Countermeasure

12dB Gain of Pre-amplifier locating after volume IC is reduced, and FW is improved so that VR_IC can cover the shortage.
By this countermeasure, the noise level becomes very little.
*Please implement H/W change of 1 and F/W change of 2 at the same time. If either change is implemented, Level becomes not to be matched.

1. Constant change of PCBA MAIN
   R68, R78, R83, R93: Remove

2. Firmware change
   Update unit firmware to Version 7.
   * Regarding detail, please refer to page 3 or after.

Note) The following level is changed by this change, so please be forewarned.
- SUB WOOFER output: +4dB
- ERP detection level is changed from -50dB to -56dB. (6dB)
- SP output and HP output are not changed.

Working procedure

1. Constant change of PCBA MAIN
   Remove the following resistances of [E95504600A] PCBA,MAIN AI-301DA DM G.

   - R68, R78, R83, R93: Remove
     R68 [R0170374] RD,1/8W 10K OHM J0805 G
     R78 [R0170374] RD,1/8W 10K OHM J0805 G
     R83 [R0170454] RD,1/8W 22K OHM J0805 G
     R93 [R0170454] RD,1/8W 22K OHM J0805 G

TECHNICAL INFORMATION

TEAC AI-301DA, Countermeasure of output hum noise (Replacement from cp-1510)

No. **cp-1510_RevB**

DATE 3rd Sep. 2015

PCBA,MAIN AI-301DA DM G

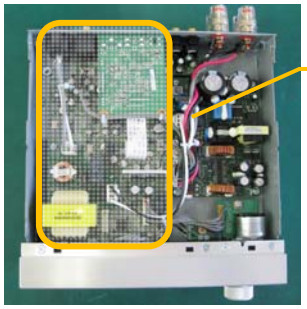

MAIN PCBA

* (Surface) Parts side

R93: Remove

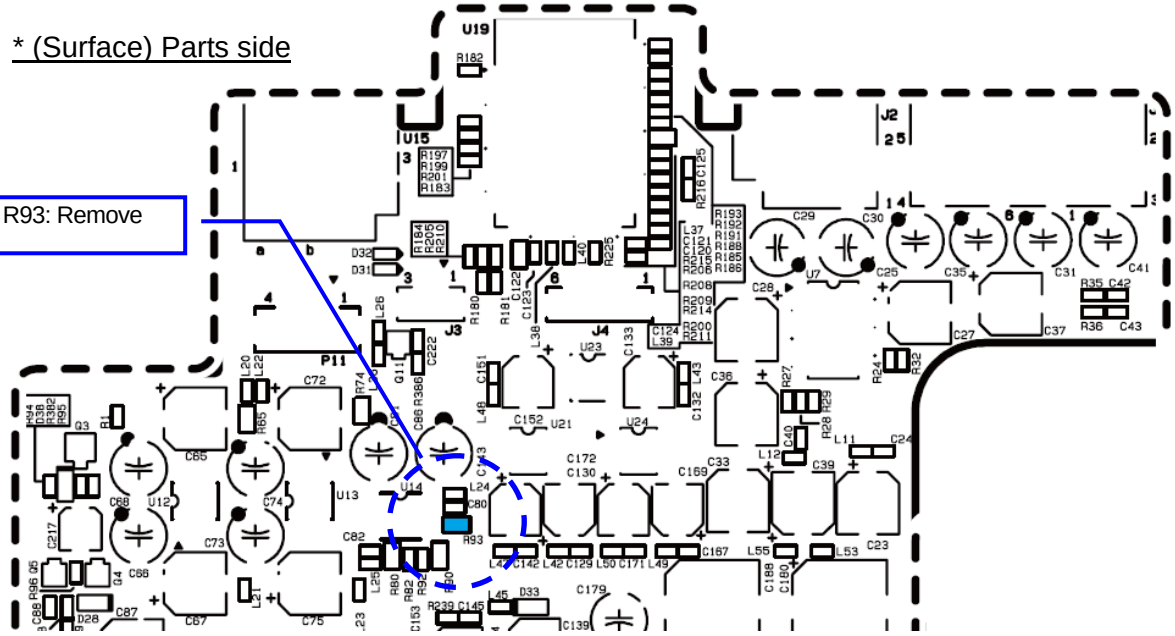

* (Reverse) Soldering side

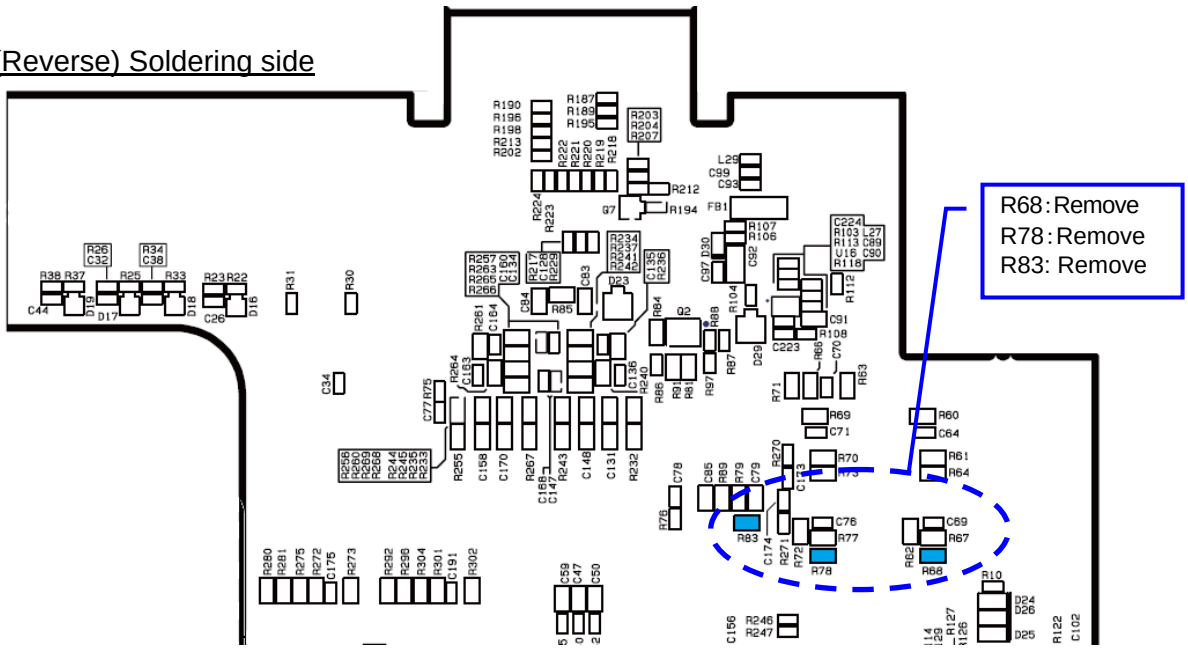

R68 : Remove
R78 : Remove
R83: Remove

TEAC **TECHNICAL INFORMATION**

TEAC AI-301DA, Countermeasure of output hum noise (Replacement from cp-1510)

No. **cp-1510_RevB**

DATE 3rd Sep. 2015

2. Firmware change

1) Check firmware version of unit.

a) After power off condition, keep pressing SOURCE button and Standby/ON button for 5 seconds.

b) After that, even if each buttons are released, unit firmware version is displayed to the input indicator.

Input indicator

LINE2 lighting: Version 1

LINE1 lighting: Version 2

LINE1 + LINE2 lighting: Version 3

OPTICAL lighting: Version 4

OPTICAL + LINE2 lighting: Version 5

OPTICAL + LINE1 lighting: Version 6

OPTICAL + LINE1 + LINE2 lighting: Version 7

For your information, each firmware version can be checked on the condition below.

USB firmware version check: On the condition that SOURCE button is ON without installing headphone jack.

Bluetooth firmware version check: On the condition that SOURCE button is OFF with installing headphone jack.

2) Update unit firmware to Version 7.

For updating firmware, ROM writer (MINICUBE2) and exchange JIG are needed.

Install conversion JIG (8 pin connector) to connector P8 on MAIN PCBA

[Needed item for writing]

- FLASH ROM Writer: MINICUBE2
- Conversion JIG（16pin - 8pin conversion cable）
- PC
- Software： Programming GUI(QB-Programmer) and parameter file(78F0527A.prm)
- Writing data (Program file) : **AI-301DA_V7.hex**

TECHNICAL INFORMATION

TEAC AI-301DA, Countermeasure of output hum noise (Replacement from cp-1510)

No. **cp-1510_RevB**

DATE 3rd Sep. 2015

How to setup NEC MINICUBE2

1. Unzip NEC.zip

Note) The following captures were taken under Japanese OS environment. Although I'm sorry for your inconvenience, thank you for your understanding.

2. There is qbp_v222_j.exe file in unzipped folder.
Start installation to PC with double clicking. (Wait for while)

Selection menu for INSTALL FILE appears. Enter check mark and click INSTALL button.

1) Select all 2) Click INSTALL button

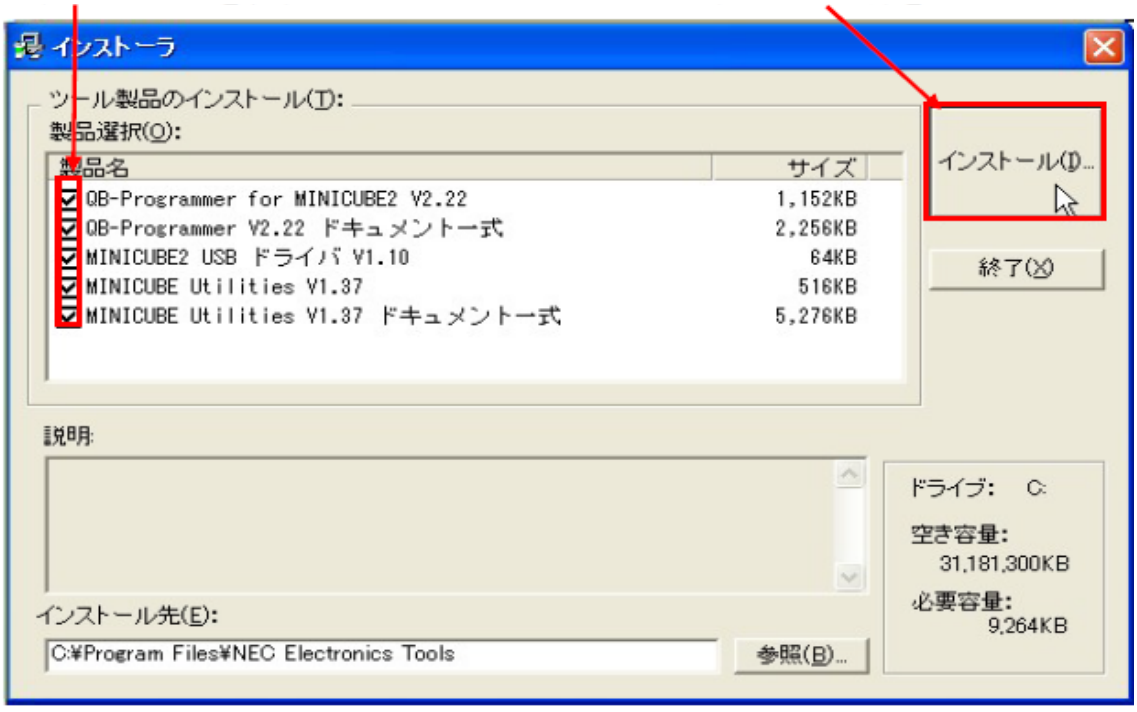

3. Popup whether installation is started appears. Click OK.

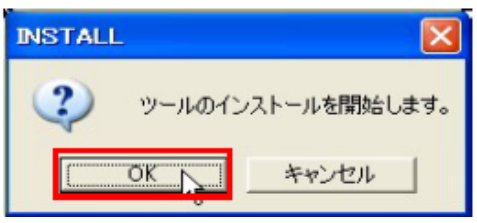

TECHNICAL INFORMATION

TEAC AI-301DA, Countermeasure of output hum noise (Replacement from cp-1510)

No. **cp-1510_RevB**

DATE 3rd Sep. 2015

4. Start installation with displaying INSTALL Wizard.

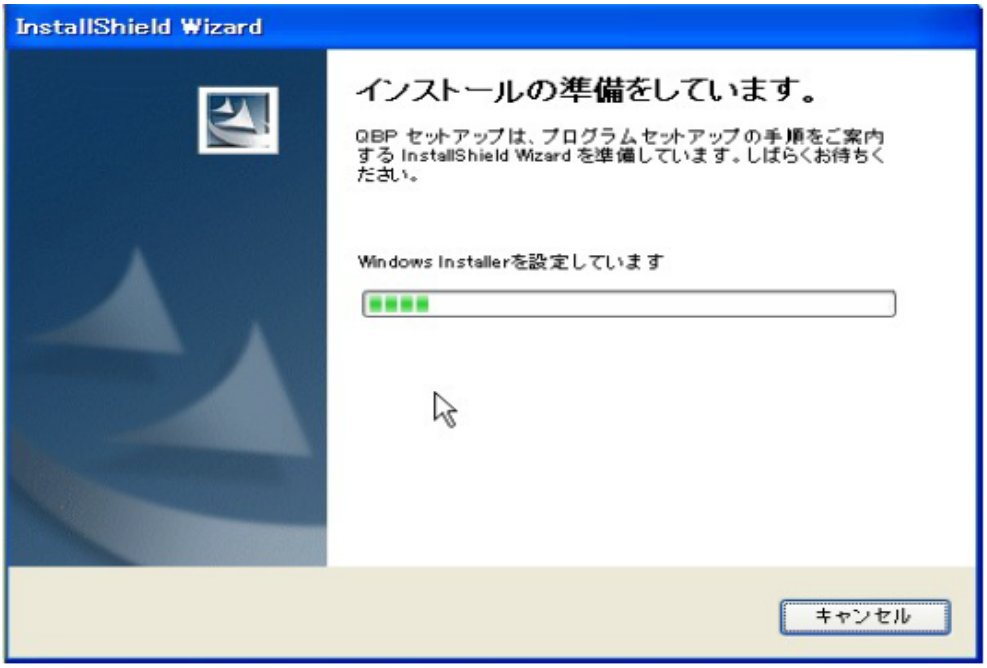

5. Popup of license agreement appears, so click Yes.

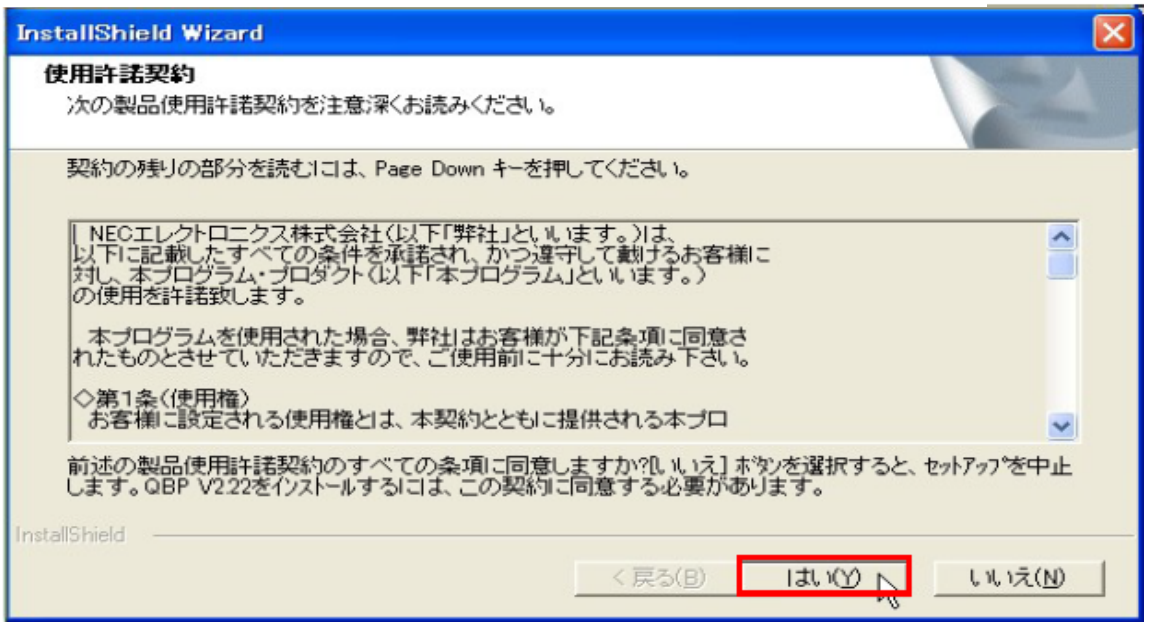

TECHNICAL INFORMATION

TEAC AI-301DA, Countermeasure of output hum noise (Replacement from cp-1510)

No. **cp-1510_RevB**

DATE 3rd Sep. 2015

6. Setup Status is displayed. Please follow the instruction.

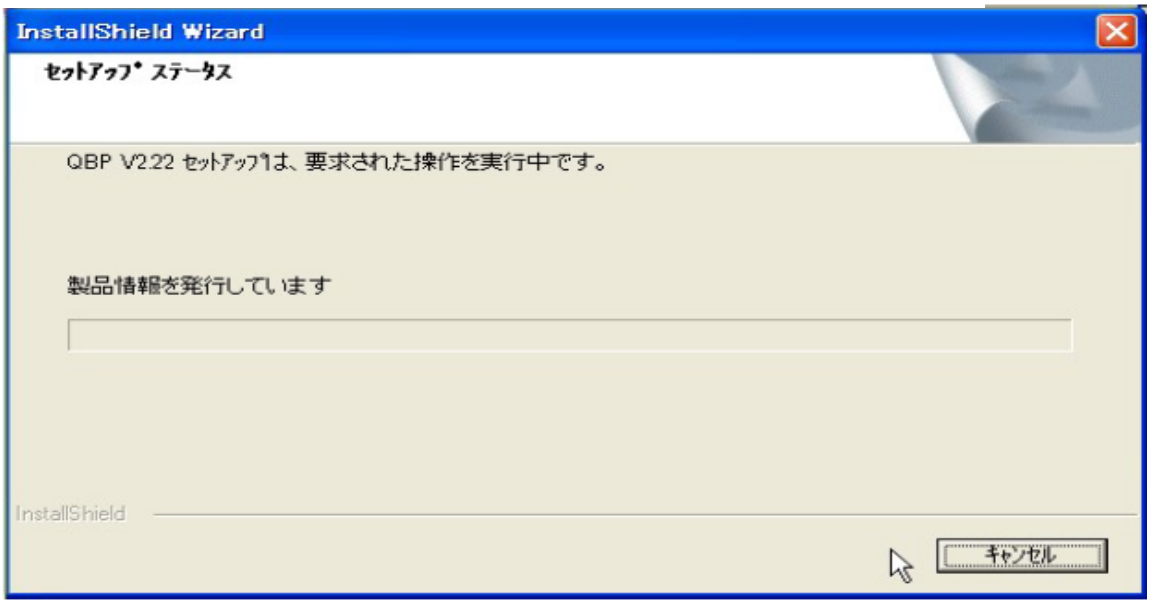

7. Installation complete is displayed. Click OK.

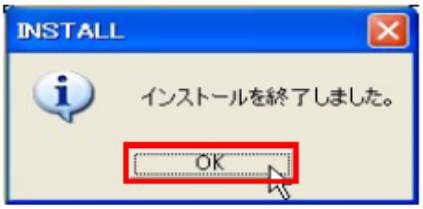

8. INSTALL MENU is displayed, so click finish.

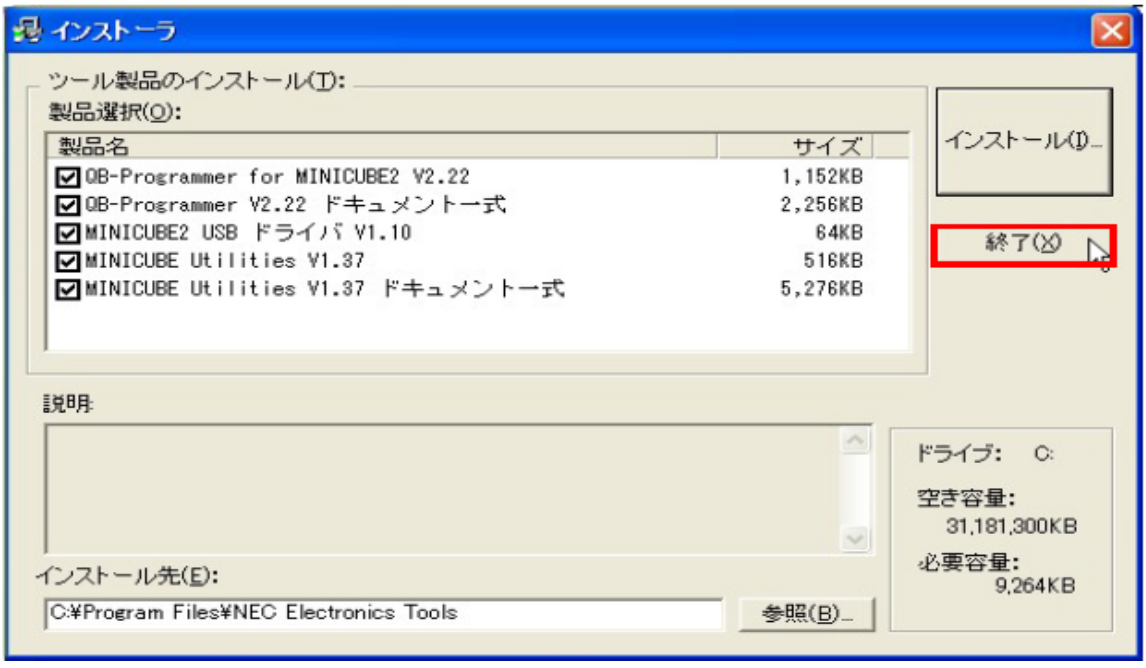

TEAC **TECHNICAL INFORMATION**

TEAC AI-301DA, Countermeasure of output hum noise (Replacement from cp-1510)

No. **cp-1510_RevB**

DATE 3rd Sep. 2015

Configuration of MINICUBE2

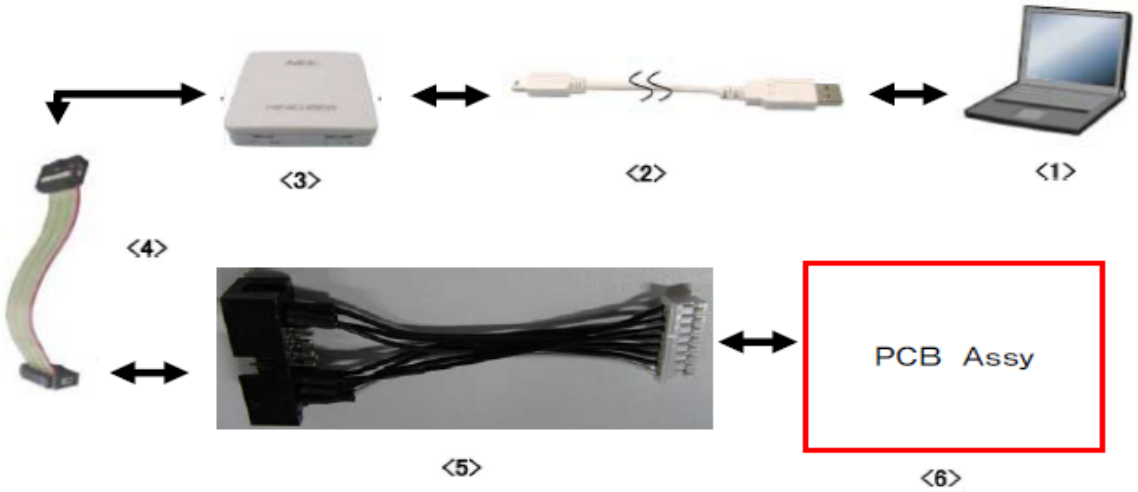

<1> PC having USB (PC which QB-programmer is installed.)
<2> USB cable (Accessory)
<3> MINICUBE2 (Unit)
<4> 16 pin Target Cable (Accessory)
<5> Conversion JIG (Circuit should be referred to below.)
<6> PCB ASSY which CPU is mounted for writing

Conversion JUG

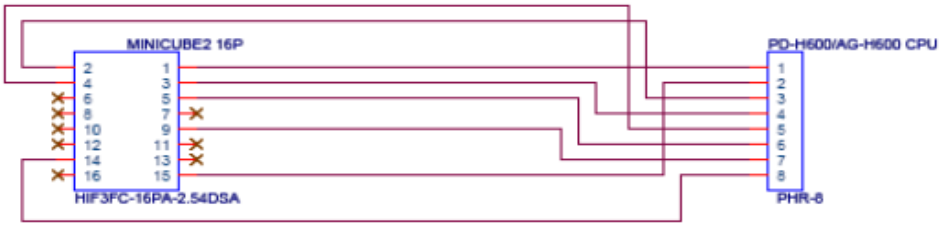

Minicube Adapter Unit: CPU Debug terminal

TEAC **TECHNICAL INFORMATION**

TEAC AI-301DA, Countermeasure of output hum noise (Replacement from cp-1510)

No. **cp-1510_RevB**

DATE 3rd Sep. 2015

AI-301DA Setup for writing and how to write

1. SW setting of MINICUBE2

*** Caution: When SW of MINICUBE2 is set, remove USB cable!!**

- Set MODE Select FW to **M2**

- Set Power Select SW to **3**

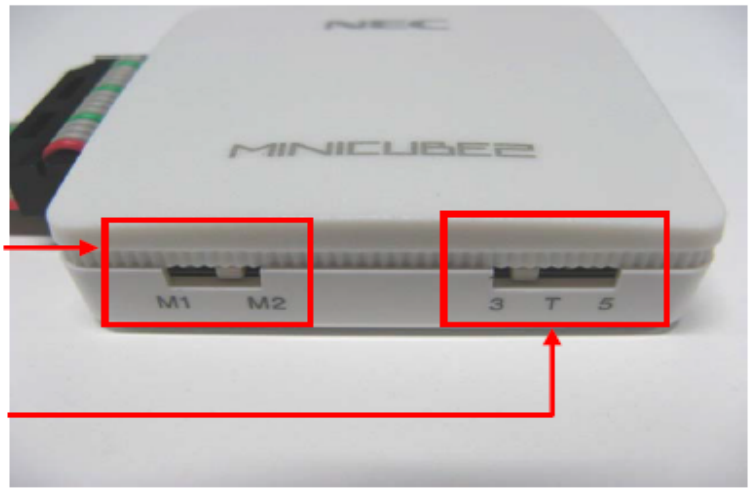

Reference	3: Supply 3V to MINICUBE2 -> PCBA
	5: Supply 5V to MINICUBE2 -> PCBA
	T: PCBA Power is used

2. Connection order

Connect each Cable on the condition that PCBA power is OFF.

1) Connect PCBA with conversion JIG.
2) Connect Conversion JIG with MINICUBE2.

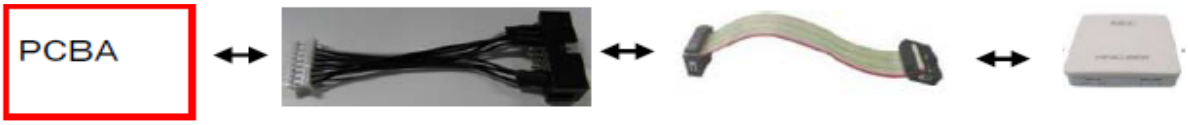

3) Connect MINICUBE2 with PC by using USB cable.

3. Run QB-programmer

Select by the following order, and run QB-programmer.
START of Windows -> All programs -> NEC Electronics Tools -> QBP -> V2.22 ->
-> QBP V2.22 QB-programmer
After running, MODE LED of MINICUBE2 lights to Green.

4. Power ON of PCBA

TEAC **TECHNICAL INFORMATION**

TEAC AI-301DA, Countermeasure of output hum noise (Replacement from cp-1510)

No. **cp-1510_RevB**

DATE 3rd Sep. 2015

5. Setup for Programming
When QB-Programmer is started, this setup always should be done.

1) Execute "Device" -> "Setup" from MENU Bar.
2) POPUP of Device Setup Dialog appears. Click "Standard".
3) Click "PRM File Read", and open Parameter File Select Dialog.
Select Device Parameter for writing CUP. [**78F0527A.prm**]

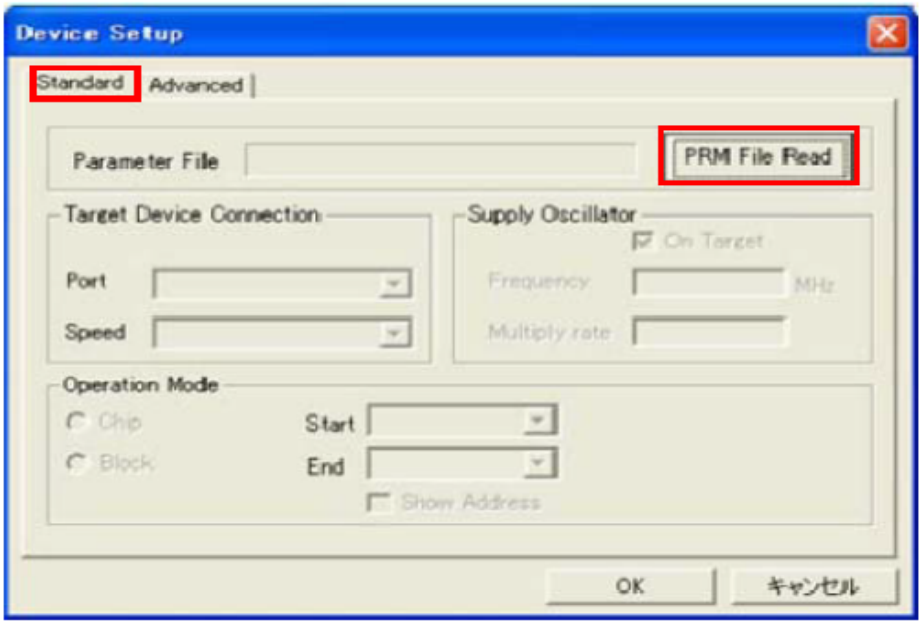

Select the location of 78F0527A.prm

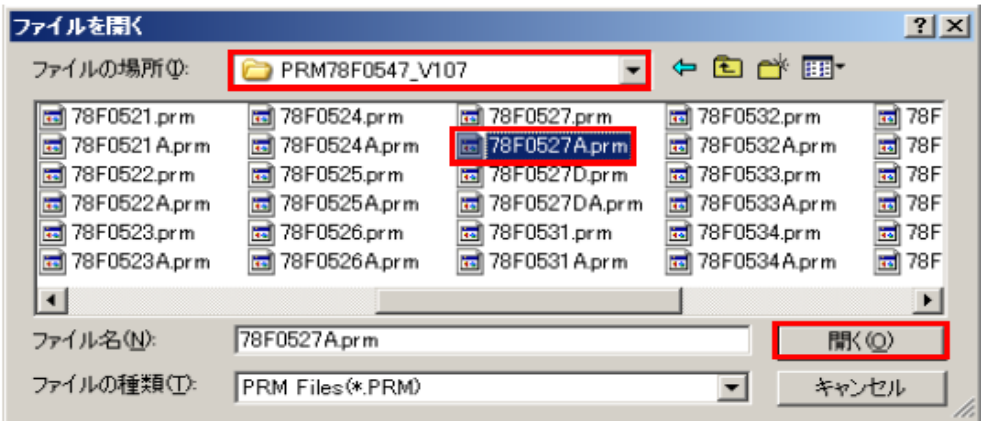

TEAC **TECHNICAL INFORMATION**

TEAC AI-301DA, Countermeasure of output hum noise (Replacement from cp-1510)

No. **cp-1510_RevB**

DATE 3rd Sep. 2015

4) Setup for Target Device Connection, Supply Oscillator, Operation Mode.
Refer to the following capture.

Target Device Connection
Port : **UART-Ext-QB2CLK**
Speed : **115200bps**

Supply Oscillator
Frequency : **8MHz**
Multiply rate : 1.00

Operation Mode Check to Chip

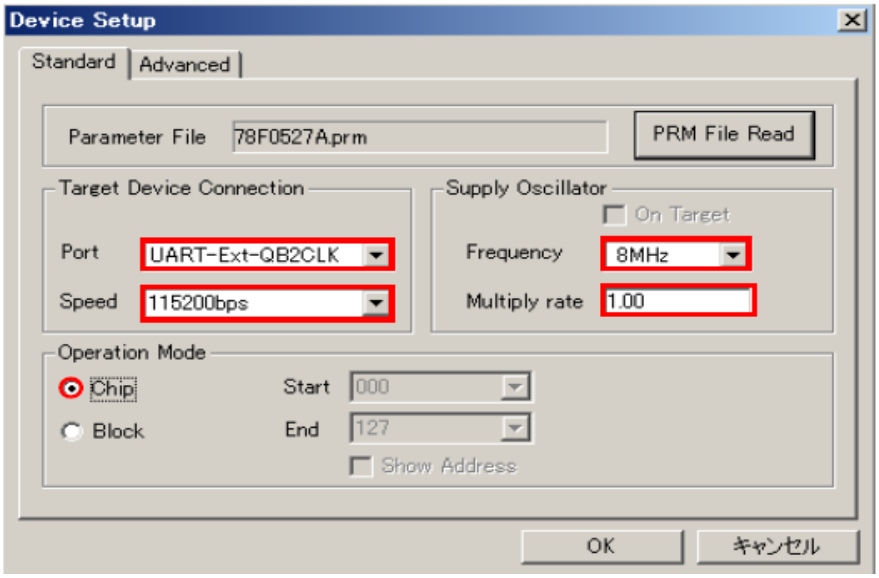

5) Setup for Command Options and Security Settings
Click "Advanced" (Refer to the following capture.)
Command Options
Check to Blank Check Before Erase and Read verify after Program
Security Settings
Boot Block end : Set 003

6) Click "Ok". Programming setup is completed, and return to Main display.

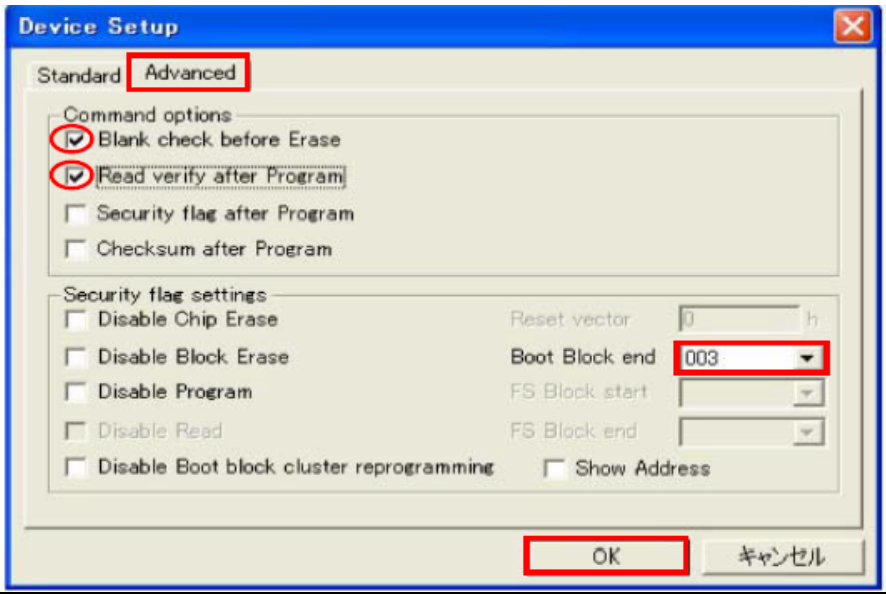

TEAC **TECHNICAL INFORMATION**

TEAC AI-301DA, Countermeasure of output hum noise (Replacement from cp-1510)

No. **cp-1510_RevB**

DATE 3rd Sep. 2015

The following capture is MAIN display

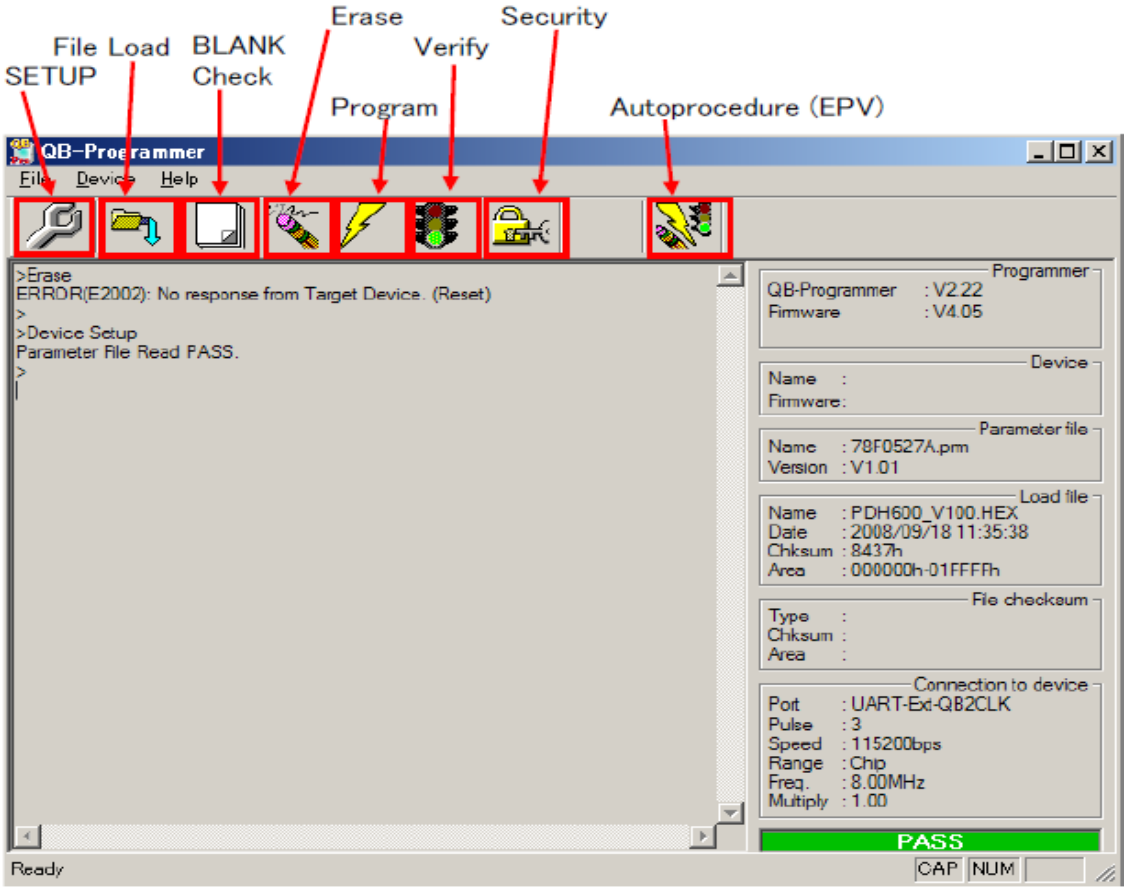

6. Selection of Program File

1) Execute "File" -> "Load" from MENU Bar.
2) POPUP of Program File selection appears.
3) Select writing file, and click "Open".
   * Regarding writing data, the latest firmware release should be used.

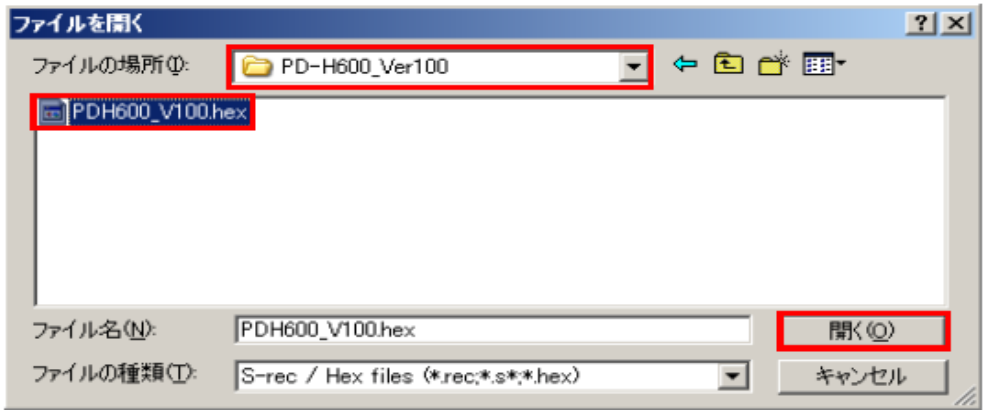

TECHNICAL INFORMATION

TEAC AI-301DA, Countermeasure of output hum noise (Replacement from cp-1510)

No. **cp-1510_RevB**

DATE 3rd Sep. 2015

4) If the file reading is finished normally, "Success read HEX file." is displayed and "PASS" is displayed in the lower right of MAIN display.

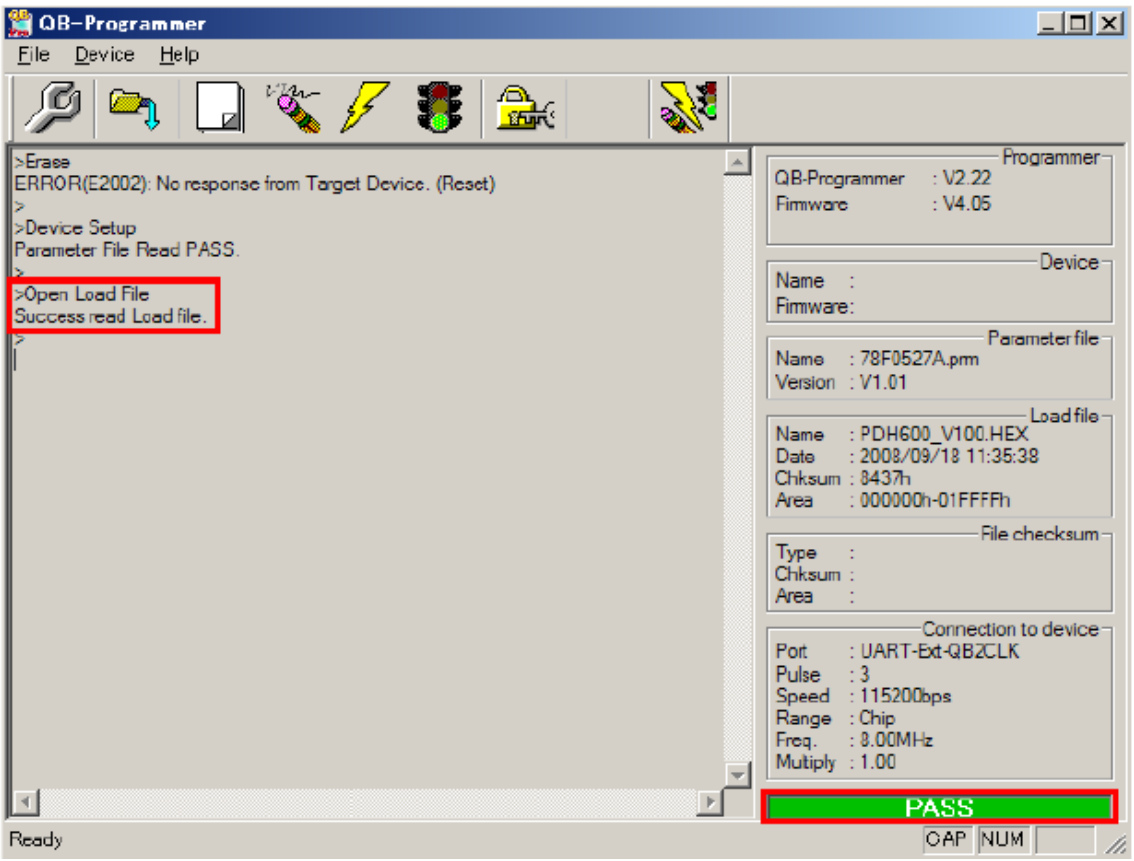

TEAC **TECHNICAL INFORMATION**

TEAC AI-301DA, Countermeasure of output hum noise (Replacement from cp-1510)

No. **cp-1510_RevB**

DATE 3rd Sep. 2015

7. Working for writing
   Execute Autoprocedure (EPV).
   Execute "Device" -> " Autoprocedure".
   Note) It is executed in the following order.
   Blank Check -> Erase (If it is not Blank.) -> Program -> Verify -> Security
   During executing, MODE LED of MINICUBE2 lights to Yellow.
   If writing is finished normally, MODE LED of MINICUBE2 lights to Green, and "PASS" is displayed in the lower right of MAIN display.

- **When writing is executed, countermeasure against static electricity should be secured!!**

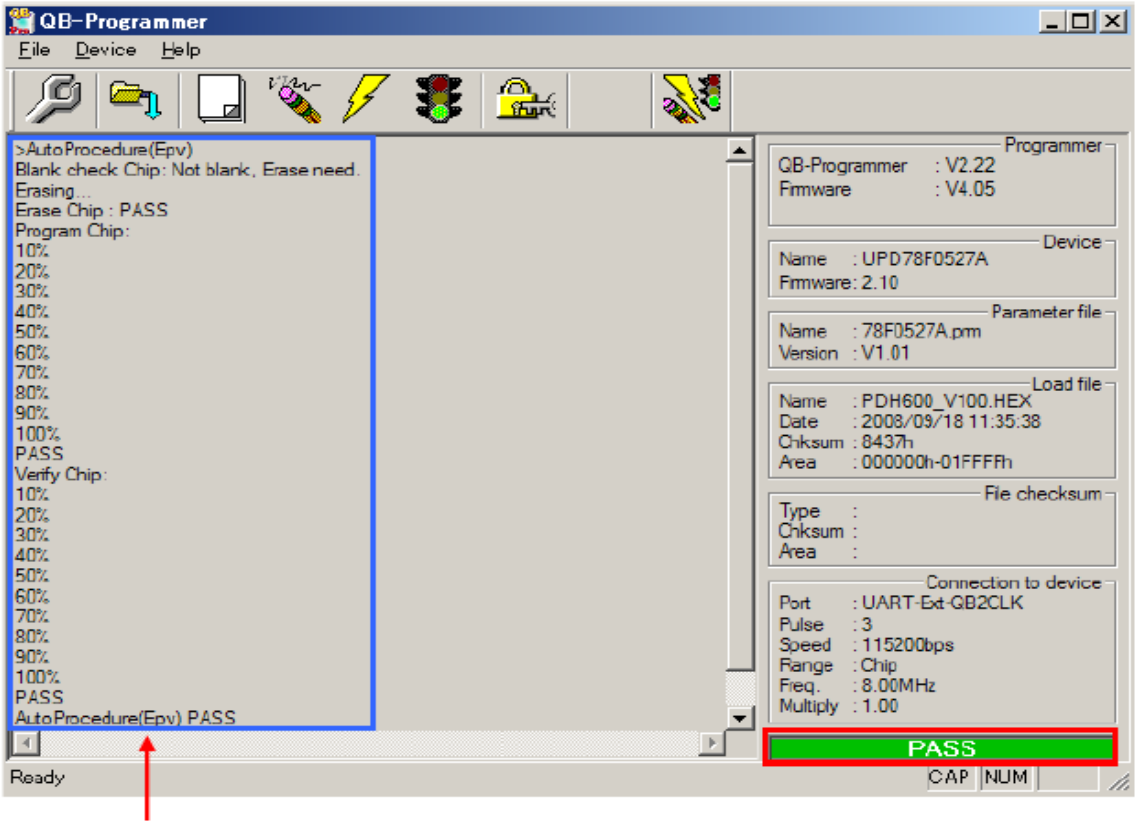

Command and Status are displayed.

8. Disconnection order of SYSTEM
   Caution: Please finish in the following order.
   If this order is mistaken, CPU and MINICUBE2 may be broken.
   1) Close QB-Programmer.
   * When QB-Programmer is closed, setting information is saved in "qbp.ini".
   If QB-Programmer is restarted, it starts with reading the setting of when it was closed.

   2) Power OFF of PCBA.

   3) Disconnect each connection cable. Disconnect in order of conversion JIG -> USB cable.

TECHNICAL INFORMATION

TEAC UD-301/AI-301DA, Countermeasure of hum noise on USB connection

No. **cp-1607**
DATE 28th May. 2016

Target model

UD-301, AI-301DA

Failure Contents

On the early lot of USB PCBA (E95505000A PCB ASSY,USB IF K20 G), there were some cases that the hum noise is added to the output, if unit is connected with PC by USB.
As this countermeasure, case terminal of USB connector is connected to signal GND for GND enhancement of USB PCB which is used on UD-301/AI-301DA.

Note: Target is the following Rev A PCB. Reworking of Rev B PCB is not needed.
- E90505000A PCB,USB IF K20 G -> **Reworking is needed.**
- E90505000B PCB,USB IF K20 G -> **Reworking is not needed.**

Countermeasure

1. Strip away the resist of 2 portion of signal GND near the case terminal of USB connector (P1).

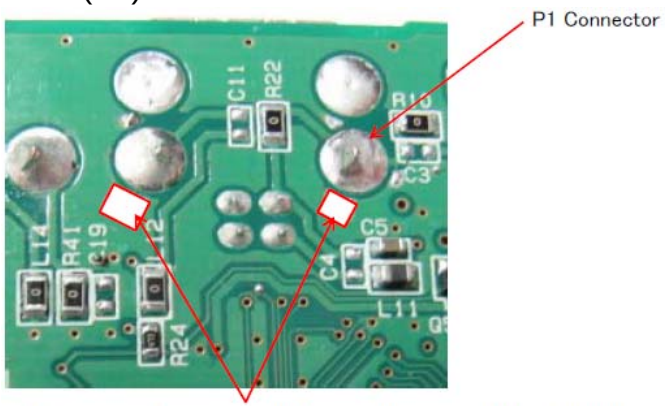

Strip away the resist of 2 portion of signal GND. (Near bracket for fixing USB Connector)

2. Connect the pattern stripping away the resist with the case terminal of USB connector (P1) by soldering.

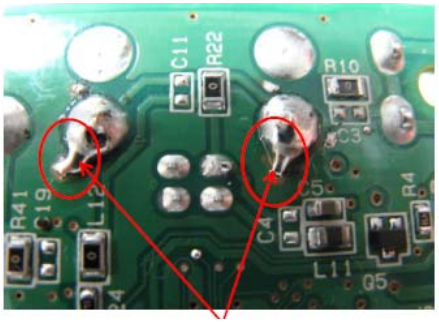

Connect the pattern stripping away the resist with the pad of bracket for fixing USB connector by soldering. (2 portions)

TECHNICAL INFORMATION

TEAC consumer equipment: 8 products,
Countermeasure of soldering failure of filter part

No. cp-**1609**
DATE 10th Jun. 2016

Target model

AI-301DA-B / AI-301DA-S / AI-301DA-SP/B / AI-301DA-SP/S /
UD-301-B /UD-301-S / UD-501-B / UD-501-S

Failure confirmed

Mounting the EMI filter parts of the design change that was implemented for the August, 2015 or later products was started.
But we found there are some cases of becoming the non-soldering by float of the other side if the changed filter shifts to one side of PCB pad, because the changed filter size is smaller than the previous filter.

Regarding this issue, effected products range is wide, so the model used, the target lot, the PCBA used, the target part location (the qty. used) and the failure symptom in case of becoming the non-soldering are summarized to the next page or the later.
Please implement the following countermeasure for the PCBA of the target model.

Countermeasure

Please implement additional soldering work for the target filter part until each PCB is revised.

- Target part E0231634 FILTER,ELKE470FA G
E0231644 FILTER,ELKE101FA G
E0231654 FILTER,ELKE102FA G

<Example>

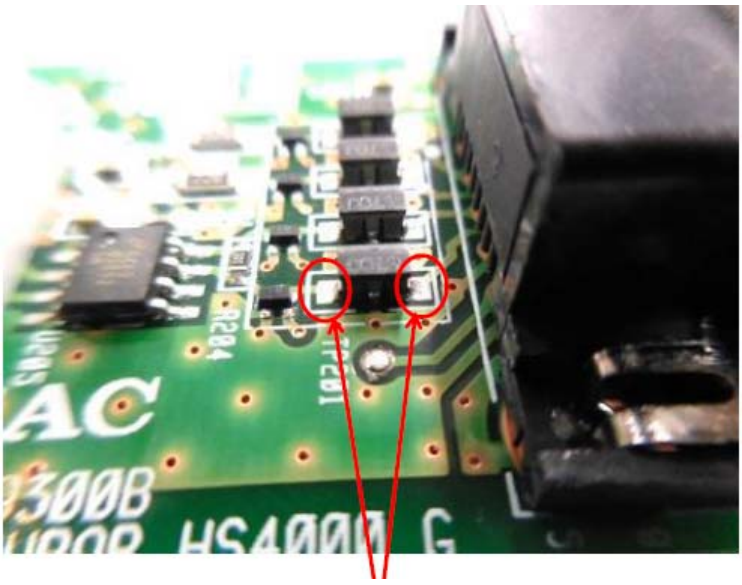

Additional soldering by hand work

TEAC **TECHNICAL INFORMATION**

TEAC consumer equipment: 8 products,
Countermeasure of soldering failure of filter part

No. cp-**1609**
DATE 10th Jun. 2016

[1] AI-301DA-B

Expected failure symptom in case of non-soldering	**COAXIAL communication is not available**
Target LOT	**(August, 2015 or later) 018LOT（S/N: 0180001-）**
Reworded LOT	**(April, 2015 or later) 164LOT（S/N: 1640001-）**
PCBA used	**E95504600A PCBA,MAIN AI-301DA DM G**
Target location number	**FB1(Target is 1point)**

[2] AI-301DA-S

Expected failure symptom in case of non-soldering	**COAXIAL communication is not available**
Target LOT	**(September, 2015 or later) 018LOT(S/N: 0180401-)**
Reworded LOT	**(March, 2016) S/N: 0210101-**
PCBA used	**E95504600A PCBA,MAIN AI-301DA DM G**
Target location number	**FB1(Target is 1point)**

[3] AI-301DA-SP/B

Expected failure symptom in case of non-soldering	**COAXIAL communication is not available**
Target LOT	**(September, 2015 or later) 019LOT(S/N: 0190101-)**
Reworded LOT	**(March, 2016) S/N: 0200248-**
PCBA used	**E95504600A PCBA,MAIN AI-301DA DM G**
Target location number	**FB1(Target is 1point)**

[4] AI-301DA-SP/S

Expected failure symptom in case of non-soldering	**COAXIAL communication is not available**
Target LOT	**(September, 2015 or later) 019LOT(S/N: 0190401-)**
Reworded LOT	**(March, 2016) S/N: 0190897-**
PCBA used	**E95504600A PCBA,MAIN AI-301DA DM G**
Target location number	**FB1(Target is 1point)**

(Pattern drawing) *Side B

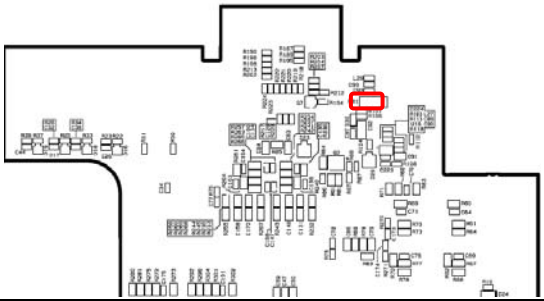

TECHNICAL INFORMATION

TEAC consumer equipment: 8 products,
Countermeasure of soldering failure of filter part

No. cp-**1609**
DATE 10th Jun. 2016

[5] UD-301-B

Expected failure symptom in case of non-soldering	**COAXIAL communication is not available**
Target LOT	**(August, 2015 or later) S/N: 0150101-**
Reworded LOT	**(March, 2016 or later) 020LOT（S/N: 0200001-）**
PCBA used	**E95505200A PCB ASSY,MAIN UD-301 G**
Target location number	**FB1(Target is 1point)**

[6] UD-301-S

Expected failure symptom in case of non-soldering	**COAXIAL communication is not available**
Target LOT	**(August, 2015 or later) S/N: 0140298-**
Reworded LOT	**(March, 2016 or later) 020LOT（S/N: 0200001-）**
PCBA used	**E95505200A PCB ASSY,MAIN UD-301 G**
Target location number	**FB1(Target is 1point)**

(Pattern drawing) *Side A

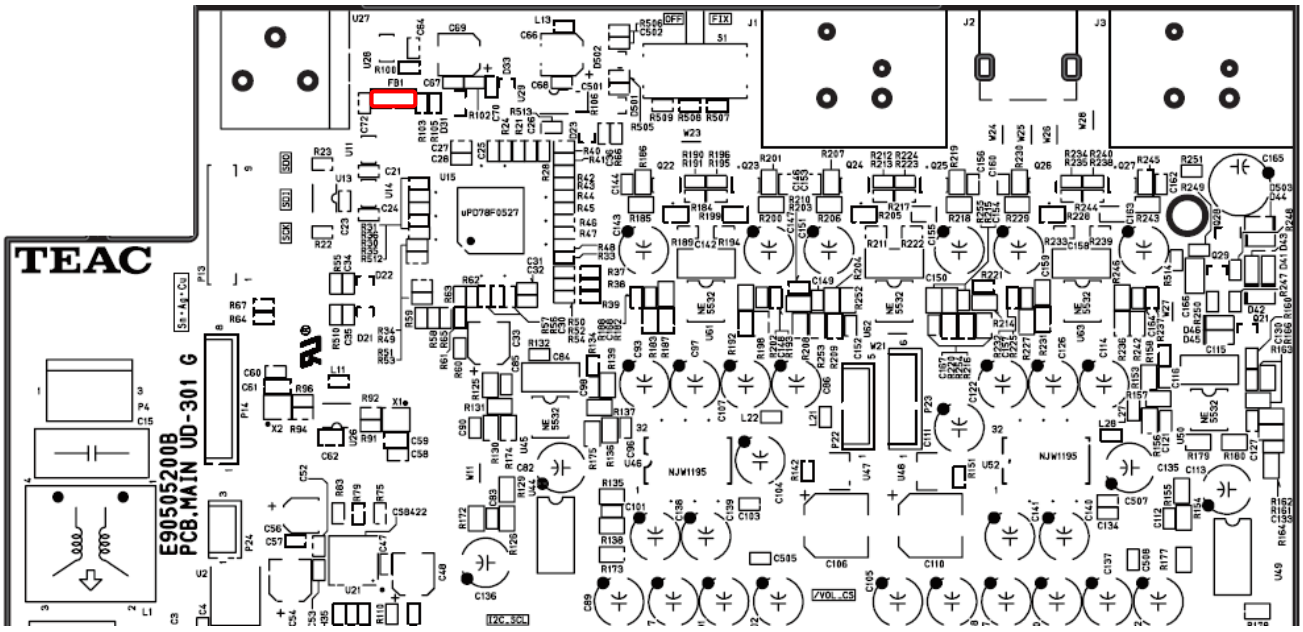

TEAC

TECHNICAL INFORMATION

TEAC consumer equipment: 8 products,
Countermeasure of soldering failure of filter part

No. cp-**1609**
DATE 10th Jun. 2016

[7] UD-501-B

Expected failure symptom in case of non-soldering	**COAXIAL communication is not available**
Target LOT	**(August, 2015 or later) 037LOT(S/N: 0370001-)**
Reworded LOT	**(April, 2016 or later) 164LOT（S/N: 1640001-）**
PCBA used	**E95467600A PCBA,MAIN UD501 G**
Target location number	**FB1, FB2(Target are 2points)**

[8] UD-501-S

Expected failure symptom in case of non-soldering	**COAXIAL communication is not available**
Target LOT	**(August, 2015 or later) 037LOT(S/N: 0370001-)**
Reworded LOT	**(April, 2016 or later) 164LOT（S/N: 1640001-）**
PCBA used	**E95467600A PCBA,MAIN UD501 G**
Target location number	**FB1, FB2(Target are 2points)**

(Pattern drawing) *Side A

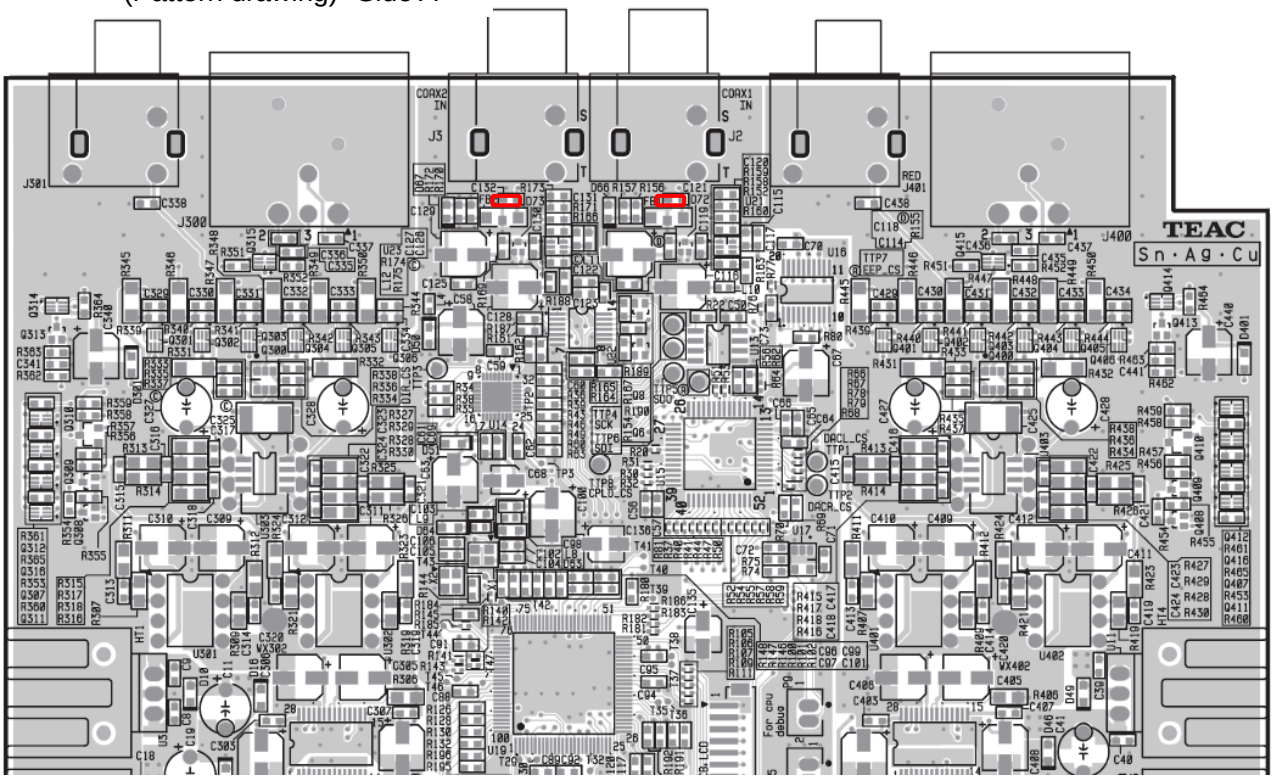

TEAC **TECHNICAL INFORMATION**

TEAC AI-301DA, Improvement of Auto Standby function by Digital input (FW: Ver 8)

No. **cp-1701**
DATE 15th Feb. 2017

Target model

AI-301DA / AI-301DA-SP

Failure contents

Auto Standby function by Digital input does not work correctly.
In case of Auto Standby, sound playback by receiving Digital input from external does not start correctly occurs in rare case.

Countermeasure

Update unit firmware to Version 8.
Note) If Tech Info (cp-1510_RevB) regarding countermeasure of output hum noise has not been implemented, please implement it together.

Working procedure

1. Check firmware version of unit.
 a) After power off condition, keep pressing SOURCE button and Standby/ON button for 5 seconds.
 b) After that, even if each buttons are released, unit firmware version is displayed to the input indicator.

Input indicator	
LINE2 lighting:	Version 1
LINE1 lighting:	Version 2
LINE1 + LINE2 lighting:	Version 3
OPTICAL lighting:	Version 4
OPTICAL + LINE2 lighting:	Version 5
OPTICAL + LINE1 lighting:	Version 6
OPTICAL + LINE1 + LINE2 lighting:	Version 7
COAXIAL lighting:	Version 8

For your information, each firmware version can be checked on the condition below.
USB firmware version check: On the condition that SOURCE button is ON without installing headphone jack.
Bluetooth firmware version check: On the condition that SOURCE button is OFF with installing headphone jack.

TEAC **TECHNICAL INFORMATION**

TEAC AI-301DA, Improvement of Auto Standby function by Digital input (FW: Ver 8)

No. **cp-1701**

DATE 15th Feb. 2017

2. Update unit firmware to Version 8.

For updating firmware, ROM writer (MINICUBE2) and exchange JIG are needed.

Install conversion JIG (8 pin connector) to connector P8 on MAIN PCBA

[Needed item for writing]

- FLASH ROM Writer: MINICUBE2
- Conversion JIG（16pin - 8pin conversion cable）
- PC
- Software： Programming GUI(QB-Programmer) and parameter file(78F0527A.prm)
- Writing data (Program file) : **AI-301DA_V8.hex**

TEAC **TECHNICAL INFORMATION**

TEAC AI-301DA, Improvement of Auto Standby function by Digital input (FW: Ver 8)

No. **cp-1701**

DATE 15th Feb. 2017

How to setup NEC MINICUBE2

1. Unzip NEC.zip

Note) The following captures were taken under Japanese OS environment. Although I'm sorry for your inconvenience, thank you for your understanding.

2. There is qbp_v222_j.exe file in unzipped folder.
Start installation to PC with double clicking. (Wait for while)

Selection menu for INSTALL FILE appears. Enter check mark and click INSTALL button.

1) Select all 2) Click INSTALL button

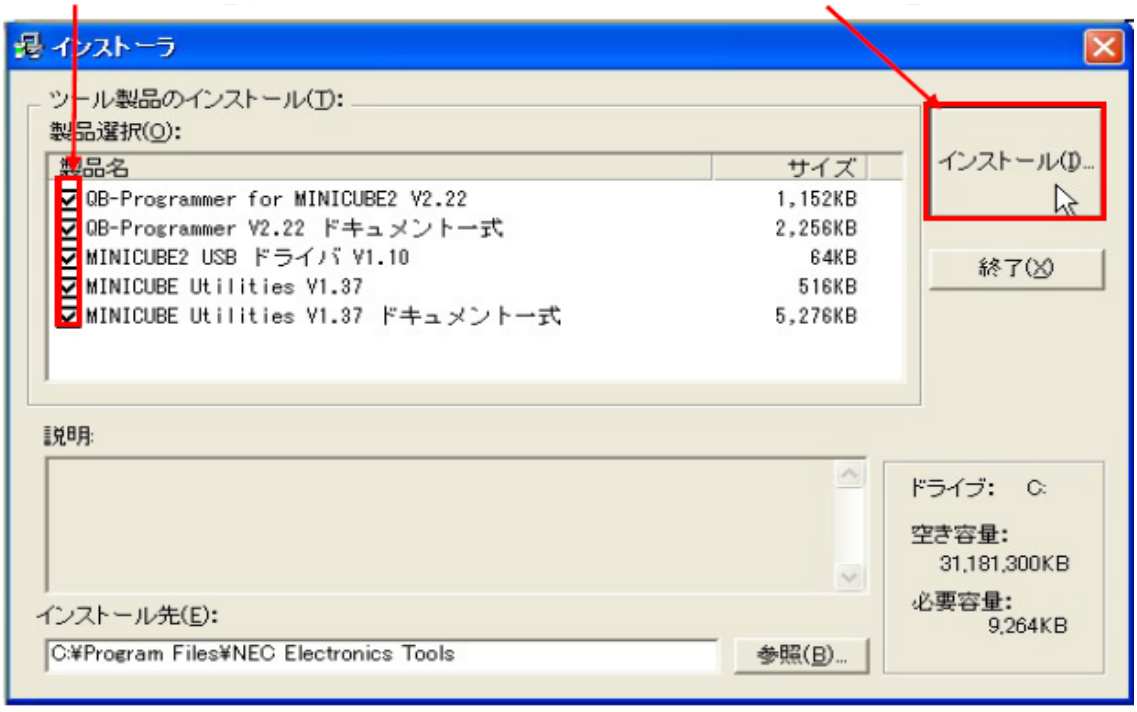

3. Popup whether installation is started appears. Click OK.

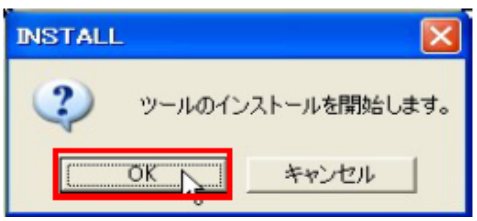

TECHNICAL INFORMATION

TEAC AI-301DA, Improvement of Auto Standby function by Digital input (FW: Ver 8)

No. **cp-1701**

DATE 15th Feb. 2017

4. Start installation with displaying INSTALL Wizard.

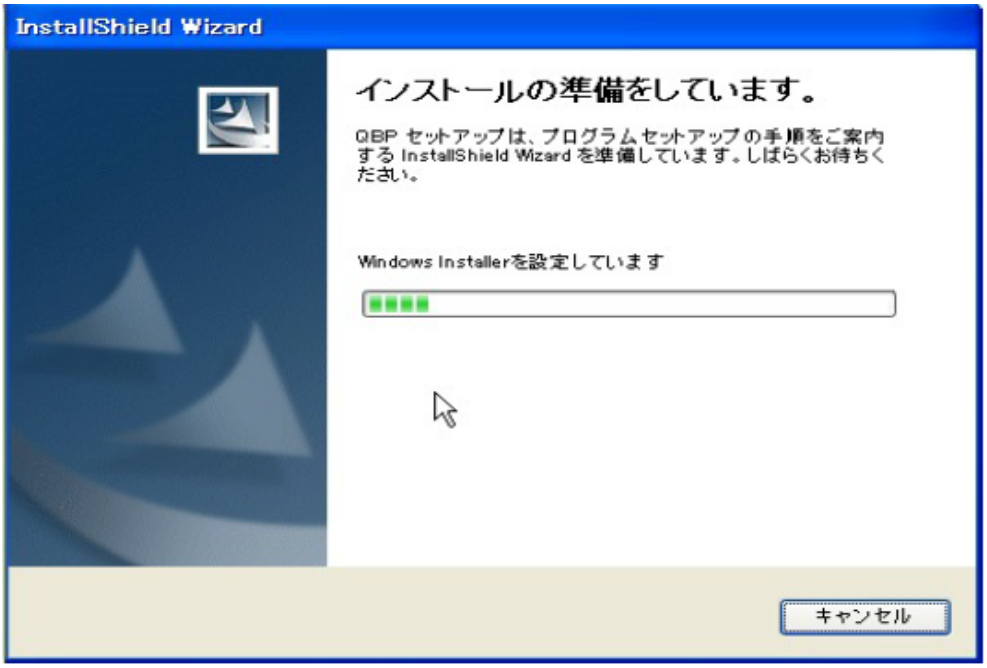

5. Popup of license agreement appears, so click Yes.

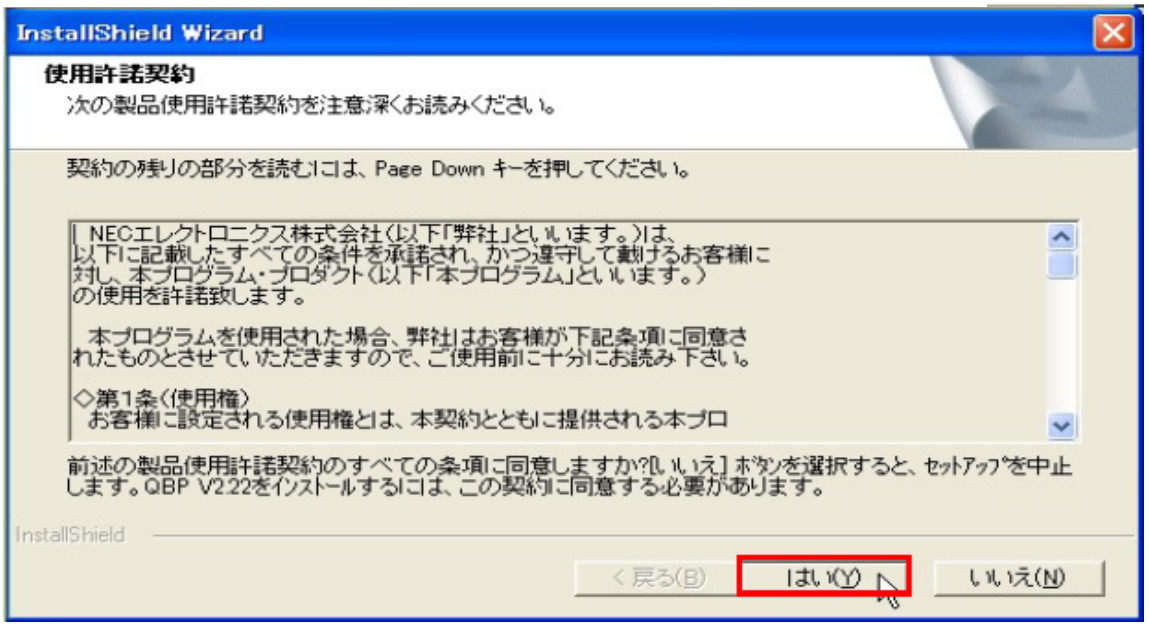

TEAC **TECHNICAL INFORMATION**

TEAC AI-301DA, Improvement of Auto Standby function by Digital input (FW: Ver 8)

No. **cp-1701**

DATE 15th Feb. 2017

6. Setup Status is displayed. Please follow the instruction.

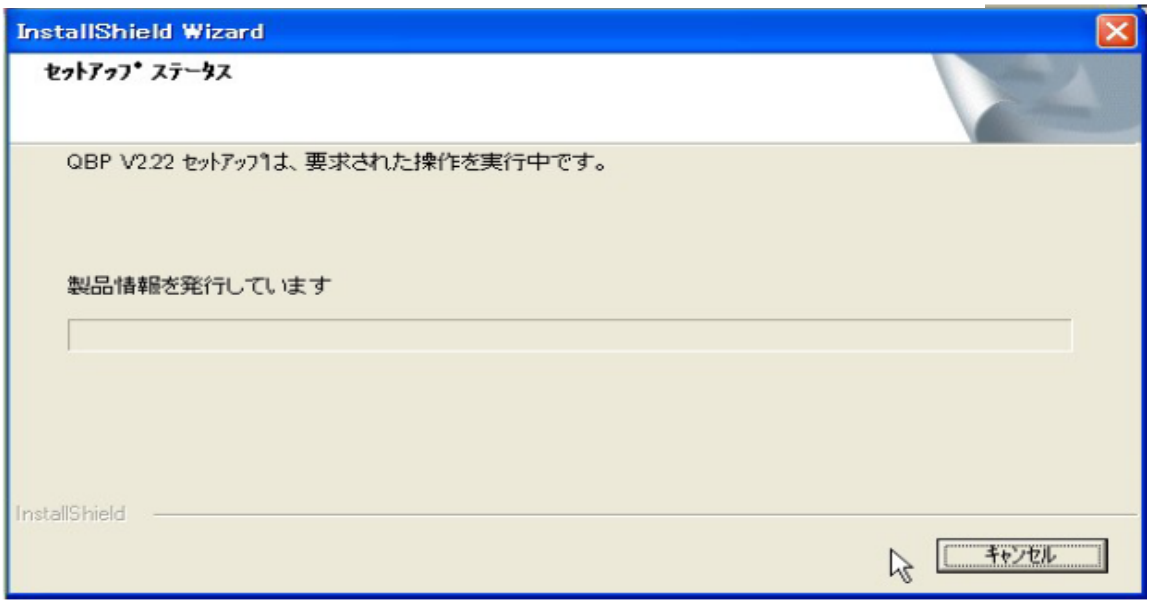

7. Installation complete is displayed. Click OK.

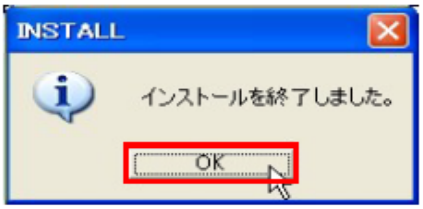

8. INSTALL MENU is displayed, so click finish.

TEAC **TECHNICAL INFORMATION**

TEAC AI-301DA, Improvement of Auto Standby function by Digital input (FW: Ver 8)

No. **cp-1701**

DATE 15th Feb. 2017

Configuration of MINICUBE2

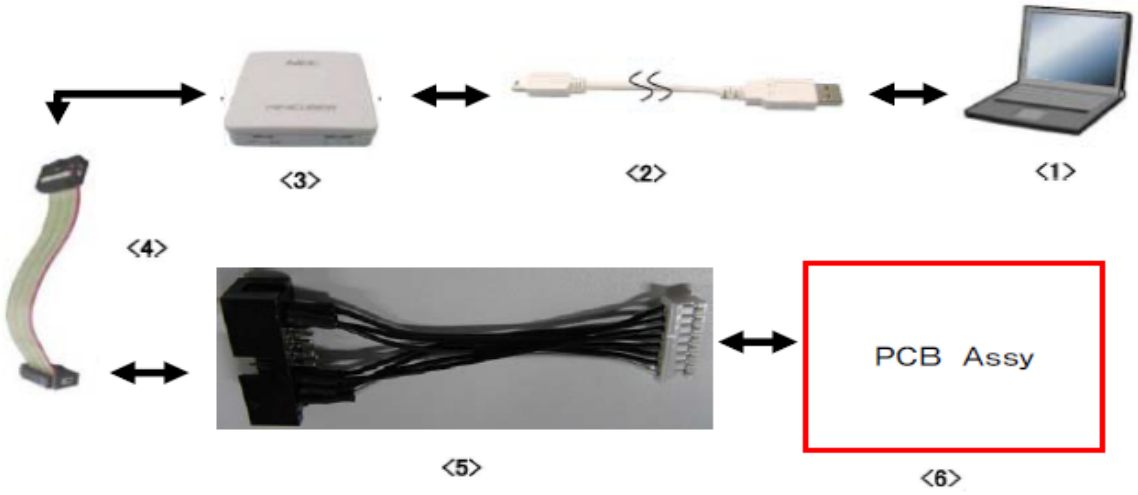

<1> PC having USB (PC which QB-programmer is installed.)
<2> USB cable (Accessory)
<3> MINICUBE2 (Unit)
<4> 16 pin Target Cable (Accessory)
<5> Conversion JIG (Circuit should be referred to below.)
<6> PCB ASSY which CPU is mounted for writing

Conversion JUG

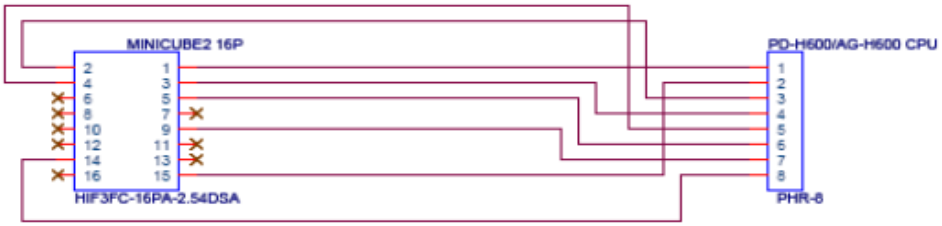

Minicube Adapter Unit: CPU Debug terminal

TEAC **TECHNICAL INFORMATION**

TEAC AI-301DA, Improvement of Auto Standby function by Digital input (FW: Ver 8)

No. **cp-1701**

DATE 15th Feb. 2017

AI-301DA Setup for writing and how to write

1. SW setting of MINICUBE2

*** Caution: When SW of MINICUBE2 is set, remove USB cable!!**

- Set MODE Select FW to **M2**

- Set Power Select SW to **3**

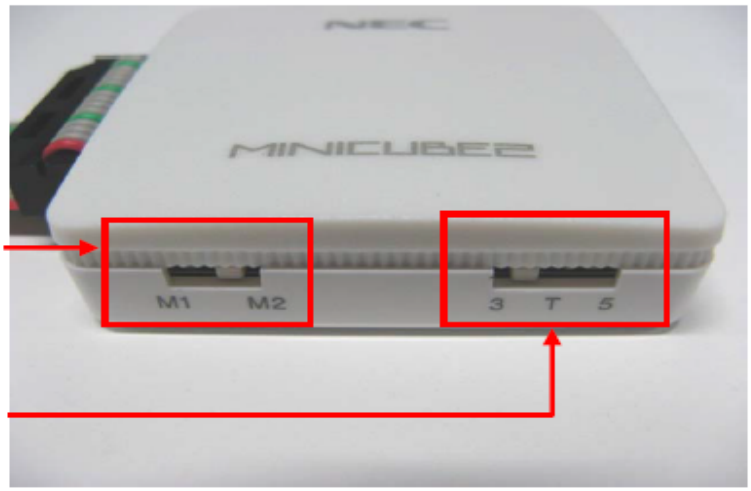

Reference	3: Supply 3V to MINICUBE2 -> PCBA
	5: Supply 5V to MINICUBE2 -> PCBA
	T: PCBA Power is used

2. Connection order

Connect each Cable on the condition that PCBA power is OFF.

1) Connect PCBA with conversion JIG.
2) Connect Conversion JIG with MINICUBE2.

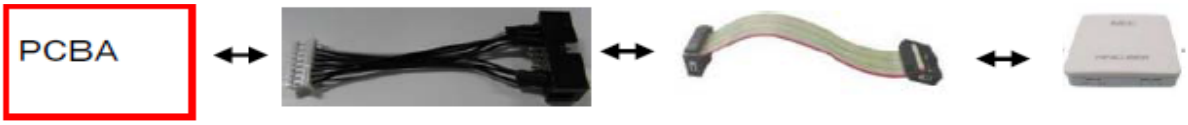

3) Connect MINICUBE2 with PC by using USB cable.

3. Run QB-programmer

Select by the following order, and run QB-programmer.
START of Windows -> All programs -> NEC Electronics Tools -> QBP -> V2.22 ->
-> QBP V2.22 QB-programmer
After running, MODE LED of MINICUBE2 lights to Green.

4. Power ON of PCBA

TECHNICAL INFORMATION

TEAC AI-301DA, Improvement of Auto Standby function by Digital input (FW: Ver 8)

No. **cp-1701**

DATE 15th Feb. 2017

5. Setup for Programming
When QB-Programmer is started, this setup always should be done.

1) Execute "Device" -> "Setup" from MENU Bar.
2) POPUP of Device Setup Dialog appears. Click "Standard".
3) Click "PRM File Read", and open Parameter File Select Dialog.
Select Device Parameter for writing CUP. [**78F0527A.prm**]

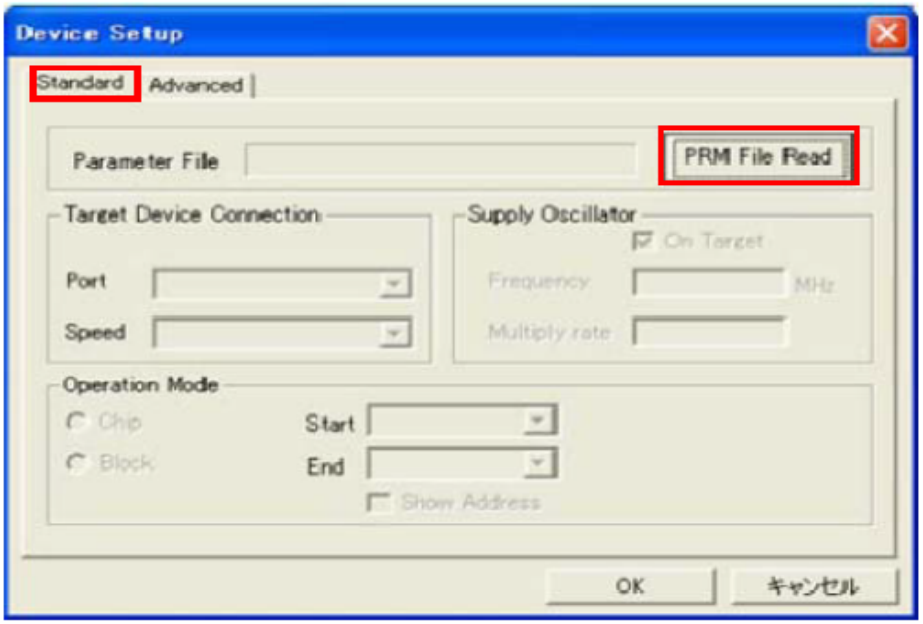

Select the location of 78F0527A.prm

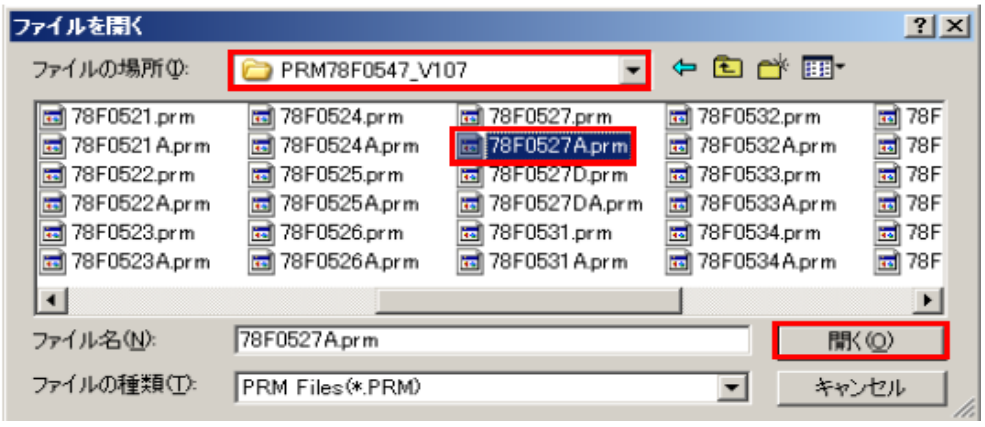

TEAC **TECHNICAL INFORMATION**

TEAC AI-301DA, Improvement of Auto Standby function by Digital input (FW: Ver 8)

No. **cp-1701**

DATE 15th Feb. 2017

4) Setup for Target Device Connection, Supply Oscillator, Operation Mode.
Refer to the following capture.

Target Device Connection
Port : **UART-Ext-QB2CLK**
Speed : **115200bps**

Supply Oscillator
Frequency : **8MHz**
Multiply rate : 1.00

Operation Mode Check to Chip

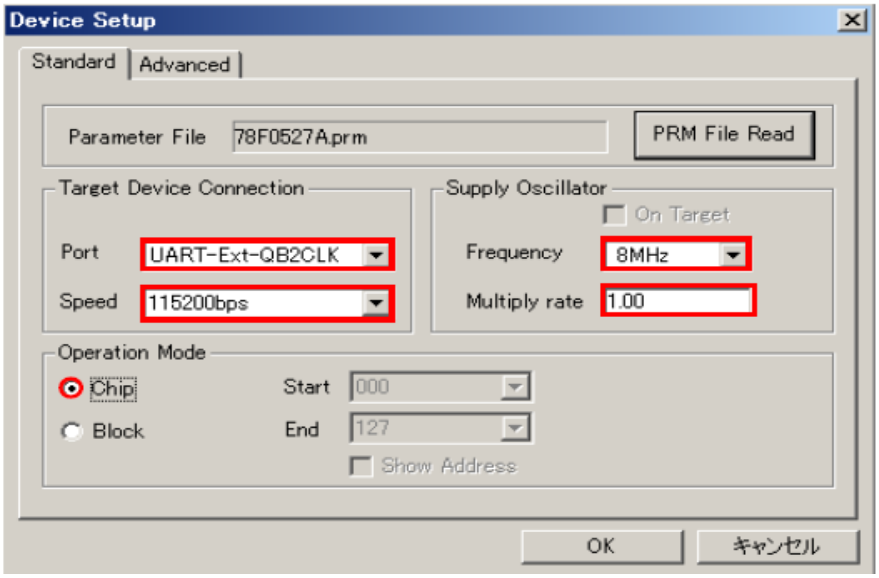

5) Setup for Command Options and Security Settings
Click "Advanced" (Refer to the following capture.)
Command Options
Check to Blank Check Before Erase and Read verify after Program
Security Settings
Boot Block end : Set 003

6) Click "Ok". Programming setup is completed, and return to Main display.

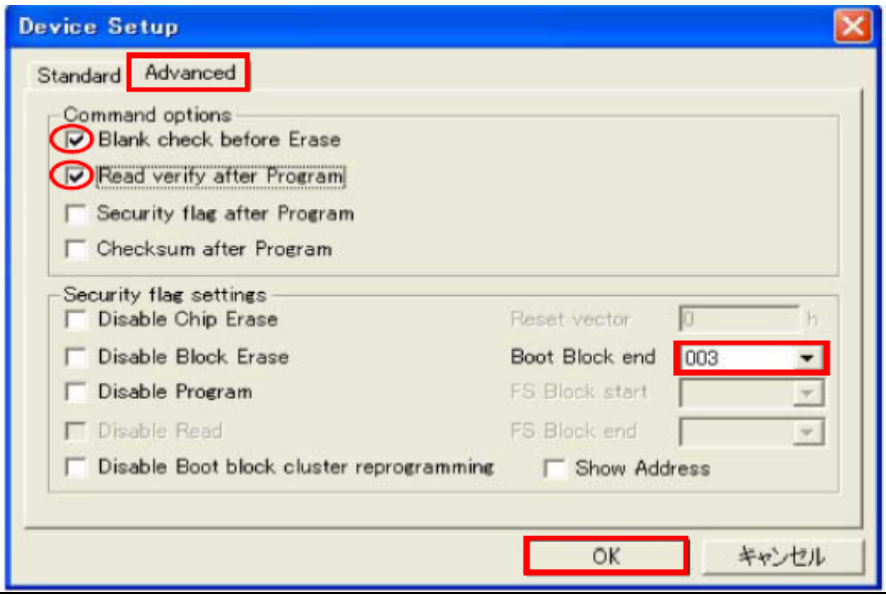

TEAC **TECHNICAL INFORMATION**

TEAC AI-301DA, Improvement of Auto Standby function by Digital input (FW: Ver 8)

No. **cp-1701**

DATE 15th Feb. 2017

The following capture is MAIN display

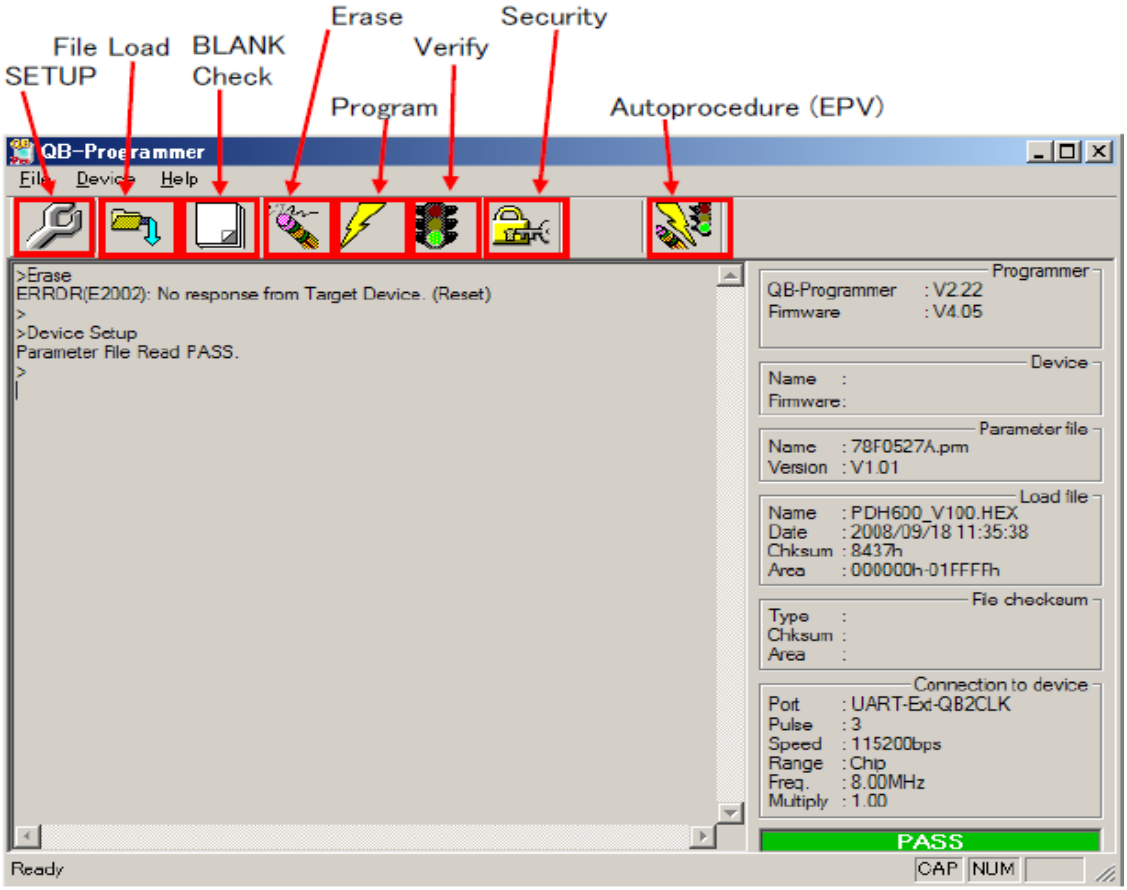

6. Selection of Program File

1) Execute "File" -> "Load" from MENU Bar.
2) POPUP of Program File selection appears.
3) Select writing file, and click "Open".
   * Regarding writing data, the latest firmware release should be used.

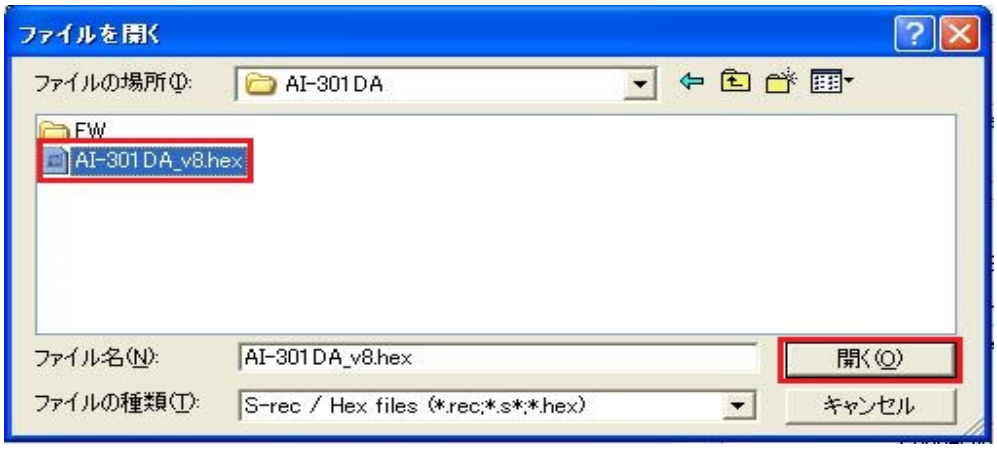

TECHNICAL INFORMATION

TEAC AI-301DA, Improvement of Auto Standby function by Digital input (FW: Ver 8)

No. **cp-1701**

DATE 15th Feb. 2017

4) If the file reading is finished normally, "Success read HEX file." is displayed and "PASS" is displayed in the lower right of MAIN display.

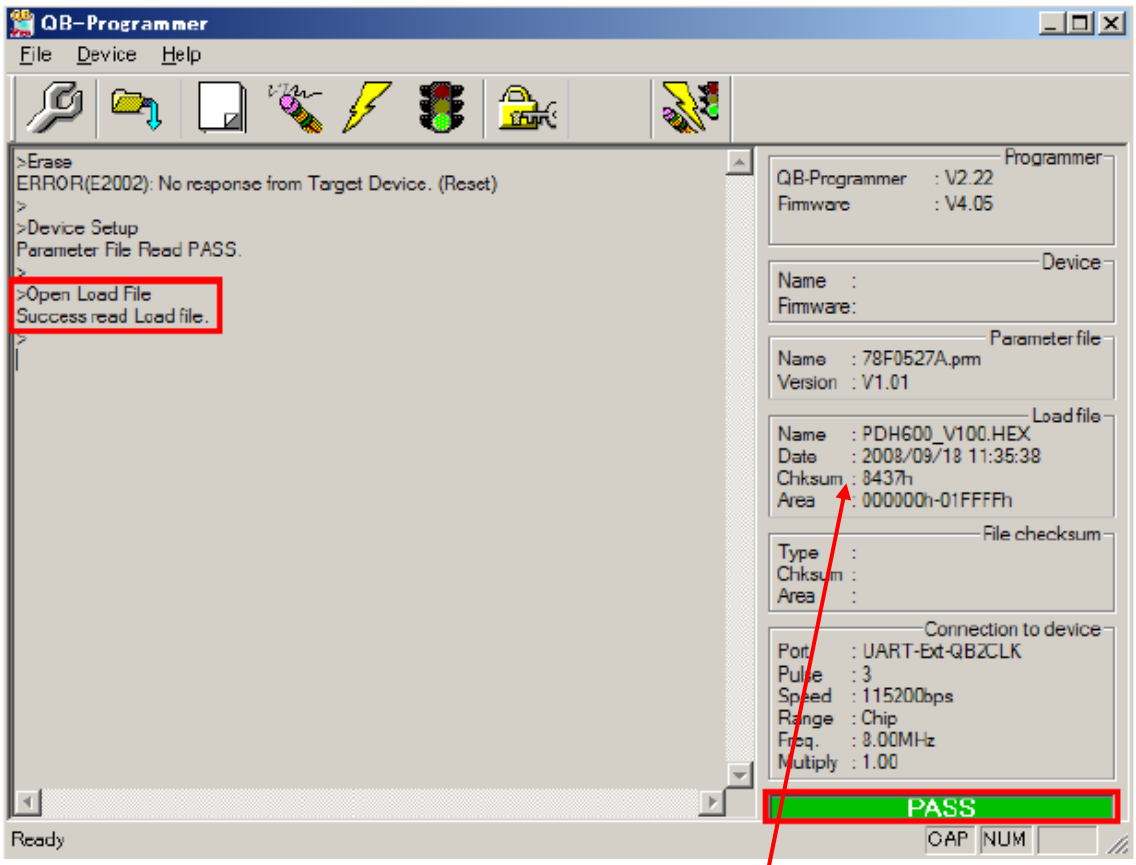

NAME：AI-301DA_v8.hex
Date：2017/01/23
Check sum： E942h

TEAC **TECHNICAL INFORMATION**

TEAC AI-301DA, Improvement of Auto Standby function by Digital input (FW: Ver 8)

No. **cp-1701**

DATE 15th Feb. 2017

7. Working for writing
   Execute Autoprocedure (EPV).
   Execute "Device" -> " Autoprocedure".
   Note) It is executed in the following order.
   Blank Check -> Erase (If it is not Blank.) -> Program -> Verify -> Security
   During executing, MODE LED of MINICUBE2 lights to Yellow.
   If writing is finished normally, MODE LED of MINICUBE2 lights to Green, and "PASS" is displayed in the lower right of MAIN display.

- **When writing is executed, countermeasure against static electricity should be secured!!**

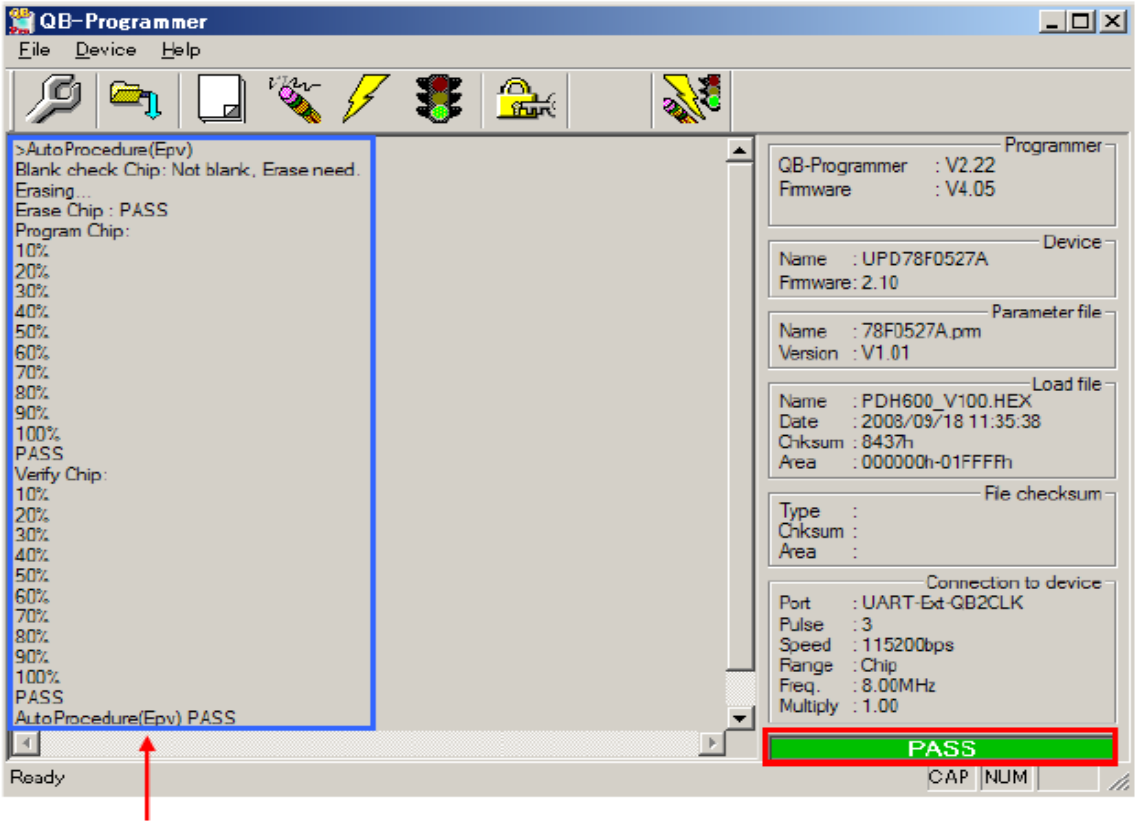

Command and Status are displayed.

8. Disconnection order of SYSTEM
   Caution: Please finish in the following order.
   If this order is mistaken, CPU and MINICUBE2 may be broken.
   1) Close QB-Programmer.
   * When QB-Programmer is closed, setting information is saved in "qbp.ini".
   If QB-Programmer is restarted, it starts with reading the setting of when it was closed.

   2) Power OFF of PCBA.

   3) Disconnect each connection cable. Disconnect in order of conversion JIG -> USB cable.