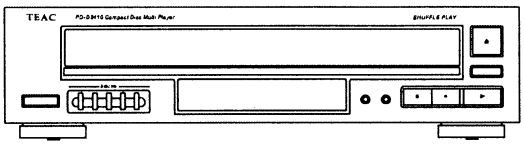

TEAC

SERVICE MANUAL

PD-D2410

Compact Disc Changer

COMPACT disc DIGITAL AUDIO

NOTES

- PC board shown are viewed from parts side.
- The parts with no reference number or no parts number in the exploded views are not supplied.
- As regards the resistors and capacitors, refer to the circuit diagrams contained in this manual.
- ⚠ Parts marked with this sign are safety critical components. they must be replaced with identical components - refer to the appropriate parts list and ensure exact replacement.

CONTENTS

1 SAFETY INFORMATION 2
2 SPECIFICATIONS 3
3 EXPLODED VIEW AND PARTS LIST 4
4 PC BOARDS AND PARTS LISTS 8
5 WIRING DIAGRAM 12
6 INCLUDED ACCESSORIES 14

PD-D2410

1 SAFETY INFORMATION

SAFETY INFORMATION

This product has been designed and manufactured according to FDA regulations "title 21, CFR, chapter 1,subchapter J,based on the Radiation Control for Health and Safety Act of 1968" and is classified as class 1 laser product. There is not hazardous invisible laser radiation during operation because invisible laser radiation emitted inside of this product is completely confined in the protective housings. The label required in this regulation is shown ①.

• CAUTION

USE OF CONTROLS OR ADJUSTMENT OR PERFORMANCE OF PROCEDURES OTHER THAN THOSE SPECIFIED HEREIN MAY RESULT IN HAZARDOUS RADIATION EXPOSURE.

DO NOT REMOVE THE PROTECTIVE HOUSING USING SCREWDRIVER.

IF THIS PRODUCT DEVELOPS TROUBLE, MAKE A CONTACT WITH OUR SERICEMAN, AND DO NOT USE THE PRODUCT A TROUBLED STATE.

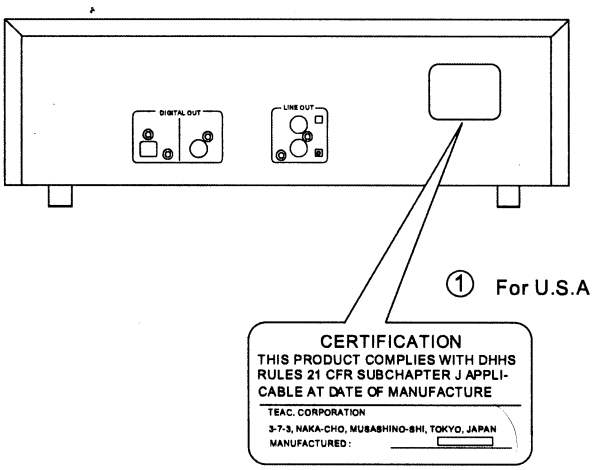

Optical pickup:	
Type	: SF-P101NXR
Manufacturer	: SANYO Electric Co., Ltd.
Laser output	: Less than 0.5 mW on the objective lens
Wavelength	: 765 - 815 nm (CD)

2 SPECIFICATIONS

System :	Digital compact disc changer
Pick up :	3-beam laser
Error correction:	CIRC
Sampling frequency:	44.1 kHz
D/A converter :	Dual 1-bit linear
Digital filter :	4-times oversampling
Frequency response:	20 ~ 20,000 Hz
Total harmonic distortion :	Less than 0.02% (1 kHz)
S/N ratio :	More than 100 dB
Wow and flutter :	Below measurable limit
Channel separation :	More than 85dB (1kHz)
Output voltage max:	2.1 Vrms

General

Power requirements:	AC 120V , 60 Hz
Power consumption :	7 watts
Dimension (W x H x D):	(17-1/8 x 4-1/2 x 15-3/8) inches 435 x 115 x 390 mm
Weight:	6.2 kg (13-5/8 lbs)
Supplied Accessories :	Wireless remote control RC-722 x 1 Plug cord RCA 2P

- Design and specifications are subject to change without notice.
- Illustrations may differ slightly from production model.

3 EXPLODED VIEWS AND PARTS LIST

EXPLODED VIEW - 1

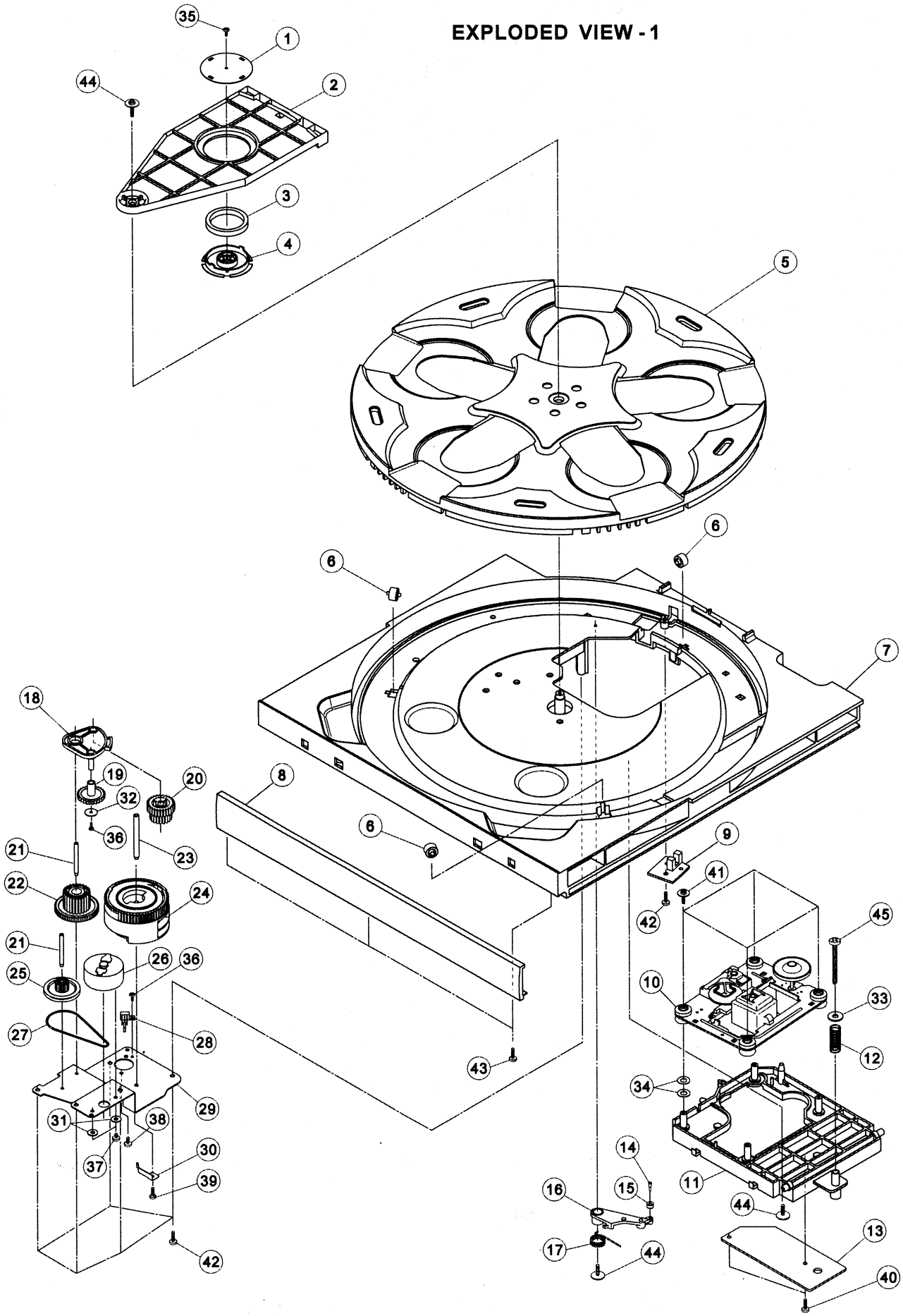

EXPLODED VIEW-1

REF. NO	PARTS NO.	DESCRIPTION	REMARKS
1-1	CEC2451000900	HOLDER DISC	
1-2	1EA2121A08000	COVER CD	
1-3	CEC2641000300	MAGNET	
1-4	1EA2642A00500	YOKE MAGNET	
1-5	1EA2541A00500	TURNTABLE CHANGER	
1-6	1EA2751A00300	ROLLER T.T	
1-7	CEC2111002300	CABINET TOP	
1-8	CEC2144002325	DECORATION CD	
1-9	CEC0B10025700	SENSOR PCB ASSY	
1-10	13933102	DA11T3CN	
1-11	CEC2332002600	BASE CD MECHA	
1-12	CEC2812002200	SPRING COMP	
1-13	CEC0B10034000	SUB PCB ASSY	
1-14	1EA2372A01500	SHAFT ROLLER LOCK	
1-15	1EA2751A00400	ROLLER LOCK	
1-16	CEC2721001200	LEVER LOCK	
1-17	CEC2816001400	SPRING LEVER LOCK	
1-18	1EA2721A02900	LEVER CHANGE	
1-19	1EA2511A06200	GEAR IDLER	
1-20	1EA2511A06100	GEAR PINION	
1-21	CEC2372000400	SHAFT GEAR LOAD	
1-22	1EA2511A06000	GEAR LOAD	
1-23	CEC2372000500	SHAFT GEAR CAM	
1-24	1EA2511A05900	GEAR CAM	
1-25	1EA2524A00800	PULLEY GEAR	
1-26	1EA4M10A01600	MOTOR 6V	
1-27	CEC2563001100	BELT SQUARE	
1-28	CEC4S13000600	SW LEAF	
1-29	CEC2312000200	CHASSIS SUB	
1-30	CEC2814000400	SPRING PLATE	
1-31	SWZ328R00R5SE	WASHER Z3.2x8x0.5MM	
1-32	CEC2383006500	WASHER SPECIAL 2x10x0.3MM	
1-33	SWZ451201R0SE	WASHER Z4.5x12x1MM	
1-34	CEC2383005800	WASHER SPECIAL 5x10x0.3MM	
1-35	SFBDN204ROSE-	SCR S-TPG BIN 2x4MM	
1-36	SFBDN205ROSE-	SCR S-TPG BIN 2x5MM	
1-37	SM2PN263ROSE-	SCR S-PAN 2.6x3MM	
1-38	SFBDN265ROSE-	SCR S-TPG BIN 2.6x5MM	
1-39	SFBPN266ROSE-	SCR S-TPG PAN 2.6x6MM	
1-40	SFBDN268ROSE-	SCR S-TPG BIN 2.6x8MM	
1-41	CEC2381006400	SCR SPECIAL 2.6x6MM WH	
1-42	SFBDN308ROSE-	SCR S-TPG BIN 3x8MM	
1-43	SFBDN308ROSM-	SCR S-TPG BIN 3x8MM	
1-44	13124201283000	SCR (B TITE SEMS) 3x8MM WH	
1-45	SM2PN40250SE-	SCR PAN 4x25MM	

PD-D2410

EXPLODED VIEW -2

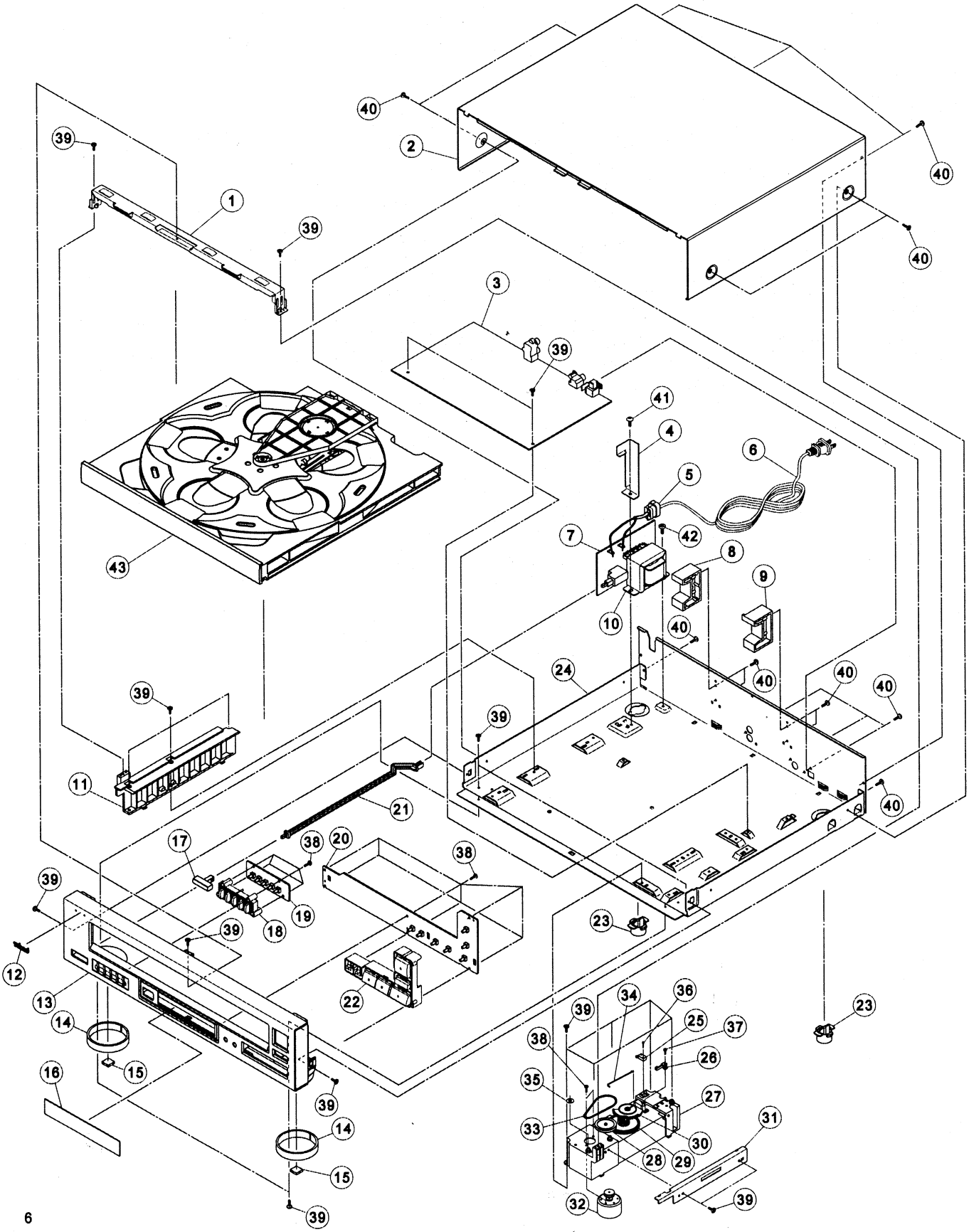

EXPLODED VIEW-2

REF. NO		PARTS NO.	DESCRIPTION	REMARKS
2-1		CEC2338003900	ANGLE	
2-2		CEC2121000910	COVER	
2-3		CECOB10033800	MAIN PCB ASSY	
2-4		CEC2322001200	BRACKET-M CABINET	
2-5	⚠	CEC2446000200	BUSHING	
2-6		CEC4W10006400	AC CORD SPT-26FT	
2-7		CECOB10034400	POWER PCB ASSY	
2-8		CEC2366000300	STOPPER - LEFT	
2-9		CEC2366000301	STOPPER - RIGHT	
2-10	⚠	4L50006430	TRANSFORMER EI-48	
2-11		CEC2332001300	BASE LEFT	
2-12		CEC2163004000	BADGE	
2-13		CEC2141002417	ESCUTCHEON	
2-14		CEC2144002202	DECORATION	
2-15		CEC2571000800	FELT	
2-16		CEC2164003518	WINDOW	
2-17		CEC2174004600	KNOB, PUSH	
2-18		CEC2175013400	BUTTON, 5KEY	
2-19		CEC0B10033910	KEY PCB ASSY	
2-20		CECOB10033900	DISPLAY PCBASSY	
2-21		CEC2351000800	JOINT	
2-22		CEC2175009700	BUTTON, PLAY	
2-23		CEC2251001600	LEG	
2-24		CEC2311003500	CHASSIS	
2-25		42312070100	LEVER SW 1P1T	
2-26		42319798900	LEAF SW	
2-27		CEC2332001200	BASE RIGHT	
2-28		1EA2524A01200	PULLEY	
2-29		1EA2511A08000	GEAR LOAD	
2-30		1EA2511A08101	GEAR RETURN	
2-31		CEC2321000500	BRACKET-M RIGHT	
2-32		CEC0M10002500	ASSY MOTOR	
2-33		CEC2563000900	BELT SQUARE	
2-34		1EA2815A00400	SPRING WIRE	
2-35		CEC2383004800	WASHER SPECIAL 4x10x0.3MM	
2-36		ST3PN178ROSM-	SCR S-TPG PAN 1.7x8MM	
2-37		SFBPN266ROSE-	SCR S-TPG PAN 2.6x6MM	
2-38		SFBDN268ROSE-	SCR S-TPG BIN 2.6x8MM	
2-39		SFBDN306ROSE-	SCR S-TPG BIN 3x6MM	
2-40		SFBDN308ROSM-	SCR S-TPG BIN 3x8MM	
2-41		SFSTN406ROSE-	SCR S-TPG TR S4x6MM	
2-42		SFSDN406ROSE-	SCR S-TPG BIN 4x6MM	
2-43		CEC0111001900	ASSY CABINET	

PD-D2410

4 PC BOARDS AND PARTS LIST

MAIN PCB ASSY

REF. NO	PARTS NO.	DESCRIPTION	REMARKS
	CECOB10033800	MAIN PCB ASSY	
	CEC4B10033800	MAIN PCB	
C154,155	⚠ CB1E222ZFAFNA	CE - 25V 2200UF	
C156	⚠ CB1E472ZFAFNA	CE - 25V 4700UF	
CN101	43-910006PPH-00	WAFER 6 PIN P=2MM	
CN102	43-9B1251311-00	WAFER 31 PIN P=1.25MM	
CN103	43-9A2001111-00	WAFER 11 PIN P=2MM	
CN104	43-9A2501051-00	WAFER 5 PIN P=2.5MM	
D101-104,107,108, D111-114	DD1A3-I - - - - - C	DIODE 1A3-I	
D105	DZMTZ2.4B - - - A	ZENER DIODE 2.4V	
D109	DZMTZ4.3A - - - A	ZENER DIODE 4.3V	
D110	DZMTZ3.3B - - - A	ZENER DIODE 3.3V	
D115	DZMTZ30B - - - - A	ZENER DIODE 30V	
D116	DZMTZ5.1B - - - A	ZENER DIODE 5.1V	
IC101	QS1L9226X01-C	IC - S1L9226X01	
IC102	QS5L9290X01-C	IC - S5L9290X01	
IC103	QS3P825A - - - - C	IC - S3P825A	
IC104	QKA9259D - - - - C	IC - KA9259D	
IC105	QTA7291S - - - - N	IC - TA7291S	
IC106	QNJ M2068D - - - N	IC - NJM2068D	
IC107	QLKA7808 - - - - N	IC-KA7808	
IC108	QLKA7805 - - - - N	IC-KA7805	
IC110	QNJM78L06A - - N	IC-NJM78L06A	
IC111	QNJM79L06A - - N	IC-NJM79L06A	
JK101	CEC4J12000801	RCA JACK PJB-21V05	
JK102	CEC4J12002800	RCA JACK RCA-107A-03	
JK103	CEC4U23001000	CONVERTOR GP1FA550TZ	
L101,102,103	38-302200012-31	AXIAL INDUCTORS 22UH	
Q101	T2SA933AS-R -C	TR-2SA933AS	
Q102,107	TDTC124ESA - - C	TR-DTC124ESA	
Q103	TDTA124ESA - - C	TR-DTA124ESA	
Q104,105	T2SD1936 - T - - C	TR-2SD1936T	
Q106	T2SD882Y - - - - C	TR-KSD882Y	
T101	1EA4L13A00100	TRANS PULSE 7.5MM - BLACK	
X101	42259711010	CRYSTAL 16.9344MHZ	
X102	31-380004000-18	CER.RESONATOR-ZTT8.0MT	

MAIN PCB

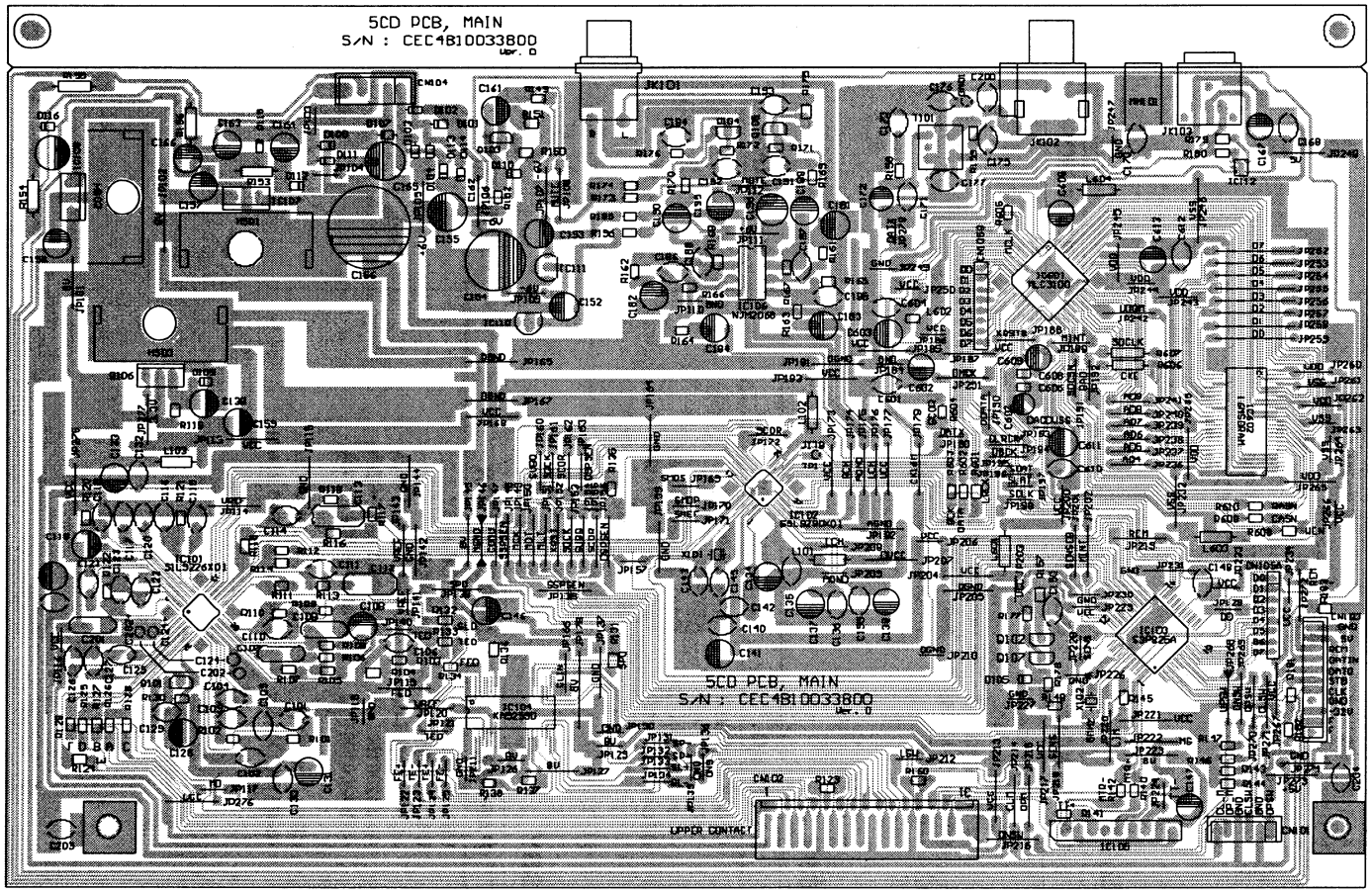
5CD PCB, MAIN
S/N : CEC4B10033B00
5CD PCB, MAIN
S/N : CEC4B10033B00
UPPER CONTACT

PD-D2410

DISPLAY PCB ASSY

REF. NO		PARTS NO.	DESCRIPTION	REMARKS
		CECOB10033900	DISPLAY PCBASSY	
		CEC4B10033900	DISPLAY PCB	
CN301		44-512832261-10	WAFER 11 PIN P=2MM	
D301-304	⚠	DD1SS133 - - - - A	DIODE 1SS133	
FL301		13-6D2410000-33	V.F.DISPLAY -HNA-13SM24	
IC301		QUPD16311 - - - A	IC - UPD16311	
S301-307		CEC4S14000800	TACT SWITCH H=9MM	
U301		CEC4D61005900	OPTIC RECEIVED MODULE	

POWER PCB ASSY

REF. NO		PARTS NO.	DESCRIPTION	REMARKS
		CECOB10034400	POWER PCB ASSY	
		CEC4B10034400	POWER PCB	
CN202		43-791002031-00	HOUSING 2 PIN	
SW201		CEC4S11002000	SWITCH PUSH POWER	
T201	⚠	4L50006430	TRANSFORMER EI-48	

KEY PCB ASSY

REF. NO	PARTS NO.	DESCRIPTION	REMARKS
	CEC0B10033910	KEY PCB ASSY	
	CEC4B10033910	KEY PCB	
CN303	43-910006PPH-00	WAFER 6 PIN P=2MM	
S308-312	CEC4S14000800	TACH SWITCH H=9MM	

SUB PCB ASSY

REF. NO	PARTS NO.	DESCRIPTION	REMARKS
	CEC0B10034000	SUB PCB ASSY	
	CEC4B10034000	SUB PCB	
CN601	43-9B2001051-00	WAFER 5 PIN P=2MM	
CN602	43-9B2001031-00	WAFER 3 PIN P=2MM	
CN603	43-9B2001061-00	WAFER 6 PIN P=2MM	
CN604	CEC4J10007101	WAFER 16 PIN P=1MM	
CN605	43-9B1251311-00	WAFER 31P P=1.25MM	

DISPLAY PCB

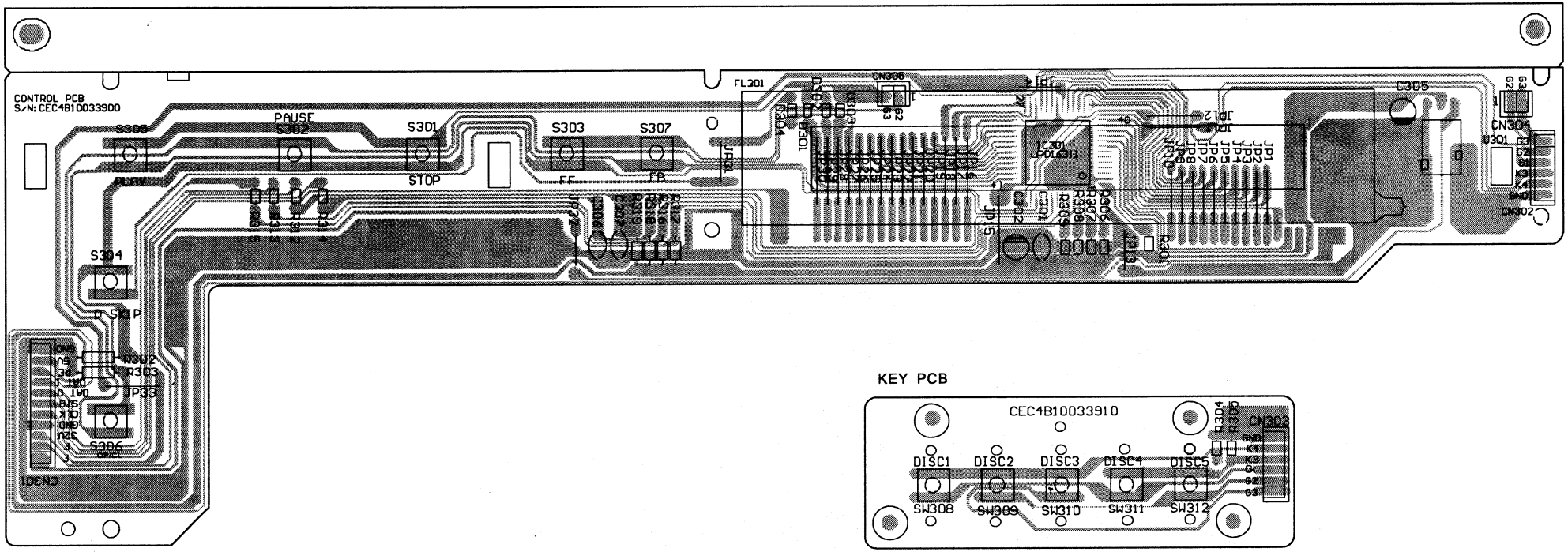

KEY PCB

POWER PCB

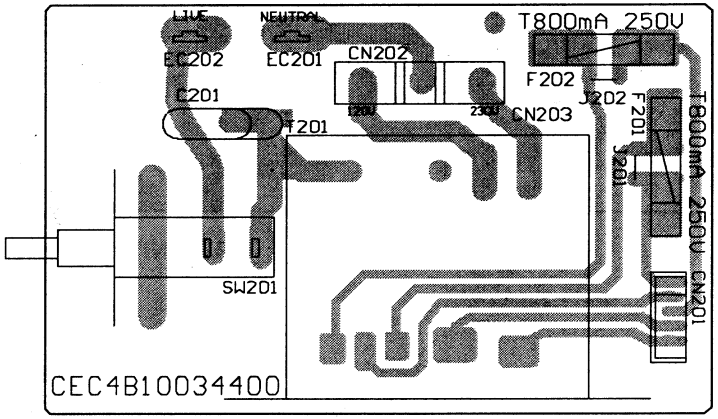

SUB PCB

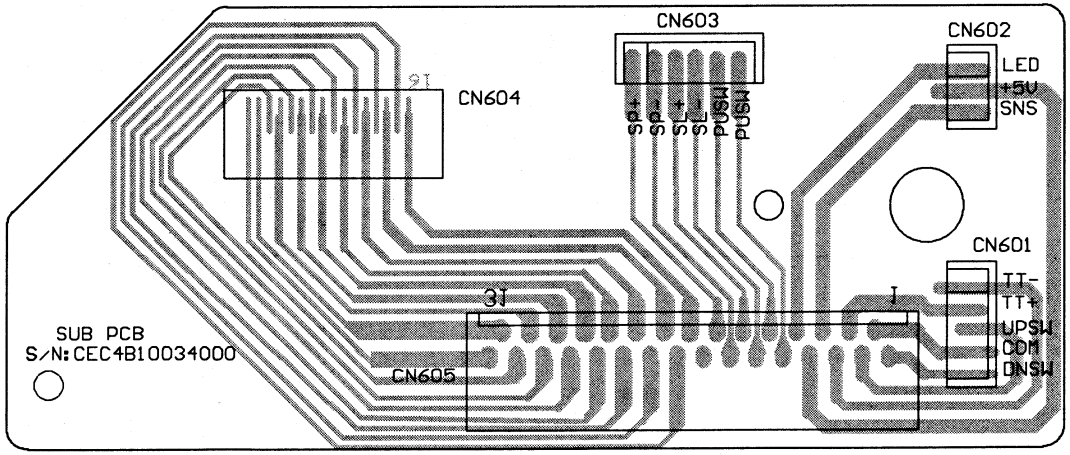

5 WIRING DIAGRAM

MAIN PCB

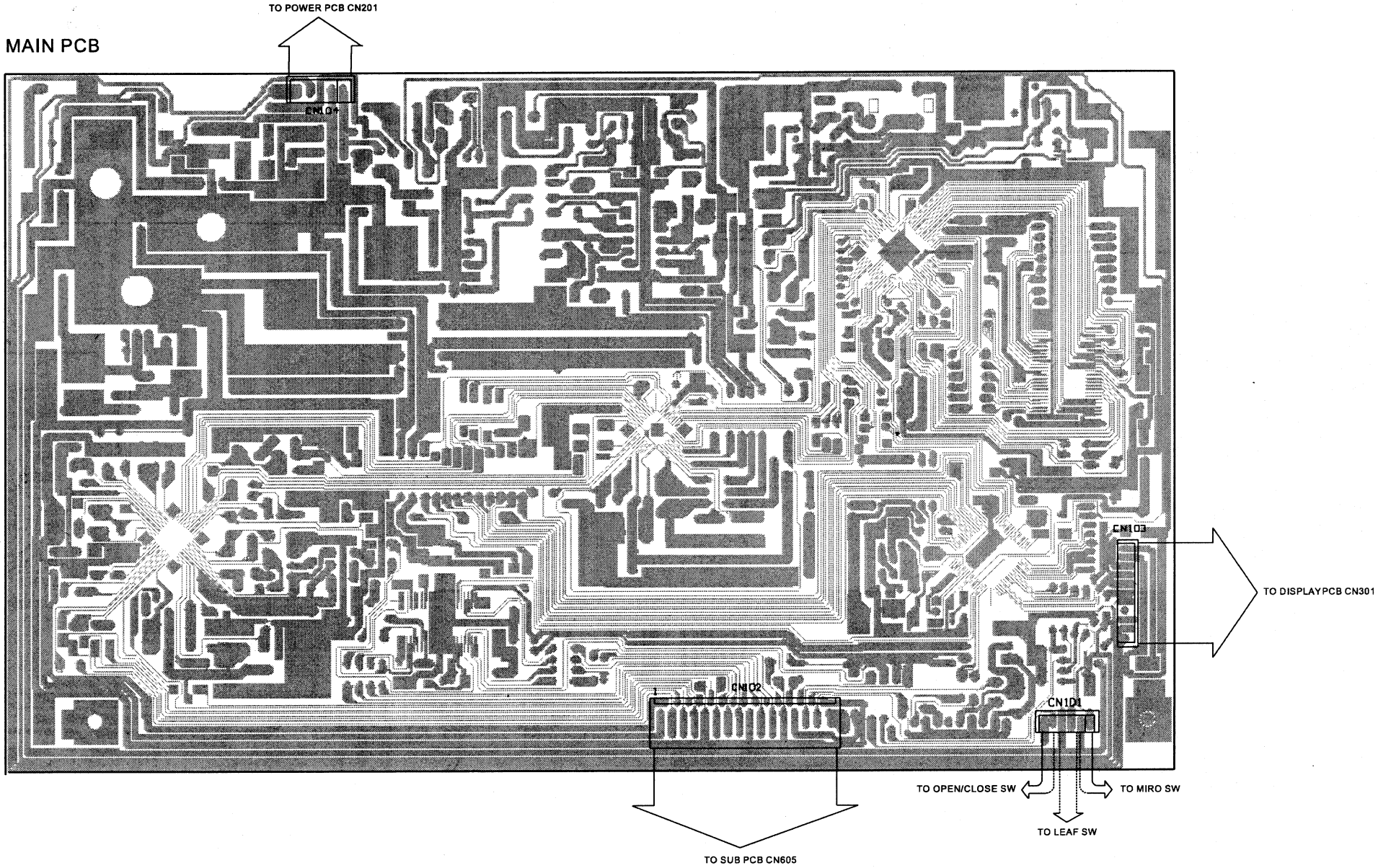

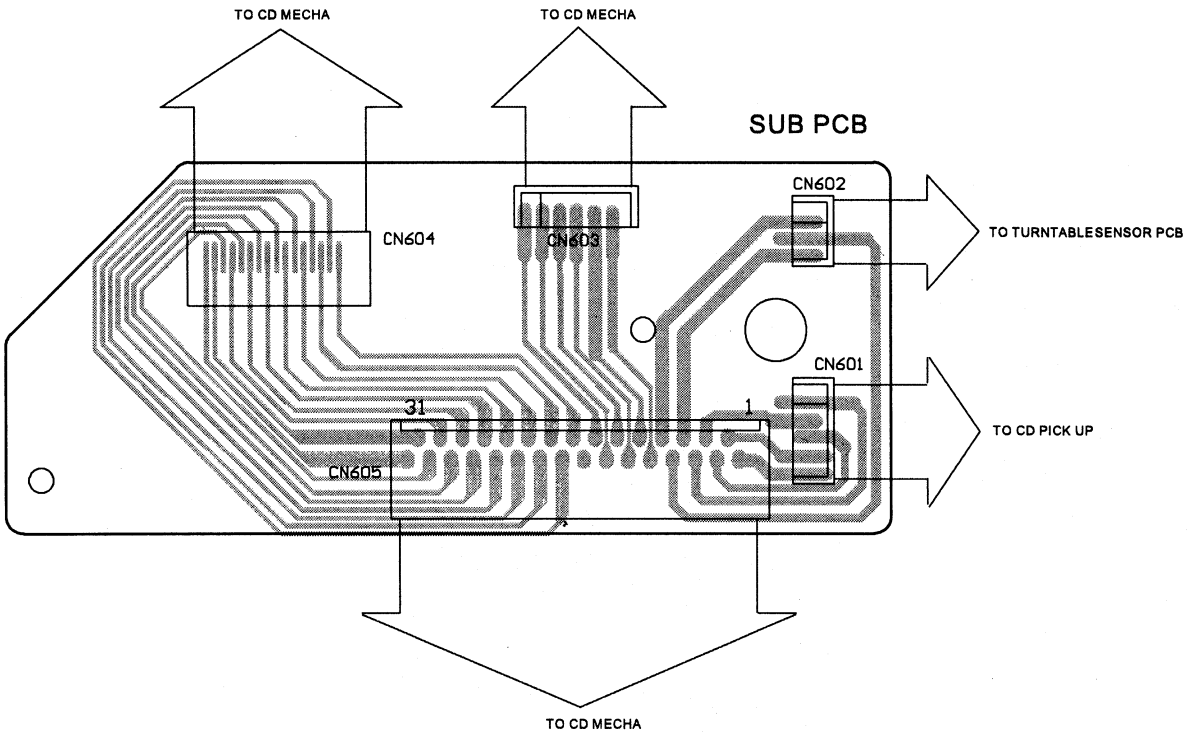
TO CD MECHA
TO CD MECHA
SUB PCB
CN602
TO TURNTABLESENSOR PCB
CN604
CN603
CN601
31
1
TO CD PICK UP
CN605
TO CD MECHA

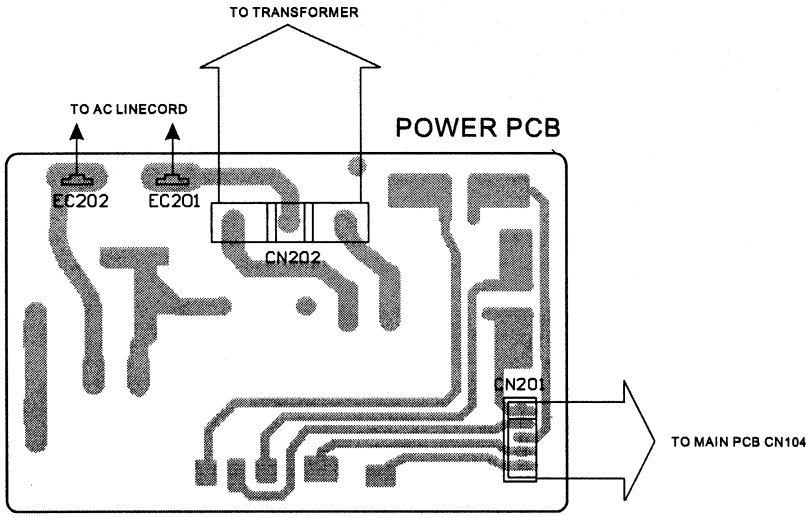
TO TRANSFORMER
TO AC LINECORD
POWER PCB
EC202
EC201
CN202
CN201
TO MAIN PCB CN104

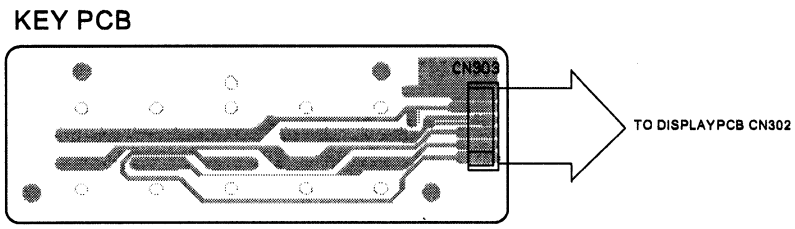
KEY PCB
CN303
TO DISPLAYPCB CN302

6 INCLUDED ACCESSORIES

INCLUDED ACCESSORIES

REF. NO	PARTS NO.	DESCRIPTION	REMARKS
	CEC6P30005001	WARRANTY CARD	
	CEC6P10074030	INSTRUCTION BOOK	
	CEC4W20004600	PLUG-CORD RCA 2P	

PD-D2410

TEAC

TEAC CORPORATION	3-7-3 Nakacho, Musashino-shi, Tokyo 180-8550, Japan Phone:(0422)52-5081
TEAC AMERICA, INC.	7733 Telegraph Road, Montebello, California 90640 Phone: (323)726-0303
TEAC CANADA LTD.	5939 Wallace Street, Mississauga, Ontario L4Z 1Z8, Canada Phone: (905)-890-8008
TEAC MEXICO, S.A.De C.V.	Campesinos 184, Col. Granjas Esmeralda, 09810, Mexico Phone: (525)-581-5500
TEAC UK LIMITED	5 Marlin House, Croxley Business Park, Watford, Hertfordshire, WD188TE, U.K. Phone: 01923-819699
TEAC DEUTSCHLAND GmbH	Bahnstrasse 12, 65205 Wiesbaden-Erbenheim, Germany Phone:0611-71580
TEAC FRANCE S.A.	17, Rue Alexis-de-Tocqueville, CE 00592182 Antony Cedex, France Phone:(1)42.37.01.02
TEAC NEDERLAND BV	Oeverkruid 15, NL-4941 W Raamsdonksveer, Nederland Phone:0162-510210
TEAC BELGIUM NV/SA.	c/o TEAC NEDERLAND BV, Oeverkruid 15, NL-4941 W Raamsdonksveer, Nederland Phone:+31-162-510860
TEAC ITALIANA S.p.A.	Via C, Cantu 11, 20092 Cinisello Balsamo, Milano, Italy Phone:02-66010550
TEAC AUSTRALIA PTY., LTD. A.B.N. 80 005 408 462	280 William Street, Melbourne, VIC 3000, Australia Phone:(03)9672-2400

PREPARED IN HONG KONG

MAIN PCB

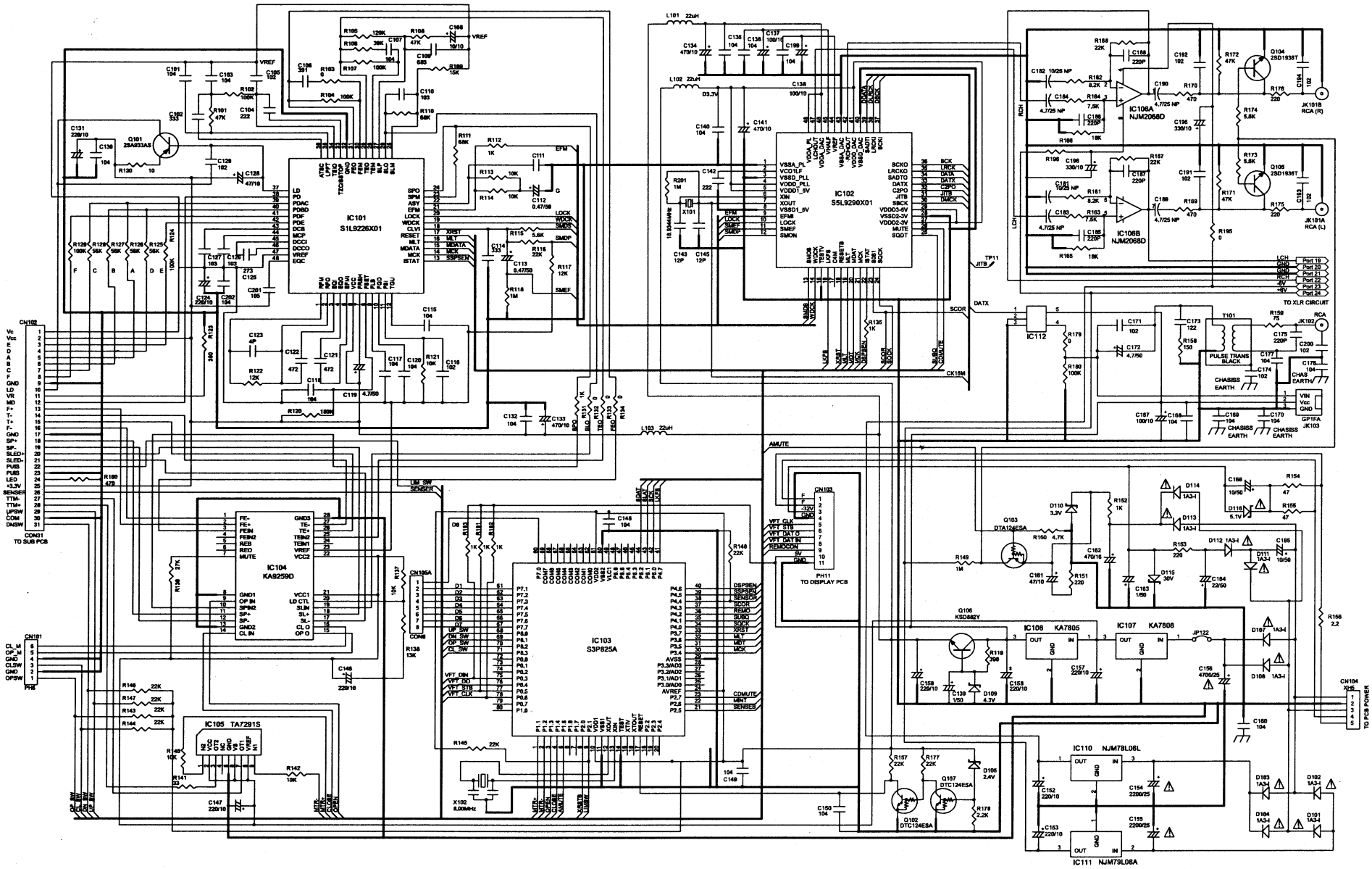

PD-D2410

Compact Disc Changer

DISPLAY PCB

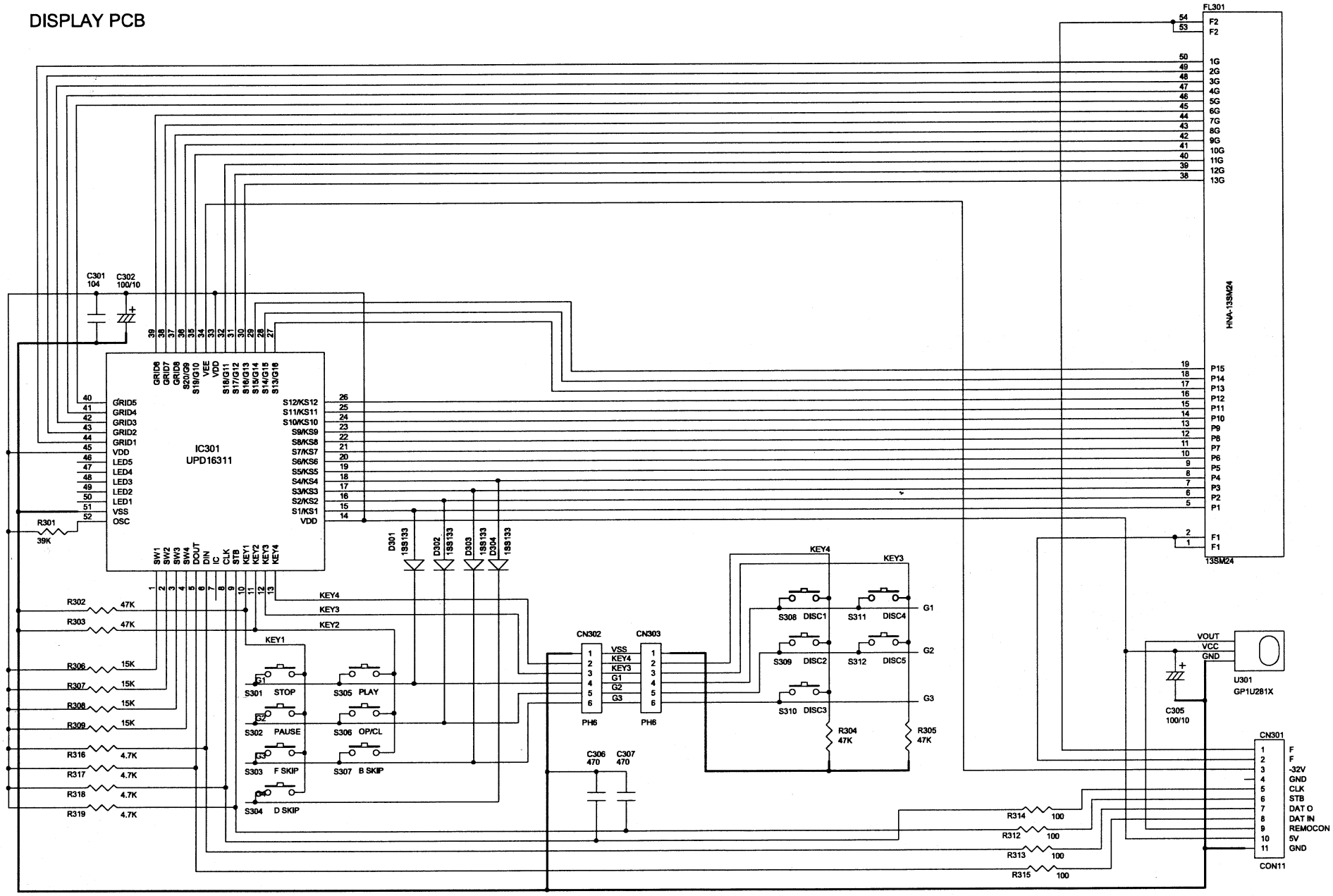

PD-D2410

Compact Disc Changer

CDK93V4 MECHA CIR.

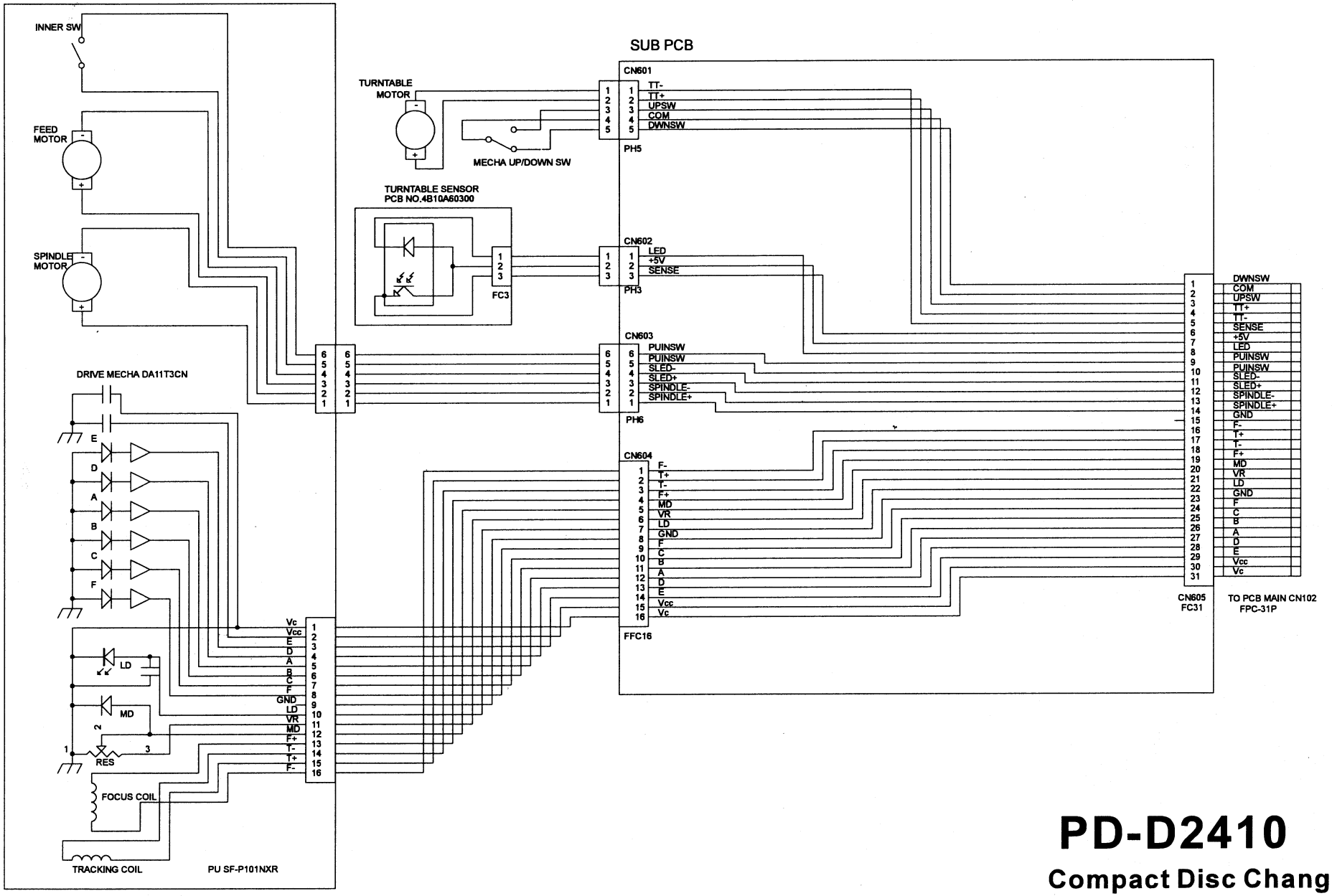

PD-D2410

Compact Disc Changer

POWER PCB

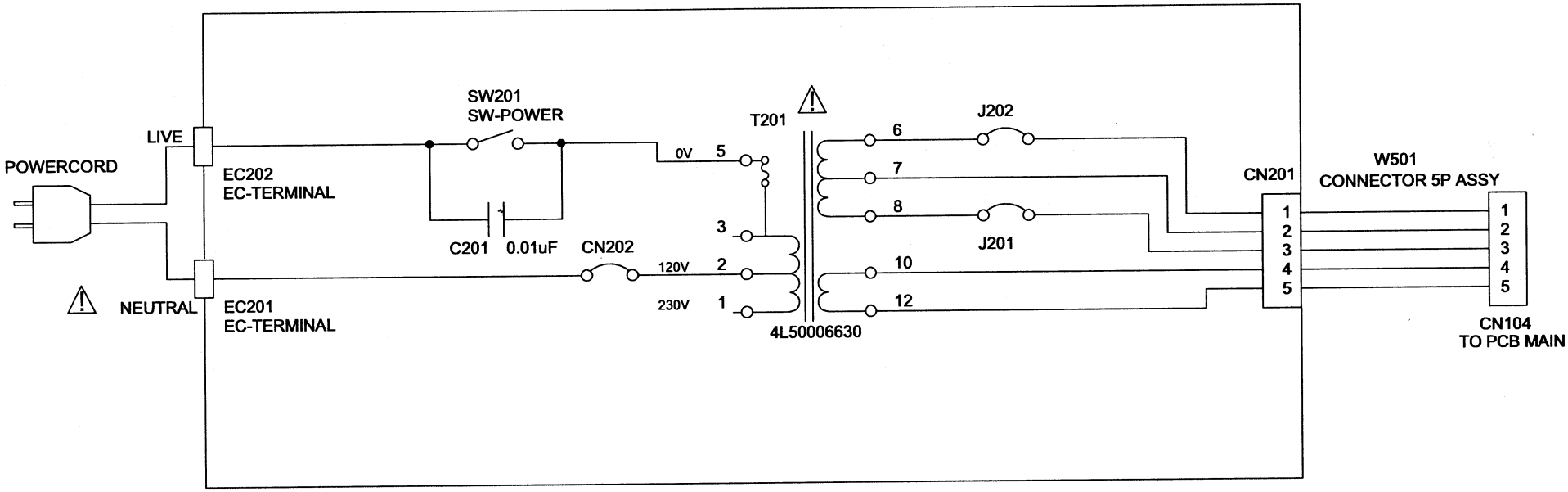

PD-D2410

Compact Disc Changer