SCHEMATIC DIAGRAMS

V-530X/V-430X

INSTRUCTIONS FOR SERVICE PERSONNEL

BEFORE RETURNING APPLIANCE TO THE CUSTOMER, MAKE LEAKAGE-CURRENT OR RESISTANCE MEASUREMENTS TO DETERMINE THAT EXPOSED PARTS ARE ACCEPTABLY INSULATED FROM THE SUPPLY CIRCUIT.

NOTES

1. Resistor values are in ohms (k = kilo-ohms, M = meg-ohms).
2. Capacitor values are in microfarads (p = picofarads).
3. Voltage and signal level values are for reference only.
   0 dB = 0.775V
4. ▭ : Front panel indication
5. ⬚ : Rear panel indication
6. ——— :. +B power supply circuit
7. ⚠ Parts marked with this sign are safety critical components. They must always be replaced with identical components-refer to the appropriate parts list and ensure exact replacement.

注意

1. 抵抗の単位はΩ(k＝kΩ，M＝MΩ)です。
2. コンデンサの単位はμF(p＝pF)です。
3. 電圧及び信号レベルは参考値です。
   0dB＝0.775V
4. ▭ ：フロント・パネル上の表示
5. ⬚ ：リア・パネル上の表示
6. ——— ：＋B電源回路
7. ⚠マークのある部品は安全重要部品です。
   交換するときは必ずティアック指定の部品を使用してください。

www.hifiengine.com

TEAC SCHEMATIC DIAGRAM (Amplifier Section) V-430X

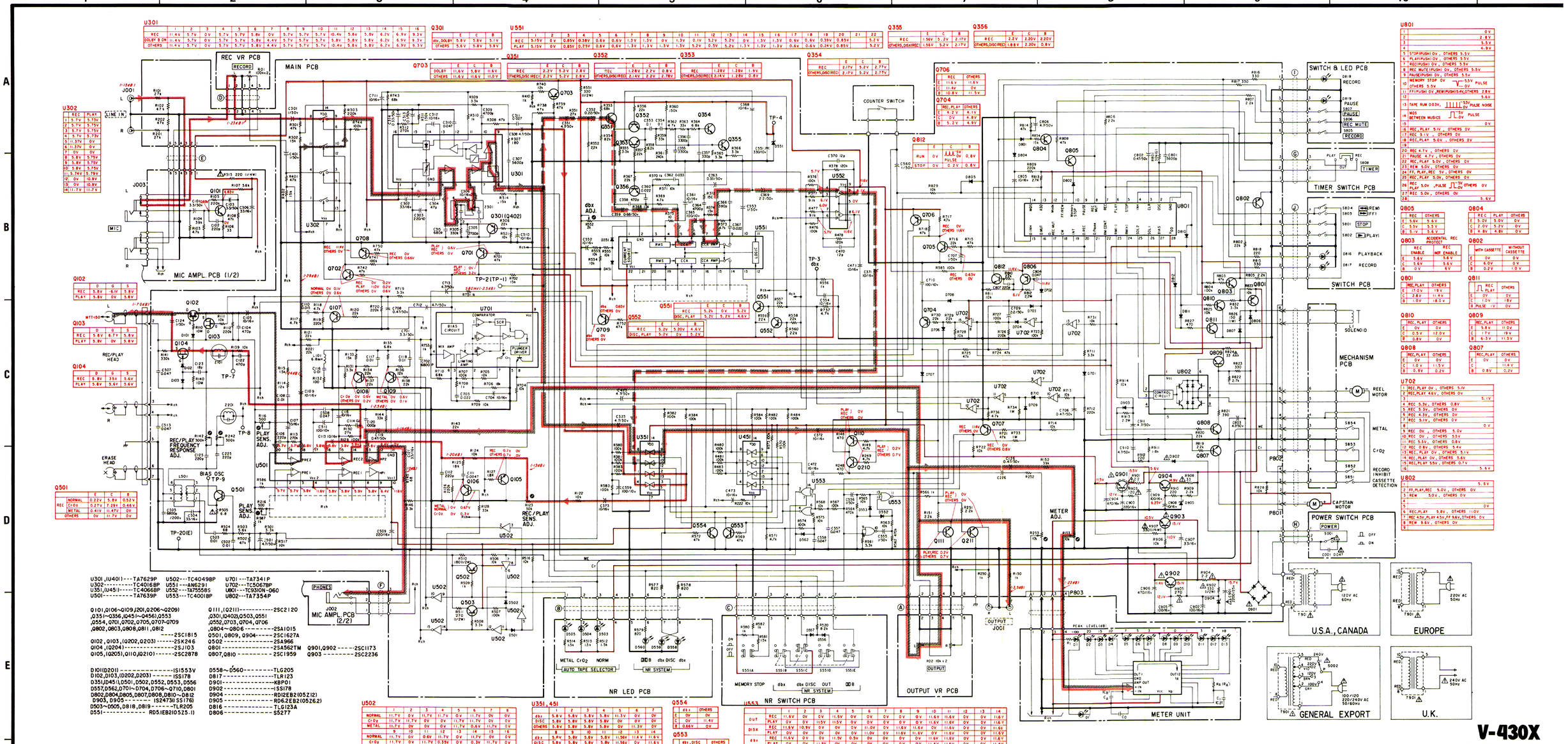

U301,(U401)---TA7629P
U302---------TC4016BP
U351,(U451)----TC4066BP
U501---------TA7639P
U502---TC4049BP
U551---AN6291
U552---TA75558S
U553---TC4001BP
U701---TA7341P
U702---TC5067BP
U801---TC9310N-060
U802---TA7354P

Q101,Q106~Q109,Q201,Q206~Q209)
,Q351~Q356,Q451~Q456),Q553
,Q554,Q701,Q702,Q705,Q707~Q709
,Q802,Q803,Q808,Q811,Q812
-----2SC1815
Q102,Q103,(Q202,Q203)------2SK246
Q104,(Q204)----------2SJ103
Q105,(Q205),Q110,Q210)------2SC2878

Q111,(Q211)---------2SC2120
,Q301,Q402,Q503,Q551)
,Q552,Q703,Q704,Q706
,Q804~Q806---------2SA1015
Q501,Q809,Q904------2SC1627A
Q502----------2SA966
Q801----------2SA562TM
Q807,Q810---------2SC1959
Q901,Q902-----2SC1173
Q903---------2SC2236

D101(D201)----------IS1553V
D102,D103,(D202,D203)------ISS178
D351,(D451),D501,D502,D552,D553,D556
D557,D562,D701~D704,D706~D710,D801
D802,D804,D805,D807,D808,D810~D812
D903,D905--------IS2473II(SS176)
D503~D505,D818,D819----------RD20
D551----------RD51EB2105Z5.1)
D558~D560--------TLG205
D817----------TLR123
D901----------KBP01
D902----------SS178
D904----------RD12EB2105Z12)
D905----------RD62EB2105Z6.2)
D816----------TLG123A
D806----------S5277

V-430X
Amplifier/Control
2nd Edition: September, 1984

TEAC SCHEMATIC DIAGRAM (Control Section) V-530X

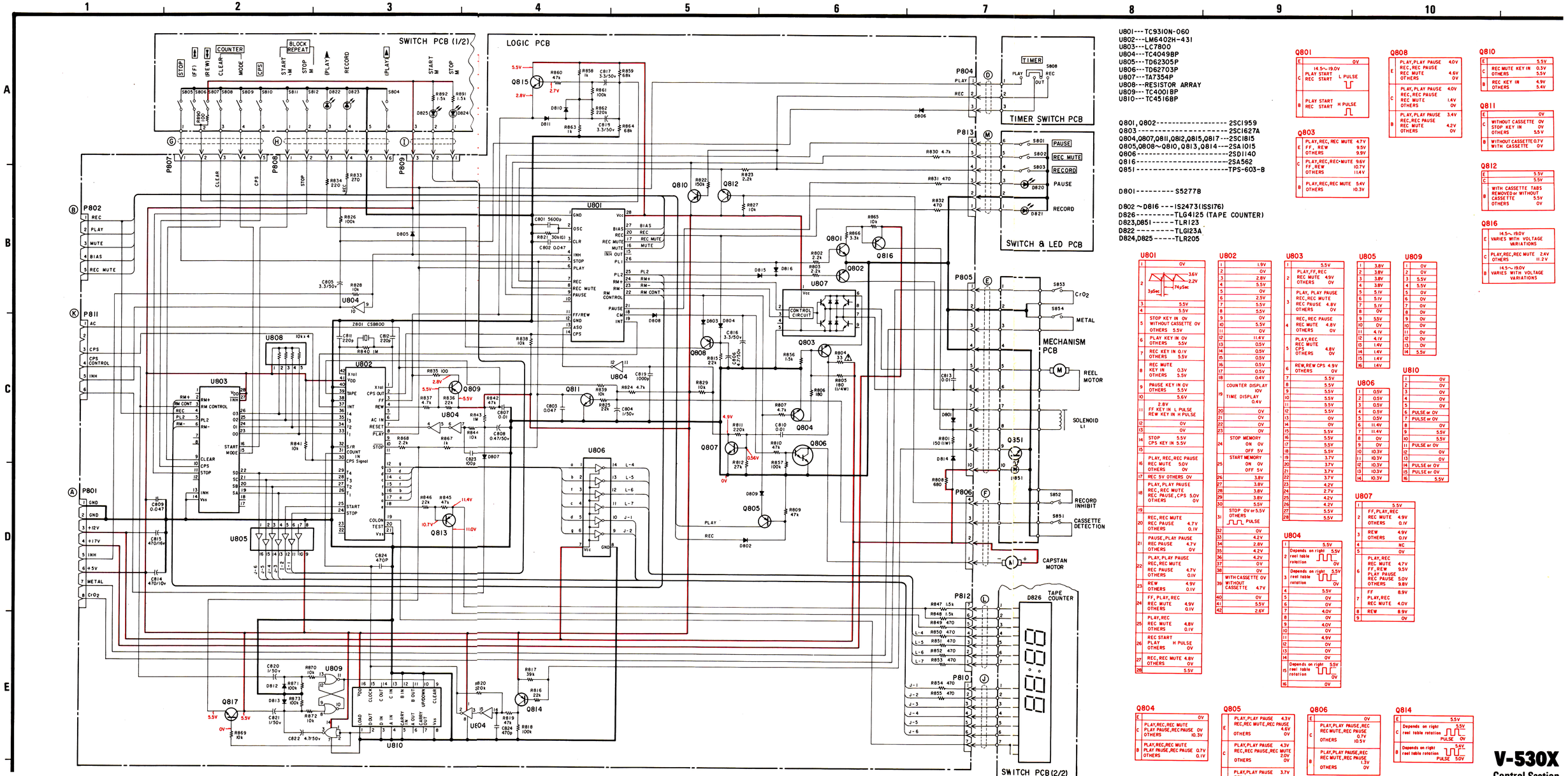

U801---TC9310N-060
U802---LM6402H-431
U803---LC7800
U804---TC4049BP
U805---TD62305P
U806---TD62703P
U807---TA7354P
U808--RESISTOR ARRAY
U809---TC4001BP
U810---TC4516BP

Q801,Q802----------2SC1959
Q803----------2SC1627A
Q804,Q807,Q811,Q812,Q815,Q817---2SC1815
Q805,Q808~Q810,Q813,Q814---2SA1015
Q806----------2SD1140
Q816----------2SA562
Q851----------TPS-603-B

D801---------S52778

D802~D816---IS2473(ISSI76)
D826---------TLG4125 (TAPE COUNTER)
D823,D851-----TLR123
D822---------TLG123A
D824,D825-----TLR205

Q801

E		0V
C	14.5~19.0V PLAY START REC START	L PULSE
B	PLAY START REC START	H PULSE

Q803

E	PLAY,REC, REC MUTE	4.7V
	FF , REW	9.5V
	OTHERS	9.9V
C	PLAY,REC,REC•MUTE	9.6V
	FF ,REW	10.7V
	OTHERS	11.4V
B	PLAY,REC,REC MUTE	5.4V
	OTHERS	10.3V

Q808

E	PLAY,PLAY PAUSE	4.0V
	REC, REC PAUSE	
	REC MUTE	4.6V
	OTHERS	0V
C	PLAY, PLAY PAUSE	4.0V
	REC, REC PAUSE	
	REC MUTE	1.4V
	OTHERS	0V
B	PLAY, PLAY PAUSE	3.4V
	REC, REC PAUSE	
	REC MUTE	4.2V
	OTHERS	0V

Q810

E		5.5V
C	REC MUTE KEY IN	0.3V
	OTHERS	5.5V
B	REC KEY IN	4.9V
	OTHERS	5.4V

Q811

E		0V
C	WITHOUT CASSETTE	0V
	STOP KEY IN	0V
	OTHERS	5.5V
B	WITHOUT CASSETTE	0.7V
	WITH CASSETTE	0V

Q812

E		5.5V
C		5.5V
B	WITH CASSETTE TABS REMOVED or WITHOUT CASSETTE	5.5V
	OTHERS	0V

Q816

E	14.5~19.0V VARIES WITH VOLTAGE VARIATIONS	
C	PLAY,REC,REC MUTE	2.4V
	OTHERS	11.2V
B	14.5~19.0V VARIES WITH VOLTAGE VARIATIONS	

U801

1		0V
2	3μ5sec / 74μ5sec	3.6V / 2.2V
3		5.5V
4		5.5V
5	STOP KEY IN	0V
	WITHOUT CASSETTE	0V
	OTHERS	5.5V
6	PLAY KEY IN 0V	
	OTHERS	5.5V
7	REC KEY IN	0.1V
	OTHERS	5.5V
8	REC MUTE KEY IN	0.3V
	OTHERS	5.5V
9	PAUSE KEY IN	0V
	OTHERS	5.5V
10		5.6V
11	2.8V FF KEY IN L PULSE REW KEY IN H PULSE	
12		0V
13		0V
14	STOP	5.5V
	CPS KEY IN	5.5V
15		
16	PLAY, REC, REC PAUSE	
	REC MUTE	5.0V
	OTHERS	0V
17	REC 5V OTHERS 0V	
18	PLAY, PLAY PAUSE REC , REC MUTE REC PAUSE,CPS	5.0V
	OTHERS	0V
19		
20	REC, REC MUTE REC PAUSE	4.7V
	OTHERS	0.1V
21	PAUSE,PLAY PAUSE REC PAUSE	4.7V
	OTHERS	0V
22	PLAY, PLAY PAUSE REC , REC MUTE REC PAUSE	4.7V
	OTHERS	0.1V
23	REW	4.9V
	OTHERS	0.1V
24	FF, PLAY, REC REC MUTE	4.9V
	OTHERS	0.1V
25	PLAY,REC REC MUTE	4.8V
	OTHERS	0.1V
26	REC START PLAY	H PULSE
	OTHERS	0V
27	REC, REC MUTE	4.8V
	OTHERS	0V
28		5.5V

U802

1		1.9V
2		0V
3		2.8V
4		5.5V
5		0V
6		2.5V
7		5.5V
8		5.5V
9		0V
10		5.5V
11		0V
12		11.4V
13		0.5V
14		0.5V
15		0.5V
16		0.5V
17		0.5V
18		0.4V
19	COUNTER DISPLAY	10V
	TIME DISPLAY	0.4V
20		0V
21		0V
22		0V
23		0V
24	STOP MEMORY	ON 0V
		OFF 5V
25	START MEMORY	ON 0V
		OFF 5V
26		3.8V
27		3.8V
28		3.8V
29		3.8V
30		5.5V
31	STOP 0V or 5.5V OTHERS	PULSE
32		0V
33		4.2V
34		2.8V
35		4.2V
36		4.2V
37		0V
38		0V
39	WITH CASSETTE WITHOUT CASSETTE	0V / 4.7V
40		0V
41		5.5V
42		2.6V

U803

1		5.5V
2	PLAY,FF,REC REC MUTE	4.9V
	OTHERS	0V
3	PLAY, PLAY PAUSE REC , REC MUTE REC PAUSE	4.8V
	OTHERS	0V
4	REC, REC PAUSE REC MUTE	4.8V
	OTHERS	0V
5	PLAY,REC REC MUTE CPS	4.8V
	OTHERS	0V
6	REW,REW CPS	4.9V
	OTHERS	0V
7		5.5V
8		5.5V
9		5.5V
10		5.5V
11		5.5V
12		5.5V
13		0V
14		0V
15		5.5V
16		5.5V
17		5.5V
18		5.5V
19		3.7V
20		3.7V
21		3.7V
22		3.7V
23		4.2V
24		2.7V
25		4.2V
26		4.2V
27		5.5V
28		5.5V

U804

1		5.5V
2	Depends on right reel table rotation	5.5V / 0V
3	Depends on right reel table rotation	5.5V / 0V
4		5.5V
5		0V
6		0V
7		4.0V
8		0V
9		4.0V
10		0V
11		4.9V
12		0V
13		0V
14		0V
15	Depends on right reel table rotation	5.5V / 0V
16		0V

U805

1		3.8V
2		3.8V
3		3.8V
4		3.8V
5		5.1V
6		5.1V
7		5.1V
8		0V
9		5.5V
10		0V
11		4.1V
12		4.1V
13		1.4V
14		1.4V
15		1.4V
16		1.4V

U806

1		0.5V
2		0.5V
3		0.5V
4		0.5V
5		0.5V
6		11.4V
7		11.4V
8		0V
9		0V
10		10.3V
11		10.3V
12		10.3V
13		10.3V
14		10.3V

U807

1		5.5V
2	FF,PLAY,REC REC MUTE	4.9V
	OTHERS	0.1V
3	REW	4.9V
	OTHERS	0.1V
4	NC	
5		0V
6	PLAY,REC REC MUTE	4.7V
	FF,REW	9.5V
	PLAY PAUSE REC PAUSE	5.0V
	OTHERS	9.8V
7	FF PLAY,REC REC MUTE	8.9V / 4.0V
8	REW	8.9V
9		0V

U809

1		0V
2		0V
3		5.5V
4		5.5V
5		0V
6		0V
7		0V
8		0V
9		0V
10		0V
11		0V
12		0V
13		0V
14		5.5V

U810

1		0V
2		0V
3		0V
4		0V
5		0V
6	PULSE or	0V
7	PULSE or	0V
8		0V
9		5.5V
10	PULSE or	0V
11		0V
12	PULSE or	0V
13		0V
14	PULSE or	0V
15	PULSE or	0V
16		5.5V

Q804

E		0V
C	PLAY,REC,REC MUTE PLAY PAUSE,REC PAUSE	0V
	OTHERS	10.3V
B	PLAY,REC,REC MUTE PLAY PAUSE,REC PAUSE	0.7V
	OTHERS	0.1V

Q805

E	PLAY,PLAY PAUSE	4.3V
	REC,REC MUTE,REC PAUSE	4.6V
	OTHERS	0V
C	PLAY,PLAY PAUSE	4.3V
	REC,REC PAUSE,REC MUTE	2.0V
	OTHERS	0V
B	PLAY,PLAY PAUSE	3.7V
	REC,REC MUTE REC PAUSE	4.3V
	OTHERS	0V

Q806

E		0V
C	PLAY,PLAY PAUSE,REC REC MUTE,REC PAUSE	0.7V
	OTHERS	10.5V
B	PLAY,PLAY PAUSE,REC REC MUTE,REC PAUSE	1.3V
	OTHERS	0V

Q814

E		5.5V
C	Depends on right reel table rotation	5.5V / PULSE 0V
B	Depends on right reel table rotation	5.4V / PULSE 5.0V

V-530X
Control Section

2nd Edition: September 1984

TEAC SCHEMATIC DIAGRAM (Amplifier Section) V-530X

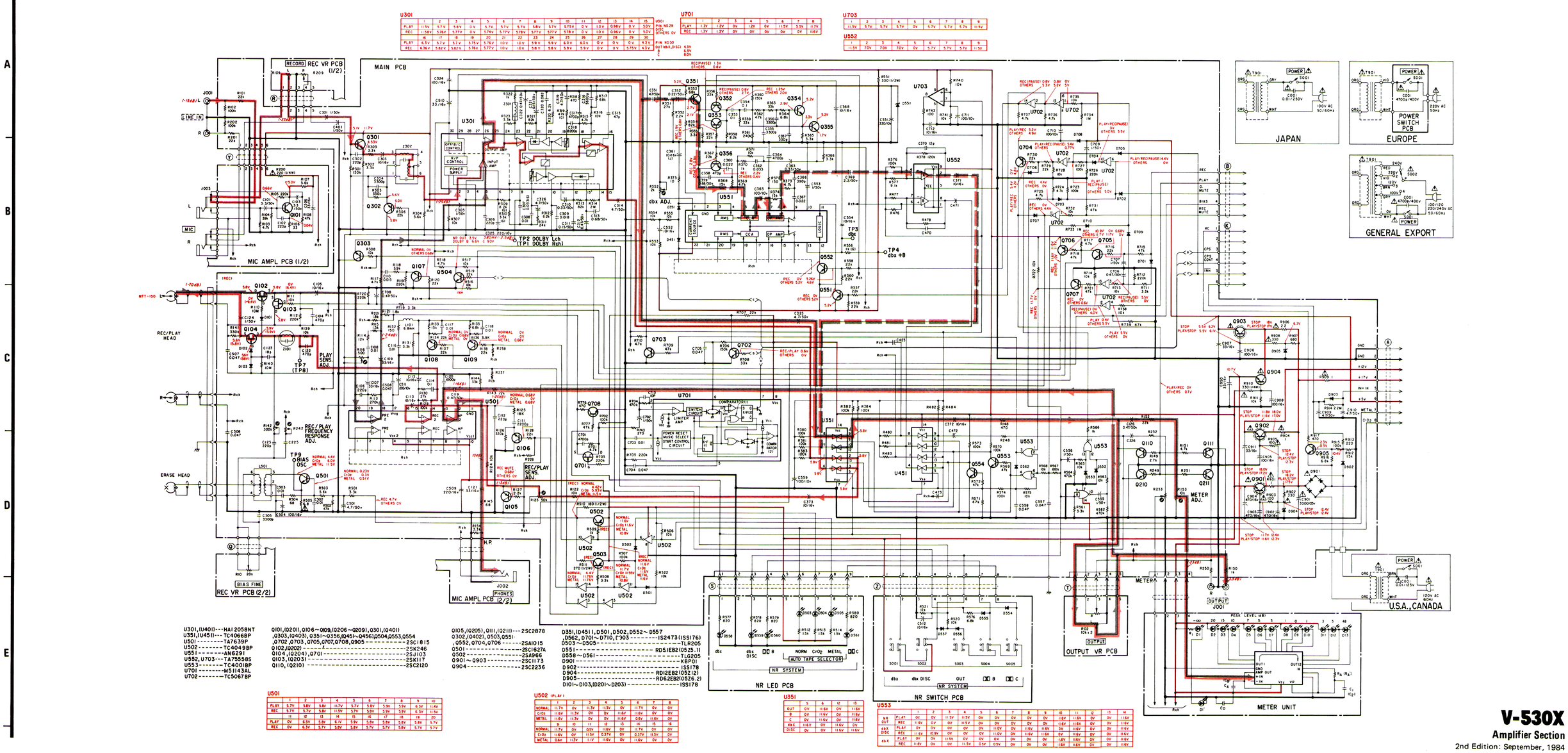

U301, (U401) --- HAI 2058NT
U351, (U451) --- TC4066BP
U501 ------- TA7639P
U502 ------- TC4049BP
U551 ------- AN6291
U552, U703 --- TA7555BS
U553 ------- TC4001BP
U701 ------- M51143AL
U702 ------- TC5067BP

Q101, (Q201), Q106 ~ Q109, (Q206 ~ Q209), Q301, (Q401), Q303, (Q403), Q351 ~ Q356, (Q451 ~ Q456), Q504, Q553, Q554, Q702, Q703, Q705, Q707, Q708, Q905 ---------- 2SC1815
Q102, (Q202) ---------- 2SK246
Q104, (Q204), Q701 ---------- 2SJ103
Q103, (Q203) ---------- 2SK117
Q110, (Q210) ---------- 2SC2120

Q105, (Q205), Q111, (Q211) --- 2SC2878
Q302, (Q402), Q503, Q551, Q552, Q704, Q706 ---------- 2SA1015
Q501 ---------- 2SC1627A
Q502 ---------- 2SA966
Q901 ~ Q903 ---------- 2SC1173
Q904 ---------- 2SC2236

D351, (D451), D501, D502, D552 ~ D557, D562, D701 ~ D710, D903 ---------- 1S2473 (1SS176)
D503 ~ D505 ---------- TLR205
D551 ---------- RD5.1EB2 (D525.1)
D558 ~ D561 ---------- TLG205
D901 ---------- XBP01
D902 ---------- 1SS178
D904 ---------- RD12EB2 (D512.2)
D905 ---------- RD6.2EB2 (D526.2)
D101 ~ D103, (D201 ~ D203) ---------- 1SS178

U301

	1	2	3	4	5	6	7	8	9	10	11	12	13	14	15
PLAY	11.5V	5.7V	5.8V	0V	5.7V	5.7V	5.7V	5.8V	5.7V	5.75V	0V	1.0V	0.98V	0V	5.0V
REC	11.58V	5.76V	5.77V	0V	5.74V	5.77V	5.78V	5.77V	5.77V	5.78V	0V	1.0V	0.98V	0V	5.0V

	16	17	18	19	20	21	22	23	24	25	26	27	28	29	30
PLAY	6.7V	5.7V	5.7V	5.75V	5.75V	10V	10V	5.8V	5.8V	6.0V	6.0V	0V	0V	0V	4.3V
REC	6.36V	5.82V	5.82V	5.76V	5.77V	10V	10V	5.8V	5.8V	5.9V	5.9V	0V	5.75V	4.3V	

P/N NO.29 OUT (6V, DISC) 4.3V 5.3V 8.0V

U701

	1	2	3	4	5	6	7	8
PLAY	1.3V	1.2V	0V	1.2V	0V	11.5V	5.5V	11.7V
REC	1.3V	1.3V	0V	0V	0V	0V	0V	11.6V

U703

1	2	3	4	5	6	7	8	9
11.5V	5.7V	5.7V	5.7V	0V	5.7V	5.7V	5.7V	11.5V

U552

1	2	3	4	5	6	7	8	9
11.5V	7.0V	7.0V	7.0V	0V	5.7V	5.7V	5.7V	11.5V

U501

	1	2	3	4	5	6	7	8	9	10
PLAY	5.7V	5.8V	5.8V	11.7V	5.7V	5.8V	5.9V	5.9V	6.3V	11.6V
REC	5.7V	5.7V	5.8V	11.5V	5.7V	5.8V	5.9V	5.9V	6.3V	11.5V

	11	12	13	14	15	16	17	18	19	20
PLAY	0V	6.3V	5.8V	6.1V	5.9V	5.8V	5.8V	5.8V	5.8V	5.7V
REC	0V	6.3V	5.7V	5.8V	5.8V	5.7V	5.7V	5.8V	5.7V	5.7V

U502 (PLAY)

	1	2	3	4	5	6	7	8
NORMAL	11.7V	0V	11.3V	11.3V	0V	11.7V	0V	0V
CrO2	11.6V	11.3V	0V	0V	11.6V	11.6V	0V	0V
METAL	11.6V	11.3V	0V	0V	11.6V	0.6V	11.6V	0V

	9	10	11	12	13	14	15	16
NORMAL	11.7V	0V	0.5V	11.6V	0V	11.7V	0V	0V
CrO2	11.6V	0V	11.5V	0.37V	0V	0.37V	11.3V	0V
METAL	0.6V	11.3V	11.6V	0V	11.6V	0V	11.6V	0V

U351

	5	6	12	13
OUT	0V	11.6V	0V	11.6V
B	0V	11.6V	0V	11.6V
C	0V	11.6V	0V	11.6V
4X5 DISC	11.6V	0V	11.6V	0V
	0V	0V	11.6V	11.6V

U553

		1	2	3	4	5	6	7	8	9	10	11	12	13	14
NR OUT	PLAY	0V	0V	11.5V	11.5V	0V	0V	0V	0V	0V	1.6V	11.6V	0V	0V	11.6V
	REC	11.6V	0V	0V	11.5V	0V	0V	0V	0V	0V	11.6V	11.6V	0V	0V	11.6V
4X5 DISC	PLAY	0V	0V	0V	0V	11.0V	0V	11.6V	11.6V	0V	11.6V	0V	0V	11.6V	0V
	PLAY	11.6V	0.9V	0V	0V	11.0V	0V	11.6V	11.6V	0V	11.6V	0V	0V	11.6V	0V
6X5	PLAY	0V	0V	11.5V	0V	0V	0V	0V	0V	1.6V	11.6V	0V	0V	11.6V	0V
	REC	11.6V	0V	0V	11.5V	0.5V	0.5V	0V	0V	0V	1.6V	11.6V	0V	0V	11.6V

V-530X
Amplifier Section
2nd Edition: September, 1984