TEAC®

SERVICE MANUAL

V-530X/V-430X

Stereo Cassette Deck

Effective: September, 1984

5704022200

www.hifiengine.com

1 SPECIFICATIONS AND SERVICE DATA

仕様及びサービス・データ

Notes:

1. Improvements may result in changes in specifications and service data.
2. 0 dB is referenced to 0.775V in this manual.

注

1．仕様およびサービス・データは改善のため，予告なく変更することがあります。．
2．本マニュアルの0 dBは0.775Vを基準としています．

SPECIFICATIONS

Track system 4-track, 2-channel stereo
Heads 2: Erase, record/playback
Type of tape Standard compact cassette, C-60 and C-90
Tape speed 4.76 cm/s (1-7/8 ips)
Input (level and impedance)
MIC: Minimum input level: –60 dB (775μV)
LINE IN: Specified input level: –8 dB (308mV)/50k ohms
Minimum input level: –18 dB (97.5mV)
Output (level and impedance)
OUTPUT: Specified output level: –3.5 dB (510mV)
50k ohms or more
PHONES: Specified output level: 50mW/8 ohms
Equalization
METAL: 3180μS + 70μS
CrO_2: 3180μS + 70μS
NORMAL: 3180μS + 120μS
Head configuration
1/2-track, 1-channel erase head
1/4-track, 2-channel record and playback head
Motors 1 DC servo capstan motor
1 DC reel motor
Bias frequency 85 kHz
Operation position Horizontal
Power requirements
100/120/220/240V AC, 50/60 Hz (General Export Models)
120V AC, 60 Hz (U.S.A./Canada)
220V AC, 50 Hz (Europe)
240V AC, 50 Hz (U.K./Australia)
100V AC 50/60 Hz (Japan)
Power consumption
V-530X: 23W (Except Japan), 17W (Japan)
V-430X: 18W (Except Japan), 12W (Japan)
Dimensions See Fig. 1-1 on page 3.
Weight 4.3 kg (9-1/2 lbs) net (V-530X)
3.9 kg (8-5/8 lbs) net (V-430X)

CAUTION

⚠ Parts marked with this sign are safety critical components. They must always be replaced with identical components – refer to the appropriate parts list and ensure exact replacement.

注　意

⚠印は安全重要部品です．交換する時は必ずティアック指定の部品を使用してください．

SERVICE DATA

MECHANICAL

Tape speed deviation 3000 Hz ±60 Hz
Tape speed drift 45 Hz
Wow & flutter
Playback: 0.12% (WRMS)
Pinch roller pressure 370 to 530 g (13 oz to 18.7 oz)
Reel Torque
Take-up: 30 to 60 g-cm (0.42 to 0.83 oz-inch)
F.F./REW: Approx. 80 g-cm (1.1 oz-inch)
Fast winding time 95 seconds for MTT-551 (C-60)

ELECTRICAL

Frequency response See Figs. 5-9 to 5-12
Signal-to-noise ratio
Playback: NORMAL: 44 dB min. (Linear)
Overall: METAL, CrO_2: 49 dB min. (IHFA)
NORMAL: 48 dB min. (IHFA)
Erase efficiency 60 dB min, at 1 kHz (measured with input 10 dB higher than the specified input level)
Channel separation 30 dB min. at 1 kHz
Adjacent track crosstalk 60 dB min. at 1 kHz
Third harmonic distortion
2.8% or less with Metal
2.5% or less with CrO_2
2.0% or less with Normal

- Dolby Noise Reduction System manufactured under license from Dolby Laboratories Licensing Corporation.
"Dolby" and the double-D symbol are trademarks of Dolby Laboratories Licensing Corporation.
- dbx Noise Reduction system made under license from dbx, Incorporated. The name "dbx" and the dbx symbol are trademarks of dbx, Incorporated.

- ドルビーノイズリダクションシステムは，ドルビー研究所からの実施権に基づき製造されています．
- ドルビー及び□□は，ドルビー研究所の登録商標です．
- dbxおよびdbxマークはdbxインコーポレーテッドの登録商標です．
- dbxシステムはdbxインコーポレーテッドの実施権に基づいて製造されています．

www.hifiengine.com

2 REMOVAL OF EXTERNAL COMPONENTS

外装部品の外し方

Disassemble in number-order

番号順に外してください

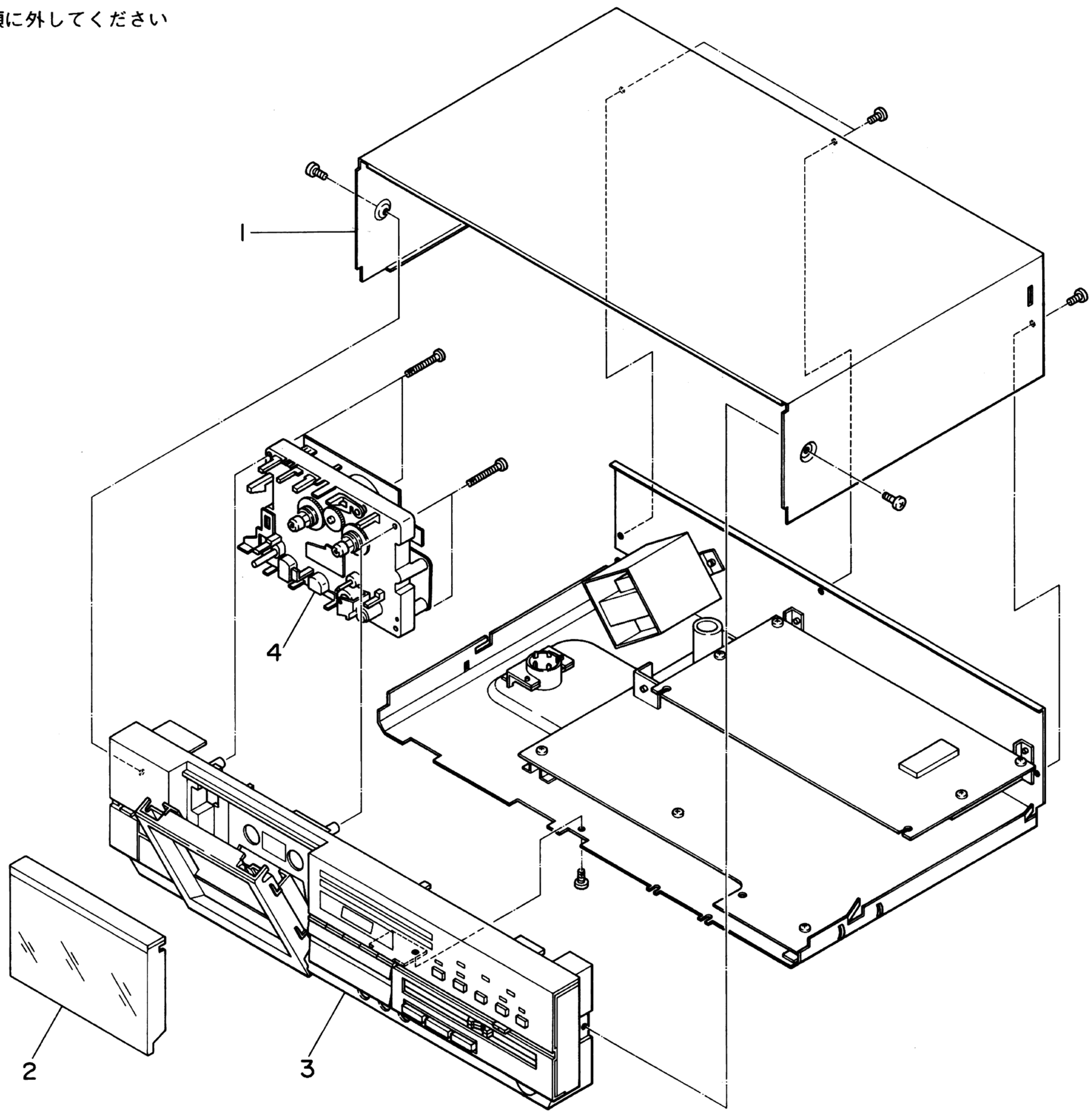

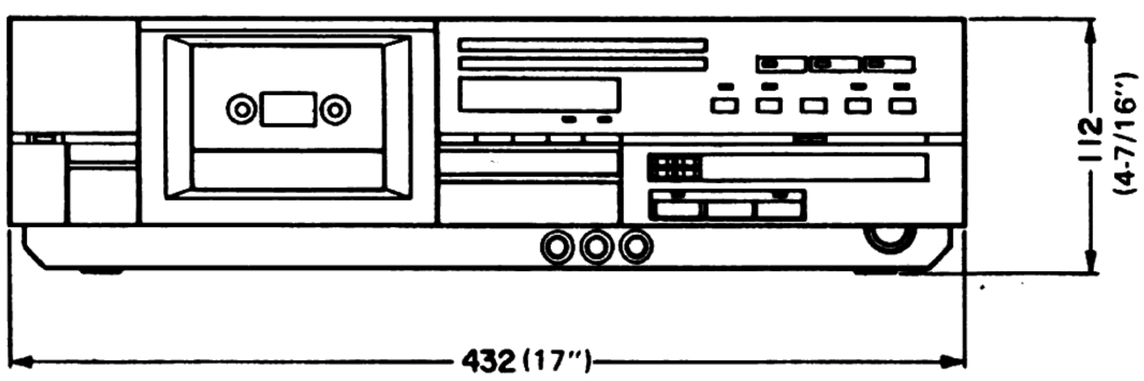

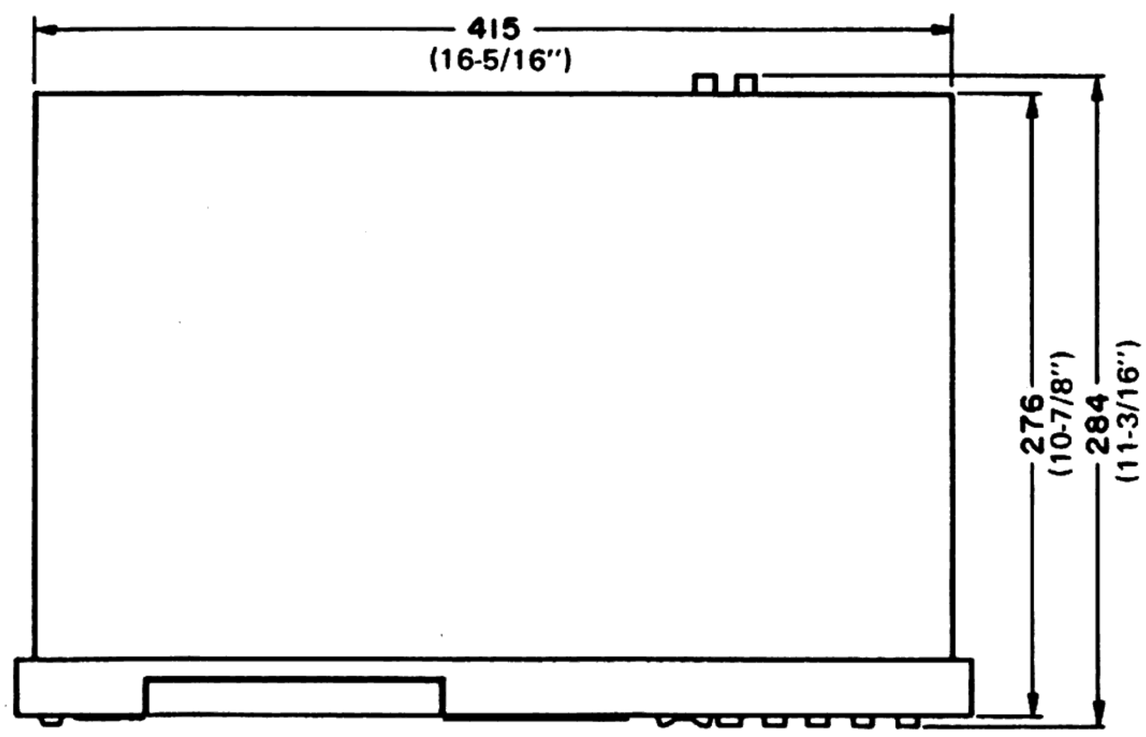

Fig. 1-1

www.hifiengine.com

3 PARTS LOCATION

部品配置図

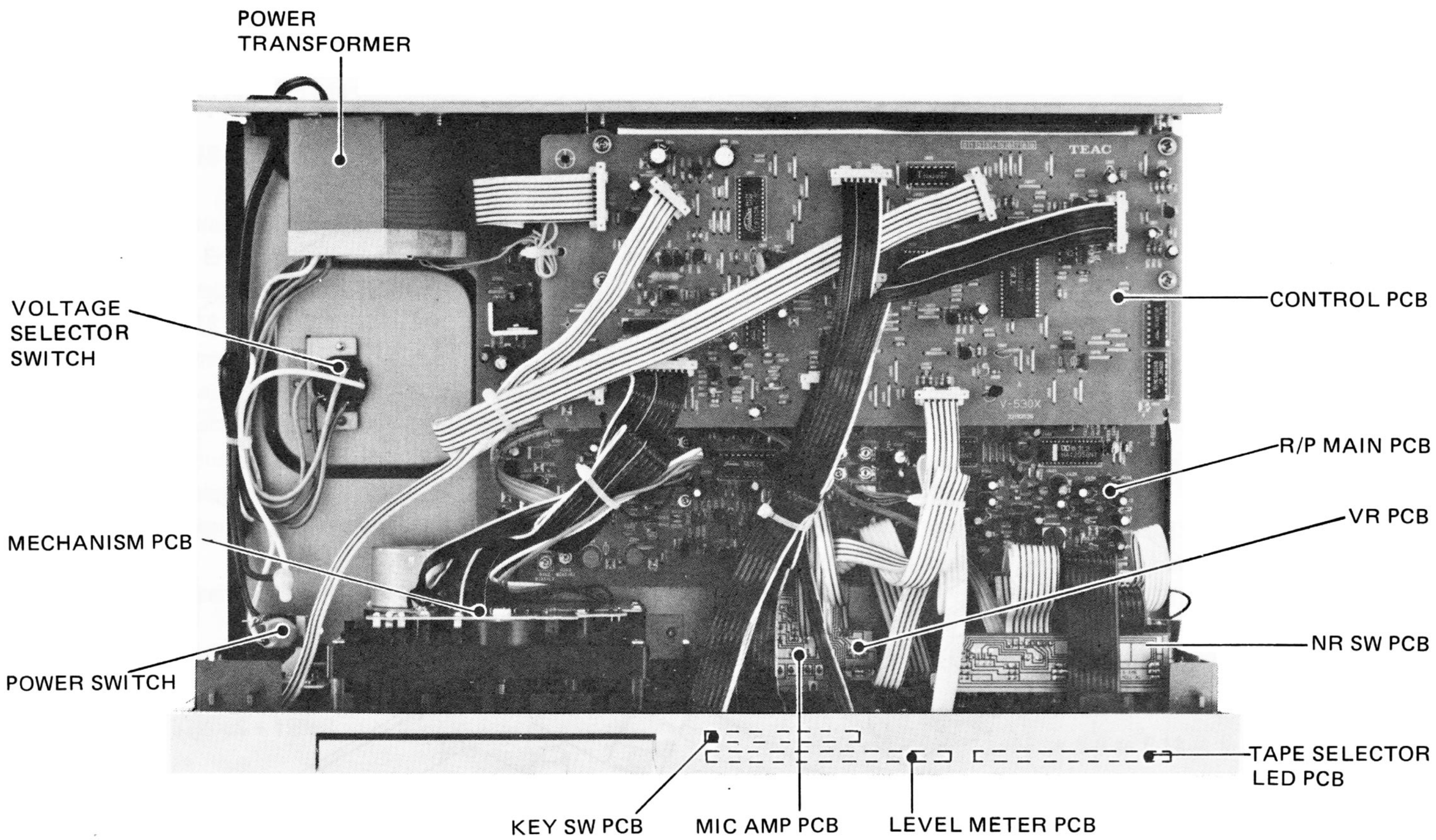

Fig. 3-1 Top view (V-530X) 上面図

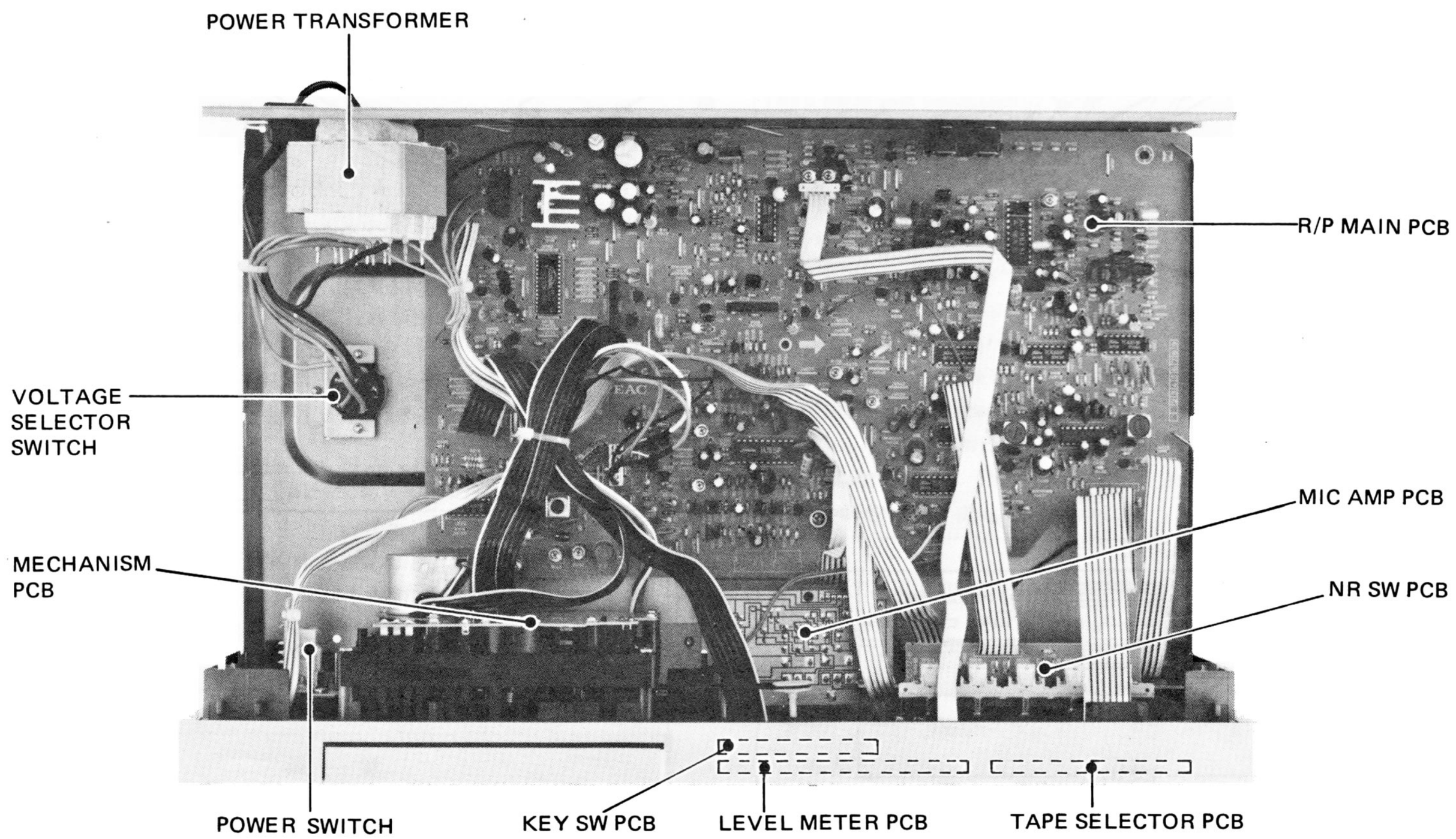

Fig. 3-2 Top view (V-430X) 上面図

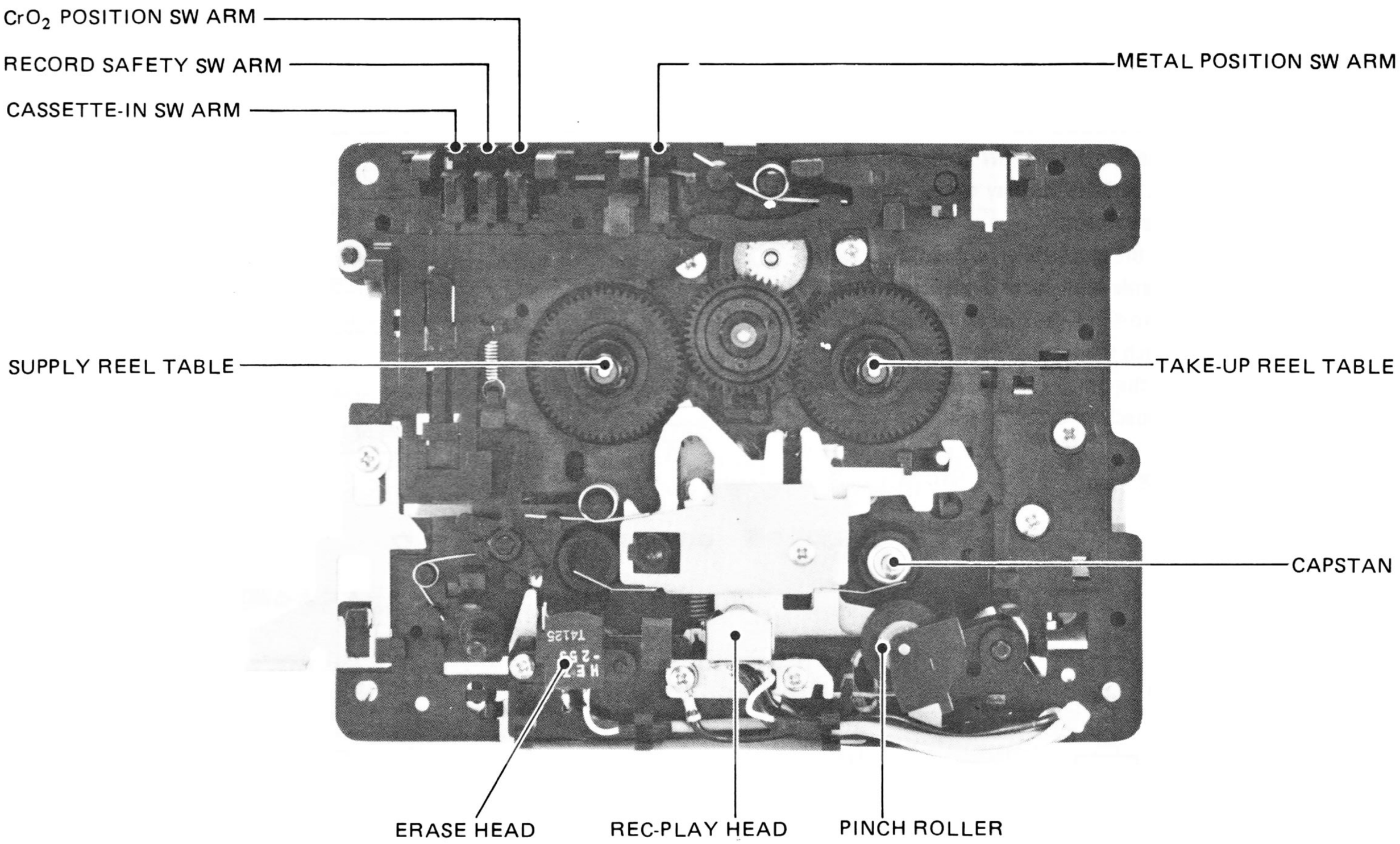

Fig. 3-3 Transport front view (V-530X/V-430X)

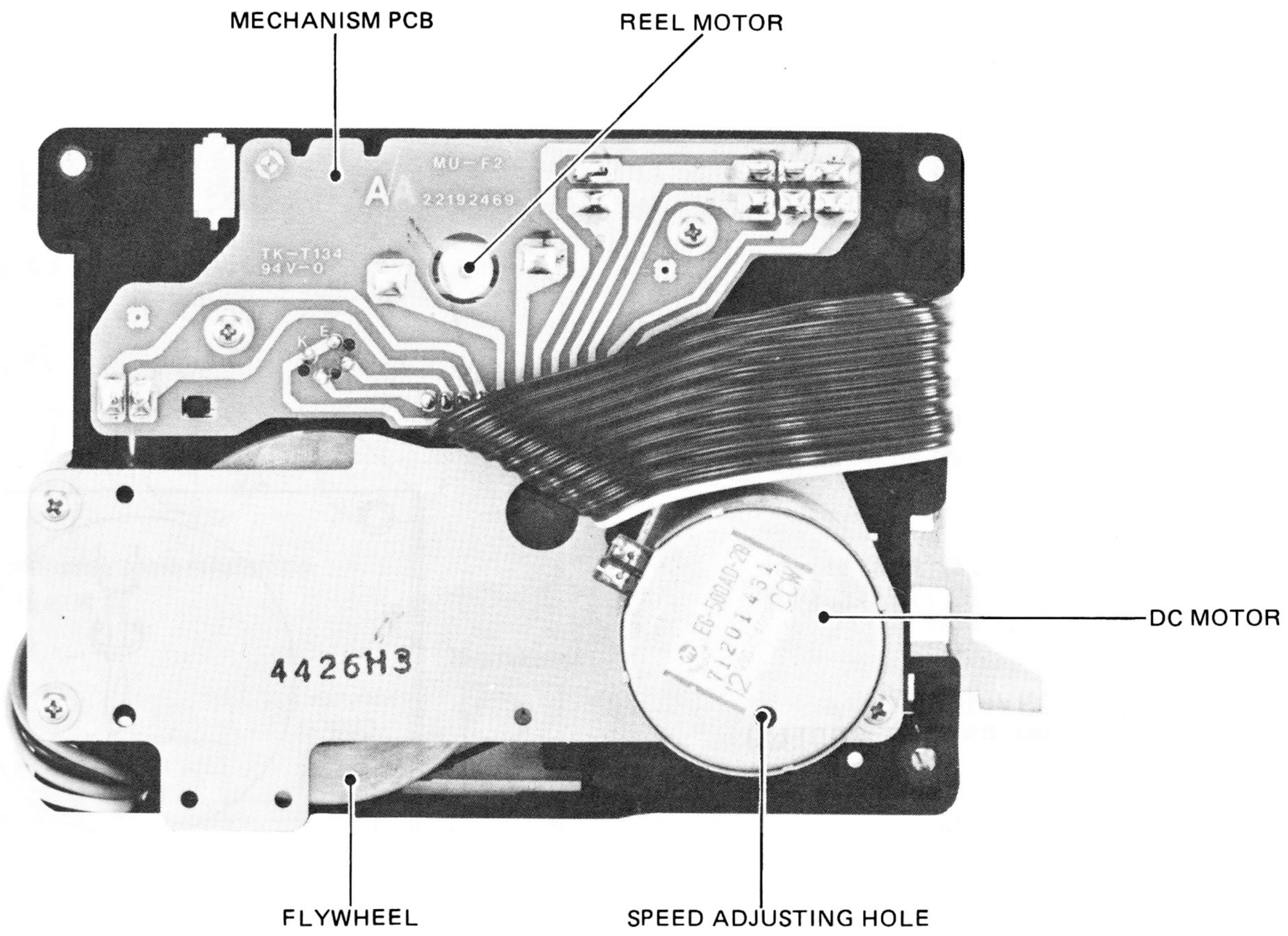

Fig. 3-4 Transport rear view (V-530X/V-430X)

4 MECHANICAL ADJUSTMENTS AND CHECKS

機構部の調整と確認

4-1 PINCH ROLLER PRESSURE

1. While pushing up the cassette-in SW arm with the cassette holder shut (Fig. 3-3), activate the play mode. Keep the SW arm pushed up during measurement.
2. Hook a spring scale to the pinch roller arm as shown below.
3. Pull the scale downwards until there is sufficient force to separate the pinch roller from the capstan shaft, and then allow the pinch roller to just touch the capstan shaft again.
4. Read the scale when the pinch roller just starts to rotate. The readings should be as specified below.

Specifications:
370 ～ 530g (13.1 ～ 18.7 oz)

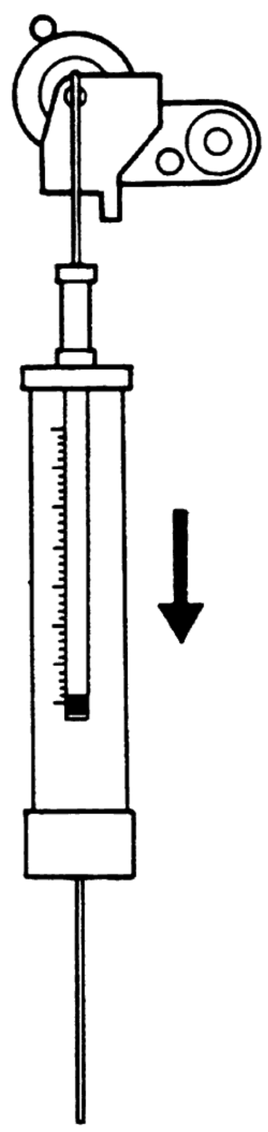

Fig. 4-1

4-1 ピンチ・ローラ圧着力

1．カセット・ホルダを閉じた状態で，カセットイン・スイッチアーム（図3-3）を上方に押して，プレイ・モードにする．測定中，スイッチ アームは上方に押し続けること．
2．ピンチ・ローラ・アームに図4-1のようにバネ秤を掛ける．
3．ピンチ・ローラを回転が止まるまで秤を真下に引張った後，ピンチ・ローラが再びキャプスタン・シャフトに接触するように徐々に戻す．
4．ピンチ・ローラが回りはじめる時の値を読む．
規格値：370 ～ 530g

4-2 REEL TORQUE

1. Load the cassette torque meter on the deck and read the pointer indication on the dial scale for each tape transport operation. The measured torque should be within the following specified values:
   Specifications:
   Take-up: 30 ～ 60 g-cm (0.42 ～ 0.83 oz-inch)
   F.F./REW: Approx. 80 g-cm (2.8 oz-inch)

4-2 リール・トルク

1．カセット型トルク・メータによる測定値が下表の範囲内であることを確認する．
テイクアップ・トルク：30 ～ 60g・cm
早送りトルク：　　約80g・cm

4-3 VOLTAGE CONVERSION (FOR GENERAL EXPORT MODELS)

ALWAYS DISCONNECT THE POWER LINE CORD BEFORE MAKING THESE CHANGES.

1. Locate the voltage selector on the bottom cabinet as shown in the illustration.
2. Using a regular (slot blade) screwdriver, turn the selector so that the desired voltage indication appears.

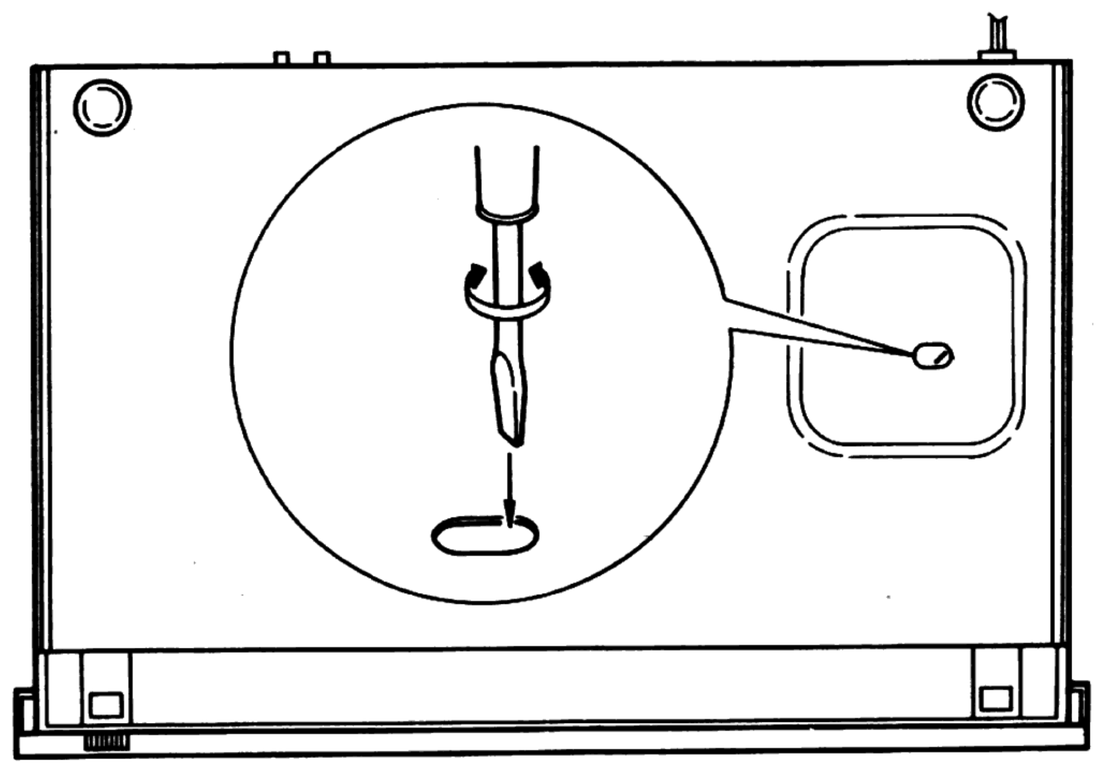

Bottom View

www.hifiengine.com

5 ELECTRICAL CHECKS AND ADJUSTMENTS

アンプ部の確認と調整

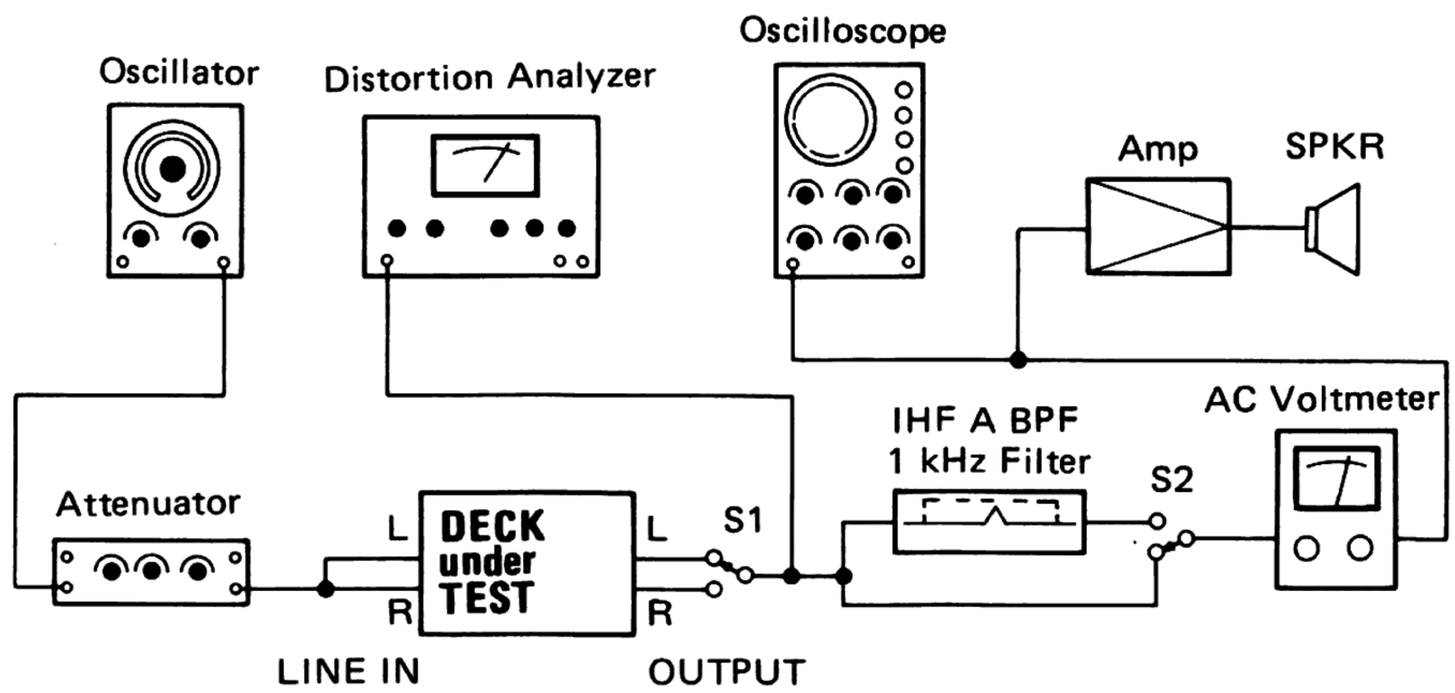

Fig. 5-1 Basic test setup 基本測定接続図

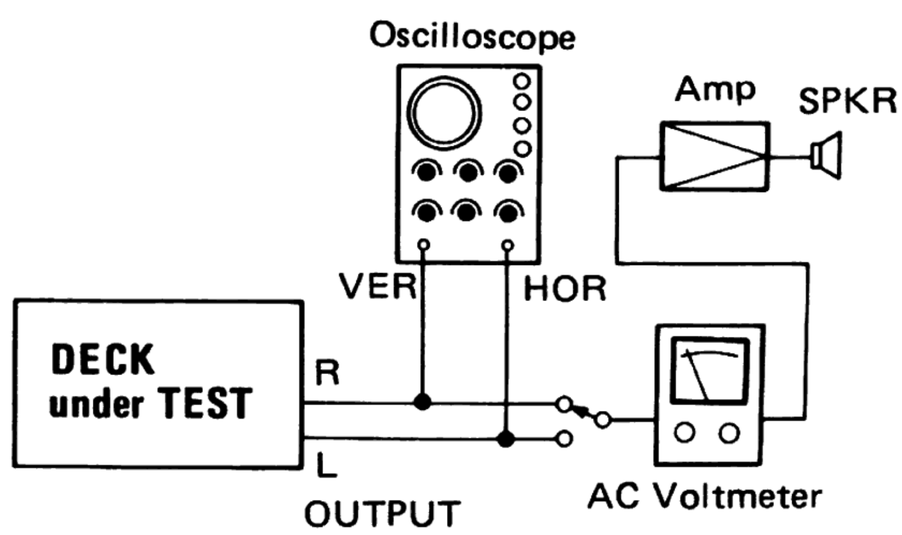

Fig. 5-2 Test setup for azimuth check
位相測定接続図

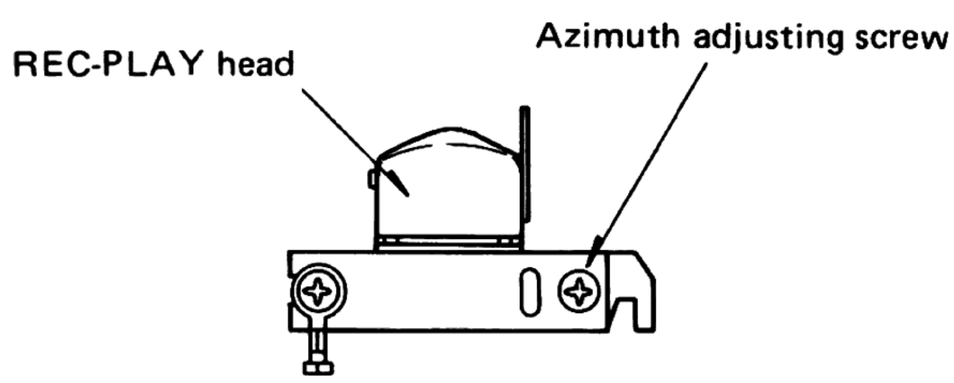

Fig. 5-3 Azimuth screw location
アジマス調整ネジ

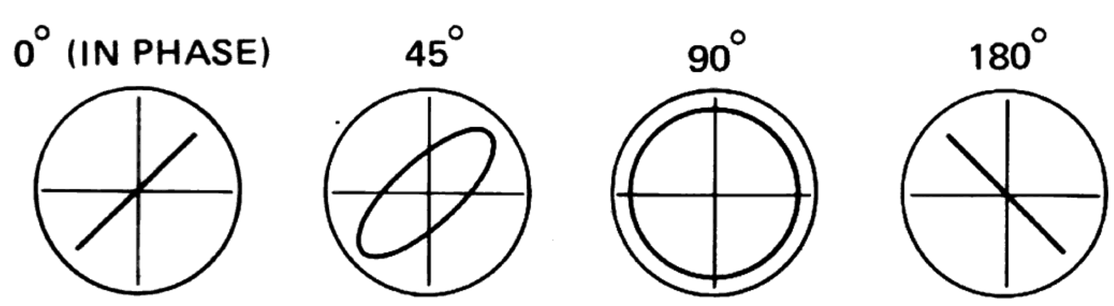

Fig. 5-4 Confirming phase relationship
位相の確認

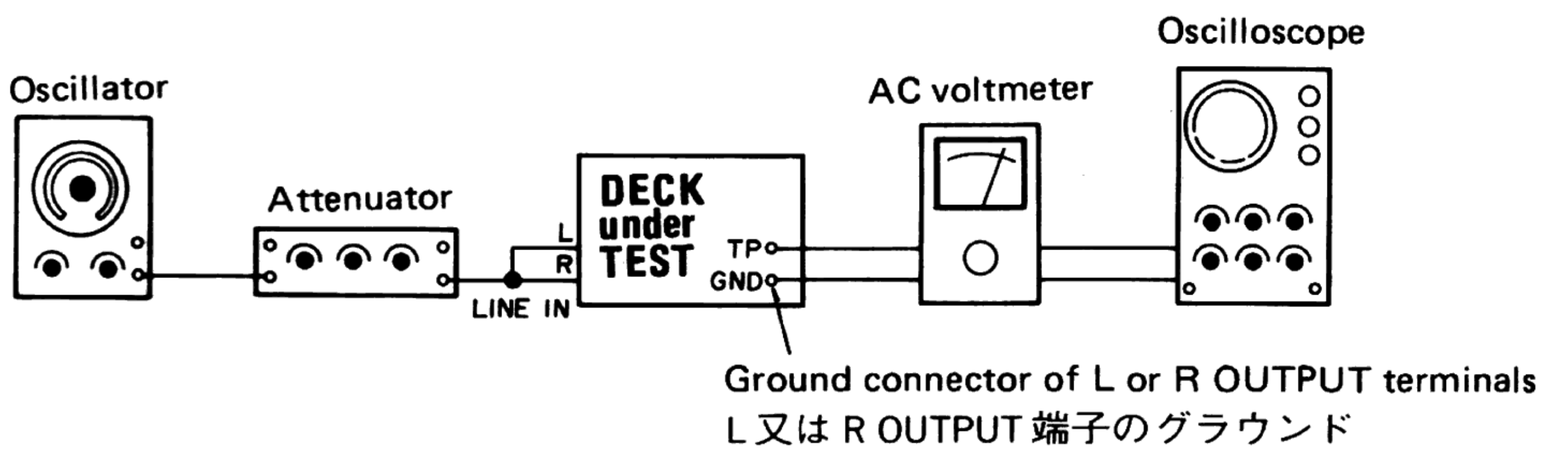

Fig. 5-5 Test setup for items 3 and 6
3及び6項の場合の接続

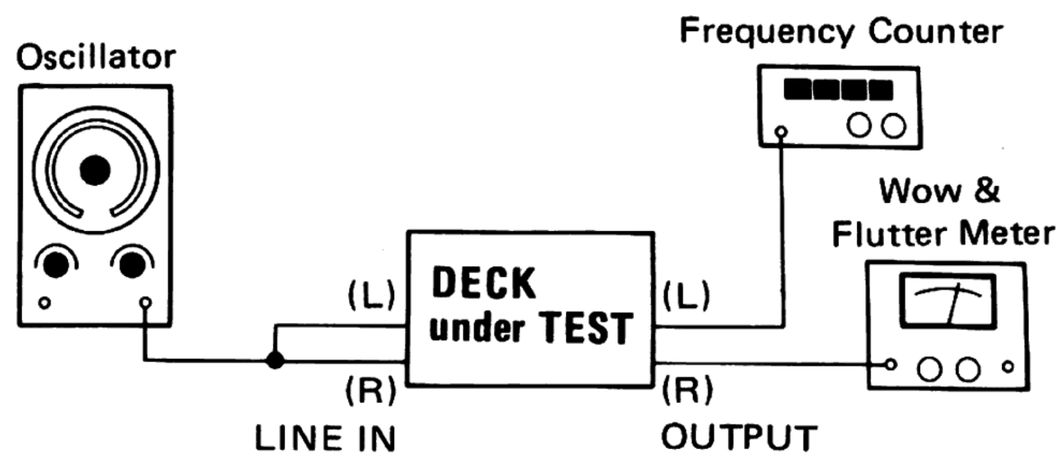

Fig. 5-6 Wow & flutter check
ワウ・フラッタ・チェック

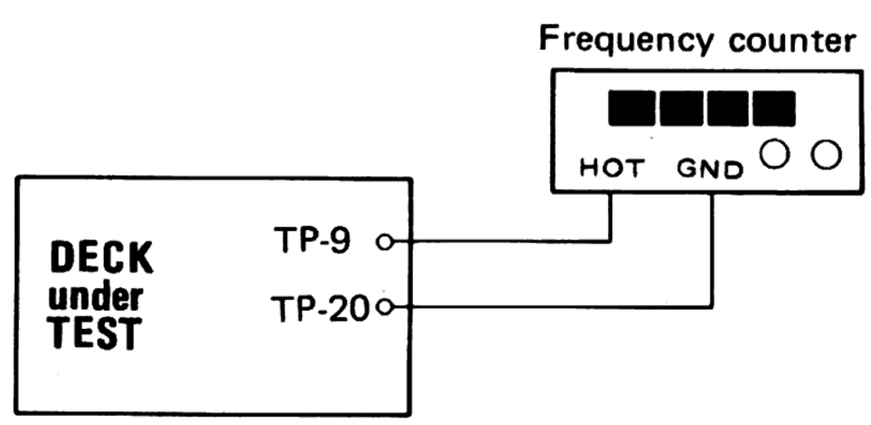

Fig. 5-7 Bias osc. frequency check
バイアス発振周波数チェック

www.hifiengine.com

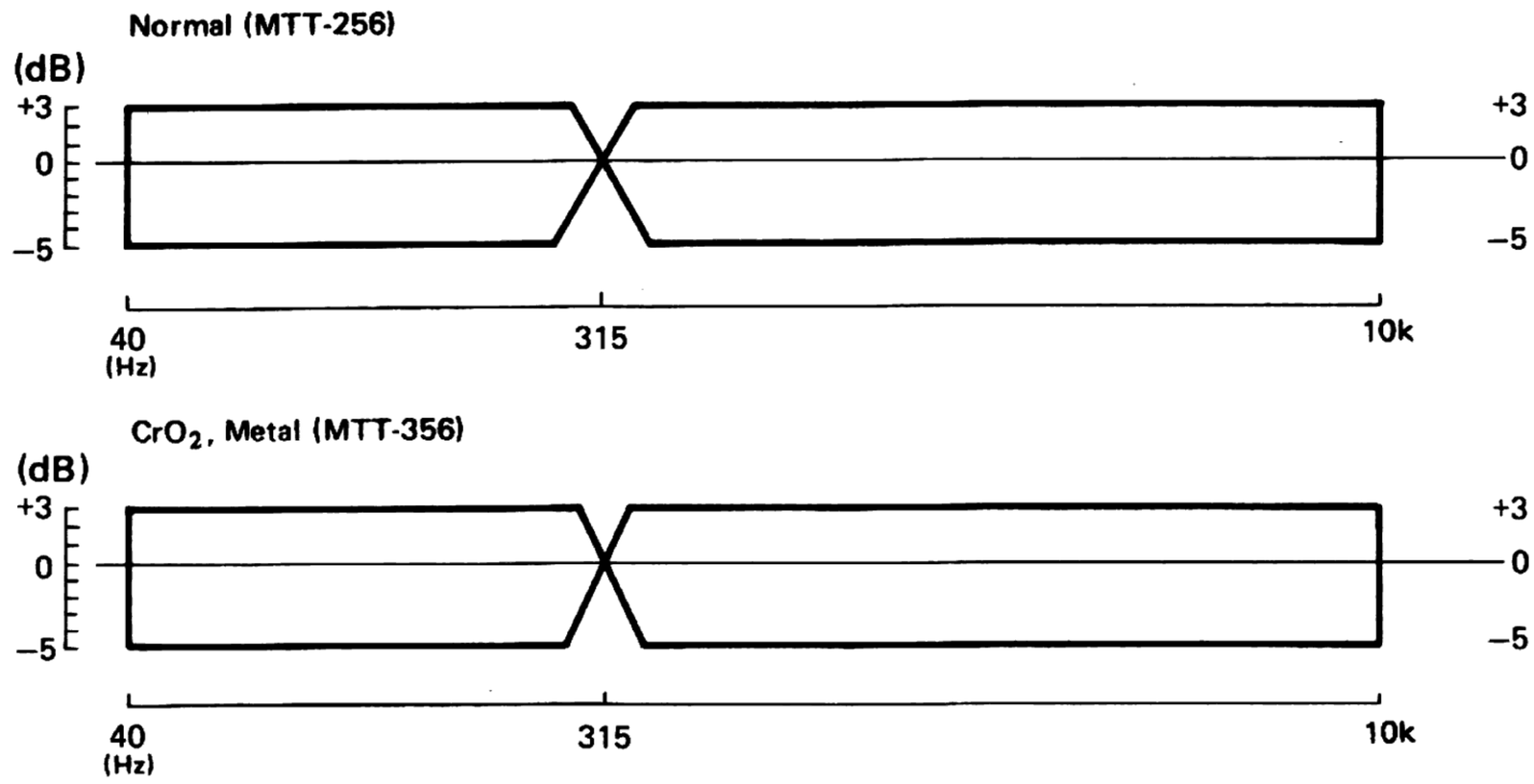

Fig. 5-11 Playback frequency response

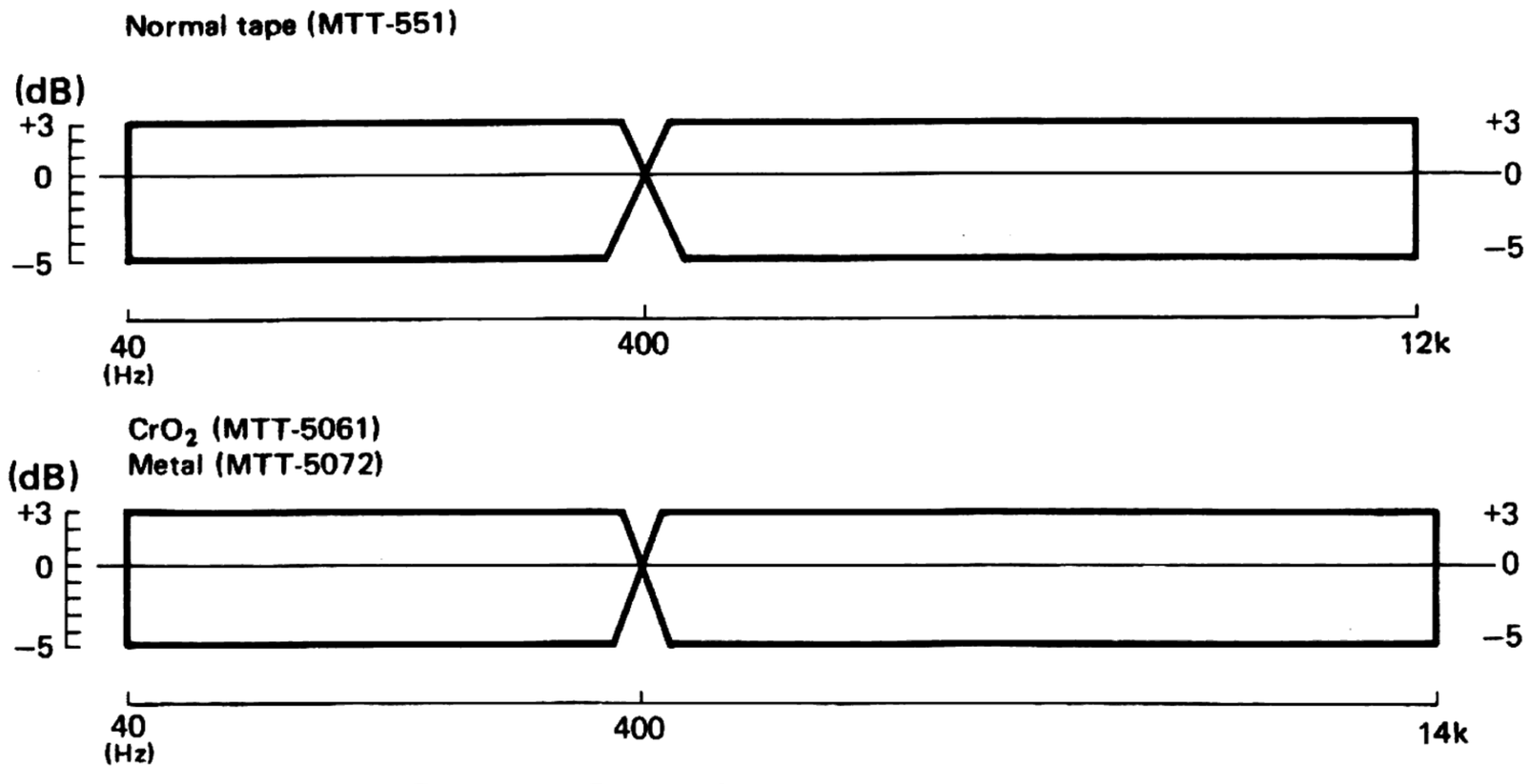

Fig. 5-12 Overall frequency response

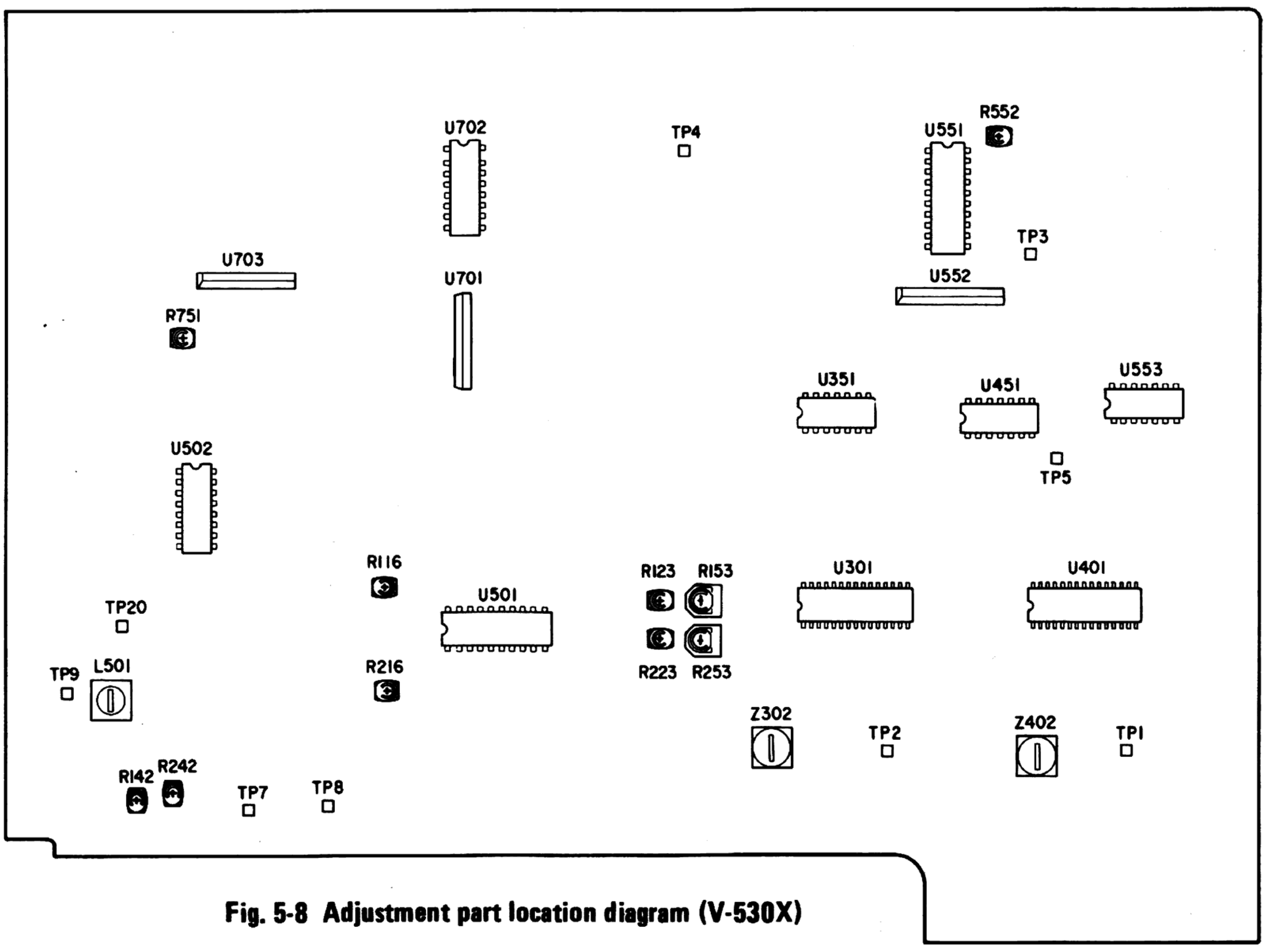

Fig. 5-8 Adjustment part location diagram (V-530X)

www.hifiengine.com

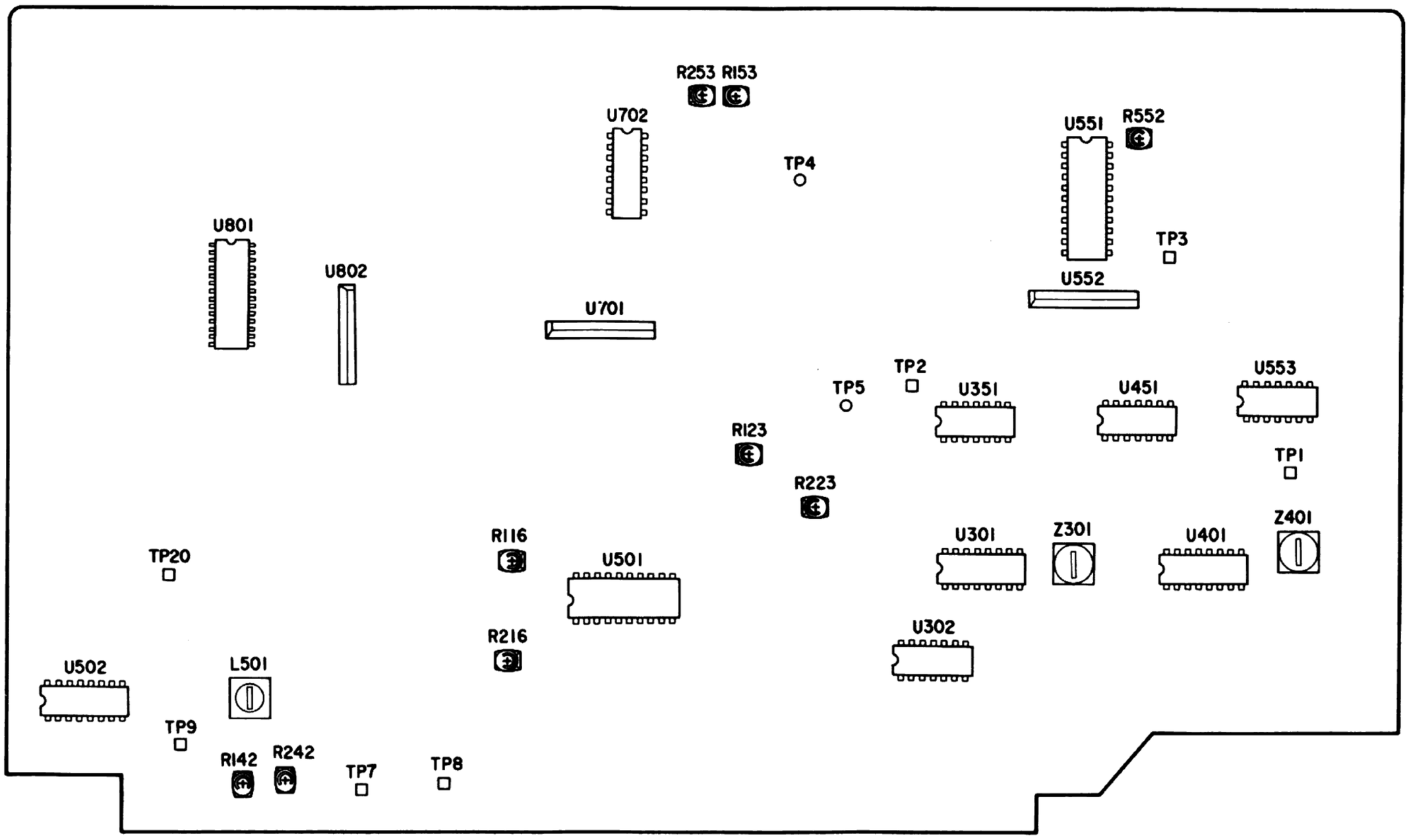

Fig. 5-9 Adjustment part location diagram (V-430X)

R116/R216	Playback level adj.	再生感度調整
R123/R223	REC/PB level adj.	録再感度調整
R142/R242	Overall freq. response adj.	録再F特調整
R153/R253	Meter adj.	メータ調整
R552	dbx adj.	DBX調整
L501	OSC Frequency adj.	発振周波数調整

PRECAUTIONS

1. Since this deck has an automatic tape selector, be sure to use test tapes that have tape position detecting holes.
2. Before performing adjustments and checks, clean and demagnetize the entire tape path.
3. Check that the deck is properly set for the voltage in your locality.
4. In general, adjustments and checks are done in the order of L-ch then R-ch. Double REF. Nos. indicate L-ch/R-ch. (Example: R116/R226)
5. The value of "dB" refers to 0 dB (0.775V). If an AC voltmeter calibrated to 0 dB (1V) is to be used, appropriate compensation should be made.
6. The AC voltmeter used in the procedures must have an input impedance of 1M-ohms or more.

準備

1．本機はテープ・セレクタ自動検出機構になっていますので，テスト・テープは必ずテープ・ポジション検出孔のあるものを使用して下さい．
2．アンプ部の調整・確認の前に，テープ走行系の消磁と清掃を行なってください．
3．特に指定のない限り，調整はLch，Rchの順序で行なって下さい．
尚，R116/R216のように記されている回路番号は，Lch/Rchを示します．
4．0dB=0.775V
5．測定に使用するレベル計の入力インピーダンスは1MΩ以上のものを使用してください．

www.hifiengine.com

PLAYBACK PERFORMANCE
再生系

Initial deck setting:

OUTPUT cont: MAX
RECORD cont: MIN
NR SYSTEM sw: OUT

TEAC test tapes:

MTT-150: For Dolby level calibration
MTT-256: For playback frequency response check for NORMAL
MTT-356: For playback frequency response check for CrO_2, METAL
MTT-111: For tape speed & W/F check

ITEM 調整項目	SETTING 設定	INPUT SIGNAL 入力信号	ADJUST 調整個所	RESULT 調整値	REMARKS 備考
1. REC/PLAY head azimuth 録再ヘッド・アジマス	Connection: Fig. 5-2	MTT-356(12.5kHz)	Azimuth adj. screw アジマス調整ネジ	OUTPUT: MAX 最大	
2. Tape speed テープ速度	Connection: Fig 5-6	MTT-111	Semi-fixed resistor on the capstan motor キャプスタン・モータ内の半固定	OUTPUT: 3,000Hz±30Hz	
3. Playback level 再生レベル	Connection: Fig. 5-5	MTT-150	R116/R216	TP-2(L ch) TP-1 (R ch) 580mV(−2.5dB)±10mV	OUTPUT: −3.5dB (510mV)
4. Frequency response 周波数特性	Connection: Fig. 5-1	MTT-356 (315Hz/10kHz)	Check	OUTPUT: 315Hz 0dB 10kHz $^{+3}_{-5}$dB	

MONITOR PERFORMANCE
モニタ系

Deck setting:

Mode: REC/PAUSE
OUTPUT cont: MAX

TEAC test tape:

MTT-5072: For METAL record test

ITEM 調整項目	SETTING 設定	INPUT SIGNAL 入力信号	ADJUST 調整個所	RESULT 調整値	REMARKS 備考
5. OSC Frequency 発振周波数	Connection: Fig. 5-7	MTT-5072	L501	TP-9/TP-20 (GND) 83kHz±3kHz	
6. Specified LINE input level 規定入力レベル	Connection: Fig. 5-5 MTT-5072	LINE IN: 400Hz/−8dB (308mV)	RECORD cont: RECORD つまみ	TP-2 (L ch) TP-1 (R ch) 580mV(−2.5dB)±10mV	OUTPUT: −3.5dB (510mV)
	LINE specified input condition. IMPORTANT: Do not touch RECORD cont. during later checks. LINE規定入力状態 注意：以降の調整に於てRECORDつまみを動かさないこと.				
7. PEAK LEVEL (dB) meter	Same as above	LINE IN: 400Hz/−8dB (308mV)	R153/R253	0dB light up 点灯	

RECORDING PERFORMANCE
録音系

Deck setting:

Mode: REC/PAUSE
OUTPUT cont: MAX
RECORD cont: Specified position

TEAC test tapes:

MTT-5061: For CrO_2 record test
MTT-5072: For METAL record test

ITEM 調整個所	SETTING 設定	INPUT SIGNAL 入力信号	ADJUST 調整個所	RESULT 調整値	REMARKS 備考
8. Overall frequency response 録再周波数特性	Connection: Fig. 5-1 MTT-5061	LINE IN: 400Hz & 12.5kHz alternately/−38dB (10mV)	R142/R242	OUTPUT: 12.5kHz output against that of 400Hz: ±1dB 12.5kHz出力が400Hzに対して±1dB	
9. Record level 録音レベル	MTT-5061	LINE IN: 400Hz/−8dB (308mV)	R123/R223	OUTPUT: −3.5dB (510mV)	
10. Distortion 歪率	MTT-5061	LINE IN: 333Hz/−11dB (218mV)	Check	OUTPUT: 2.0% or less 以下	3rd Harmonic Distortion 3次高調波歪

www.hifiengine.com

ITEM 調整個所	SETTING 設定	INPUT SIGNAL 入力信号	ADJUST 調整個所	RESULT 調整値	REMARKS 備考
11. Signal-to-noise ratio SN比	MTT-5061	LINE IN: 400Hz/−8dB (308mV) ↓ no signal	Check	OUTPUT: 49dB min. ratio 以上 (IHF A)	
12. Erase efficiency 消去率	● Connection is same as in Fig. 5-1, but engage 1-kHz filter. ● Record a 1-kHz signal. Rewind tape to midpoint of recorded portion. Record a "no signal" portion. Find the difference between the 1-kHz portion and the "no signal" portion. 録音部分を再生した時のレベルを基準レベルとし、録音部分を消去した時の出力レベルとの差				
	MTT-5072	LINE IN: 1kHz/+2dB (1V) ↓ no signal	Check	OUTPUT: 60dB min. ratio	1kHz B.P.F. 使用
13. Channel Separation チャネル間 セパレーション	● Connection: Fig. 5-1, but do not connect LINE IN (R), and engage 1-kHz filter. ● Set the deck to record mode. Find the difference between the 1-kHz recorded portion (L-ch) and the "no-signal" portion (R-ch). Then change the connection and check reverse operation. Lch再生レベルを基準とし、Rchとの出力レベルの差. LchとRchの信号を入れかえた場合についてもチェックすること.				
	MTT-5061	LINE IN: L-ch 1kHz/+2dB (1V) R-ch No signal	Check	OUTPUT: 30dB min. ratio 以下	1kHz B.P.F. 使用
14. Adjacent track crosstalk 隣接トラック・ クロストーク	● Connection: Fig. 5-1, but do not connect LINE IN (L) and OUTPUT (L), and engage 1-kHz filter. ● Record a 125-Hz signal on R-ch and note output level. Invert tape and play R-ch track. Check leakage level against the output reference of previously recorded portion. 録音されたトラックを再生したときの出力レベルを基準レベルとし、テープを反転して再生したときのRch出力レベルとの差				
	MTT-5061	LINE IN: L-ch No signal R-ch 1kHz/+2dB (1V)	Check	OUTPUT: 60dB min. ratio 以下	1kHz B.P.F. 使用
15. Dolby NR effect ドルビーNR効果 **(B-type)**	● Record a 1-kHz signal with NR SYSTEM switch OUT. Play this portion with NR SYSTEM switch set first to OUT, then to DD B. Obtain the difference in output level between OUT and DD B positions. Repeat the above process using a 10-kHz signal. NR SYSTEMスイッチをOUT位置にして信号を録音する. 次にこれを再生し、スイッチをOUT↔DDBと切換えた時の出力レベル変化				
	MTT-5061	LINE IN: 1kHz/−28dB (30mV)	Check	OUTPUT: Variation 3dB ~ 8dB	
		LINE IN: 10kHz/−38dB (10 mV)	Check	OUTPUT: Variation 8dB ~ 10dB	
16. Dolby NR effect ドルビーNR効果 **(C-type)** **V-530X only**	● Repeat same procedure as above, only see that the NR SYSTEM switch is set to DD C. NR SYSTEMスイッチをOUT位置にして信号を録音する. 次にこれを再生し、スイッチをOUT↔DDCと切換えた時の出力レベル変化				
	MTT-5061	LINE IN: 1kHz/−38dB (10mV)	Check	OUTPUT: Variation 16dB ~ 20dB	
		LINE IN: 10kHz/−48dB (3mV)	Check	OUTPUT: Variation 16dB ~ 20dB	
17. dbx adj.	NR SYSTEM: dbx MTT-5061	LINE IN: 1kHz/−11dB (218mV)	R552	between TP-3 & TP-4 15±0.15mV DC	
18. Signal-to-noise ratio (dbx)	NR SYSTEM: dbx MTT-5061	LINE IN: 400Hz/−8dB (308mV) ↓ no signal	Check	OUTPUT: 72dB min. ratio 以上 (IHF A)	

www.hifiengine.com

6 BLOCK DIAGRAM

ブロック・ダイヤグラム

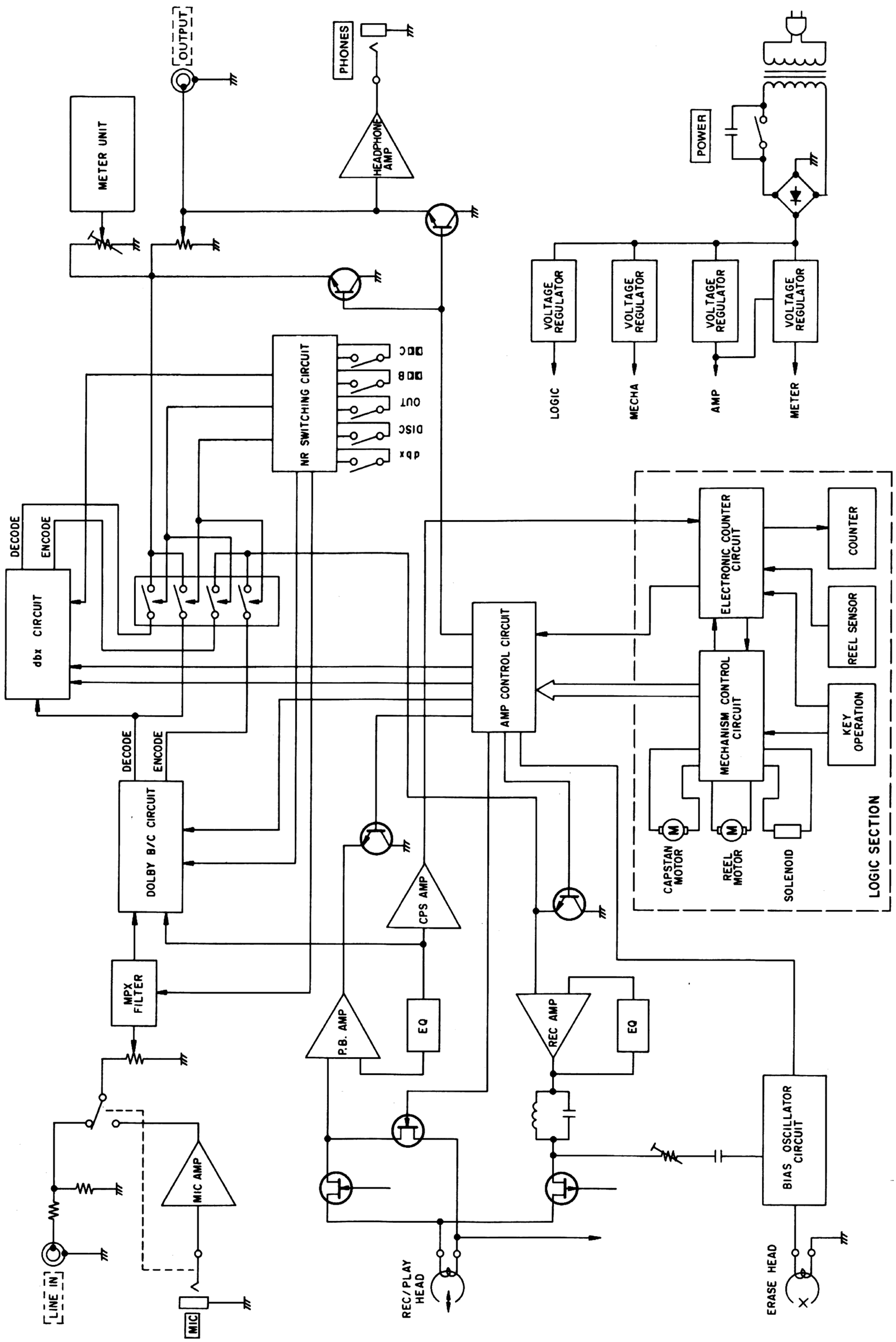

Fig. 6-1 Block diagram (V-530X)

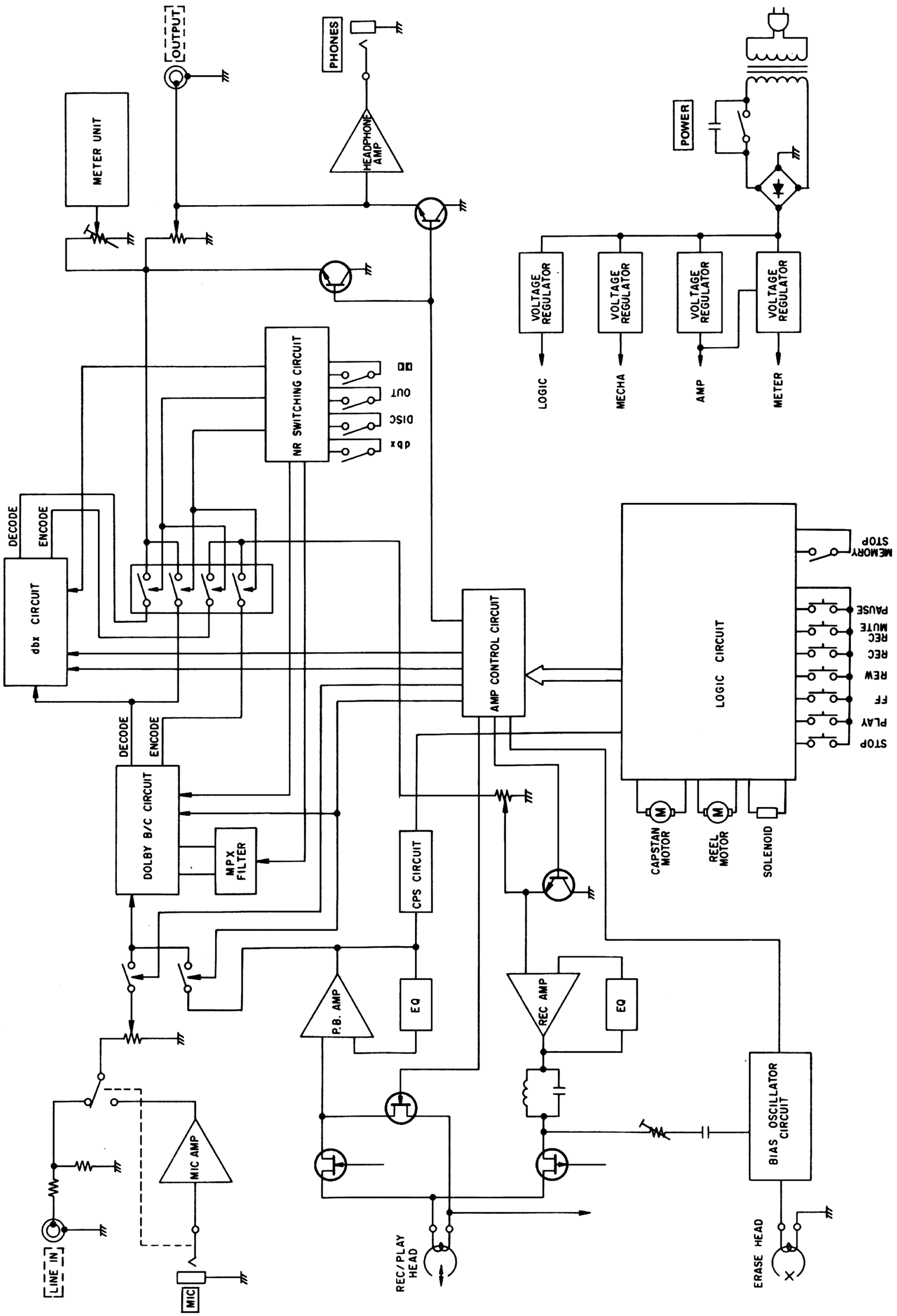

Fig. 6-2 Block diagram (V-430X)

www.hifiengine.com

ASSEMBLING HARDWARE CODING LIST

ねじ類一覧表

All screws conform to ISO standards, and have crossrecessed heads, unless otherwise noted.
ISO screws have the head inscribed with a point as in the figure to the right.

FOR EXAMPLE:

B M 3 x 6

- 6 — Length in mm (L)
- 3 — Diameter in mm (D) *
- M — Metric System
- B — Nomenclature

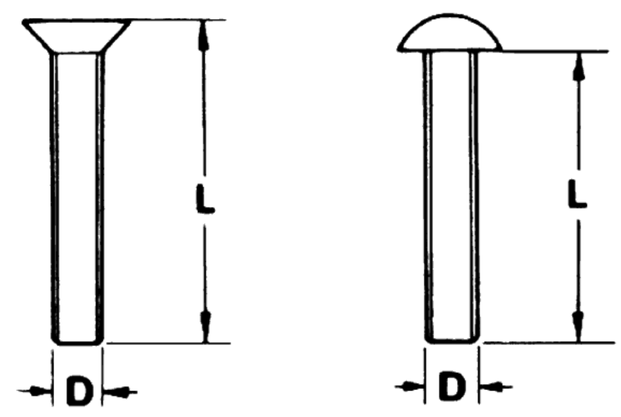

* Inner dia. for washers and nuts

	Code	Name	Type
MACHINE SCREW	**R**	Round Head Screw	
	P	Pan Head Screw	
	T	Stove Head Screw (Truss)	
	B	Binding Head Screw	
	F	Flat Countersunk Head Screw	
	O	Oval Countersunk Head Screw	
WOOD SCREW	**RW**	Round Head Wood Screw	
	FW	Flat Countersunk Wood Screw	
	OW	Oval Countersunk Wood Screw	
SEMS SCREW	**BSA**	Binding Head SEMS Screw(A Type)	
	BSB	Binding Head SEMS Screw(B Type)	
	BSF	Binding Head SEMS Screw(F Type)	
	PSA	Pan Head SEMS Screw(A Type)	
	PSB	Pan Head SEMS Screw(B Type)	

	Code	Name	Type
TAPPING SCREW	**BTA**	Binding Head Tapping Screw(A Type)	
	BTB	Binding Head Tapping Screw(B Type)	
	RTA	Round Head Tapping Screw(A Type)	
	RTB	Round Head Tapping Screw(B Type)	
SETSCREW	**SF**	Hex Socket Setscrew(Flat Point)	
	SC	Hex Socket Setscrew(Cup Point)	
	SS	Slotted Socket Setscrew(Flat Point)	
WASHER	**E**	E-Ring (Retaining Washer)	
	W	Flat Washer (Plain)	
	SW	Lock Washer (Spring)	
	LWI	Lock Washer (Internal Teeth)	
	LWE	Lock Washer (External Teeth)	
	TW	Trim Washer (Countersunk)	
NUT	**N**	Hex Nut	

www.hifiengine.com

PARTS LIST SECTION

www.hifiengine.com

7 EXPLODED VIEWS AND PARTS LIST

分解図とパーツ・リスト

EXPLODED VIEW-1 (V-530X)

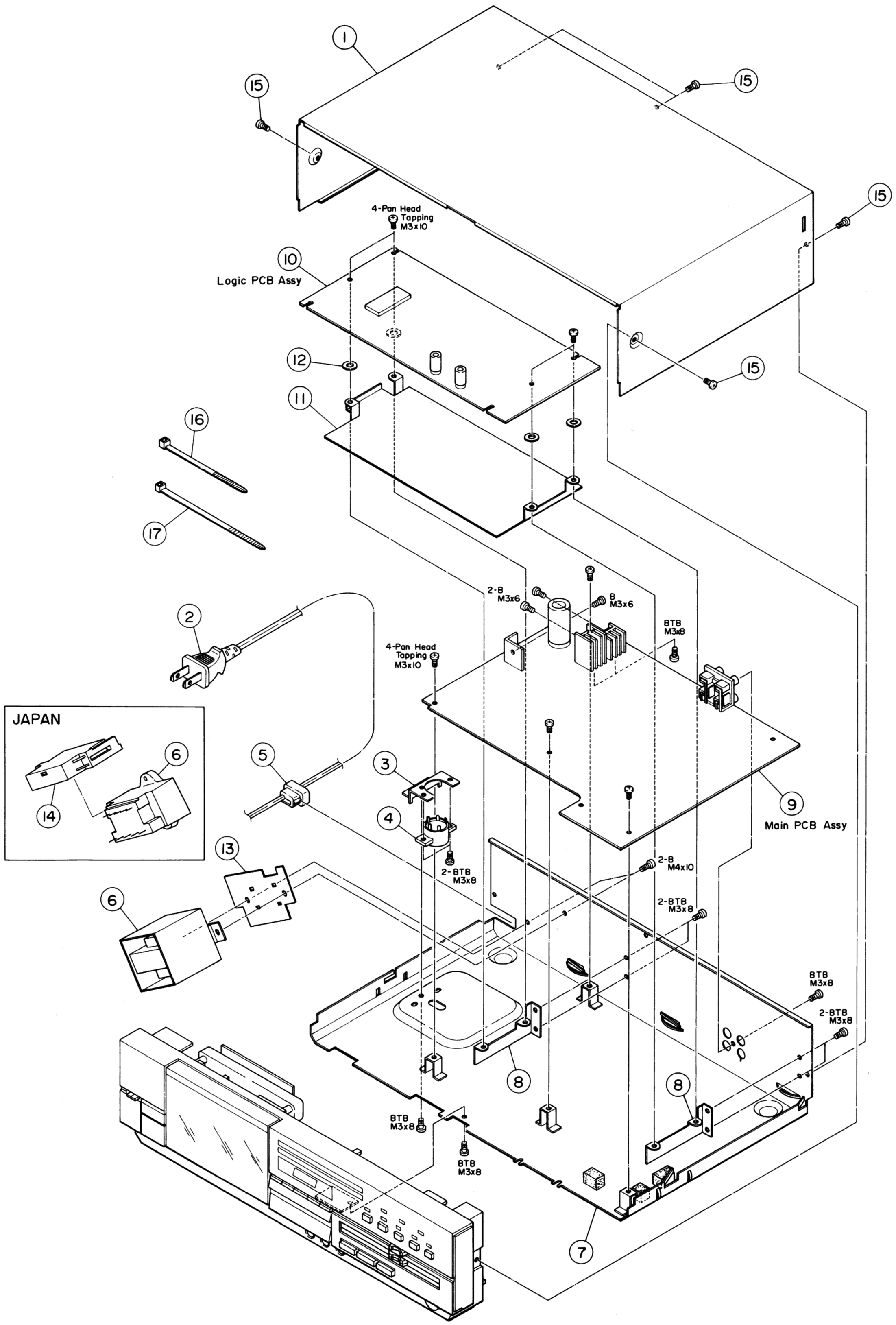

www.hifiengine.com

REF. NO.	PARTS NO.	DESCRIPTION		COMMON MODELS	REMARKS
1 - 1	*5760682300	Cover, Top (BLK)			
	*5760682500	Cover, Top			
1 - 2	⚠*5128027000	Cord Assy, AC Power	[J]		
	⚠*5350010800	Cord Assy, AC Power	[US, C, GE]		
	⚠*5128047000	Cord Assy, AC Power	[UK]		
	⚠*5350011700	Cord Assy, AC Power	[E]		
1 - 3	*5760680400	Bracket, Voltage Selector	[GE]		
1 - 4	⚠*5760673100	Switch, Voltage Selector	[GE]		
1 - 5	⚠*5760680600	Bushing, Cord			
1 - 6	⚠ 5760722200	Transformer, Power	[J]		
	⚠ 5760673800	Transformer, Power; 367-U/C	[US, C]		
	⚠ 5760673900	Transformer, Power; 368-TU	[E]		
	⚠ 5760674100	Transformer, Power; 371-VF	[GE]		
1 - 7	*5760722000	Chassis Assy	[J]		
	*5760681700	Chassis Assy	[US, C]		
	*5760681900	Chassis Assy	[E]		
	*5760681800	Chassis Assy	[GE]		
1 - 8	*5760681000	Bracket, PCB			
1 - 9	*5760770000	PCB Assy, Main			
1 - 10	*5760770100	PCB Assy, Logic			
1 - 11	*5760675300	Plate, Shield			
1 - 12	*5760675700	Spacer			
1 - 13	*5760680700	Retainer, Transformer			
1 - 14	*5760680900	Cover, Transformer (V-530XBL) [J]			
1 - 15	*5760675000	Screw, Binding Head Tapping; M3 x 10 (Ni)			
	*5760674900	Screw, Binding Head Tapping; M3 x 10 (BLK)			
1 - 16	*5760722300	Band, Wire; SS L100			
1 - 17	*5760722400	Band, Wire; L145			

INCLUDED ACCESSORIES

REF. NO.	PARTS NO.	DESCRIPTION		COMMON MODELS	REMARKS
	*5700060700	V-530X/V-430X Owner's Manual	[J]		
	*5700060500	V-530X/V-430X Owner's Manual	[All except J]		
	*5700060600	V-530X/V-430X Owner's Manual	[C, GE, E]		
	*5760722600	Cord Assy, In-output			

Parts marked with * require longer delivery time.

[US]: U.S.A. [C]: CANADA [GE]: GENERAL EXPORT [E]: EUROPE [UK]: U.K.
[J]: JAPAN

www.hifiengine.com

EXPLODED VIEW-2 (V-530X)

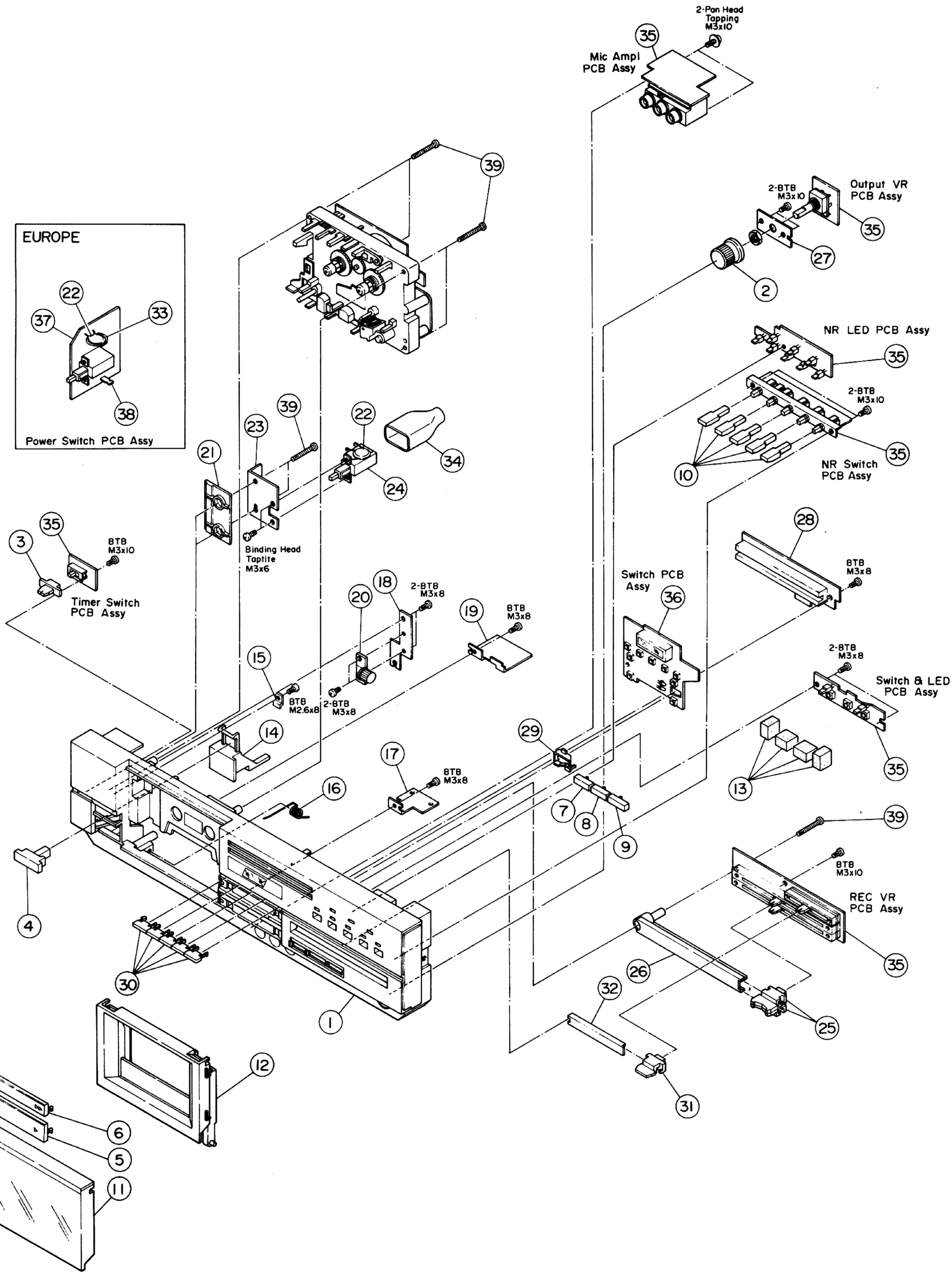

www.hifiengine.com

REF. NO.	PARTS NO.	DESCRIPTION	COMMON MODELS	REMARKS
2 - 1	*5760686600	Panel Assy, Front		
	*5760686400	Panel Assy, Front (BLK)		
2 - 2	5760684500	Knob, OUTPUT VR		
2 - 3	5760684200	Knob, TIMER		
	5760684800	Knob, TIMER (BLK)		
2 - 4	5760684100	Knob, POWER		
	5760684900	Knob, POWER (BLK)		
2 - 5	5760684400	Knob, PLAY		
	5760685100	Knob, PLAY (BLK)		
2 - 6	5760684000	Knob, FF		
	5760685200	Knob, FF (BLK)		
2 - 7	5760683900	Knob, REC		
	5760685600	Knob, REC (BLK)		
2 - 8	5760684600	Knob, MUTE		
	5760685700	Knob, MUTE (BLK)		
2 - 9	5760684700	Knob, PAUSE		
	5760685800	Knob, PAUSE (BLK)		
2 - 10	5760683700	Knob, NR		
	5760685900	Knob, NR (BLK)		
2 - 11	5760683100	Cover Assy, Cassette		
	5760683200	Cover Assy, Cassette (BLK)		
2 - 12	5760724900	Holder Assy, Cassette		
2 - 13	*5760679900	Cushion		
2 - 14	5760684300	Knob, EJECT		
	5760685000	Knob, EJECT (BLK)		
2 - 15	*5760676000	Bracket, Knob		
2 - 16	*5760678300	Spring, EJECT		
2 - 17	*5760682000	Bracket, Cassette Holder; R		
2 - 18	*5760682200	Bracket, Damper		
2 - 19	*5760682400	Bracket, Cassette Holder; L		
2 - 20	5760683000	Damper New		
2 - 21	*5760676500	Cover, Panel		
	*5760676400	Cover, Panel (BLK)		
2 - 22	⚠*5760769100	Capacitor, Cermaic 4700pF [E]		
	⚠*5760769200	Capacitor, Ceramic 0.01μF 50V [J, US, C, GE]		
2 - 23	*5760682100	Side Chassis, L		
2 - 24	5760673200	Switch, POWER		
2 - 25	5760724500	Knob Assy, REC		
	*5760769500	Knob Assy, REC (BLK)		
2 - 26	*5760682700	Guide, REC VR		
2 - 27	*5760680500	Bracket, VR		
2 - 28	5760670200	Meter Unit		
2 - 29	*5760679800	Reflector, 430		
2 - 30	5760683600	Knob, CPS		
	5760685300	Knob, CPS (BLK)		
2 - 31	5760724600	Knob Assy, BIAS		
	5760724700	Knob Assy, BIAS (BLK)		
2 - 32	*5760682800	Guide, BIAS		
2 - 33	*5760675800	Cover, Capacitor [E]		
2 - 34	*5760676200	Cover, Switch [US, C]		
2 - 35	*5760770000	PCB Assy, Main		
2 - 36	*5760770100	PCB Assy, Logic		
2 - 37	*5760672200	PCB, Power Switch [E]		
2 - 38	*5760672000	Terminal, Power [E]		
2 - 39	*5760674800	Screw, Binding Head Tapping; M3 x 25 (Red)		

Parts marked with * require longer delivery time.

[US]: U.S.A. [C]: CANADA [GE]: GENERAL EXPORT [E]: EUROPE [UK]: U.K.
[J]: JAPAN

www.hifiengine.com

EXPLODED VIEW-3 (V-430X)

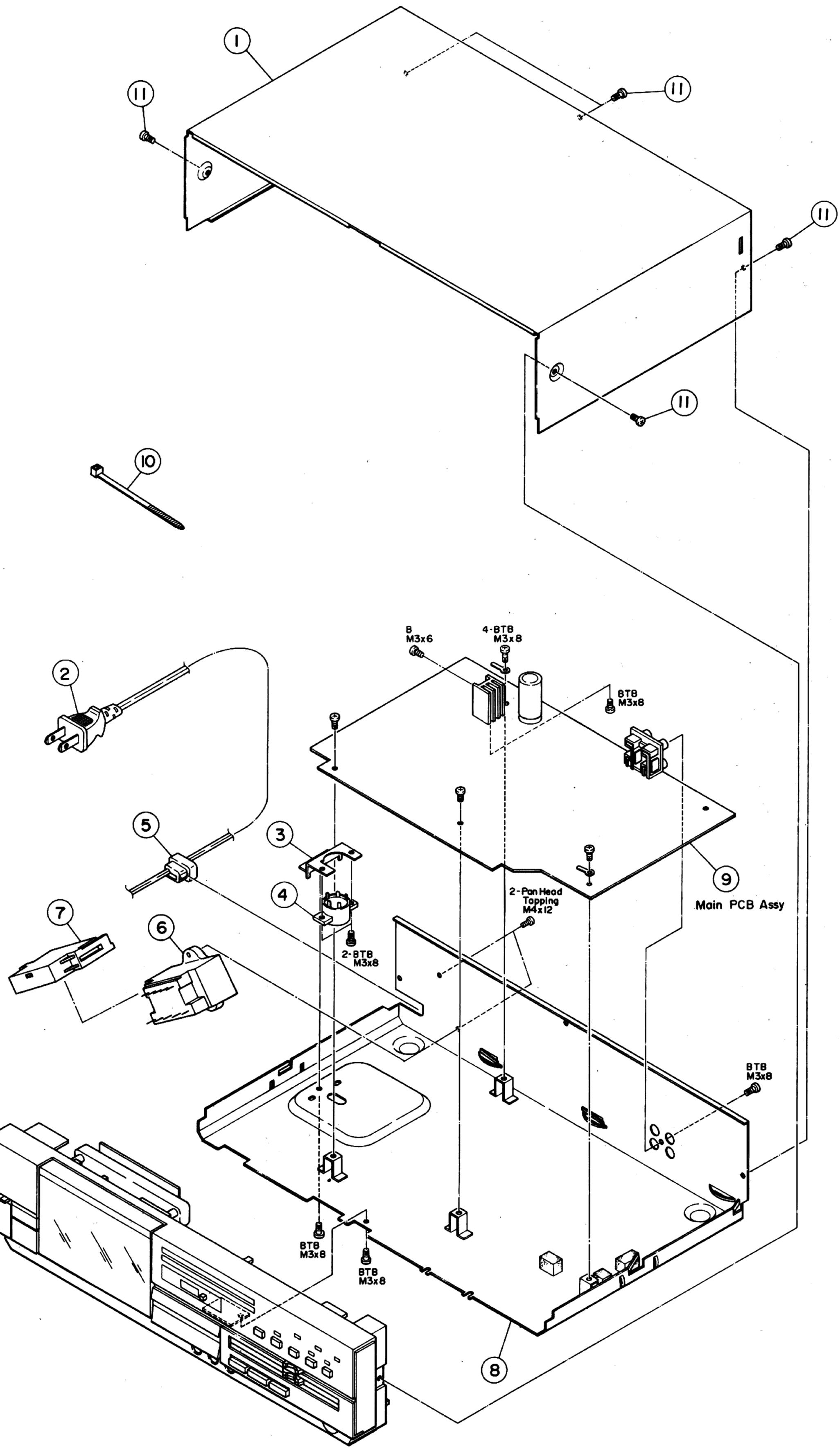

www.hifiengine.com

REF. NO.	PARTS NO.	DESCRIPTION		COMMON MODELS	REMARKS
3 - 1	*5760682300	Cover, Top (BLK)			
	*5760682500	Cover, Top			
3 - 2	⚠*5128027000	Cord Assy, AC Power	[J]		
	⚠*5350010800	Cord Assy, AC Power	[US, C, GE]		
	⚠*5128047000	Cord Assy, AC Power	[UK]		
	⚠*5350011700	Cord Assy, AC Power	[E]		
3 - 3	*5760680400	Bracket, Voltage Selector	[GE]		
3 - 4	⚠*5760673100	Switch, Voltage Selector	[GE]		
3 - 5	⚠*5760680600	Bushing, Cord			
3 - 6	⚠ 5760722100	Transformer, Power	[J]		
	⚠ 5760673700	Transformer, Power; 163-U/C	[US, C]		
	⚠ 5760673500	Transformer, Power; 115-TE	[E]		
	⚠ 5760674000	Transformer, Power; 370-VF	[GE]		
	⚠ 5760673600	Transformer, Power; 157-TU	[UK]		
3 - 7	*5760680900	Cover, Transformer	[J, US, C, E, UK]		
3 - 8	*5760721900	Chassis Assy	[J]		
	*5760681300	Chassis Assy	[US, C]		
	*5760681400	Chassis Assy	[E]		
	*5760681600	Chassis Assy	[GE]		
	*5760681500	Chassis Assy	[UK]		
3 - 9	*5760770010	PCB Assy, Main			
3 - 10	*5760722300	Band, Wire; SS 100			
3 - 11	*5760675000	Screw, Binding Head Tapping; M3 x 10 (Ni)			
	*5760674900	Screw, Binding Head Tapping; M3 x 10 (BLK)			

Parts marked with * require longer delivery time.

[US] : U.S.A. [C] : CANADA [GE] : GENERAL EXPORT [E] : EUROPE [UK] : U.K.
[J] : JAPAN

www.hifiengine.com

EXPLODED VIEW-4 (V-430X)

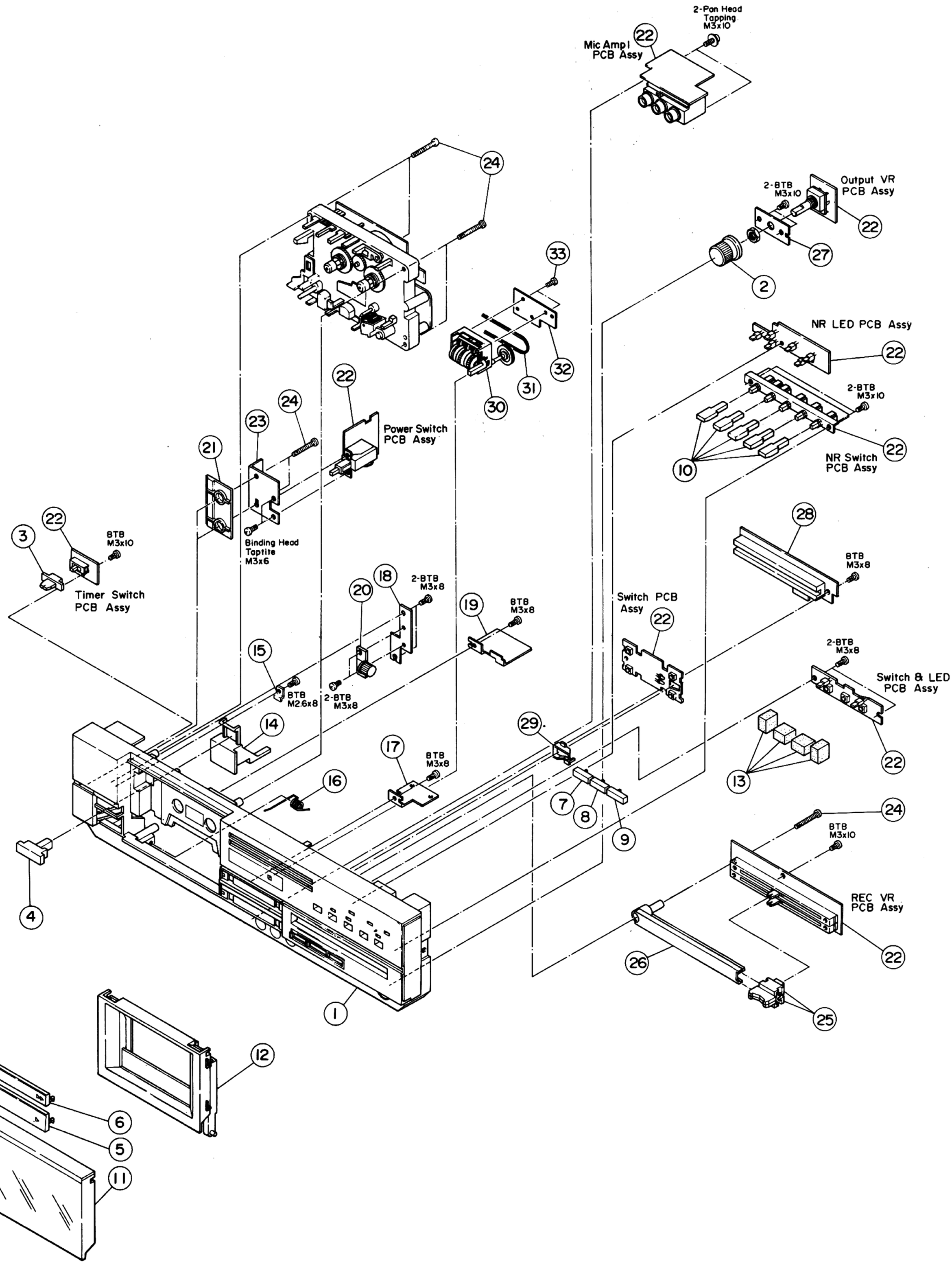

www.hifiengine.com

REF. NO.	PARTS NO.	DESCRIPTION	COMMON MODELS	REMARKS
4 - 1	*5760686500	Panel Assy, Front		
	*5760769900	Panel Assy, Front (BLK)		
4 - 2	5760684500	Knob, OUTPUT VR		
4 - 3	5760684200	Knob, TIMER		
	5760684800	Knob, TIMER (BLK)		
4 - 4	5760684100	Knob, POWER		
	5760684900	Knob, POWER (BLK)		
4 - 5	5760686000	Knob, PLAY (S)		
	5760685100	Knob, PLAY (BLK)		
4 - 6	5760686100	Knob, FF (S)		
	5760685200	Knob, FF (BLK)		
4 - 7	5760683900	Knob, REC		
	5760685600	Knob, REC (BLK)		
4 - 8	5760684600	Knob, MUTE		
	5760685700	Knob, MUTE (BLK)		
4 - 9	5760684700	Knob, PAUSE		
	5760685800	Knob, PAUSE (BLK)		
4 - 10	5760683700	Knob, NR		
	5760685900	Knob, NR (BLK)		
4 - 11	5760683100	Cover Assy, Cassette		
	5760683200	Cover Assy, Cassette (BLK)		
4 - 12	5760724800	Holder Assy, Cassette		
4 - 13	*5760679900	Cushion		
4 - 14	5760684300	Knob, EJECT		
	5760685000	Knob, EJECT (BLK)		
4 - 15	*5760676000	Bracket, Knob		
4 - 16	*5760678300	Spring, EJECT		
4 - 17	*5760682000	Bracket, Cassette Holder; R		
4 - 18	*5760682200	Bracket, Damper		
4 - 19	*5760682400	Bracket, Cassette Holder; L		
4 - 20	5760683000	Damper New		
4 - 21	*5760676500	Cover, Panel		
	*5760676400	Cover, Panel (BLK)		
4 - 22	*5760770010	PCB Assy, Main		
4 - 23	*5760682100	Side Chassis, L		
4 - 24	*5760674800	Screw, Binding Head Tapping; M3 x 25 (Red)		
4 - 25	5760724500	Knob Assy, REC		
	*5760769500	Knob Assy, REC (BLK)		
4 - 26	*5760682700	Guide, REC VR		
4 - 27	*5760680500	Bracket, VR		
4 - 28	5760670200	Meter Unit		
4 - 29	*5760679800	Reflector, 430		
4 - 30	5760682900	Counter, Tape		
4 - 31	5760678100	Belt, Counter		
4 - 32	*5760680300	Bracket, Counter		
4 - 33	*5760722500	Screw, Binding Head Tapping; M2.6 x 6		

Parts marked with * require longer delivery time.

www.hifiengine.com

EXPLODED VIEW-5

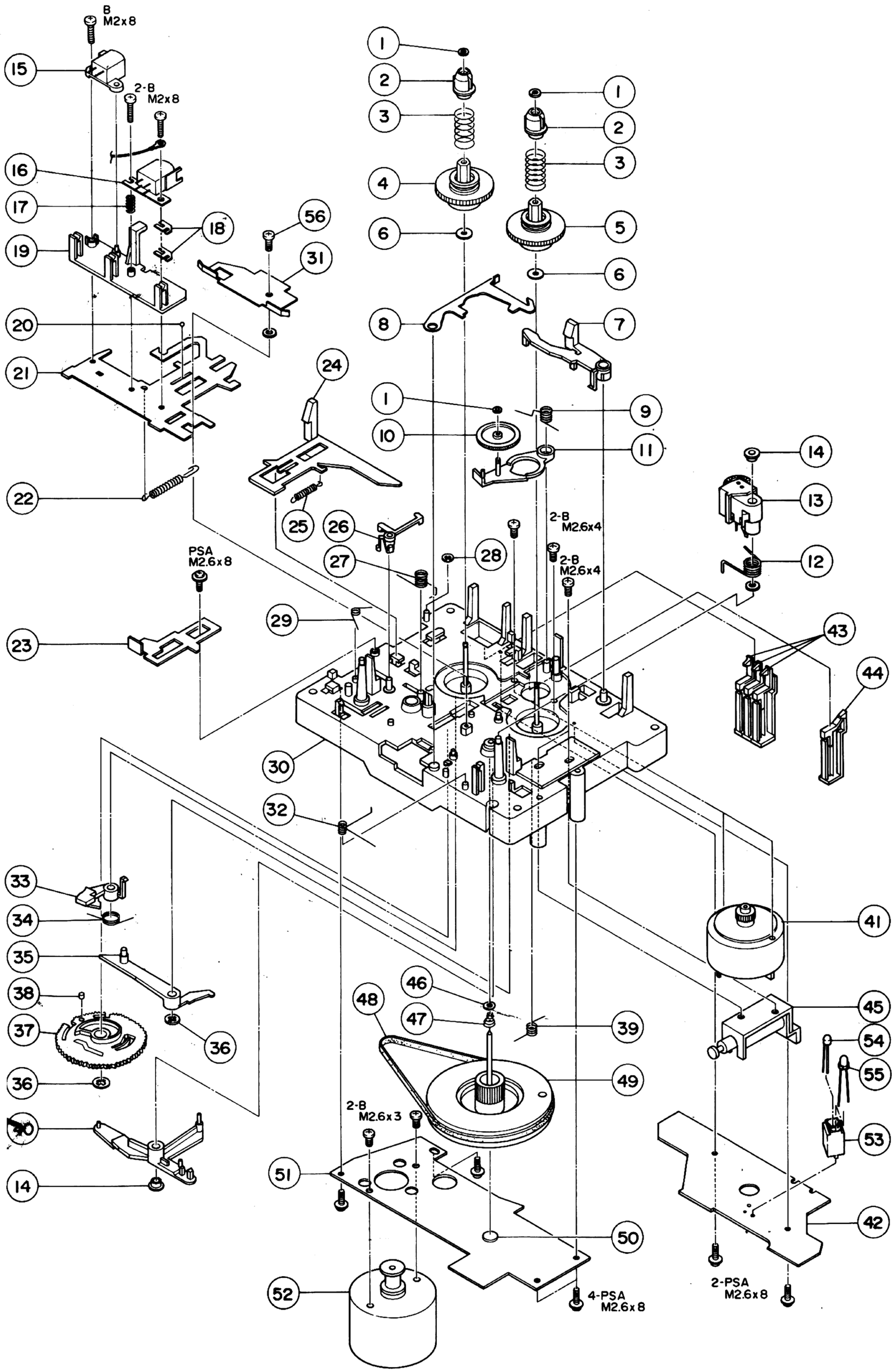

REF. NO.	PARTS NO.	DESCRIPTION	COMMON MODELS	REMARKS
5 - 1	5760707100	Washer, Reel Drum; ϕ 1.6 x ϕ 4 x 0.5t		
5 - 2	5760706700	Collar, Reel		
5 - 3	5760707200	Spring, Reel		
5 - 4	5760706800	Drum, Reel		
5 - 5	5760707400	Drum Assy, Take-up Reel		
5 - 6	5760707000	Washer, Reel Drum		
5 - 7	*5760705200	Lever, Holder		
5 - 8	*5760721400	Lever, M.Q.S.		
5 - 9	5760705000	Spring, Holder		
5 - 10	5760706900	Gear, Transfer		
5 - 11	5760721100	Lever Assy, Take-up		
5 - 12	5760704300	Spring, Pinch Roller Lever		
5 - 13	5760704500	Lever Assy, Pinch Roller		
5 - 14	5760699100	Bush (BLK)		
5 - 15	5760702600	Head ERASE; HET-255		
5 - 16	5378903700	Head, Rec/Play; TDK		
5 - 17	5760703400	Spring, Azimuth		
5 - 18	5760702300	Spacer, Adjust		
5 - 19	5760703700	Base, Head		
5 - 20	5760703200	Ball, Steel; ϕ 1.5		
5 - 21	*5760703100	Slider, Head		
5 - 22	*5760703300	Spring, Assist		
5 - 23	*5760704700	Sub Slider, Eject		
5 - 24	*5760705400	Slider, Eject		
5 - 25	*5760704800	Spring, Eject		
5 - 26	*5760705300	Lever, Lock		
5 - 27	5760703500	Spring, PLAY Lever		
5 - 28	*5760705100	Bushing		
5 - 29	5760704900	Spring, Lock		
5 - 30	*5760703000	Chassis Assy, Mechanism		
5 - 31	*5760703600	Holder, Spring		
5 - 32	5760706100	Spring, M.Q.S.		
5 - 33	*5760706300	Lever, PLAY Lock		
5 - 34	*5760706000	Spring, PLAY Lock		
5 - 35	*5760706400	Lever, PLAY		
5 - 36	*5760705600	Ring		
5 - 37	5760705800	Cam Gear, Main		
5 - 38	*5760705500	Magnet, ϕ 2.3 x 2.8		
5 - 39	*5760705900	Spring, Cam Lock		
5 - 40	*5760706500	Lever, Cam Lock		
5 - 41	5760702900	Motor Assy, Reel		
5 - 42	*5760702200	PCB Assy, Mechanism		
5 - 43	5760702400	Switch, Cassette; S851 ~ S853		
5 - 44	5760702500	Switch, Metal Tape; S854		
5 - 45	5760705700	Solenoid, L1		
5 - 46	5760704000	Washer, Flywheel		
5 - 47	5760704200	Spring, Flywheel		
5 - 48	5760703900	Belt, Main		
5 - 49	5760704600	Flywheel Assy		
5 - 50	*5760704100	Washer, Thrust		
5 - 51	*5760721000	Plate, Motor Mount		
5 - 52	5760702800	Motor Assy, Main		
5 - 53	*5760702700	Holder, Sensor (V-530X)		
5 - 54	5760702100	Phototransistor, TPS-603-B, Q851 (V-530X)		
5 - 55	5760668700	LED, TLR-123; D851 (V-530X)		
5 - 56	*5760725200	Screw, Binding Head Tapping; M2 x 5		

Parts marked with * require longer delivery time.

www.hifiengine.com

8 PC BOARDS AND PARTS LIST

基板図とパーツ・リスト

— Amplifier Section —

MIC AMPL. PCB ASSY (V-530X)

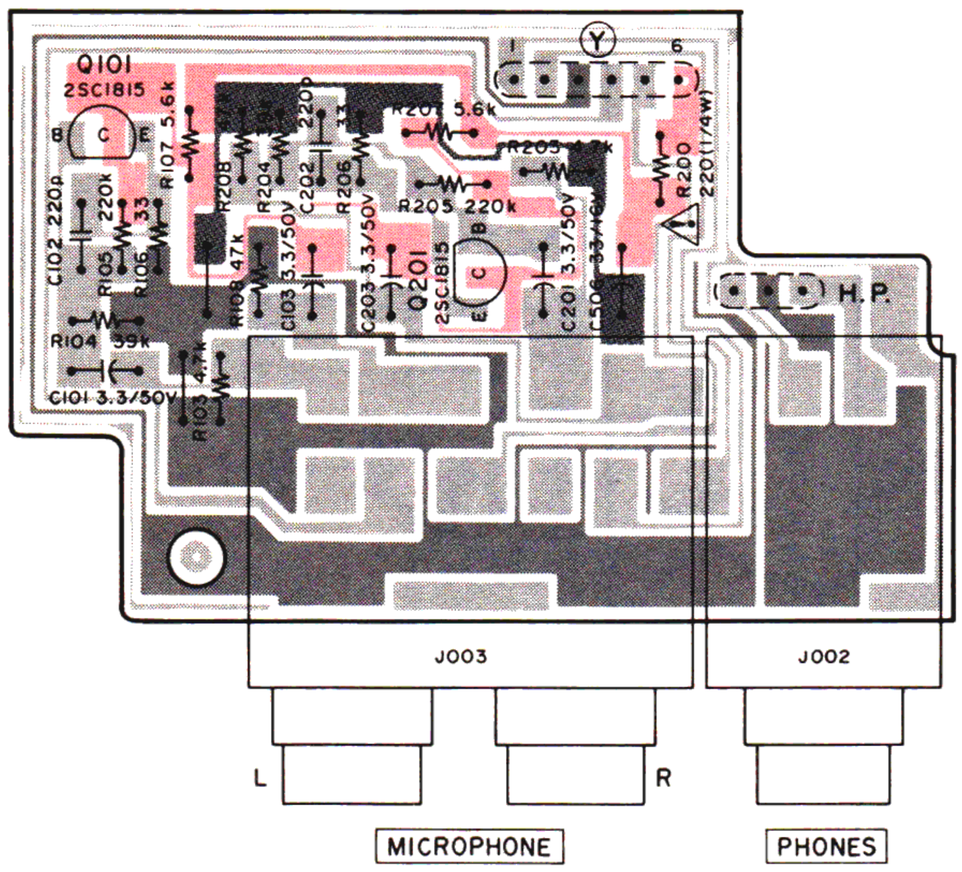

NR LED PCB ASSY (V-530X)

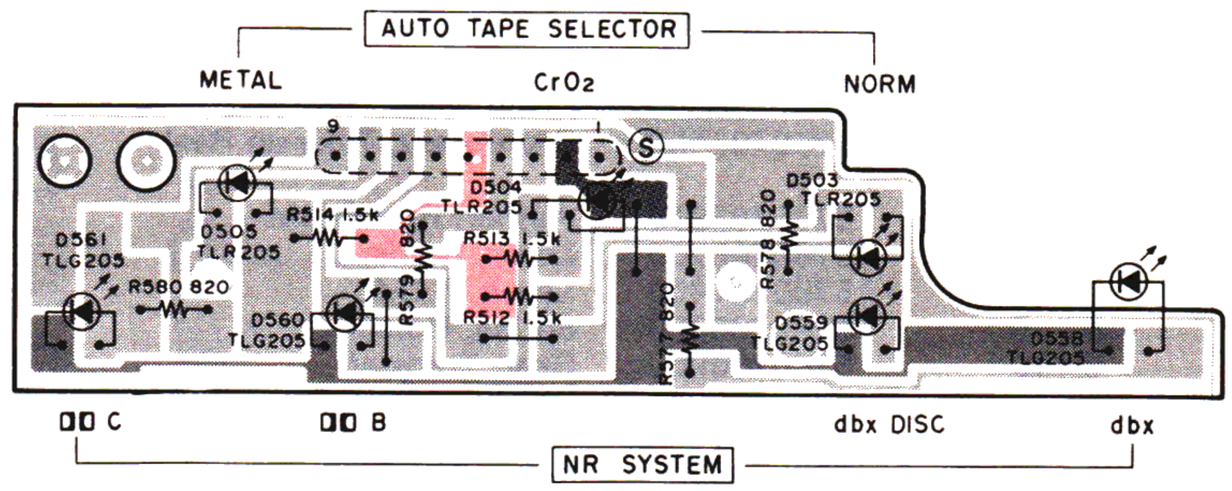

NR SWITCH PCB ASSY (V-530X)

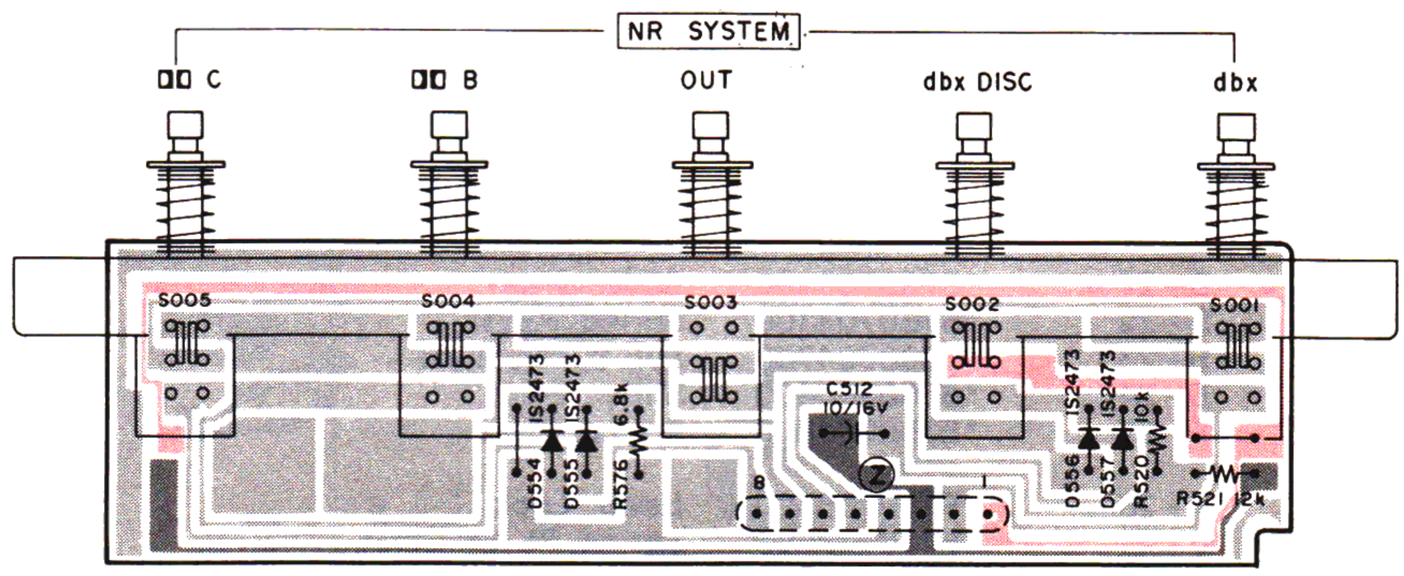

SWITCH & LED PCB ASSY (V-530X)

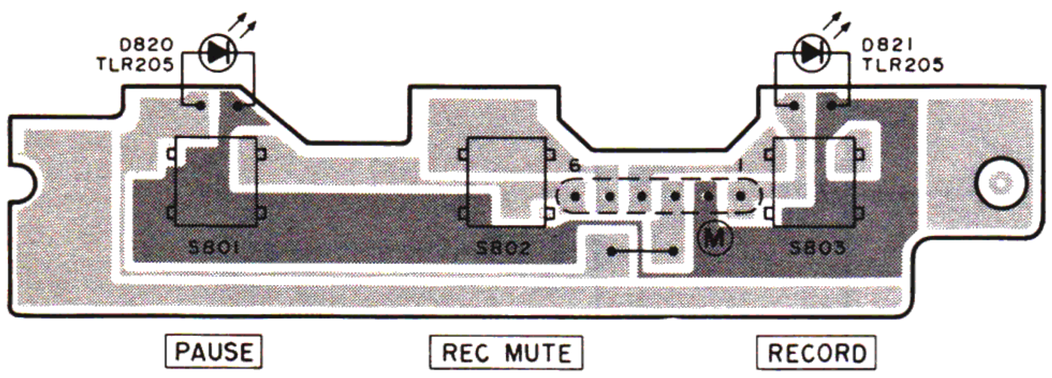

OUTPUT VR PCB ASSY (V-530X)

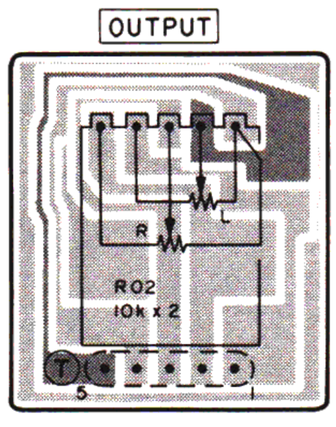

TIMER SWITCH PCB ASSY (V-530X)

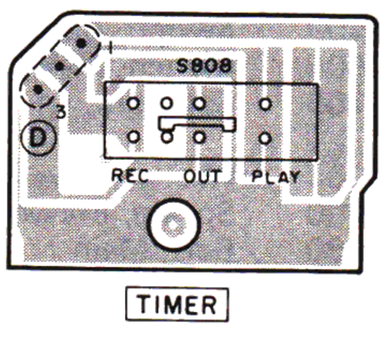

REC VR PCB ASSY (V-530X)

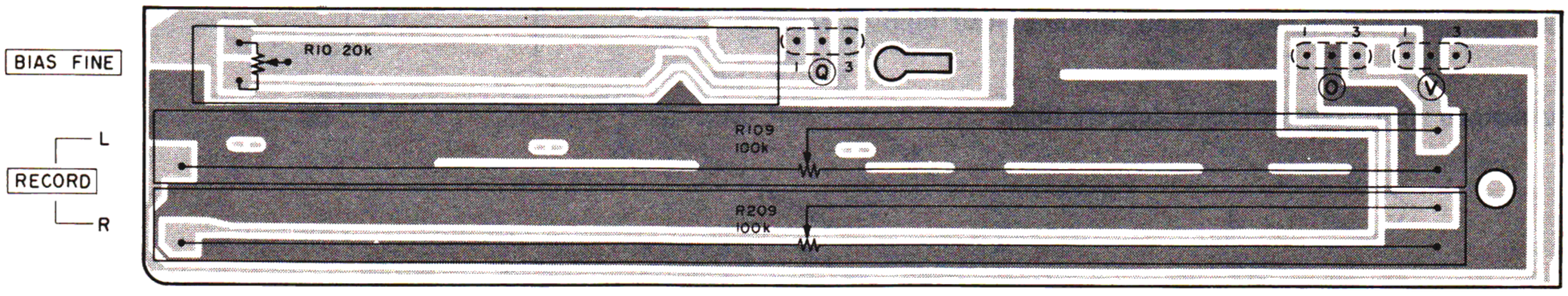

www.hifiengine.com

MAIN PCB ASSY (V-530X)

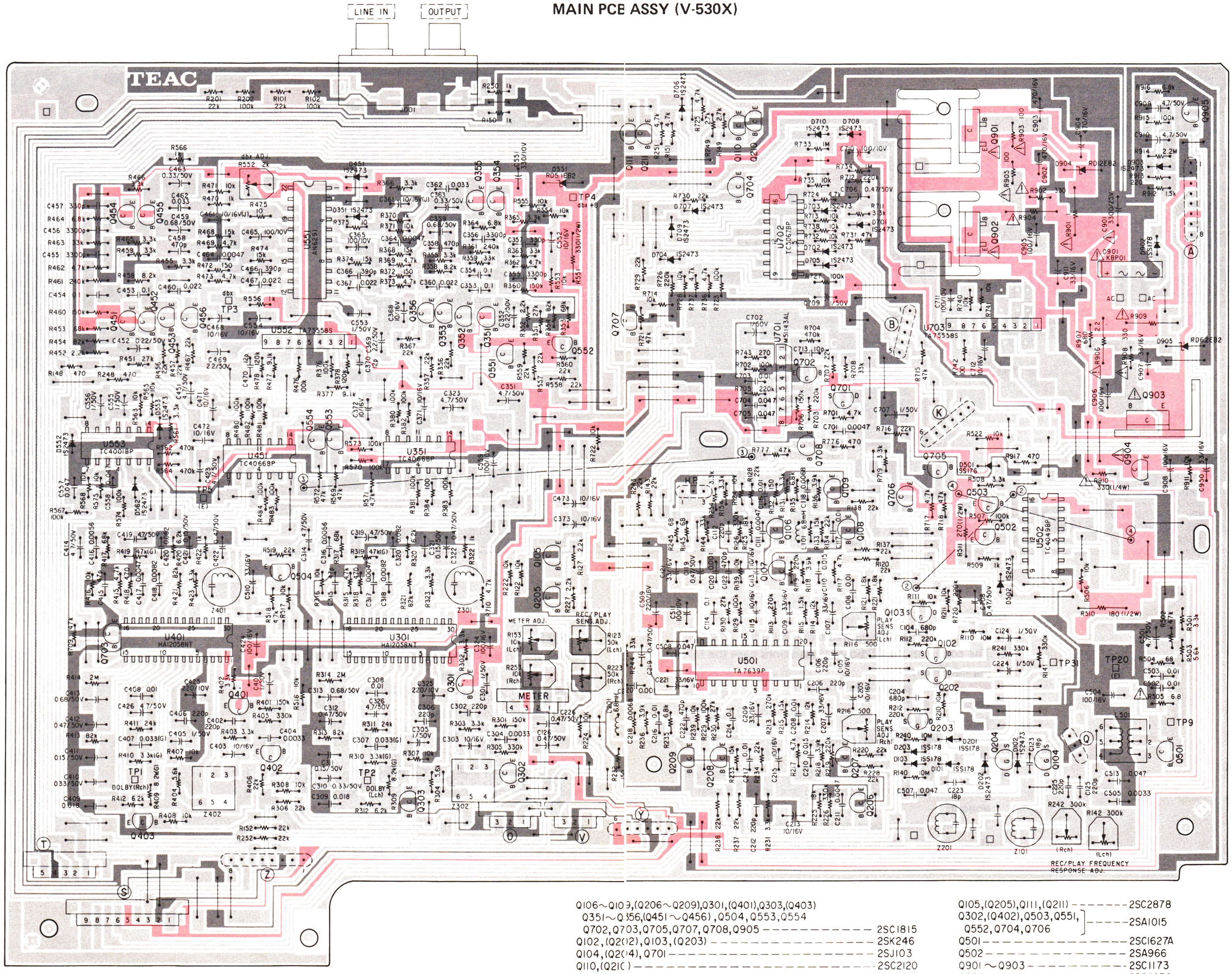

Q106～Q109,(Q206～Q209),Q301,(Q401),Q303,(Q403)
Q351～Q356,(Q451～Q456),Q504,Q553,Q554
Q702,Q703,Q705,Q707,Q708,Q905 ---------- 2SC1815
Q102,(Q202),Q103,(Q203) ---------- 2SK246
Q104,(Q204),Q701 ---------- 2SJ103
Q110,(Q210) ---------- 2SC2120
Q103,(Q203) ---------- 2SK117

Q105,(Q205),Q111,(Q211) ---------- 2SC2878
Q302,(Q402),Q503,Q551,
Q552,Q704,Q706 ---------- 2SA1015
Q501 ---------- 2SC1627A
Q502 ---------- 2SA966
Q901～Q903 ---------- 2SC1173
Q904 ---------- 2SC2236

SWITCH PCB ASSY (V-530X)

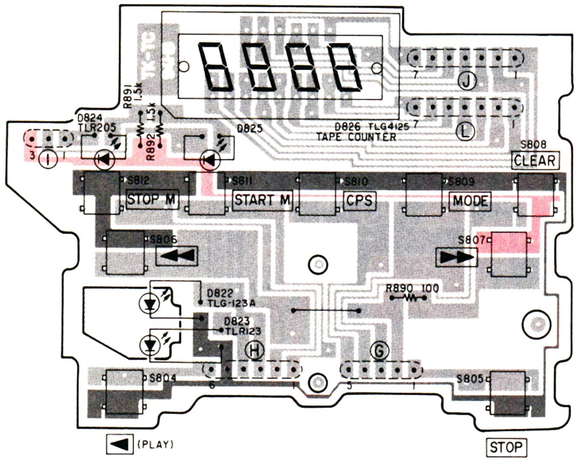

LOGIC PCB ASSY (V-530X)

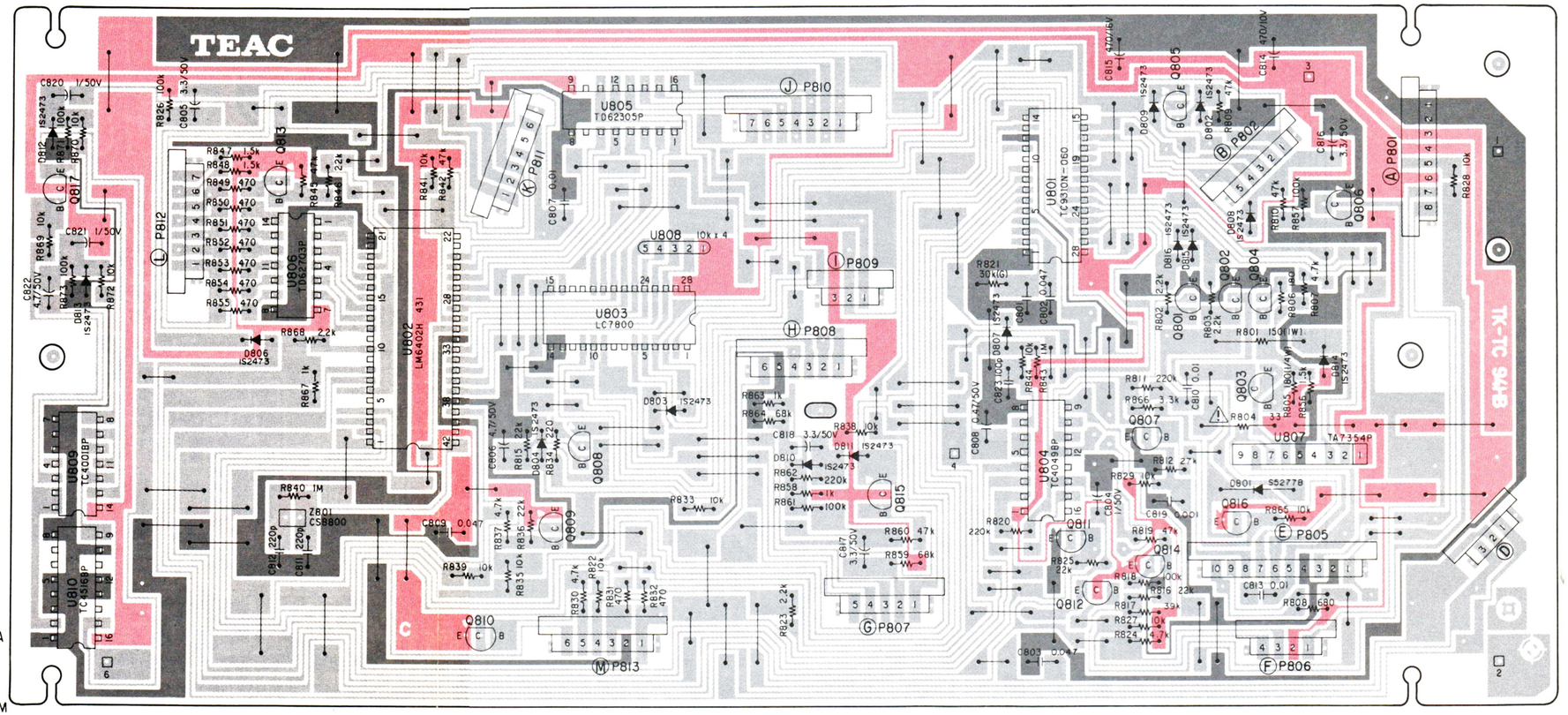

Q801,Q802 ---------- 2SC1959
Q803 ---------- 2SC1627A
Q804,Q807,Q811,Q812,Q815,Q817 ------ 2SC1815
Q805,Q808～Q810,Q813,Q814 ------- 2SA1015
Q806 ---------- 2SD1140
Q816 ---------- 2SA562TM

NOTES

1. PC boards are shown viewed from foil side.
2. The colors on the PC board illustrations have the following significance:
   - : +B power supply circuit
   - : GND
   - : other
3. Resistor values are in ohms (k = kilo-ohms, M = meg-ohms).
4. All capacitor values are in microfarads (p = picofarads).
5. ⚠ Parts marked with this sign are safety critical components.
   They must always be replaced with identical components. Refer to the appropriate parts list to ensure exact replacement.

注

1. 基板図はパターン面が示されています。
2. プリント・パターンは次のように色別されています。
   - ：＋B電源回路
   - ：GND
   - ：その他の回路
3. 抵抗の単位はΩ(k＝kΩ，M＝MΩ)です。
4. コンデンサの単位はμF(p＝pF)です。
5. ⚠マークのある部品は安全重要部品です。
   交換するときは必ずティアック指定の部品を使用してください。

MAIN PCB ASSY (V-430X)

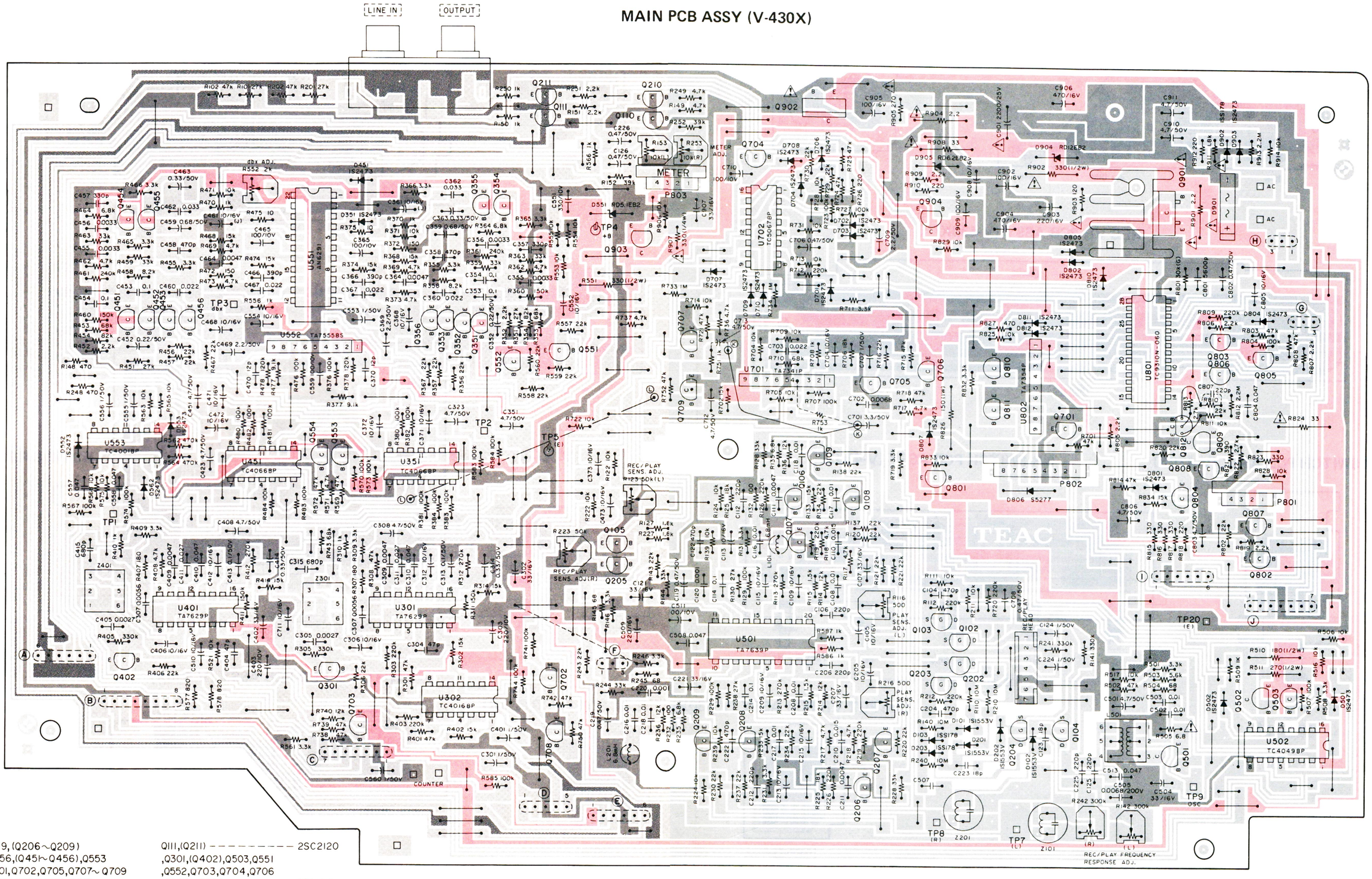

Q106~Q109,(Q206~Q209)
,Q351~Q356,(Q451~Q456),Q553
,Q554,Q701,Q702,Q705,Q707~Q709
,Q802,Q803,Q808,Q811,Q812
----2SC1815
Q102,Q103,(Q202,Q203)---2SK246
Q104,(Q204),---------2SJ103
Q105,(Q205),Q110,(Q210)----2SC2878

Q111,(Q211)---------2SC2120
,Q301,(Q402),Q503,Q551
,Q552,Q703,Q704,Q706
,Q804~Q806---------2SA1015
Q501,Q809,Q904-----2SC1627A
Q502----------2SA966
Q801----------2SA562TM
Q807,Q810---------2SC1959
Q901,Q902---------2SC1173
Q903----------2SC2236

NR LED PCB ASSY (V-430X)

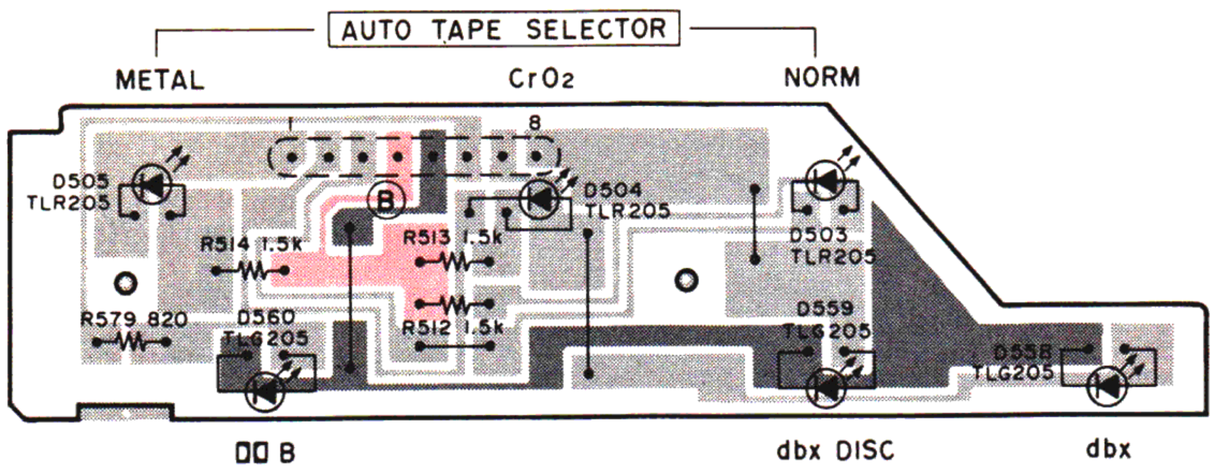

TIMER SWITCH PCB ASSY (V-430X)

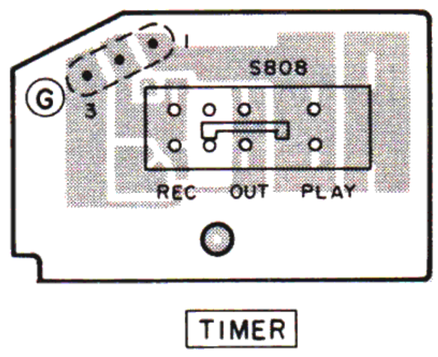

REC VR PCB ASSY (V-430X)

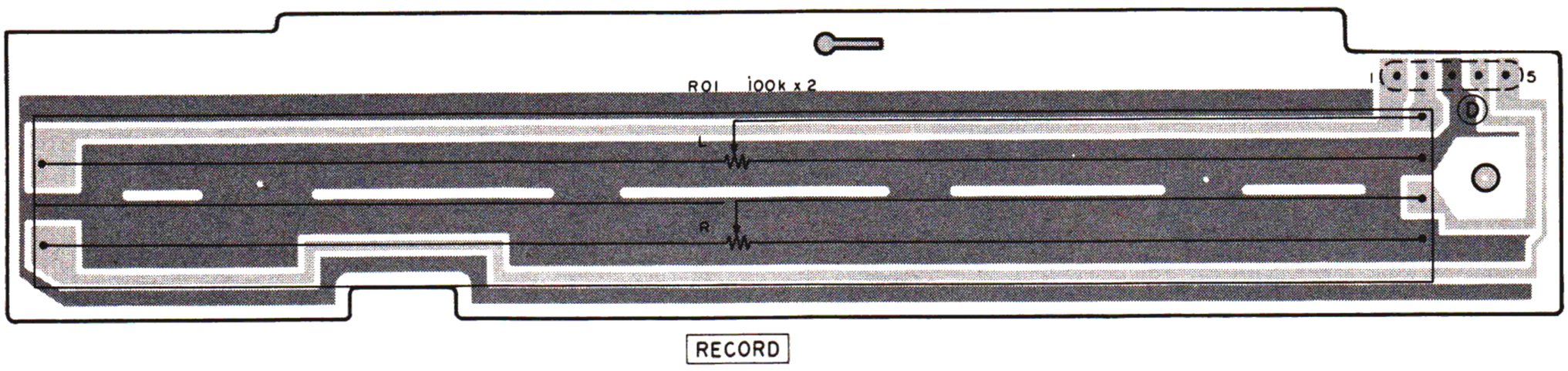

POWER SWITCH PCB ASSY (V-430X)

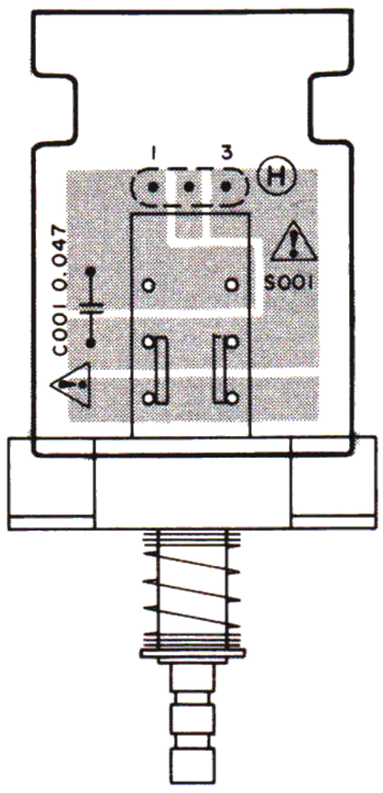

NR SWITCH PCB ASSY (V-430X)

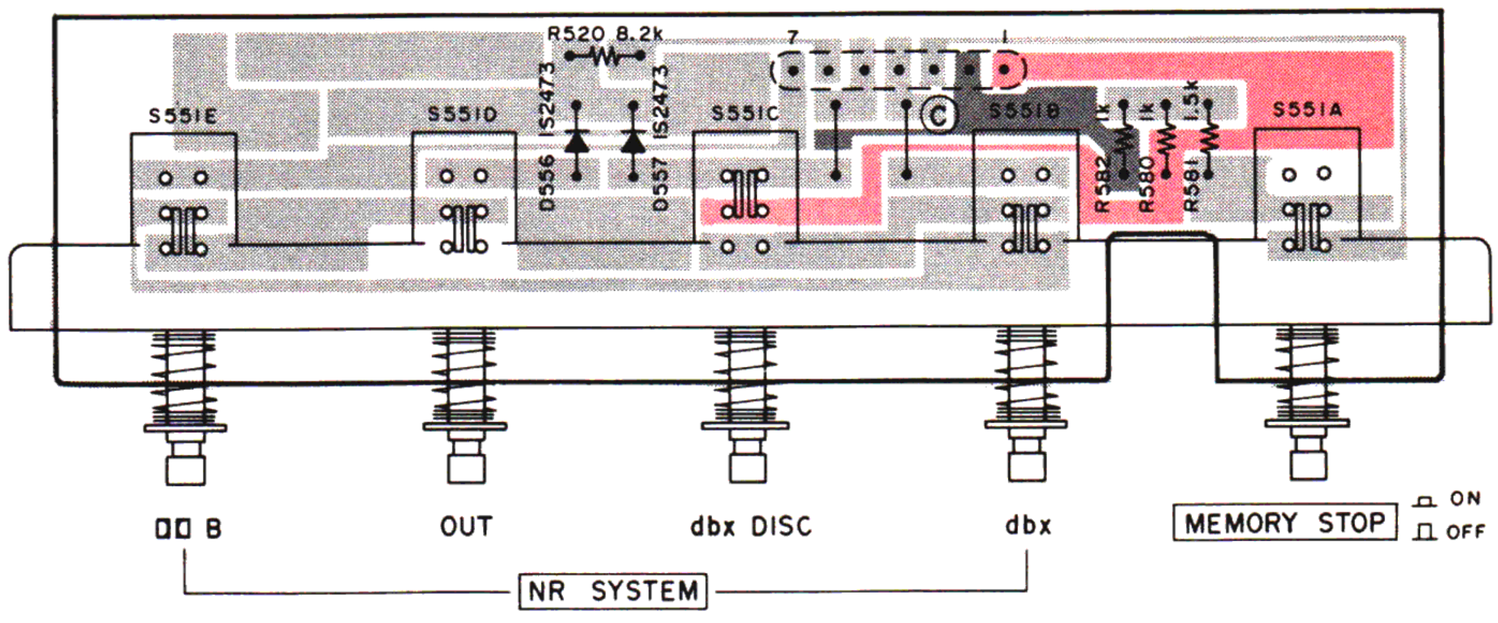

OUTPUT VR PCB ASSY (V-43

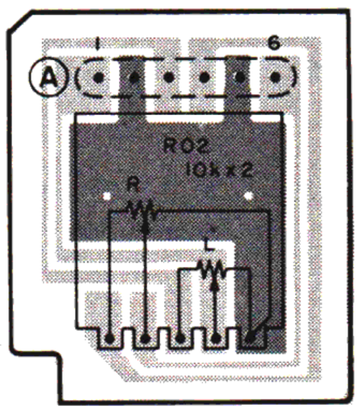

www.hifiengine.com

SWITCH PCB ASSY (V-430X)

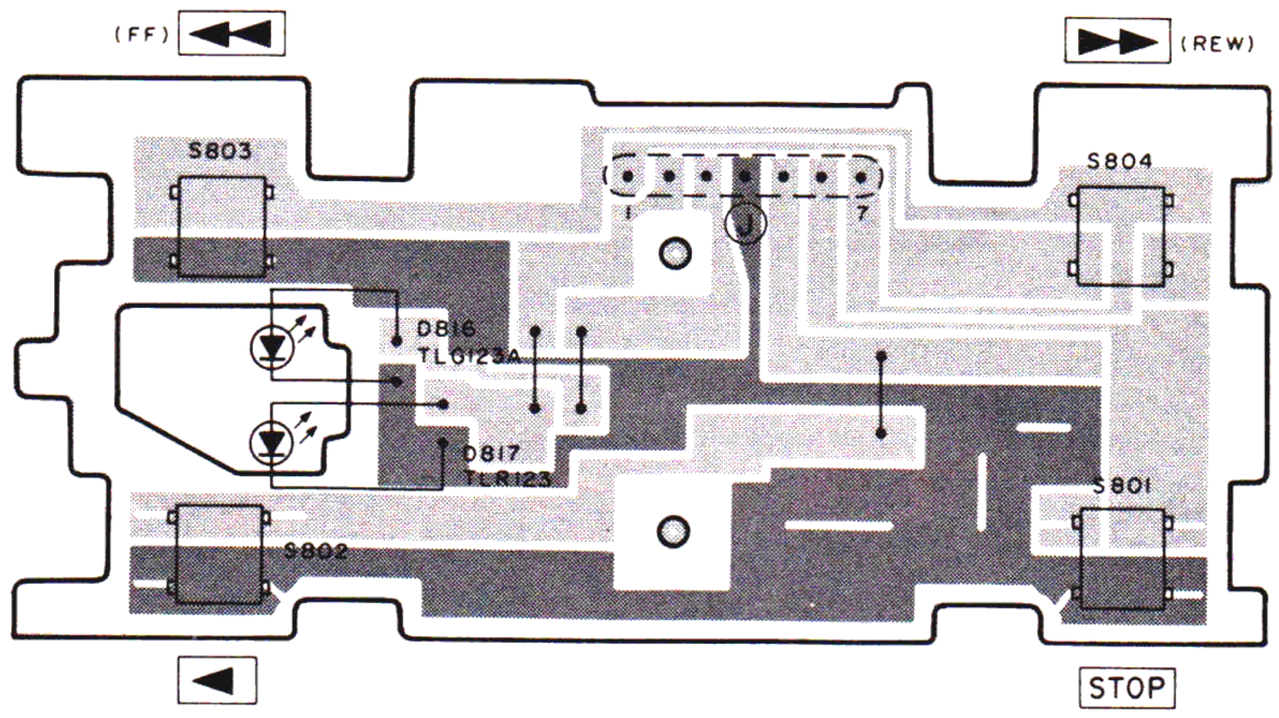

MIC AMPL. PCB ASSY (V-430X)

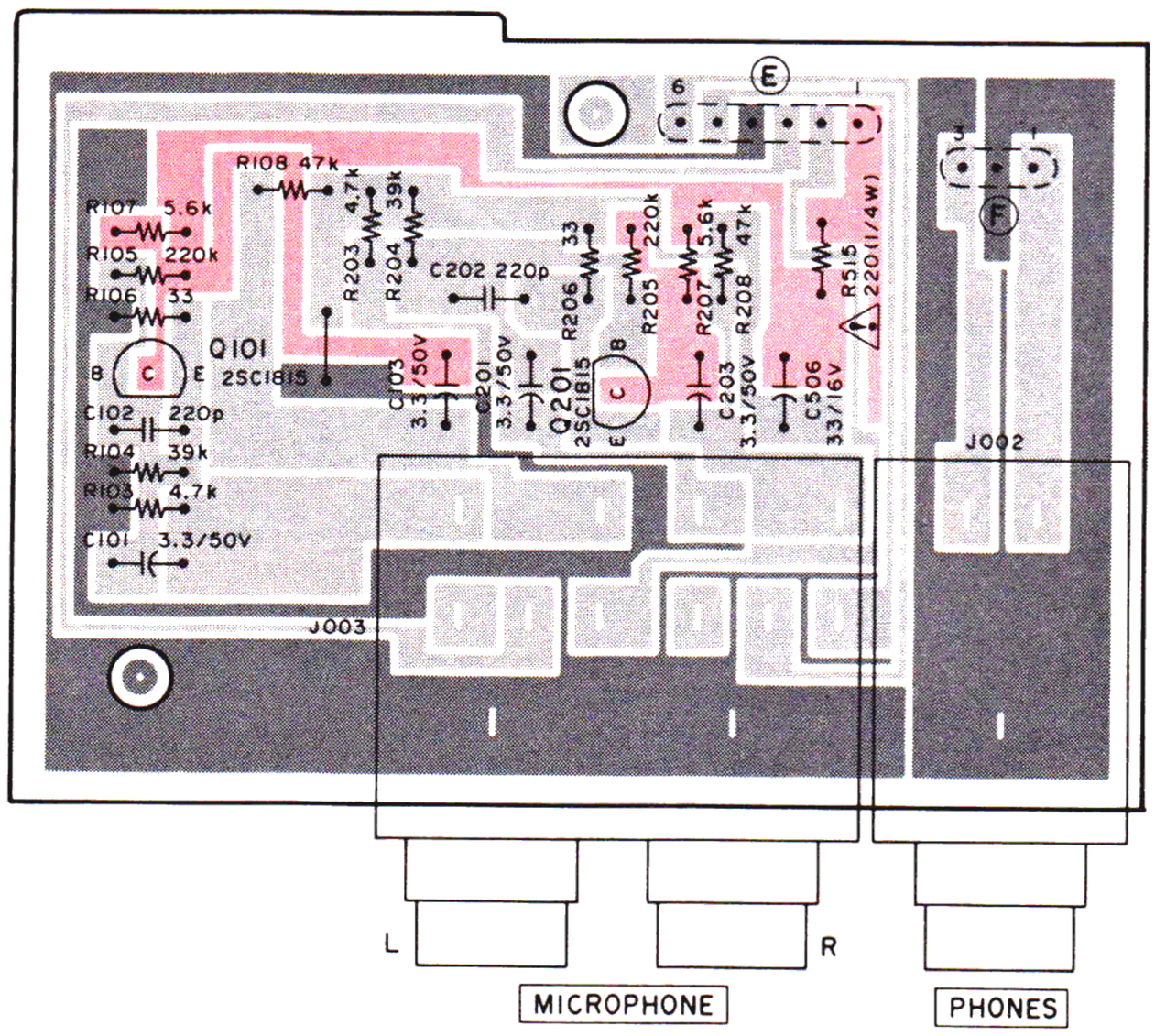

SWITCH & LED PCB ASSY (V-430X)

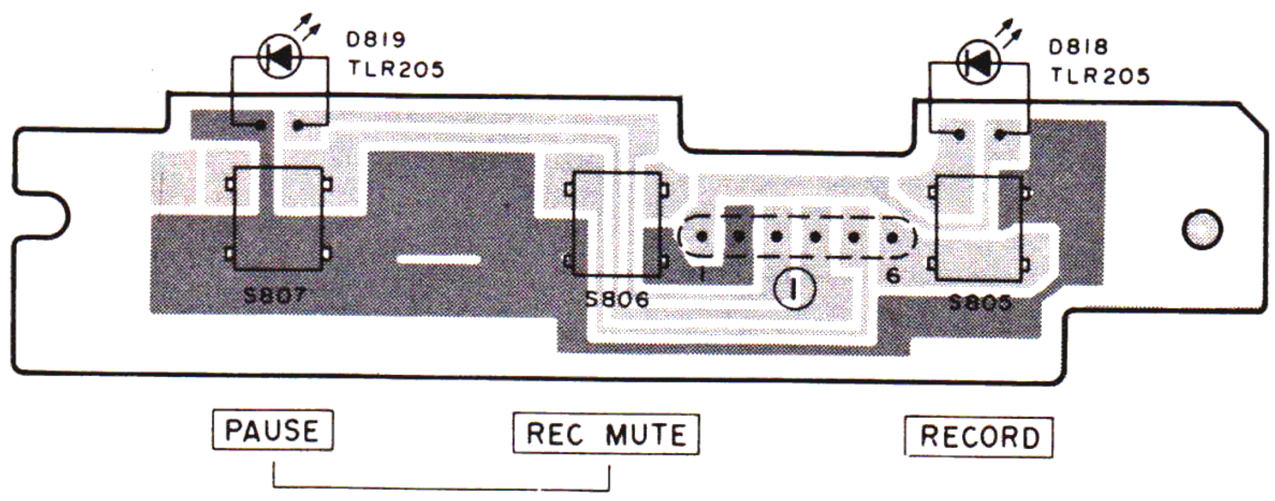

www.hifiengine.com

Amplifier Section (V-530X)

REF. NO.	PARTS NO.	DESCRIPTION
	*5760770000	PCB Assy
	*5760672400	PCB
MAIN PCB ASSY		
	IC's	
U301/U401	5760670400	HA12058NT
U351/U451	5220013400	TC4066BP
U501	5760669800	TA7639P
U502	5220020000	TC4049BP
U551	5220423100	AN6291
U552, U703	5760669600	TA75558S
U553	5220019000	TC4001BP
U701	5220021500	M51143AL-MQS
U702	5760722900	TC5067BP
	TRANSISTORS	
Q102/Q202	5232005200	FET, 2SK246-GR
Q103/Q203	5232005800	FET, 2SK117-GR
Q104/Q204	5760667500	FET, 2SJ103-GR
Q105/Q205	5230774900	2SC2878-A
Q106/Q206	5145151000	2SC1815NEW-GR
Q107/Q207	5145151000	2SC1815NEW-GR
Q108/Q208	5145151000	2SC1815NEW-GR
Q109/Q209	5145151000	2SC1815NEW-GR
Q110/Q210	5230777700	2SC2120-Y
Q111/Q211	5230774900	2SC2878-A
Q301/Q401	5145151000	2SC1815NEW-GR
Q302/Q402	5145150000	2SA1015-GR
Q303/Q403	5145151000	2SC1815NEW-GR
Q351/Q451	5145151000	2SC1815NEW-GR
Q352/Q452	5145151000	2SC1815NEW-GR
Q353/Q453	5145151000	2SC1815NEW-GR
Q354/Q454	5145151000	2SC1815NEW-GR
Q355/Q455	5145151000	2SC1815NEW-GR
Q356/Q456	5145150000	2SC1815NEW-GR
Q501	5760667700	2SC1627A-Y
Q502	5760668000	2SA966-Y
Q503	5145150000	2SA1015-GR
Q504	5145151000	2SC1815NEW-GR
Q551, Q552	5145150000	2SA1015-GR
Q553, Q554	5145151000	2SC1815NEW-GR
Q701	5760667500	FET, 2SJ103-GR
Q702/Q703	5145151000	2SC1815NEW-GR
Q704	5145150000	2SA1015-GR
Q705	5145151000	2SC1815NEW-GR
Q706	5145150000	2SA1015-GR
Q707, Q708	5145151000	2SC1815NEW-GR
Q901, Q902	⚠5760668100	2SC1173-Y, X, JA
Q903	⚠5760668100	2SC1173-Y, X, JA
Q904	⚠5760667800	2SC2236-Y
Q905	5145151000	2SC1815NEW-GR
	DIODES	
D101/D201	5760668300	1SS178 (TPA4)
D102/D202	5760668300	1SS178 (TPA4)
D103/D203	5760668300	1SS178 (TPA4)
D351/D451	5224012920	1S2473FT
D501, D502	5224012920	1S2473FT

REF. NO.	PARTS NO.	DESCRIPTION
D551	5224540301	Zener, RD5.1EB2FR
D552, D553	5224012920	1S2473FT
D562	5224012920	1S2473FT
D701, D702	5224012920	1S2473FT
D703, D704	5224012920	1S2473FT
D705, D706	5224012920	1S2473FT
D707, D708	5224012920	1S2473FT
D709, D710	5224012920	1S2473FT
D901	⚠5760670300	KBP01
D902	5760668300	1SS178 (TPA4)
D903	5224012920	1S2473FT
D904	5224543101	Zener, RD12EB2FR
D905	5224540901	Zener, RD6.2EB2FR

CARBON RESISTORS

All resistors are rated ±5% tolerance and 1/6 watt unless otherwise noted.

R101/R201	5240031420	22kΩ		
R102/R202	5240033020	100kΩ		
R110/R210	5240177800	10MΩ	1/4W	
R111/R211	5240030620	10kΩ		
R112/R212	5240033820	220kΩ		
R113/R213	5240034020	270kΩ		
R114/R214	5240030820	12kΩ		
R117/R217	5240029820	4.7kΩ		
R118/R218	5240029620	3.9kΩ		
R119/R219	5240033820	220kΩ		
R120/R220	5240031420	22kΩ		
R121/R221	5240028820	1.8kΩ		
R122/R222	5240030620	10kΩ		
R124/R224	5240030620	10kΩ		
R125/R225	5240031220	18kΩ		
R126/R226	5240034220	330kΩ		
R127/R227	5240029020	2.2kΩ		
R128/R228	5240031420	22kΩ		
R129/R229	5240033020	100kΩ		
R130/R230	5240031620	27kΩ		
R131/R231	5240029420	3.3kΩ		
R132/R232	5240026220	150Ω		
R133/R233	5240031020	15kΩ		
R134/R234	5240031420	22kΩ		
R135/R235	5240030220	6.8kΩ		
R136/R236	5240029620	3.9Ω		
R137/R237	5240031420	22kΩ		
R138/R238	5240031420	22kΩ		
R139/R239	5240030620	10kΩ		
R140/R240	5240177800	10MΩ	1/4W	5%
R141/R241	5240034220	330kΩ		
R143/R243	5240031420	22kΩ		
R144/R244	5240031820	33kΩ		
R145/R245	5240025420	68Ω		
R148/R248	5240027420	470Ω		
R149/R249	5240029220	2.7kΩ		
R150/R250	5240028220	1kΩ		
R151/R251	5240029820	4.7kΩ		
R152/R252	5240031420	22kΩ		
R154/R254	5240029420	3.3kΩ		
R301/R401	5240033420	150kΩ		
R302/R402	5240029420	3.3kΩ		
R303/R403	5240029420	3.3kΩ		
R304/R404	5240030020	5.6kΩ		
R305/R405	5240034220	330kΩ		

Parts marked with * require longer delivery time.

www.hifiengine.com

REF. NO.	PARTS NO.	DESCRIPTION		
R306/R406	5240031420	22kΩ		
R307/R407	5240030620	10kΩ		
R308/R408	5240030620	10kΩ		
R309/R409	5240030420	8.2kΩ	1/4W	2%
R310/R410	5240029420	3.3kΩ	1/4W	2%
R311/R411	5240031520	24kΩ	1/4W	
R312/R412	5240030120	6.2kΩ	1/4W	
R313/R413	5240032820	82kΩ		
R314/R414	5240036120	2MΩ	1/4W	
R315/R415	5240029820	4.7kΩ		
R316/R416	5240030620	10kΩ		
R317/R417	5240032620	68kΩ		
R318/R418	5240027420	470Ω		
R319/R419	5240032220	47kΩ	1/4W	2%
R320/R420	5240030120	6.2kΩ	1/4W	
R321/R421	5240032820	82kΩ		
R322/R422	5240028220	1kΩ		
R323/R423	5240029420	3.3kΩ		
R351/R451	5240031620	27kΩ		
R352/R452	5240029020	2.2kΩ		
R353/R453	5240032620	68kΩ		
R354/R454	5240032820	82kΩ		
R355/R455	5240029420	3.3kΩ		
R356/R456	5240031420	22kΩ		
R357/R457	5240031420	22kΩ		
R358/R458	5240030420	8.2kΩ		
R359/R459	5240031820	33kΩ		
R360/R460	5240033420	150kΩ		
R361/R461	5240033920	240kΩ	1/4W	
R362/R462	5240029820	4.7kΩ		
R363/R463	5240031820	33kΩ		
R364/R464	5240030220	6.8kΩ		
R365/R465	5240029420	3.3kΩ		
R366/R466	5240029420	3.3kΩ		
R367/R467	5240031420	22kΩ		
R368/R468	5240031020	15kΩ		
R369/R469	5240029820	4.7kΩ		
R370/R470	5240028220	1kΩ		
R371/R471	5240030620	10kΩ		
R372/R472	5240026220	150Ω		
R373/R473	5240029820	4.7kΩ		
R374/R474	5240031020	15kΩ		
R375/R475	5240023420	10Ω		
R376/R476	5240033020	100kΩ		
R377/R477	5240030520	9.1kΩ	1/4W	
R378/R478	5240033220	120kΩ		
R380/R480	5240033020	100kΩ		
R381/R481	5240033020	100kΩ		
R382/R482	5240033020	100kΩ		
R383/R483	5240033020	100kΩ		
R384/R484	5240033020	100kΩ		
R501	5240029420	3.3kΩ	1/8W	
R502	5240032220	47kΩ		
R503	5240030020	5.6kΩ		
R504	5240025420	68Ω		
R505	⚠5760674700	6.8Ω	1/4W	
R506	5240030620	10kΩ		
R507	5240033020	100kΩ		
R508	5240029420	3.3kΩ		
R509	5240028220	1kΩ		

REF. NO.	PARTS NO.	DESCRIPTION		
R510	5185694000	180Ω	1/2W	
R511	5185698000	270Ω	1/2W	
R516, R517	5240030620	10kΩ		
R518	5240029820	4.7kΩ		
R519	5240031420	22kΩ		
R522	5240030620	10kΩ		
R551	5180070000	330Ω	1/2W	
R553, R554	5240030620	10kΩ		
R555	5240030620	10kΩ		
R556	5240068220	1kΩ	1/4W	2%
R557, R558	5240031420	22kΩ		
R559, R560	5240031420	22kΩ		
R561	5240029420	3.3kΩ		
R562	5240034620	470kΩ		
R563	5240030620	10kΩ		
R564	5240034620	470kΩ		
R565	5240030620	10kΩ		
R566	5240028220	1kΩ		
R567	5240033020	100kΩ		
R568	5240030620	10kΩ		
R569	5240032220	47kΩ		
R570	5240033020	100kΩ		
R571	5240029820	4.7kΩ		
R572	5240032220	47kΩ		
R573, R574	5240033020	100kΩ		
R575	5240030620	10kΩ		
R701	5240029820	4.7kΩ		
R702	5240033020	100kΩ		
R703	5240033820	220kΩ		
R704	5240034620	470kΩ		
R705	5240033820	220kΩ		
R706	5240033420	150kΩ		
R707	5240031420	22kΩ		
R708	5240031820	33kΩ		
R709	5240032220	47kΩ		
R710	5240029820	4.7kΩ		
R711	5240029420	3.3kΩ		
R712	5240033820	220kΩ		
R713, R714	5240030620	10kΩ		
R715	5240032220	47kΩ		
R716	5240031420	22kΩ		
R717	5240029820	4.7kΩ		
R718	5240032220	47kΩ		
R719	5240029420	3.3kΩ		
R720	5240033820	220kΩ		
R721	5240032220	47kΩ		
R722	5240030620	10kΩ		
R723	5240033020	100kΩ		
R724, R725	5240029820	4.7kΩ		
R726	5240033820	220kΩ		
R727	5240033020	100kΩ		
R728	5240030620	10kΩ		
R729, R730	5240031420	22kΩ		
R731	5240032220	47kΩ		
R732	5240030620	10kΩ		
R733, R734	5240035420	1MΩ		
R735	5240030620	10kΩ		
R736, R737	5240029820	4.7kΩ		
R738	5240030620	10kΩ		
R739	5240029820	4.7kΩ		

www.hifiengine.com

REF. NO.	PARTS NO.	DESCRIPTION		
R740, R741	5240030620	10kΩ		
R742	5240025820	100Ω		
R743	5240026820	270Ω		
R751	5240033020	100kΩ		
R776	5240027420	470Ω		
R777	5240032220	47kΩ		
R901 ⚠	5760674400	1Ω	1/4W	
R902 ⚠	5180070000	330Ω	1/2W	
R903 ⚠	5240025820	100Ω		
R904 ⚠	5760674400	1Ω	1/4W	
R905 ⚠	5240025820	100Ω		
R906 ⚠	5760674500	2.2Ω	1/4W	
R907	5240027820	680Ω	1/4W	
R908 ⚠	5180070000	330Ω	1/2W	
R909 ⚠	5760674400	1Ω	1/4W	
R910 ⚠	5240027020	330Ω		
R911	5240030620	10kΩ		
R912	5240028620	1.5kΩ		
R913	5240026620	220Ω		
R914	5240176200	2.2MΩ	1/4W	
R915	5240033020	100kΩ	1/4W	
R916	5240030220	6.8kΩ	1/4W	
R917	5240027420	470Ω	1/4W	

CAPACITORS

REF. NO.	PARTS NO.	DESCRIPTION			
C104/C204	5172220000	Ceramic	470pF	50V	
C105/C205	5260162550	Elec.	10μF	16V	
C106/C206	5172216000	Ceramic	220pF	50V	
C107/C207	5260164250	Elec.	33μF	16V	
C108/C208	5171856000	Mylar	0.01μF	50V	5%
C109/C209	5260164250	Elec.	33μF	16V	
C110/C210	5171860000	Mylar	0.015μF	50V	5%
C111/C211	5170368000	Mylar	0.0047μF	50V	5%
C112/C212	5172216000	Ceramic	220pF	50V	
C113/C213	5260162550	Elec.	10μF	16V	
C114/C214	5171878000	Mylar	0.1μF	50V	5%
C115/C215	5260162550	Elec.	10μF	16V	
C116/C216	5171856000	Mylar	0.01μF	50V	5%
C117/C217	5171856000	Mylar	0.01μF	50V	5%
C118/C218	5171856800	Mylar	0.01μF	100V	5%
C119/C219	5260160550	Elec.	0.47μF	50V	
C120/C220	5172224000	Ceramic	0.001μF	50V	
C121/C221	5260164252	Elec.	33μF	16V	
C122/C222	5170352800	Ceramic	470pF	100V	
C123/C223	5172203000	Ceramic	18pF	50V	
C124/C224	5260160750	Elec.	1μF	50V	
C125/C225	5172216000	Ceramic	220pF	50V	
C126/C226	5260160550	Elec.	0.47μF	50V	
C301/C401	5260160750	Elec.	1μF	50V	
C302/C402	5172216000	Mylar	220pF	50V	
C303/C403	5260162550	Elec.	10μF	16V	
C304/C404	5170364000	Mylar	0.0033μF	50V	5%
C305/C405	5260160750	Elec.	1μF	50V	
C306/C406	5172216000	Ceramic	220pF	50V	
C307/C407	5263104120	Poly.	0.033μF	100V	2%
C308/C408	5171856000	Mylar	0.01μF	50V	5%
C309/C409	5171862000	Mylar	0.018μF	50V	5%
C310/C410	5260220852	Elec.	0.33μF	50V	
C311/C411	5260220652	Elec.	0.15μF	50V	
C312/C412	5260160550	Elec.	0.47μF	50V	
C313/C413	5260221052	Elec.	0.68μF	50V	
C314/C414	5260162150	Elec.	4.7μF	50V	
C315/C415	5172208000	Ceramic	47pF	50V	5%
C316/C416	5170370000	Mylar	0.0056μF	50V	5%
C317/C417	5173432000	Ceramic	0.0047μF	50V	
C318/C418	5170374000	Mylar	0.0082μF	50V	5%
C319/C419	5260162150	Elec.	4.7μF	50V	
C320/C420	5263105110	Poly.	0.082μF	100V	5%
C321/C421	5260220652	Elec.	0.15μF	50V	
C322/C422	5260160550	Elec.	0.47μF	50V	
C323/C423	5260162150	Elec.	4.7μF	50V	
C324/C424	5260166052	Elec.	100μF	16V	
C325/C425	5260166852	Elec.	220μF	10V	
C326/C426	5260162150	Elec.	4.7μF	50V	
C351/C451	5260162150	Elec.	4.7μF	50V	
C352/C452	5260210650	Elec.	0.22μF	50V	
C353/C453	5171878000	Mylar	0.1μF	50V	5%
C354/C454	5171878000	Mylar	0.1μF	50V	5%
C355/C455	5170364000	Mylar	0.0033μF	50V	5%
C356/C456	5170364000	Mylar	0.0033μF	50V	5%
C357/C457	5263106620	Poly.	330pF	50V	5%
C358/C458	5263107020	Poly.	470pF	50V	5%
C359/C459	5260210050	Elec.	0.68μF	50V	
C360/C460	5171864000	Mylar	0.022μF	50V	5%
C361/C461	5260162550	Elec.	10μF	16V	
C362/C462	5171868000	Mylar	0.033μF	50V	5%
C363/C463	5260210850	Elec.	0.33μF	50V	
C364/C464	5170368000	Mylar	0.0047μF	50V	5%
C365/C465	5260165952	Elec.	100μF	10V	
C366/C466	5263106820	Poly.	390pF	50V	5%
C367/C467	5171864000	Mylar	0.022μF	50V	5%
C368/C468	5260162550	Elec.	10μF	16V	
C369/C469	5260161150	Elec.	2.2μF	50V	
C370/C470	5172201000	Ceramic	12pF	50V	5%
C371/C471	5260162550	Elec.	10μF	16V	
C372/C472	5260162550	Elec.	10μF	16V	
C373/C473	5260162550	Elec.	10μF	16V	
C501	5260162150	Elec.	4.7μF	50V	
C502, C503	5171856000	Mylar	0.01μF	50V	5%
C504	5260166052	Elec.	100μF	16V	
C505	5263101720	Poly.	0.0033μF	100V	5%
C507, C508	5173435000	Ceramic	0.047μF	50V	
C509	5173054800	Elec.	220μF	16V	
C510	5260164252	Elec.	33μF	16V	
C511	5260165952	Elec.	100μF	10V	
C513	5173435000	Ceramic	0.0047μF	50V	
C514	5260166052	Elec.	100μF	16V	
C551	5173063000	Elec.	330μF	10V	
C552	5260162550	Elec.	10μF	16V	
C553	5260160750	Elec.	1μF	50V	
C554	5260162550	Elec.	10μF	16V	
C555, C556	5260160750	Elec.	1μF	50V	
C557, C558	5173435000	Ceramic	0.047μF	50V	
C559	5260165952	Elec.	100μF	10V	
C701	5173432000	Ceramic	0.0047μF	50V	
C702	5260160750	Elec.	1μF	50V	
C703	5263166723	Mylar	0.01μF	25V	
C704, C705	5173435000	Ceramic	0.047μF	50V	
C706	5260160550	Elec.	0.47μF	50V	
C707	5260160750	Elec.	1μF	50V	

www.hifiengine.com

REF. NO.	PARTS NO.	DESCRIPTION			
C708	5260160550	Elec.	0.47=F	50V	
C709	5260160750	Elec.	1μF	50V	
C710, C711	5260165952	Elec.	100μF	10V	
C712	5260162550	Elec.	10μF	16V	
C713	5172200000	Ceramic	10pF	50V	0.5%
C751, C752	5260164252	Elec.	33μF	16V	
C901 ⚠	5173094000	Elec.	3300μF	25V	
C902, C903	5173072000	Elec.	470μF	16V	
C904	5173072000	Elec.	470μF	16V	
C905	5260166052	Elec.	100μF	16V	
C906	5260165952	Elec.	100μF	16V	
C907	5260164252	Elec.	33μF	16V	
C908	5260165952	Elec.	100μF	16V	
C909, C910	5260162150	Elec.	4.7μF	50V	
C911, C950	5260164252	Elec.	33μF	16V	

VARIABLE RESISTORS

R116/R216	5280020500	Semi-fixed,	470Ω (B)
R123/R223	5280021700	Semi-fixed,	47kΩ (B)
R142/R242	5280022200	Semi-fixed,	330kΩ (B)
R153/R253	5280021300	Semi-fixed,	10kΩ (B)
R552	5280021000	Semi-fixed,	3.3kΩ (B)

COILS

L101/L201	5760674200	Choke, 6.8mH
L501	5760674300	Bias OSC
Z101/Z201	5760670600	Bias Trap

CONNECTORS

5760671200	7P
5760671200	Socket, Jump
5760670600	Socket, Jump
5760671800	Socket, Jump

MISCELLANEOUS

Z301/Z401	5760670700	Filter, Dolby C
Z302/Z402	5760670800	Filter, Dolby
J001	5760672100	Jack, US-4P

MIC AMPL. PCB ASSY

TRANSISTORS

Q101/Q201	5230770400	2SC1815NEW-BL

CARBON RESISTORS

All resistors are rated ±5% tolerance and 1/6 watt unless otherwise noted.

R200 ⚠	5240026620	220Ω	1/4W
R103/R203	5240029820	4.7kΩ	
R104/R204	5240032020	39kΩ	
R105/R205	5240033820	220kΩ	
R106/R206	5240024620	33Ω	
R107/R207	5240030020	5.6kΩ	
R108/R208	5240032220	47kΩ	

REF. NO.	PARTS NO.	DESCRIPTION		

CAPACITORS

C101/C201	5260161550	Elec.	3.3μF	50V
C102/C202	5172216000	Ceramic	220pF	50V
C103/C203	5260161550	Elec.	3.3μF	50V
C506	5260164252	Elec.	33μF	16V

MISCELLANEOUS

J002	5760673400	Jack, PHONES
J003	5760673300	Jack, MIC x 2

NR SWITCH PCB ASSY

DIODES

D554, D555	5224012920	1S2473FT
D556, D557	5224012920	1S2473FT

RESISTORS

All resistors are rated ±5% tolerance and 1/6 watt.

R520	5240030620	10kΩ
R521	5240030820	12kΩ
R576	5240030220	6.8kΩ

CAPACITOR

C512	5260162550	Elec.	10μF	16V

MISCELLANEOUS

S001 ~ S005	5760672800	Switch, Push

NR LED PCB ASSY

DIODES

D503, D504	5760668800	LED, TLR205
D505	5760668800	LED, TLR205
D558, D559	5760669000	LED, TLG205-F
D560, D561	5760669000	LED, TLG205-F

RESISTORS

All resistors are rated ±5% tolerance and 1/6 watt.

R512, R513	5240028620	1.5kΩ
R514	5240028620	1.5kΩ
R577, R578	5240028020	820Ω
R579, R580	5240028020	820Ω

REC VR PCB ASSY

R109/R209	5760725000	Var. Res., Slide; 100kΩ (B) x 2
R10	5760724200	Var. Res., Slide; 20kΩ (B)

OUTPUT VR PCB ASSY

R02	5760725100	Var. Res., 10kΩ (A) x 2

SWITCH & LED PCB ASSY

D820, D821	5760668800	LED, TLR205
S801, S802	5760672600	Switch, Key
S803	5760672600	Switch, Key

TIMER SWITCH PCB ASSY

S808	5760673000	Switch, Slide

www.hifiengine.com

Control Section (V-530X)

REF. NO.	PARTS NO.	DESCRIPTION
	*5760770100	PCB ASSY
	*5760672500	PCB
	LOGIC PCB ASSY	
	IC's	
U801	5760669900	TC9310N-060
U802	5760670500	LM6402H-431
U803	5220019700	LC7800
U804	5220020000	TC4049BP
U805	5760669200	TD62305P
U806	5760669300	TD62703P
U807	5760669500	TA7354P
U809	5220019000	TC4001BP
U810	5760670100	TC4516BP
	TRANSISTORS	
Q801	5145143000	2SC1959-Y
Q802	5145143000	2SC1959-Y
Q803	5197060000	2SC1627-Y
Q804	5145151000	2SC1815NEW-GR
Q805	5145150000	2SA1015-GR
Q806	5760668200	2SD1140
Q807	5145151000	2SC1815NEW-GR
Q808, Q809	5145150000	2SA1015-GR
Q810	5145150000	2SA1015-GR
Q811, Q812	5145151000	2SC1815NEW-GR
Q813, Q814	5145150000	2SA1015-GR
Q815	5145151000	2SC1815NEW-GR
Q816	5760667900	2SA562TM-Y
Q817	5145151000	2SC1815NEW-GR
	DIODES	
D801	5760668600	S5277B
D802, D803	5224012920	1S2473FT
D804, D805	5224012920	1S2473FT
D806, D807	5224012920	1S2473FT
D808, D809	5224012920	1S2473FT
D810, D811	5224012920	1S2473FT
D812, D813	5224012920	1S2473FT
D814, D815	5224012920	1S2473FT
D816	5224012920	1S2473FT
D817	5760668500	1S1555V, LB-10

RESISTORS

All resistors are rated ±5% tolerance, 1/6 watt and are carbon type unless otherwise noted.

REF NO.	PARTS NO.	DESCRIPTION		
R801	5760723300	150Ω	1W	Metal Film
R802, R803	5240029020	2.2kΩ		
R804 ⚠	5760674600	33Ω	1/4W	
R805	5181464000	180Ω	1/4W	
R806	5240026420	180Ω		
R807	5240029820	4.7kΩ		
R808	5240027820	680Ω		
R809, R810	5240032220	47kΩ		
R811	5240033820	220kΩ		
R812	5240031620	27kΩ		
R815, R816	5240031420	22kΩ		
R817	5240032020	39kΩ		
R818	5240033020	100kΩ		
R819	5240032220	47kΩ		
R820	5240033820	220kΩ		
R821	5240071720	30kΩ	1/4W	2%
R822	5240033420	150kΩ		
R823	5240029020	2.2kΩ		
R824	5240029820	4.7kΩ		
R825	5240031420	22kΩ		
R826	5240033020	100kΩ		
R827, R828	5240030620	10kΩ		
R829	5240030620	10kΩ		
R830	5240029820	4.7kΩ		
R831, R832	5240034620	470Ω		
R833	5240026820	270Ω		
R834	5240026620	220Ω		
R835	5240025820	100Ω		
R836	5240031620	22kΩ		
R837	5240029820	4.7kΩ		
R838, R839	5240030620	10kΩ		
R840	5240035420	1MΩ		
R841	5240030620	10kΩ		
R842	5240032220	47kΩ		
R843	5240035420	1MΩ		
R844	5240030620	10kΩ		
R845	5240032220	47kΩ		
R846	5240031420	22kΩ		
R847, R848	5240028620	1.5kΩ		
R849, R850	5240027420	470Ω		
R851, R852	5240027420	470Ω		
R853, R854	5240027420	470Ω		
R855	5240027420	470Ω		
R856	5240028620	1.5kΩ		
R857	5240033020	100kΩ		
R858	5240028220	1kΩ		
R859	5240032620	68kΩ		
R860	5240032220	47kΩ		
R861	5240033020	100kΩ		
R862	5240033820	220kΩ		
R863	5240028220	1kΩ		
R864	5240032620	68kΩ		
R865	5240030620	10kΩ		
R866	5240029420	3.3kΩ		
R867	5240028220	1kΩ		
R868	5240029020	2.2kΩ		
R869, R870	5240030620	10kΩ		
R871	5240033020	100kΩ		
R872	5240030620	10kΩ		
R873	5240033020	100kΩ		
R875	5240030620	10kΩ	1/4W	
R891, R892	5240028620	1.5kΩ		
R893	5240028220	1kΩ		

CAPACITORS

REF NO.	PARTS NO.	DESCRIPTION			
C801	5170370800	Mylar	0.0056μF	100V	5%
C802, C803	5173435000	Ceramic	0.047μF	50V	
C804	5260160752	Elec.	1μF	50V	
C805	5260161552	Elec.	3.3μF	50V	
C806	5260162152	Elec.	4.7μF	50V	
C807	5173433000	Ceramic	0.01μF	50V	
C808	5260160550	Elec.	0.47μF	50V	
C809	5173435000	Ceramic	0.047μF	50V	
C810	5173433000	Ceramic	0.01μF	50V	
C811, C812	5172216000	Ceramic	220pF	50V	

Parts marked with * require longer delivery time.

www.hifiengine.com

REF NO.	PARTS NO.	DESCRIPTION		
C813	5173433000	Ceramic	0.01μF	50V
C814	5173071800	Elec.	470μF	10V
C815	5173072800	Elec.	470μF	16V
C816, C817	5260161552	Elec.	3.3μF	50V
C818	5260161552	Elec.	3.3μF	50V
C819	5172224000	Ceramic	0.001μF	
C820, C821	5260160752	Elec.	1μF	50V
C822	5260162152	Elec.	4.7μF	50V
C823	5172212000	Ceramic	100pF	50V
C824	5172220000	Ceramic	470pF	50V
C825	5260161552	Elec.	3.3μF	50V
	CONNECTORS			
P801	5760671700	Socket, Jump; 8P		
P802	5760671400	Socket, Jump; 5P		
P804	5760671200	Socket, Jump; 3P		
P805	5760671900	Socket, Jump; 10P		
P806	5760671300	Socket, Jump; 4P		
P807	5760671400	Socket, Jump; 5P		
P808	5760671500	Socket, Jump; 6P		
P809	5760671200	Socket, Jump; 3P		
P810	5760671600	Socket, Jump; 7P		
P811	5760671500	Socket, Jump; 6P		
P812	5760671600	Socket, Jump; 7P		
P813	5760671500	Socket, Jump; 6P		
	MISCELLANEOUS			
Z801	5760670900	X'tal, CSB800		
U808	5760723200	Resistor Array, 10kΩ x 4		
SWITCH PCB ASSY				
	DIODES			
D822	5760668900	LED, TLG123A-F-E/F		
D823	5760668700	LED, TLR123		
D824, D825	5760668800	LED, TLR205		
D826	5760669100	TLG4125, Tape Counter		
	RESISTORS			
R890	5240025820	100Ω		
R891, R892	5240028620	1.5kΩ		
	MISCELLANEOUS			
S804, S805	5760672600	Switch, Key		
S806, S807	5760672600	Switch, Key		
S808, S809	5760672600	Switch, Key		
S810, S811	5760672600	Switch, Key		
S812	5760662600	Switch, Key		

www.hifiengine.com

Amplifier/Control (V-430X)

REF. NO.	PARTS NO.	DESCRIPTION
	*5760770010	PCB Assy
	*5760672300	PCB
MAIN PCB ASS'Y		
	IC's	
U301/U401	5760669700	TA7629P
U302	5760670000	TC4016BP
U351/U451	5220013400	TC4066BP
U501	5760669800	TA7639P
U502	5220020000	TC4049BP
U551	5220423100	AN6291
U552	5760669600	TA75558S
U553	5220019000	TC4001BP
U701	5760669400	TA7341P
U702	5760722900	TC5067BP
U801	5760669900	TC9310N-060
U802	5760669500	TA7354P
	TRANSISTORS	
Q102/Q202	5232005200	FET, 2SK246-GR
Q103/Q203	5232005200	FET, 2SK246-GR
Q104/Q204	5760667500	FET, 2SJ103-GR
Q105/Q205	5230774900	2SC2878-A
Q106/Q206	5145151000	2SC1815NEW-GR
Q107/Q207	5145151000	2SC1815NEW-GR
Q108/Q208	5145151000	2SC1815NEW-GR
Q109/Q209	5145151000	2SC1815NEW-GR
Q110/Q210	5230774900	2SC2878-A
Q111/Q211	5230777700	2SC2120-Y
Q301/Q402	5145150000	2SA1015-GR
Q351/Q451	5145151000	2SC1815NEW-GR
Q352/Q452	5145151000	2SC1815NEW-GR
Q353/Q453	5145151000	2SC1815NEW-GR
Q354/Q454	5145151000	2SC1815NEW-GR
Q355/Q455	5145151000	2SC1815NEW-GR
Q356/Q456	5145150000	2SC1815NEW-GR
Q501	5760667700	2SC1627A-Y
Q502	5760668000	2SA966-Y
Q503	5145150000	2SA1015-GR
Q551/Q552	5145150000	2SA1015-GR
Q553/Q554	5145151000	2SC1815NEW-GR
Q701	5145151000	2SC1815NEW-GR
Q702	5145151000	2SC1815NEW-GR
Q703	5145150000	2SA1015-GR
Q704	5145150000	2SA1015-GR
Q705	5145151000	2SC1815NEW-GR
Q706	5145150000	2SA1015-GR
Q707/Q708	5145151000	2SC1815NEW-GR
Q709	5145151000	2SC1815NEW-GR
Q801	5042352000	2SA562TM-Y
Q802, Q803	5145151000	2SC1815NEW-GR
Q804, Q805	5145150000	2SA1015-GR
Q806	5145150000	2SA1015-GR
Q807	5145143000	2SC1959NEW-Y
Q808	5145151000	2SC1815NEW-GR
Q809	5760667700	2SC1627A-Y
Q810	5145143000	2SC1959NEW-Y
Q811, Q812	5145151000	2SC1815NEW-GR
Q901, Q902 ⚠	5760668100	2SC1173-Y, X, JA
Q903 ⚠	5760667800	2SC2236-Y
Q904	5760667700	2SA1627A-Y

REF. NO.	PARTS NO.	DESCRIPTION
	DIODES	
D101/D201	5760668400	1S1553V
D102/D202	5760668300	1SS178 (TPA4)
D103/D203	5760668300	1SS178 (TPA4)
D351/D451	5224012920	1S2473FT
D501, D502	5224012920	1S2473FT
D551	5224540301	Zener, RD5.1EB2FR
D552, D553	5224012920	1S2473FT
D562	5224012920	1S2473FT
D701, D702	5224012920	1S2473FT
D703, D704	5224012920	1S2473FT
D706	5224012920	1S2473FT
D707, D708	5224012920	1S2473FT
D709, D710	5224012920	1S2473FT
D801, D802	5224012920	1S2473FT
D804, D805	5224012920	1S2473FT
D806	5224012600	S5277
D807, D808	5224012920	1S2473FT
D810, D811	5224012920	1S2473FT
D812	5224012920	1S2473FT
D901 ⚠	5760670300	KBP01
D902 ⚠	5760668300	1SS178 (TPA4)
D903	5224012920	1S2473FT
D904	5224543101	Zener, RD12EB2FR
D905	5224540901	Zener, RD6.2EB2FR

CARBON RESISTORS

All resistors are rated ±5% tolerance and 1/6 watt unless otherwise noted.

R101/R201	5240031620	27kΩ
R102/R202	5240032220	47kΩ
R110/R210	5240177800	10MΩ
R111/R211	5240030620	10kΩ
R112/R212	5240033820	220kΩ
R113/R213	5240034020	270kΩ
R114/R214	5240030820	12kΩ
R115/R215	5240028620	1.5kΩ
R117/R217	5240029820	4.7kΩ
R118/R218	5240029820	4.7kΩ
R119/R219	5240033820	220kΩ
R120/R220	5240031420	22kΩ
R121/R221	5240031420	22kΩ
R122/R222	5240030620	10kΩ
R124/R224	5240030620	10kΩ
R125/R225	5240031220	18kΩ
R126/R226	5240033820	220kΩ
R127/R227	5240028820	1.8kΩ
R128/R228	5240031820	33kΩ
R129/R229	5240033020	100kΩ
R130/R230	5240031620	27kΩ
R131/R231	5240029420	3.3kΩ
R132/R232	5240025820	100Ω
R133/R233	5240031020	15kΩ
R134/R234	5240031420	22kΩ
R135/R235	5240030220	6.8kΩ
R136/R236	5240030820	12kΩ
R137/R237	5240031420	22kΩ
R138/R238	5240031420	22kΩ
R139/R239	5240030620	10kΩ

Parts marked with * require longer delivery time.

www.hifiengine.com

REF. NO.	PARTS NO.	DESCRIPTION		
R140/R240	5240177800	10MΩ	1/4W	5%
R141/R241	5240034220	330kΩ		
R143/R243	5240031420	22kΩ		
R144/R244	5240031820	33kΩ		
R145/R245	5240025420	68Ω		
R146/R246	5240029420	3.3kΩ		
R148/R248	5240027420	470Ω		
R149/R249	5240029820	4.7kΩ		
R150/R250	5240028220	1kΩ		
R151/R251	5240029020	2.2kΩ		
R152/R252	5240032020	39kΩ		
R301/R401	5240032220	47kΩ		
R302/R402	5240031020	15kΩ		
R303/R403	5240033820	220kΩ		
R305/R405	5240034220	330kΩ		
R306/R406	5240031420	22kΩ		
R307/R407	5240026420	180Ω		
R308/R408	5240032220	47kΩ		
R309/R409	5240029420	3.3kΩ		
R310/R410	5240028220	1kΩ		
R311/R411	5240033420	150kΩ		
R312/R412	5240034020	270kΩ		
R314/R414	5240031020	15kΩ		
R351/R451	5240031620	27kΩ		
R352/R452	5240029020	2.2kΩ		
R353/R453	5240032620	68kΩ		
R354/R454	5240032820	82kΩ		
R355/R455	5240029420	3.3kΩ		
R356/R456	5240031420	22kΩ		
R357/R457	5240031420	22kΩ		
R358/R458	5240030420	8.2kΩ		
R359/R459	5240031820	33kΩ		
R360/R460	5240033420	150kΩ		
R361/R461	5240033920	240kΩ	1/4W	
R362/R462	5240039820	4.7kΩ		
R363/R463	5240031820	33kΩ		
R364/R464	5240030220	6.8kΩ		
R365/R465	5240029420	3.3kΩ		
R366/R466	5240029420	3.3kΩ		
R367/R467	5240031420	22kΩ		
R368/R468	5240031020	15kΩ		
R369/R469	5240029820	4.7kΩ		
R370/R470	5240028220	1kΩ		
R371/R471	5240030620	10kΩ		
R372/R472	5240026220	150Ω		
R373/R473	5240029820	4.7kΩ		
R374/R474	5240031020	15kΩ		
R375/R475	5240023420	10Ω		
R376/R476	5240033020	100kΩ		
R377/R477	5240030520	9.1kΩ	1/4W	
R378/R478	5240033220	120kΩ		
R380/R480	5240033020	100kΩ		
R381/R481	5240033020	100kΩ		
R382/R482	5240033020	100kΩ		
R383/R483	5240033020	100kΩ		
R384/R484	5240033020	100kΩ		
R501	5240029420	3.3kΩ	1/8W	
R502	5240032220	47kΩ		
R503	5240030020	5.6kΩ		
R504	5240025420	68Ω		

REF. NO.	PARTS NO.	DESCRIPTION		
R505 ⚠	5760674700	6.8Ω	1/4W	
R506	5240030620	10kΩ		
R507	5240033020	100kΩ		
R508	5240029420	3.3kΩ		
R509	5240028220	1kΩ		
R510	5185694000	180Ω	1/2W	
R511	5185698000	270Ω	1/2W	
R516, R517	5240030620	10kΩ		
R521	5240030620	10kΩ		
R522	5240030620	10kΩ		
R551	5180070000	330Ω	1/2W	
R553, R554	5240030620	10kΩ		
R555	5240030620	10kΩ		
R556	5240068220	1kΩ	1/4W	2%
R557, R558	5240031420	22kΩ		
R559, R560	5240031420	22kΩ		
R561	5240029420	3.3kΩ		
R562	5240034620	470kΩ		
R563	5240030620	10kΩ		
R564	5240034620	470kΩ		
R565	5240030620	10kΩ		
R566	5240028220	1kΩ		
R567	5240033020	100kΩ		
R568	5240030620	10kΩ		
R569	5240032220	47kΩ		
R570	5240033020	100kΩ		
R571	5240029820	4.7kΩ		
R572	5240032220	47kΩ		
R573, R574	5240033020	100kΩ		
R575	5240030620	10kΩ		
R577, R578	5240028020	820Ω		
R583, R584	5240033020	100kΩ		
R585	5240033020	100kΩ		
R586, R587	5240028220	1kΩ		
R701	5240032220	47kΩ		
R702	5240031020	15kΩ		
R704	5240030620	10kΩ		
R705	5240030820	12kΩ		
R706	5240031220	18kΩ		
R707	5240033020	100kΩ		
R708	5240028220	1kΩ		
R709	5240030620	10kΩ		
R710	5240032620	68kΩ		
R711	5240029420	3.3kΩ		
R712	5240033820	220kΩ		
R713, R714	5240030620	10kΩ		
R715	5240032220	47kΩ		
R716	5240031420	22kΩ		
R717	5240032220	47kΩ		
R718	5240032220	47kΩ		
R719	5240029420	3.3kΩ		
R720	5240033820	220kΩ		
R721	5240032220	47kΩ		
R722	5240030620	10kΩ		
R723	5240033020	100kΩ		
R724, R725	5240032220	47kΩ		
R726	5240033820	220kΩ		
R727	5240033020	100kΩ		
R728	5240030620	10kΩ		
R729, R730	5240031420	22kΩ		

www.hifiengine.com

REF. NO.	PARTS NO.	DESCRIPTION	
R731	5240030620	10kΩ	
R733, R734	5240035420	1MΩ	
R736, R737	5240029820	4.7kΩ	
R738	5240029820	4.7kΩ	
R739	5240032220	47kΩ	
R740	5240030820	12kΩ	
R741	5240033020	100kΩ	
R742	5240032220	47kΩ	
R743	5240032620	68kΩ	
R744	5240033020	100kΩ	
R750	5240032220	47kΩ	
R751	5240028220	1kΩ	
R752	5240032220	47kΩ	
R753	5240028220	1kΩ	
R801	5240071720	30kΩ	2%
R802	5240031420	22kΩ	
R803	5240032220	47kΩ	
R804	5240033020	100kΩ	
R805, R806	5240029020	2.2kΩ	
R807	5240029020	2.2kΩ	
R808	5240032220	47kΩ	
R809	5240033820	220kΩ	
R810	5240031420	22kΩ	
R811	5240030620	10kΩ	
R812	5240176200	2.2MΩ	1/4W
R813	5240029220	2.7kΩ	
R814	5240032220	47kΩ	
R815	5240026820	270Ω	
R816, R817	5240027420	470Ω	
R818	5240026620	220Ω	
R819	5240029020	2.2kΩ	
R820	5240031420	22kΩ	
R821	5240027220	390Ω	
R822	5240029820	4.7kΩ	
R823	5240027020	330Ω	
R824	⚠ 5760674600	33Ω	1/4W
R825	5240030620	10kΩ	
R826	5180062000	150Ω	1/2W
R827	5240027420	470Ω	
R828, R829	5240030620	10kΩ	
R832	5240029420	3.3kΩ	
R833	5340030620	10kΩ	
R834	5240031020	15kΩ	
R901	⚠ 5760674500	2.2Ω	1/4W
R902	⚠ 5185700000	330Ω	1/2W
R903	⚠ 5240026020	120Ω	
R904	⚠ 5760674500	2.2Ω	1/4W
R905	⚠ 5240026820	270Ω	
R906	5240030620	10kΩ	
R907	⚠ 5181470000	330Ω	1/4W
R908	⚠ 5760674600	33Ω	1/4W
R909	5240029020	2.2kΩ	
R910	5240026620	220Ω	
R911	5240028820	1.8kΩ	
R912	5240026620	220Ω	
R913	5240176200	2.2MΩ	1/4W
R914	5240030620	10kΩ	

REF. NO.	PARTS NO.	DESCRIPTION			
	CAPACITORS				
C104/C204	5172220000	Ceramic	470pF	50V	
C105/C205	5260162550	Elec.	10μF	16V	
C106/C206	5172216000	Ceramic	220pF	50V	
C107/C207	5260165252	Elec.	47μF	25V	
C108/C208	5171856000	Mylar	0.01μF	50V	5%
C109/C209	5260126550	Elec.	10μF	16V	
C110/C210	5171860000	Mylar	0.015μF	50V	5%
C111/C211	5170368000	Mylar	0.0047μF	50V	5%
C112/C212	5172216000	Ceramic	220pF	50V	
C113/C213	5260162550	Elec.	10μF	16V	
C114/C214	5171878000	Mylar	0.1μF	50V	5%
C115/C215	5260162550	Elec.	10μF	16V	
C116/C216	5171856000	Mylar	0.01μF	50V	5%
C117/C217	5171856000	Mylar	0.01μF	50V	5%
C118/C218	5171862000	Mylar	0.018μF	50V	5%
C119/C219	5260160550	Elec.	0.47μF	50V	
C120/C220	5172224000	Ceramic	0.001μF	50V	
C121/C221	5260164252	Elec.	33μF	16V	
C122/C222	5172220000	Ceramic	470pF	50V	
C123/C223	5172203000	Ceramic	18pF	50V	
C124/C224	5260160750	Elec.	1μF	50V	
C125/C225	5172216000	Ceramic	220pF	50V	
C126/C226	5260160550	Elec.	0.47μF	50V	
C301/C401	5260160750	Elec.	1μF	50V	
C302/C402	5260164252	Elec.	33μF	16V	
C303/C403	5260166852	Elec.	220μF	10V	
C304/C404	5172208000	Ceramic	47pF	50V	5%
C305/C405	5170362000	Mylar	0.0027μF	50V	5%
C306/C406	5260162550	Elec.	10μF	16V	
C307/C407	5170370000	Mylar	0.0056μF	50V	5%
C308/C408	5260162150	Elec.	4.7μF	50V	
C309/C409	5170368000	Mylar	0.047μF	50V	5%
C310/C410	5171872000	Mylar	0.047μF	50V	5%
C311/C411	5171866000	Mylar	0.027μF	50V	5%
C312/C412	5260162550	Elec.	10μF	16V	
C313/C413	5260210450	Elec.	0.1μF	50V	
C314/C414	5260210850	Elec.	0.33μF	50V	
C315/C415	5172222000	Ceramic	680pF	50V	
C323/C423	5260162150	Elec.	4.7μF	50V	
C351/C451	5260162150	Elec.	4.7μF	50V	
C352/C452	5260210650	Elec.	0.22μF	50V	
C353/C453	5171878000	Mylar	0.1μF	50V	5%
C354/C454	5171878000	Mylar	0.1μF	50V	5%
C355/C455	5170364000	Mylar	0.0033μF	50V	5%
C356/C456	5170364000	Mylar	0.0033μF	50V	5%
C357/C457	5263106620	Poly.	330pF	50V	5%
C358/C458	5263107020	Poly.	470pF	50V	5%
C359/C459	5260210050	Elec.	0.68pF	50V	
C360/C460	5171864000	Mylar	0.022μF	50V	5%
C361/C461	5260162550	Elec.	10μF	16V	
C362/C462	5171868000	Mylar	0.033μF	50V	5%
C363/C463	5260210850	Elec.	0.33μF	50V	
C364/C464	5170368000	Mylar	0.0047μF	50V	5%
C365/C465	5260165952	Elec.	100μF	10V	
C366/C466	5263106820	Poly.	390pF	50V	5%
C367/C467	5171864000	Mylar	0.022μF	50V	5%
C368/C468	5260162550	Elec.	10μF	16V	
C369/C469	5260161150	Elec.	2.2μF	50V	
C370/C470	5172201000	Ceramic	12pF	50V	5%
C371/C471	5260162550	Elec.	10μF	16V	

www.hifiengine.com

REF. NO.	PARTS NO.	DESCRIPTION			
C372/C472	5260162550	Elec.	10μF	16V	
C373/C473	5260162550	Elec.	10μF	16V	
C501	5260162150	Elec.	4.7μF	50V	
C502, C503	5171856000	Mylar	0.01μF	50V	5%
C504	5260164252	Elec.	33μF	16V	
C505	5263102520	Poly.	0.0068μF	100V	
C507, C508	5173435000	Ceramic	0.047μF	50V	
C509	5173054800	Elec.	220μF	16V	
C510	5260162550	Elec.	10μF	16V	
C511	5260165952	Elec.	100μF	10V	
C513	5173435000	Ceramic	0.047μF	50V	
C514	5260166052	Elec.	100μF	16V	
C551	5173063000	Elec.	330μF	10V	
C552	5260162550	Elec.	10μF	16V	
C553	5260160750	Elec.	1μF	50V	
C554	5260162550	Elec.	10μF	16V	
C555, C556	5260160750	Elec.	1μF	50V	
C557, C558	5173435000	Ceramic	0.047μF	50V	
C559	5260164252	Elec.	33μF	16V	
C560	5260160750	Elec.	1μF	50V	
C701	5260161550	Elec.	3.3μF	50V	
C702	5170372000	Mylar	0.0068μF		
C703	5171864000	Mylar	0.022μF		
C704	5260162850	Elec.	10μF	50V	
C706	5260160550	Elec.	0.47μF	50V	
C707	5260160750	Elec.	1μF	50V	
C708	5260160550	Elec.	0.47μF	50V	
C709	5260161150	Elec.	2.2μF	50V	
C710	5260165952	Elec.	100μF	10V	
C711	5260162550	Elec.	10μF	16V	
C712, C713	5260162150	Elec.	4.7μF	50V	
C801	5171874000	Mylar	0.0047μF	50V	
C802	5260160550	Elec.	0.47μF	50V	
C803	5260162150	Elec.	4.7μF	50V	
C804	5173432000	Ceramic	4700pF		
C805	5260162550	Elec.	10μF	16V	
C806	5260162150	Elec.	4.7μF	50V	
C807	5172216000	Ceramic	220pF		
C901	⚠ 5173089000	Elec.	2200μF	25V	
C902, C903	5173054800	Elec.	220μF	16V	
C904	5173054800	Elec.	220μF	16V	
C905	5260166052	Elec.	100μF	16V	
C906	5173072000	Elec.	470μF	16V	
C907	5260164252	Elec.	33μF	16V	
C908	5260162550	Elec.	10μF	16V	
C909	5260165952	Elec.	100μF	10V	
C910, C911	5260162150	Elec.	4.7μF	50V	

VARIABLE RESISTORS

R116/R216	5280020500	Semi-fixed,	470Ω	(B)
R123/R223	5280021700	Semi-fixed,	47kΩ	(B)
R142/R242	5280022200	Semi-fixed,	330kΩ	(B)
R153/R253	5280021300	Semi-fixed,	10kΩ	(B)
R552	5280021000	Semi-fixed,	3.3kΩ	(B)

COILS

L101/L201	5760674200	Choke, 6.8mH
L501	5760674300	Bias OSC
Z101/Z201	5760670600	Bias Trap

REF. NO.	PARTS NO.	DESCRIPTION

CONNECTORS

	5760671100	7P
P801, P803	5760671300	Socket, Jump; 4P
P802	5760671700	Socket, Jump; 8P

MISCELLANEOUS

Z301/Z401	5760670800	Filter, Dolby
J001	5760672100	Jack, US-4P

MIC AMPL. PCB ASSY

TRANSISTORS

Q101/Q201	5230770400	2SC1815NEW-BL

CARBON RESISTORS

All resistors are rated ±5% tolerance and 1/6 watt unless otherwise noted.

R515	⚠ 5181466000	220Ω	1/4W
R103/R203	5240029820	4.7kΩ	
R104/R204	5240032020	39kΩ	
R105/R205	5240033820	220kΩ	
R106/R206	5240024620	33Ω	
R107/R207	5240030020	5.6kΩ	
R108/R208	5240032220	47kΩ	

CAPACITORS

C101/C201	5260161550	Elec.	3.3μF	50V
C102/C202	5172216000	Ceramic	220pF	50V
C103/C203	5260161550	Elec.	3.3μF	50V
C506	5260164252	Elec.	33μF	16V

MISCELLANEOUS

J002	5760673400	Jack, PHONES
J003	5760673300	Jack, MIC x 2

NR SWITCH PCB ASSY

DIODES

D556, D557	5224012920	1S2473FT

RESISTORS

All resistors are rated ±5% tolerance and 1/6 watt.

R520	5240030420	8.2kΩ
R580, R581	5240028220	1kΩ
R582	5240028620	1.5kΩ

MISCELLANEOUS

S551A ~ S551E	5760672700	Switch, Push

www.hifiengine.com

REF. NO.	PARTS NO.	DESCRIPTION

NR LED PCB ASSY

DIODES

D503, D504	5760668800	LED, TLR205
D505	5760668800	LED, TLR205
D558, D559	5760669000	LED, TLG205-F
D560	5760669000	LED, TLG205-F

RESISTORS

All resistors are rated ±5% tolerance and 1/6 watt.

R512, R513	5240028620	1.5kΩ
R514	5240028620	1.5kΩ
R579	5240028020	820Ω

REC VR PCB ASSY

R01	5760725000	Var. Res., Slide; 100kΩ (B) x 2

OUTPUT VR PCB ASSY

R02	5760725100	Var. Res., 10kΩ (A) x 2

TIMER SWITCH PCB ASSY

S808	5760673000	Switch, Slide

SWITCH PCB ASSY

DIODES

D816	5225006800	LED, TLG123A
D817	5760668700	LED, TLR123

MISCELLANEOUS

S801, S802	5760672600	Switch, Key
S803, S804	5760672600	Switch, Key

SWITCH & LED PCB ASSY

DIODES

D818, D819	5760668800	LED, TLR205

MISCELLANEOUS

S805, S806	5760672600	Switch, Key
S807	5760672600	Switch, Key

POWER SWITCH PCB ASSY

C001	5760769100	Capacitor, Ceramic; 0.047μF 400V
	5760769200	Capacitor, Ceramic; 0.01μF 250V
S001	5760672900	Switch, Push; POWER

www.hifiengine.com

9 SEMICONDUCTOR ELECTRODES AND IC BLOCK DIAGRAM

半導体の端子外形図及びICブロック・ダイヤグラム

LM6402H-431
(TOP VIEW)

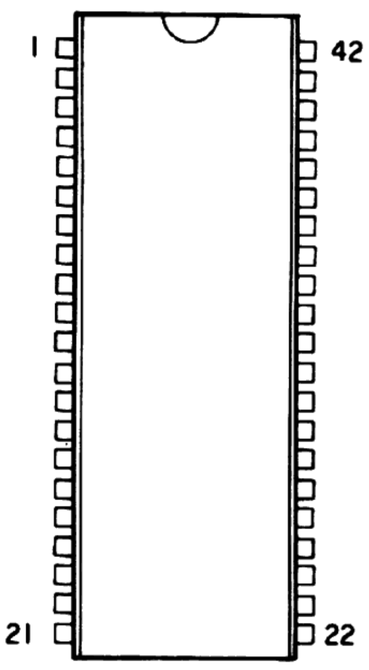

HA12058NT
(TOP VIEW)

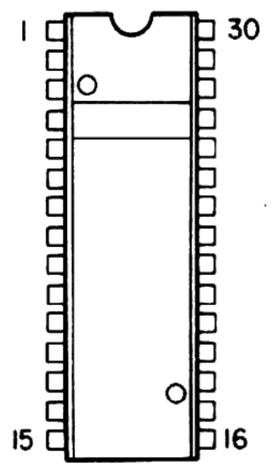

TC9310N-060
(TOP VIEW)

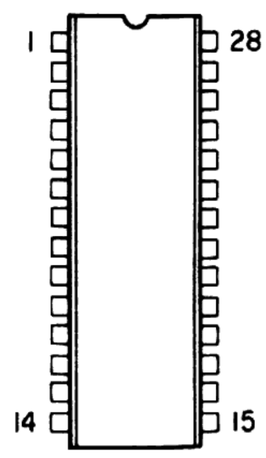

LC7800
(TOP VIEW)

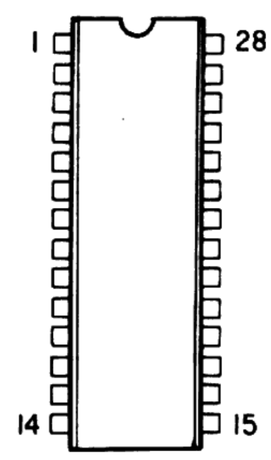

AN6291
(TOP VIEW)

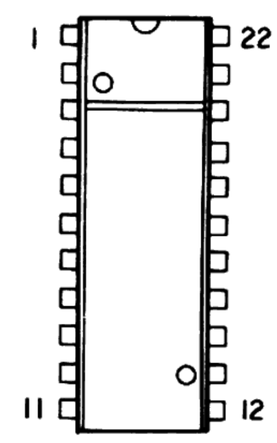

LB1475
(TOP VIEW)

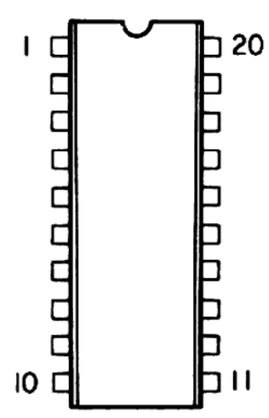

TC4516BP
TA7629P
TC4049BP
TC5067BP
TD62305P
(TOP VIEW)

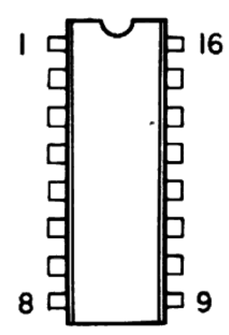

TC4001BP
TC4016BP
TC4066BP
TD62703P
(TOP VIEW)

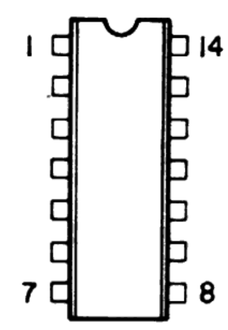

TA7341P
TA7354P
TA75558S

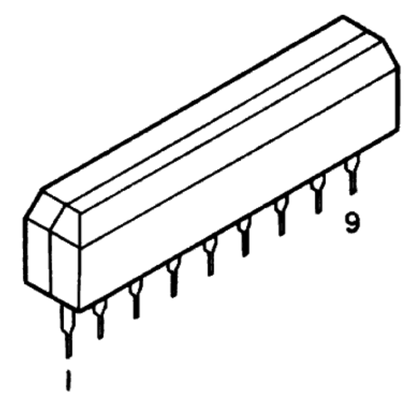

M51143AL-MQS

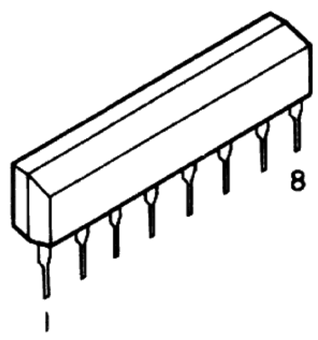

2SC1173

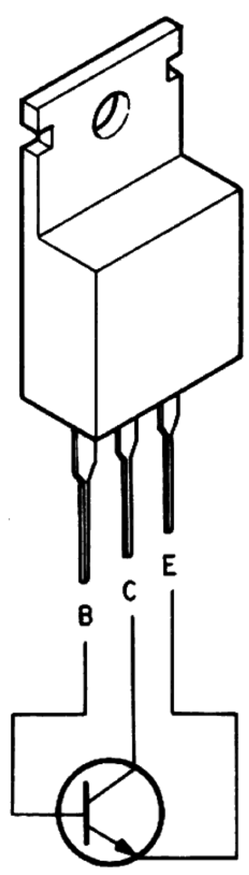

2SC1627A
2SC2236

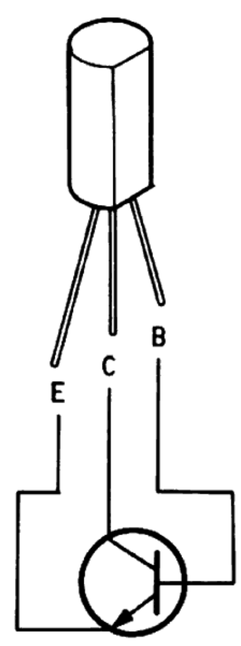

2SD1140

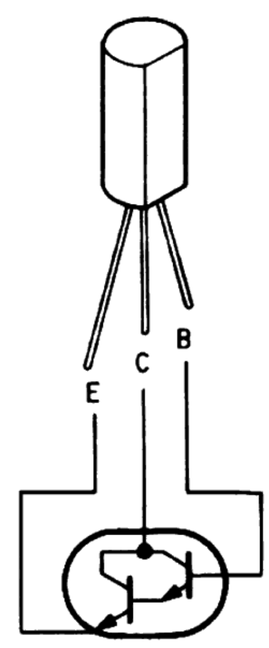

2SA1015
2SC1815
2SC1959
2SC2120
2SC2878

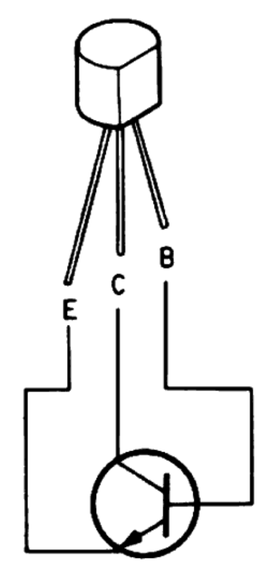

RD5.1EB2FR
RD6.2EB2FR
RD12EB2FR

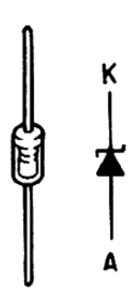

1S2473FT
1SS178
1S1555V

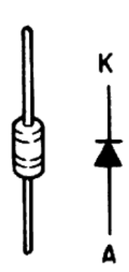

KBP01

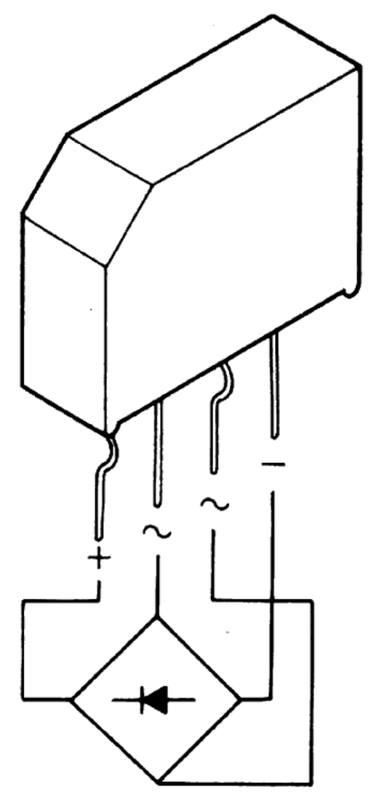

TLR123
TLG123

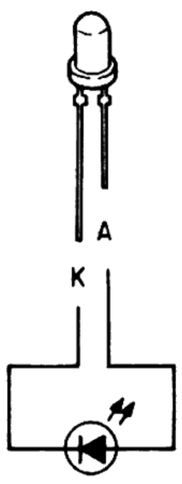

TLR205
TLG205

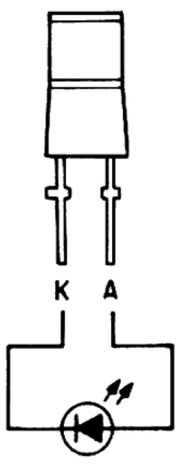

2SA966
2SA562

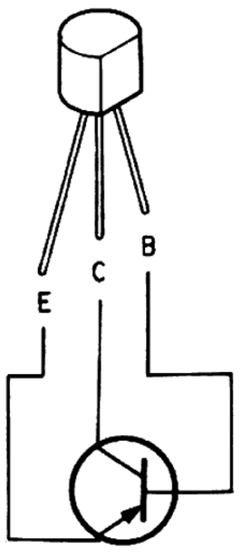

2SK246

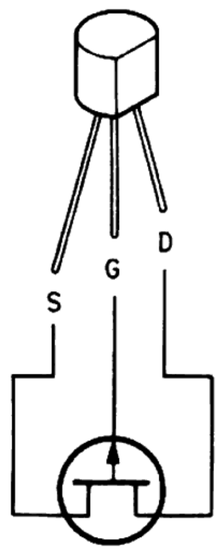

2SJ103

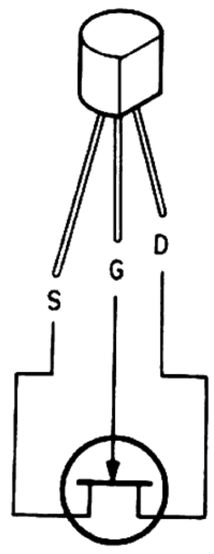

www.hifiengine.com

TC4016BP/TC4066BP

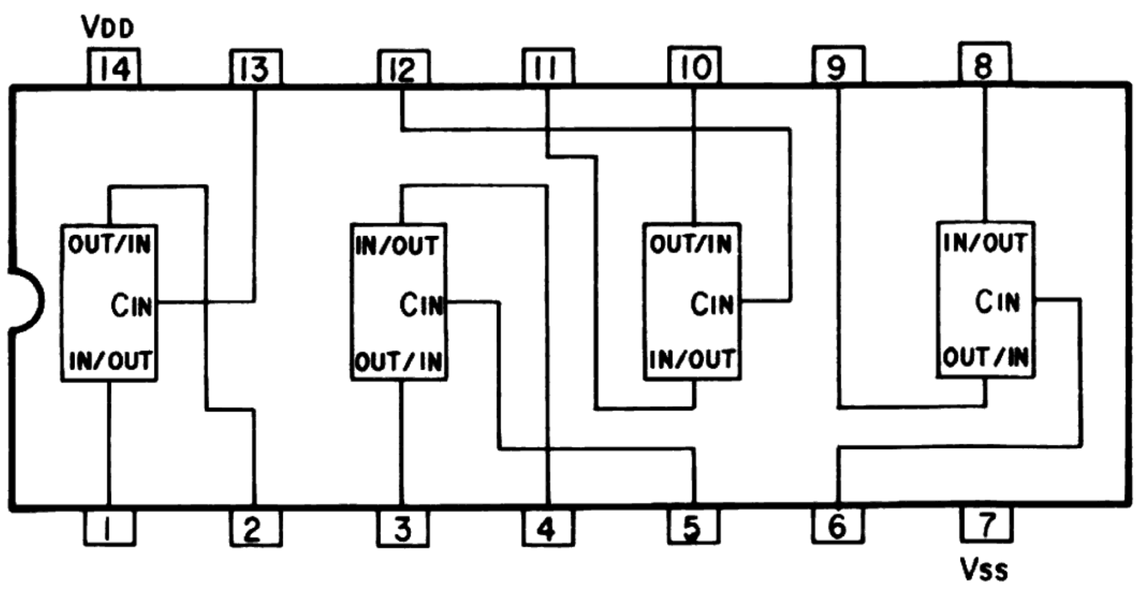

TD62703P

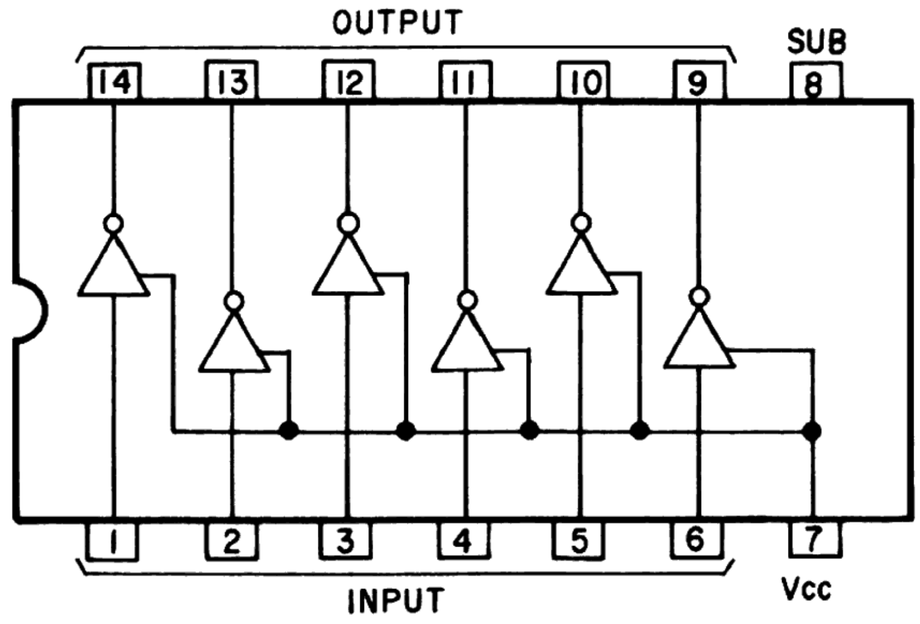

TC4001BP

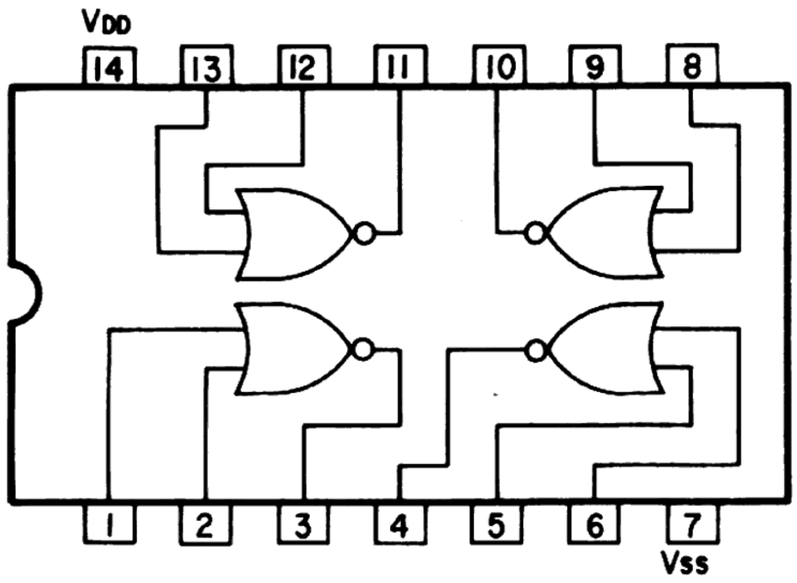

TC4049BP

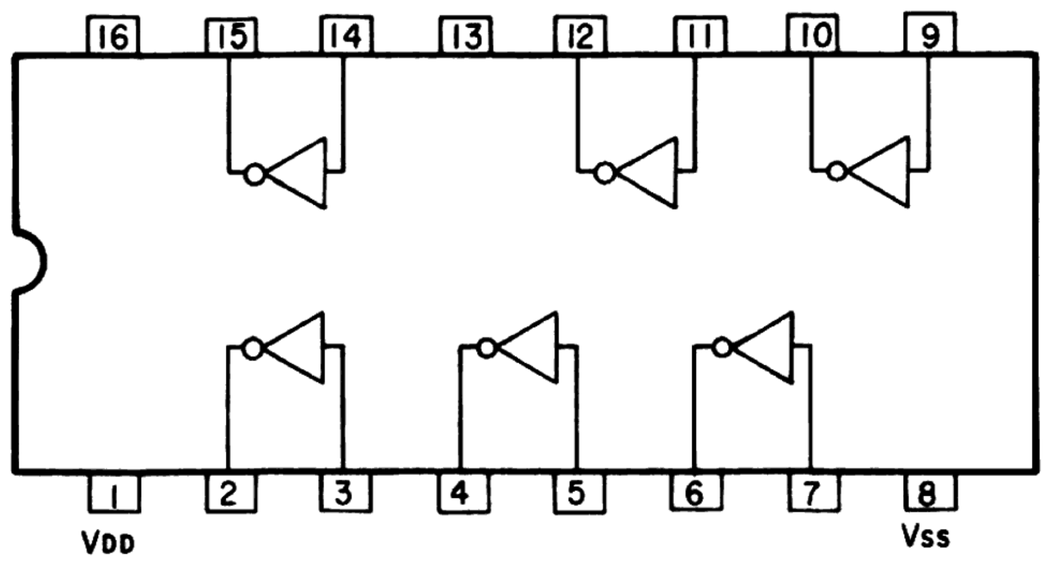

TC4516BP

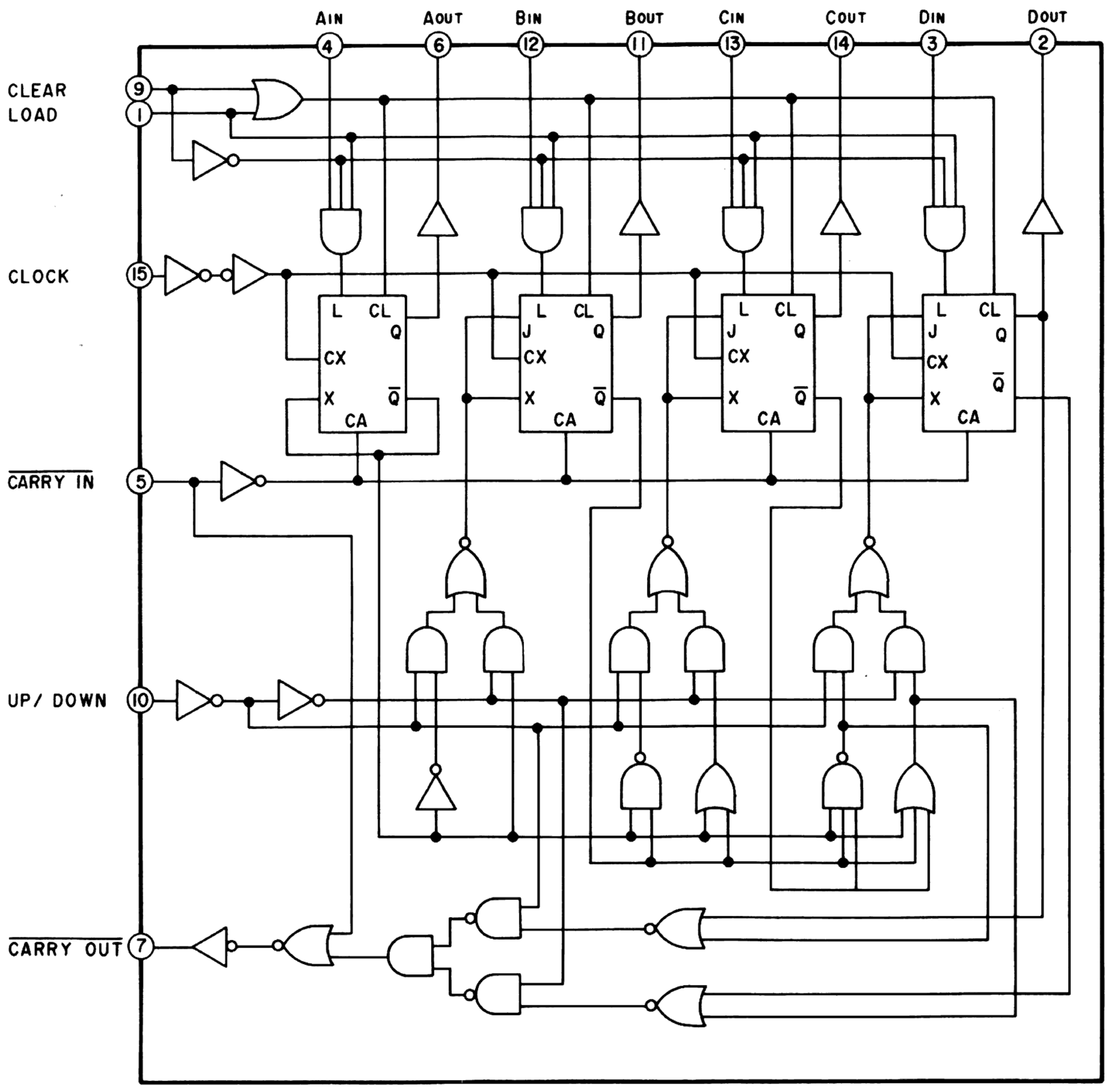

www.hifiengine.com

TC9310N

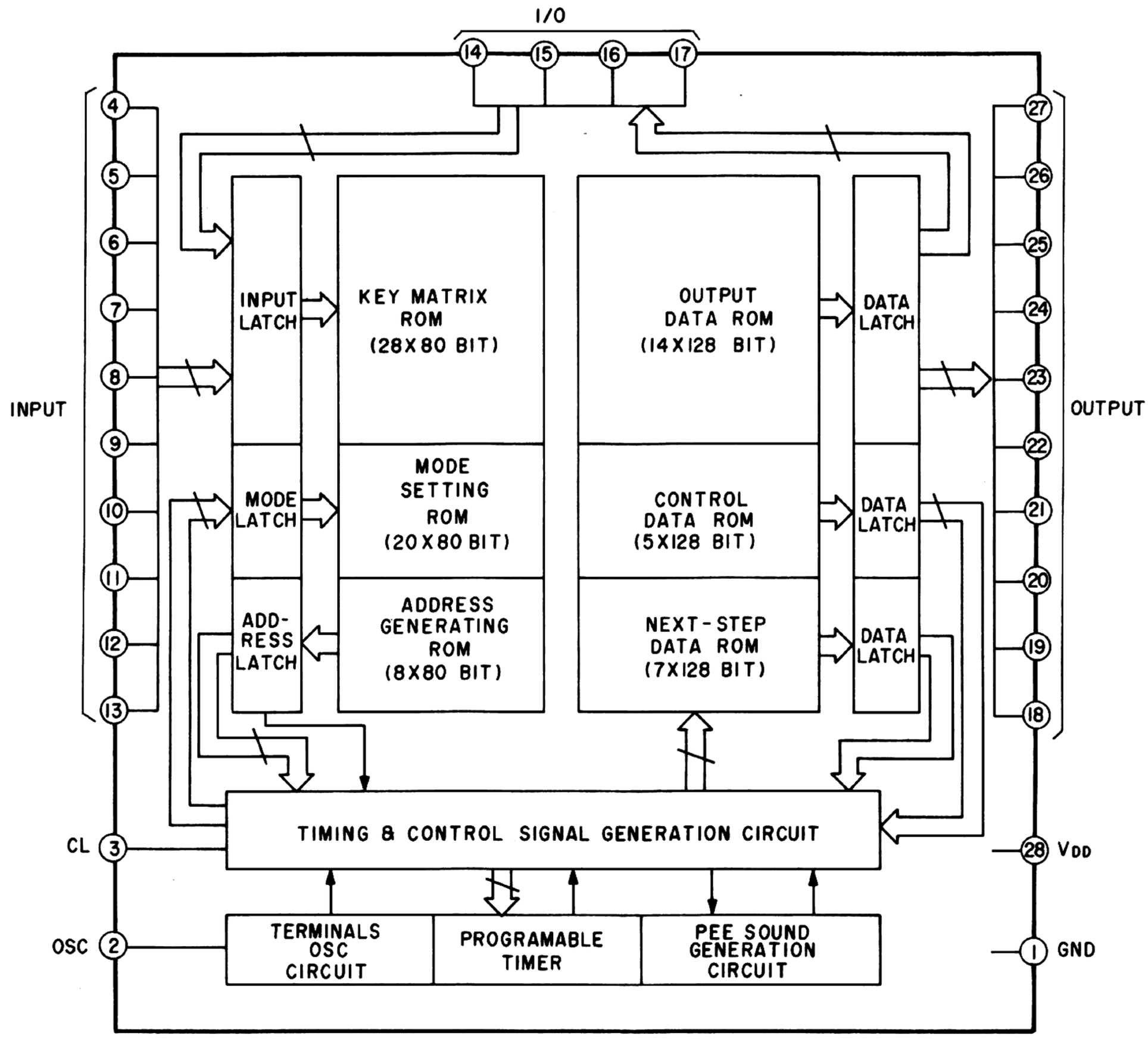

LH6402H

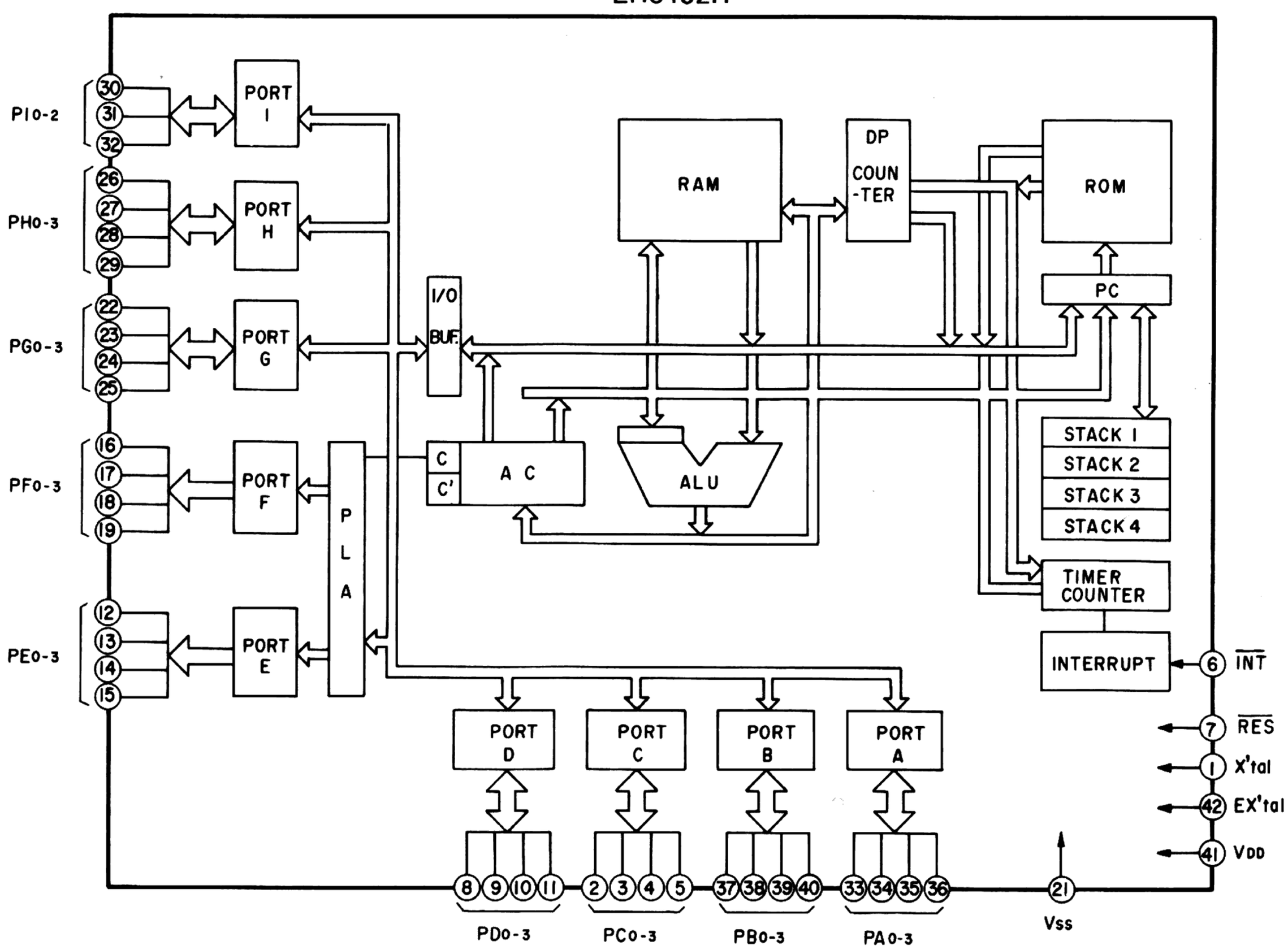

TC5067BP

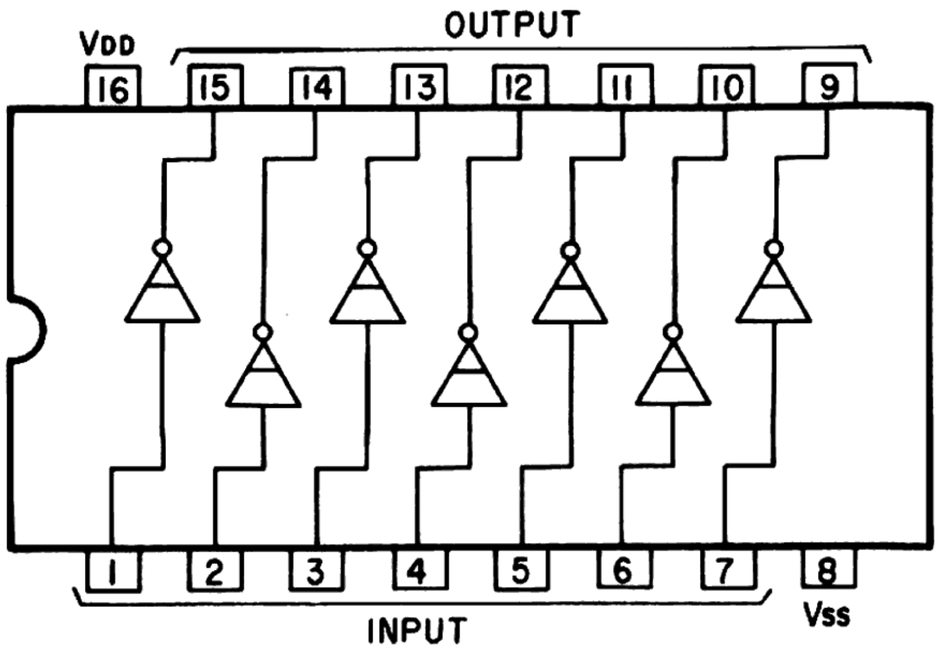

TD62305P

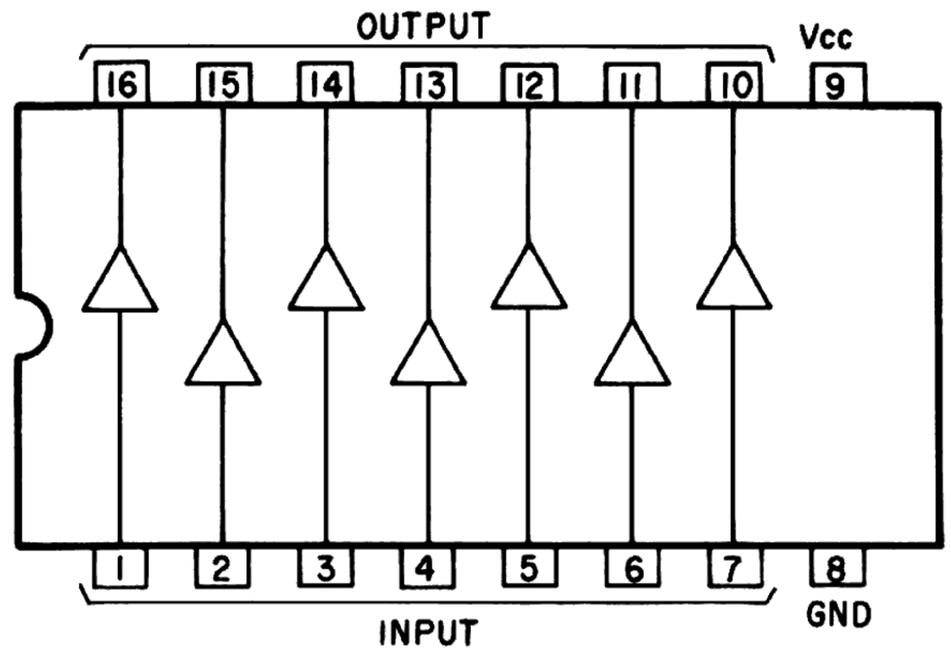

LC7800

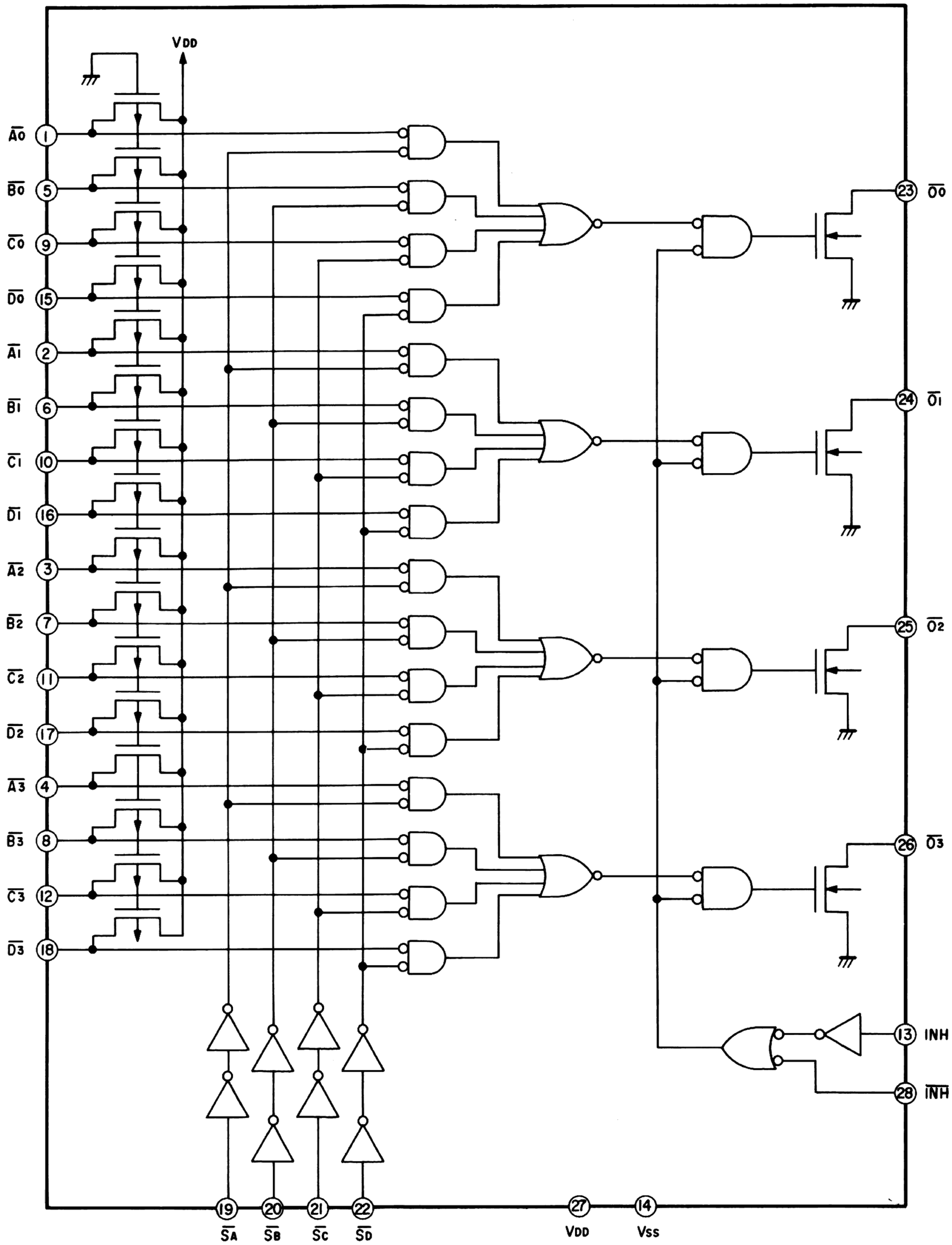

www.hifiengine.com

TEAC®

ティアック株式会社

	本社営業部	180	東京都武蔵野市中町3－7－3		電話 (0422)53-1111(代)
製品についてのお問合わせ サービスに関するお問合わせ	札幌営業所	064	札幌市中央区南7条西2－2	くぼたビル	電話 (011)521-4101(代)
	仙台営業所	980	仙台市1番町2－5－5	中央ビル	電話 (0222)27-1501(代)
	東京営業所	100	東京都千代田区永田町2－10－7	星ガ岡会館	電話 (03) 592-1831(代)
	三鷹出張所	180	東京都武蔵野市中町3－7－3		電話 (0422)55-1610(代)
	千葉出張所	280	千葉市松波1－11－3	石橋松波ビル	電話 (0472)55-1281(代)
	横浜営業所	221	横浜市神奈川区沢渡1－1	高島台第一ビル	電話 (045)312-3270(代)
	名古屋営業所	464	名古屋市千種区東山通り3－2－3		電話 (052)782-4581(代)
	静岡出張所	420	静岡市中島大割2861－1		電話 (0542)81-6561(代)
	大阪営業所	564	大阪府吹田市垂水町3－34－10		電話 (06) 384-5201(代)
	京都出張所	600	京都市下京区大宮通四条下ル四条大宮町21番地	三虎ビル	電話 (075)842-0751(代)
	岡山出張所	700	岡山市青江512番1号		電話 (0862)25-8601(代)
	広島営業所	733	広島市中区中島町10－24		電話 (082)243-3581(代)
	福岡営業所	812	福岡市博多区博多駅東2－17－5	モリメンビル	電話 (092)431-5781(代)
サービスに関するお問合わせ	本社サービス1課	180	東京都武蔵野市中町3－7－3		電話 (0422)53-3242(代)
	松本サービスセンター	399-07	塩尻市広丘吉田1007－7		電話 (0263)58-6849(代)
	新潟サービスセンター	950	新潟市東明7－4－1		電話 (0252)86-7640(代)
	大宮サービスセンター	330	大宮市三橋2－846		電話 (0486)42-4551(代)
	沖縄サービスセンター	901-22	沖縄県宜野湾市字喜友名229		電話 (09889)2-2020(代)
技術的なお問合わせ	テープデッキ相談室	180	東京都武蔵野市中町3－7－3		電話 (0422)53-9213(代)

TEAC CORPORATION	3-7-3 NAKA-CHO MUSASHINO TOKYO PHONE (0422) 53-1111
TEAC CORPORATION OF AMERICA	7733 TELEGRAPH ROAD MONTEBELLO CALIFORNIA 90640 PHONE (213) 726-0303
TEAC CANADA LTD.	3610 NASHUA DRIVE UNIT 1 & 2 MISSISSAUGA ONTARIO L4V 1L2 PHONE 416-673-3303
TEAC AUSTRALIA PTY., LTD.	115 WHITEMAN STREET SOUTH MELBOURNE VICTORIA 3205 PHONE 699-6000

PRINTED IN JAPAN 1084SK1.91·D-4715A

www.hifiengine.com