TEAC®

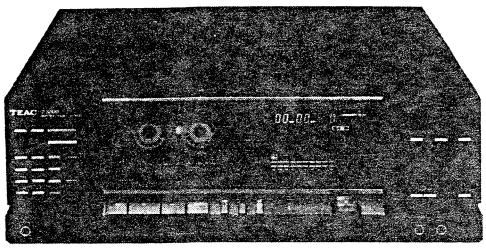

SERVICE MANUAL

Z-5000

Master Cassette Deck

Effective: May, 1983. B30067

1 SPECIFICATIONS AND SERVICE DATA

仕様およびサービス・データ

Notes:
1. Improvements may result in changes in specifications and service data.
2. 0 dB is referenced to 0.775 V in this manual.

注：
1. 仕様およびサービス・データは改善のため予告なく変更することがあります.
2. 本マニュアルの0dBは0.775Vを基準としています.

SPECIFICATIONS

Track system 4-track, 2-channel stereo
Heads 3: Erase, record and playback
Type of tape Cassette tape, C-46, C-60 and C-90 (Philips type)
Tape speed 4.76 cm/s (1-7/8 ips)
Input (level and impedance)
MIC: Specified input level: −57 dB (1.09 mV)/10 kohms
Minimum input level: −67 dB (346 μV)
LINE IN: Specified input level: −9 dB (275 mV)/50 kohms
Minimum input level: −19 dB (86.9 mV)
Output (level and impedance)
OUTPUT: Specified output level: −5 dB (436 mV)/50 khoms
PHONES: Specified output level: −15.7 dB (127 mV)/8 ohms
Equalization
METAL: 3180 μs + 70 μs
CrO_2: 3180 μs + 70 μs
NORMAL: 3180 μs + 120 μs
Head configuration
1/2-track, 1-channel erase head
1/4-track, 2-channel record and playback head
Motors 1 DC FG DD servo motor (for capstan drive)
1 DC motor (for reel drive)
1 DC motor (for ancillary control)
Bias frequency 100 kHz ±0.5 kHz
Operation position Horizontal
Power requirements
100/120/220/240 V AC, 50/60 Hz, 35 W (General export)
120 V AC, 60 Hz, 35 W (U.S.A./Canada)
220 V AC, 50 Hz, 35 W (Europe)
240 V AC, 50 Hz, 35 W (U.K./Australia)
Weight 10 kg (22 lbs.) net
Dimensions See Fig. 2-2

SERVICE DATA

MECHANICAL

Tape speed deviation 3,000 Hz ±45 Hz
Tape speed drift 45 Hz
Wow and flutter
Playback: 0.05% (WRMS)
Record/playback: 0.20% (RMS)
Pinch roller pressure 350 g to 450 g (12.3 oz to 15.9 oz.)
Reel Torque
Take-up: 35 to 65 g-cm (0.48 to 0.09 oz-inch)
Supply: 2 to 6 g-cm (0.028 to 0.084 oz-inch)
F.F. or REW: 120 to 160 g-cm (1.6 to 2.3 oz-inch)
Fast winding time
100 seconds for MTT-501 (C-60)

ELECTRICAL

Frequency response
See Figs. 6-5 to 6-9
Signal-to-noise ratio
Playback: NORMAL: 48 dB min.
Overall: METAL, CrO_2: 48 dB min.
NORMAL: 45 dB min.
Erase efficiency 65 dB min. at 1 kHz (measured with input 10 dB higher than the specified input level)
Channel separation 35 dB min. at 1 kHz
Adjacent track crosstalk 40 dB min. at 125 Hz
Total harmonic distortion 1.8% or less with METAL and CrO_2 tapes
2.0% or less with NORMAL tape

- Dolby Noise Reduction System manufactured under license from Dolby Laboratories Licensing Corporation.
"Dolby" and the double-D symbol are trademarks of Dolby Laboratories Licensing Corporation.
- dbx Noise Reduction system made under license from dbx Incorporated. The name "dbx" and the dbx symbol are trademarks of dbx Incorporated.

＊ドルビー・ノイズ・リダクション・システムは，ドルビー研究所からの実施権に基づき製造されています.
＊ドルビー及び□□，ドルビー研究所の登録商標です.
＊dbxおよびdbxマークは，dbxインコーポレーテッドの登録商標です.
＊dbxシステムは，dbxインコーポレーテッドの実施権に基づいて製造されています.

CAUTION

⚠ Parts marked with this sign are safety critical components. They must always be replaced with identical components — refer to the appropriate parts list and ensure exact replacement.

注　意

⚠印は安全重要部品です．交換する時は必ずティアック指定の部品を使用してください.

2 CASE AND FRONT PANEL REMOVAL

外装部品の外し方

Disassemble in number-order
(番号順に外して下さい)

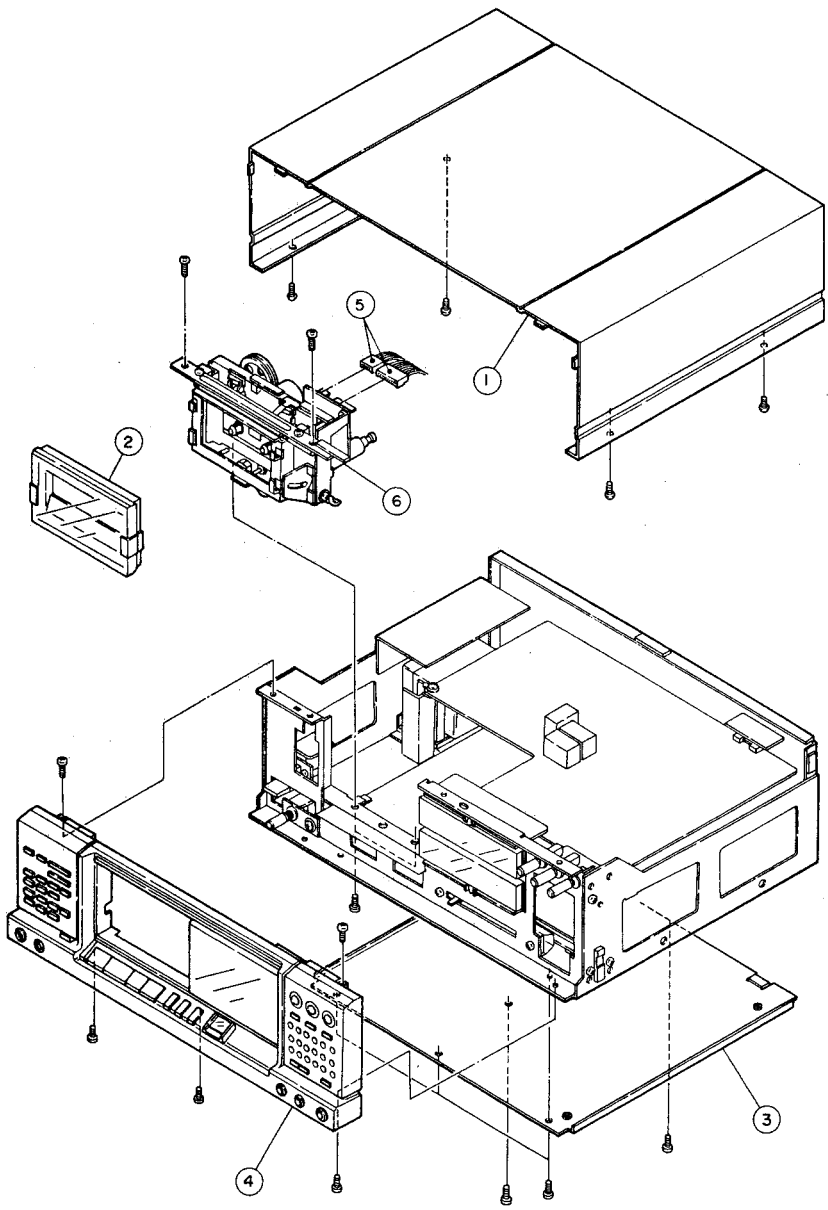

Fig. 2-1

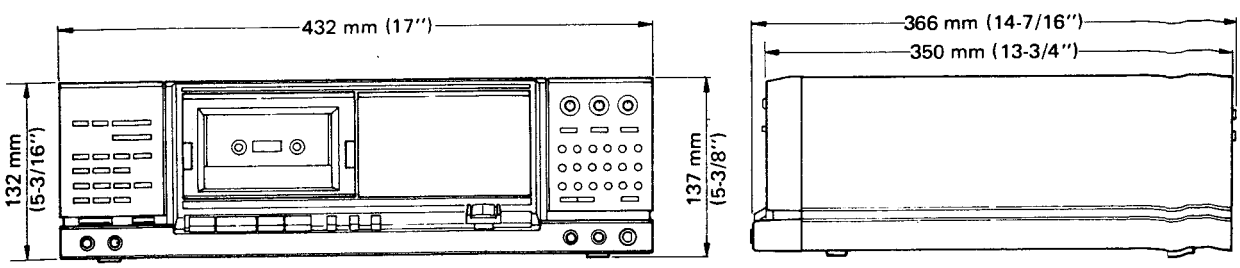

Fig. 2-2

3 PARTS LOCATION

部品配置図

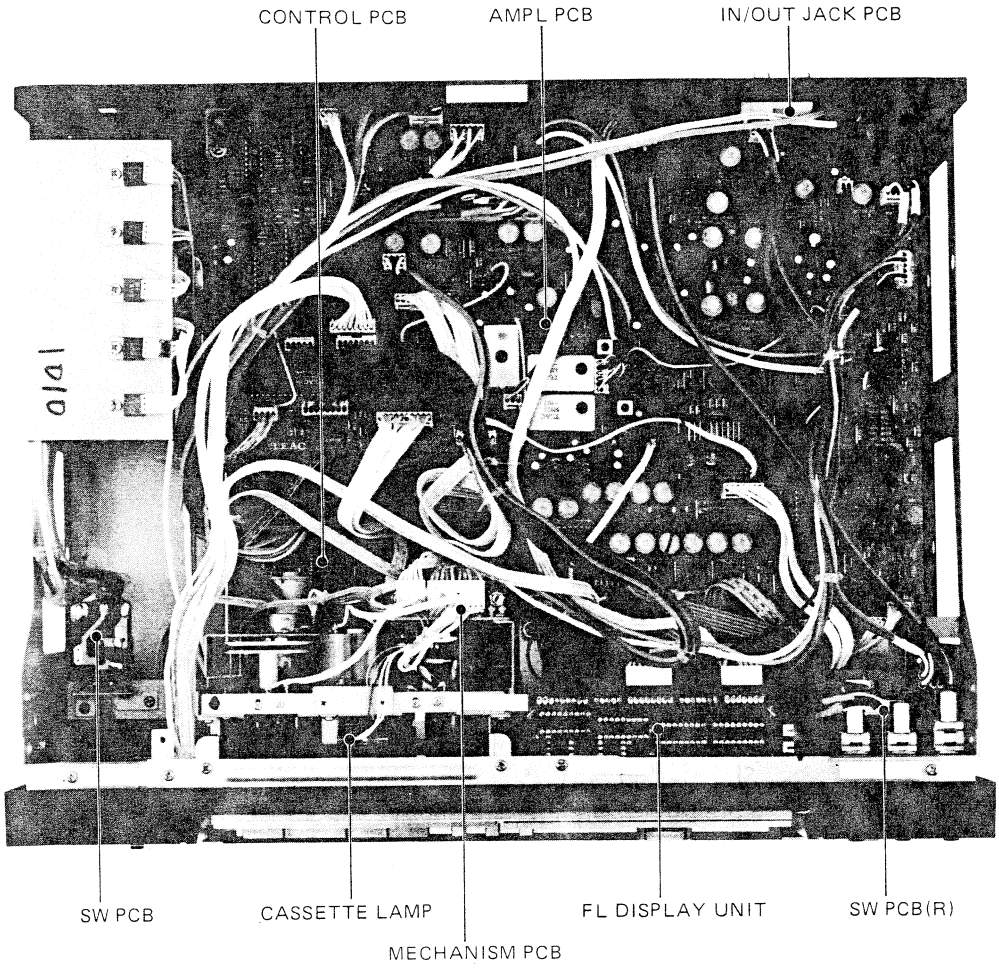

Fig. 3-1 Top view
（上面）

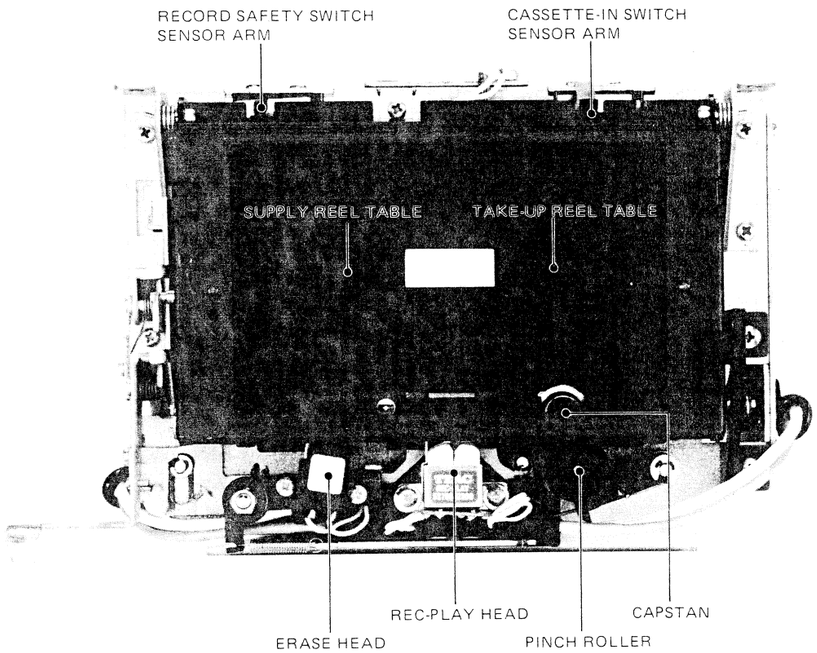

Fig. 3-2 Transport view
（トランスポート）

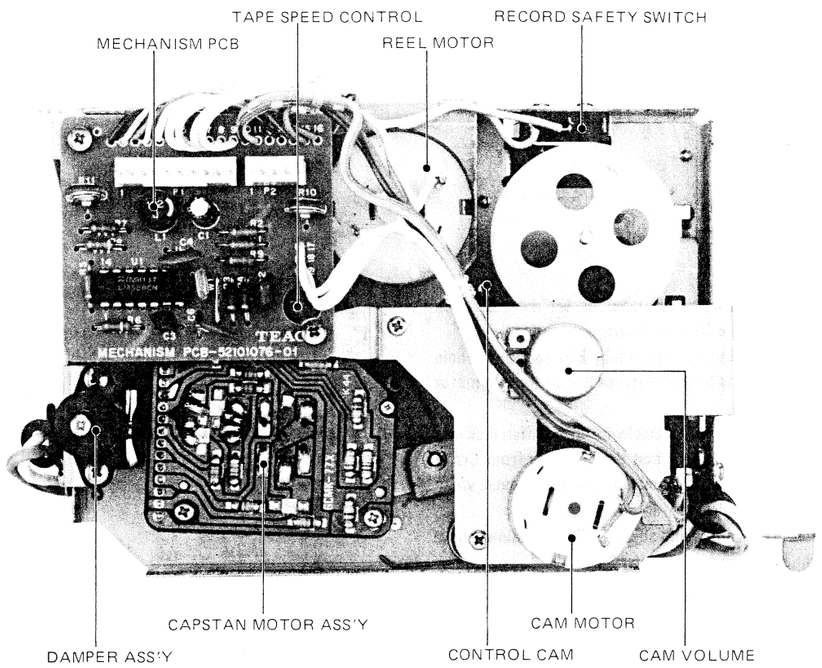

Fig. 3-3 Transport rear view
（トランスポート裏面）

4 VOLTAGE ADJUSTMENT AND CHECKS
電源電圧の調整と確認

4-1 VOLTAGE SELECTION (FOR GENERAL EXPORT MODELS)

1. Always disconnect the power line cord before making these adjustments.
2. Locate the voltage selector on the rear as shown in the illustration.
3. Using a regular screwdriver, turn the selector until the numerals corresponding to the voltage requirements of your area appear.

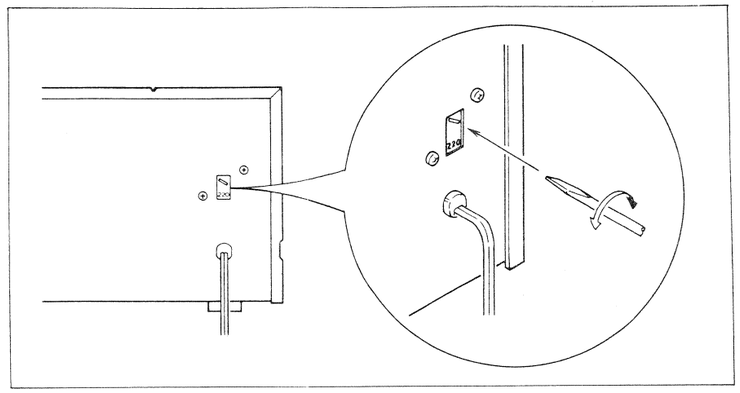

Fig. 4-1

4-2 DC VOLTAGE ADJUSTMENT

1. Adjust R55 on the control PCB for +12 V DC at the Q531 collector and adjust R56 for +25 V DC at the Q534 collector.

2．DC電圧の調整

●コントロールPCBのQ531のコレクタ電圧が＋12 Vとなるよう R55をQ534のコレクタ電圧が＋25Vとなるよう R56を各々，調整する．

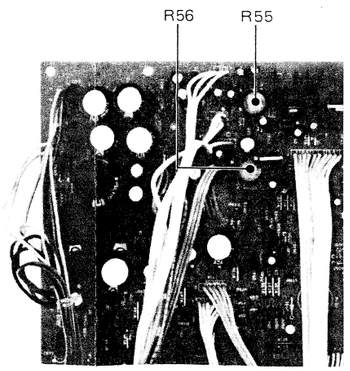

Fig. 4-2

5 MECHANICAL ADJUSTMENTS AND CHECKS

機構部の調整と確認

5-1 PINCH ROLLER PRESSURE

1. With the cassette holder shut and no tape loaded, put the deck in play mode after pushing the cassette-in switch sensor arm upwards and holding it.
2. Hook a spring scale on the pinch roller assembly, as shown in the illustration.
3. Pull the scale down until there is sufficient force to separate the pinch roller from the capstan shaft.
4. Ease pressure until the pinch roller makes just enough contact with the capstan shaft so that the pinch roller just begins to turn. At this point, note the reading on the scale. It should be from 350 g to 450 g (12.3 oz. to 15.9 oz.)

1．ピンチ・ローラ圧着力チェック

戻し法による測定値：350～450g

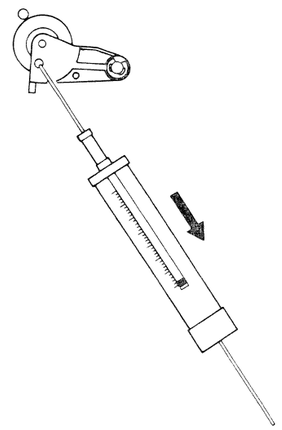

Fig. 5-1

5-2 CASSETTE HOLDER

1. Adjust the position of holder guide plate so that it is parallel with the cassette holder as shown in Fig. 5-2 when a cassette tape is loaded.

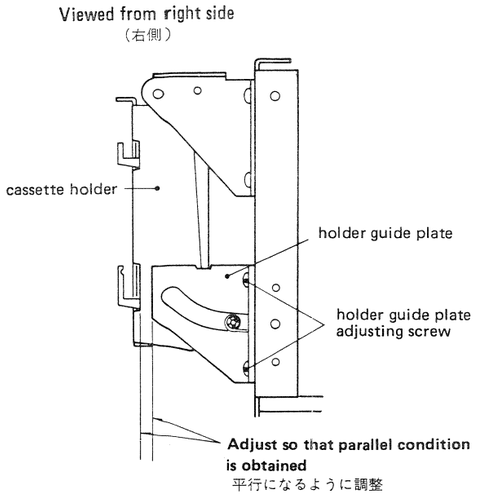

Fig. 5-2

2．カセット・ホルダ位置調整

テープ(MTT-501等)がセットされた状態で，カセット・ホルダとホルダ・ガイド板とが平行になるように，ホルダ・ガイド板取付位置を調整する．

5-3 DAMPER ADJUSTMENT

1. Load a C-60 tape and close the cassette holder.
2. Turn the air adjusting screw so that after pushing the EJECT button, the cassette holder opens completely, taking 0.5 to 1.0 seconds.

Note: Be careful not to turn the screw beyond the permissible adjustment limit shown in Fig. 5-3.

3．ダンパ調整

調整個所　ダンパのエア調整ネジ

調整値　テープ(MTT-5061等)がセットされた状態で，カセット・ホルダが開く時間　0.5秒～1.5秒

注意　図に示す許容調整範囲を越えてネジを回さないこと．

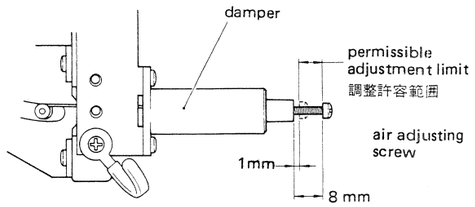

Fig. 5-3

5-4 MICRO SWITCHES

5-4-1 Cassette-in Switch and Record Safety Switch

1. Load any standard cassette and close the cassette holder.
2. Adjust mounting position of the two micro switches, (cassette-in switch and record safety switch) so that the actuator position is in the setting range shown in Fig. 5-4.

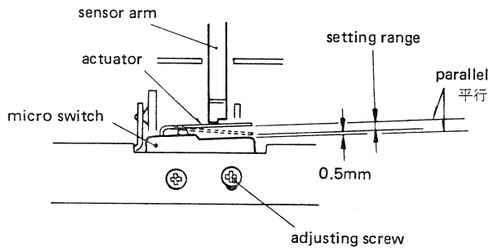

Fig. 5-4

5-4-2 Power Eject Switch

1. Adjust mounting position of the power eject switch so that the power eject switch is turned on and off with a stroke of 0.5 mm to 1.0 mm.

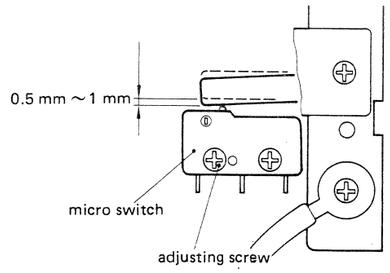

Fig. 5-5

5-5 CONTROL CAM

1. Load an empty cassette (without tape) or set the cassette-in switch to the on position with your finger.
2. Push the PAUSE (❚❚) button, then adjust R11 so that the hole of marker PA coincides with the reference line of the reel motor mounting plate.
3. Rotate the control cam by hand clockwise to counterclockwise repeatedly, then readjust R11 so that the distances from CW to hole and CCW to hole on the PA marker are nearly equal when the reel motor starts to vibrate.
4. Place the deck in STOP mode and adjust R10 as explained above for R11, this time refering to the center ST hole.

4．マイクロ・スイッチ位置調整

カセット・イン・スイッチ及び録音防止スイッチ

テスト・テープMTT-501を装着し，カセット・イン・スイッチ(S1)，録音防止スイッチ(S3)共，オン時のアクチエータ位置が図のセッティング範囲になるようにスイッチ位置を調整する．

パワー・イジェクト・スイッチ

パワー・イジェクト・スイッチ(S3)が0.5～1.0mmのストロークで，オン・オフするようスイッチ取付位置を調整する．

5．コントロール・カムの位置調整

- テープのない空カセットを装着する．(カセット・イン・スイッチを手でオンしても可)
- PAUSE状態にし，コントロール・カムのPA範囲の中心穴が，リール・モータ取付板の基準線に一致するようR11を調整する．次に手でカムを正転・逆転させ，モータの振動が始まる点がいずれもカムのPA範囲の中心穴から等間隔になるようR11を微調整する．
- 同様にSTOP状態にし，カムのST範囲の中心穴から等間隔になるようR10を調整する．

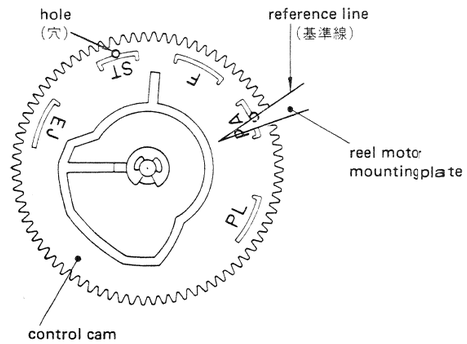

Fig. 5-6 Control cam positioning
（コントロール・カムの位置調整）

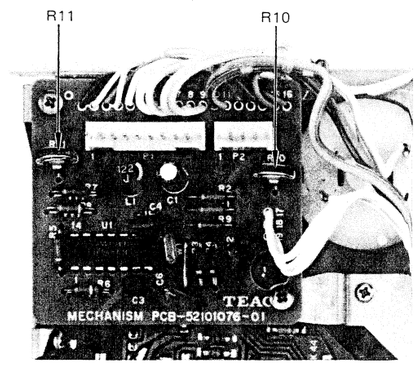

Fig. 5-7

5-6 TAPE SPEED

1. Connect a frequency counter to the deck as shown in Fig. 5-8.
2. Play a tape for around five minutes to warm up the deck, then load a TEAC MTT-111 test tape containing a 3000-Hz test tone and play the test tape from the beginning.
3. While the tape is playing, use a non-metalic screwdriver, and adjust the tape speed control (semi-fixed variable resistor) on the capstan servo PCB (see Fig. 5-9) for a reading of 3000 to 3010 Hz on the frequency counter.

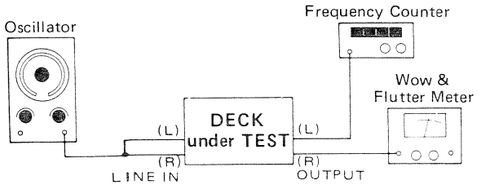

Fig. 5-8

5-7 WOW AND FLUTTER

Note: These measurements should be made at the beginning, middle, and the end of the tape.

5-7-1 PLAYBACK

1. Connect a wow-and-flutter meter to the deck as shown in Fig. 5-8.
2. Load and play a TEAC MTT-111 test tape.
3. Check that the reading on the wow-and-flutter meter is within 0.05% (WRMS).

5-7-2 RECORD/PLAYBACK

4. Load a TEAC MTT-502 test tape (blank) and record a 3000 Hz signal.
5. Rewind the tape to the beginning of the recorded section, and play it.
6. The wow and flutter should not be more than 0.20% (RMS).

6．テープ速度調整

MTT-111テープを再生し，テープ速度が3000Hz$^{+10}_{0}$ Hzの範囲内であることを確認する．

調整個所　キャプスタン・サーボ基板内の半固定ボリウム．非金属製ドライバを使用．ボリウムを破損しないよう特に注意のこと．

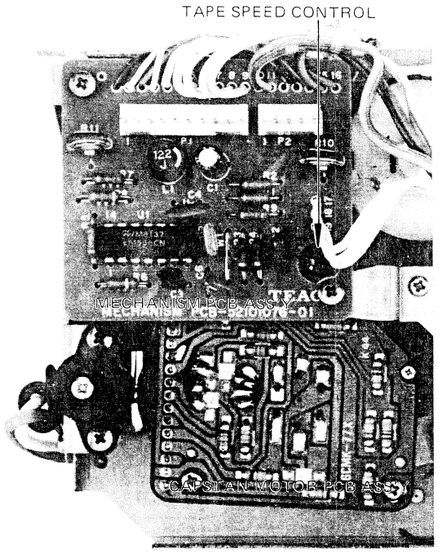

Fig. 5-9

7．ワウ・フラッタ・チェック

再　生　法	WRMS	0.05%以下	MTT-111使用
録　再　法	RMS	0.20 %以下	MTT-502使用

測定周波数：3000Hz

5-8 TAPE PATH ADJUSTMENT

1. Insert the head check jigs A and B into the cassette holder and press the PLAY button.
2. Making sure that the head check jig B touches the surface of the REC·PLAY head, adjust head position with the screw so that the slanted edge of the head check jig B comes to rest approximately in the middle between the two line markers on the head check jig A.
3. Set the head check jig B as shown in Fig. 5-11 so that the head check jig B can just pass through smoothly between the tape guides.
4. If head height is too low, add the head spacer. If it is too high, remove the head spacer.
5. Play a mirror tape (MTT-902T) and check for any noticeable tape curling on the sides of the record playback head guide. Adjust the height of the erase head so that it touches the upper guide when curling is evident.
6. The clearance between the head base plate and the head stopper should be 0.3 mm ~ 0.5 mm, as shown in Fig. 5-13, when the erase head is touching the pad holder assembly during playback.

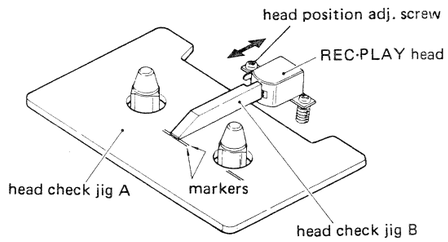

Fig. 5-10

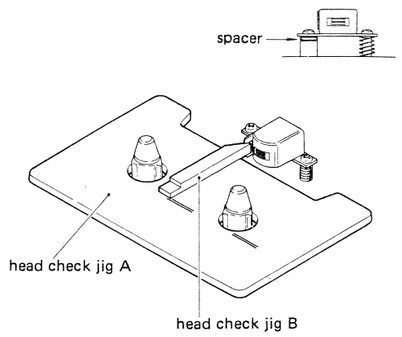

Fig. 5-11

8．テープ走行調整

- ヘッド治具(A)を装着し，PLAY状態でヘッド治具(B)を録再ヘッドの先端に当てた時，ヘッド治具(B)がヘッド治具(A)のマーカ基準範囲内のほぼ中央になるよう録再ヘッドの位置を調整する．
- ヘッド治具(B)を図のようにセットした時，録再ヘッドのテープ・ガイドをスムーズに通り抜けることを確認する．若し，ヘッドの高さが低い時はヘッド・スペーサを追加し，低い場合はヘッド・スペーサを外す．
- ミラー・テープを走行させ，録・再ヘッドのガイドでテープがカールしないことを確認する．
  カールする場合は消去ヘッドの上側ガイドに接するよう消去ヘッドの高さを調整する．
- 再生時，消去ヘッド取付板とヘッド・ストッパとのスキ間は0.3～0.5mmであること．

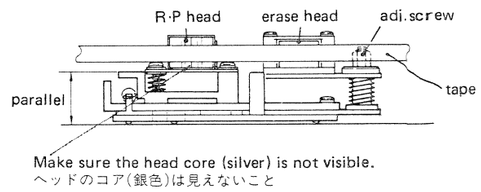

Fig. 5-12

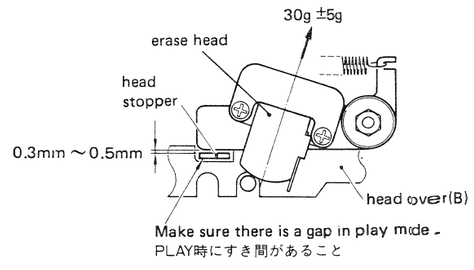

Fig. 5-13

6 ELECTRICAL ADJUSTMENTS AND CHECKS

アンプ部の調整と確認

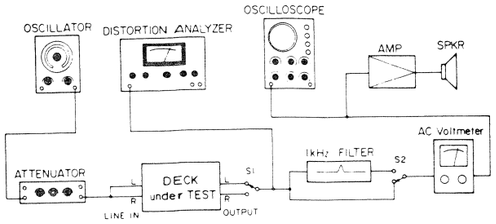

Fig. 6-1 Basic test setup

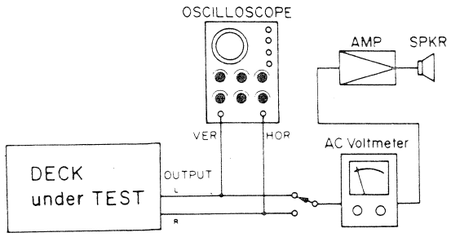

Fig. 6-2 Test setup for azimuth check

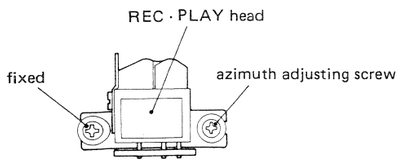

Fig. 6-3 Azimuth screw location

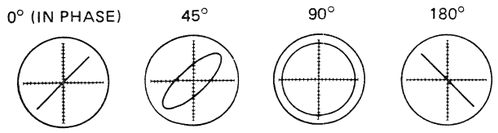

Fig. 6-4 Confirming phase relationship

TAPE SELECTOR: METAL
tape: MTT-356

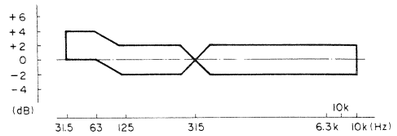

Fig. 6-5 Playback frequency response

TAPE SELECTOR: METAL, CrO2
tape: MTT-5072, MTT-5061

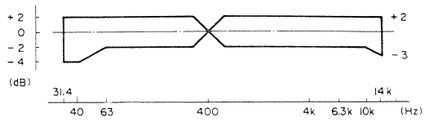

Fig. 6-6 Overall frequency response

TAPE SELECTOR: METAL, CrO2
tape: MTT-5072, MTT-5061

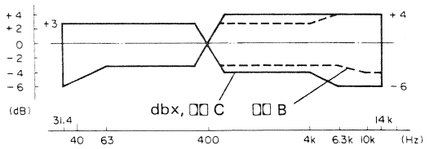

Fig. 6-7 Overall frequency response(NR IN)

TAPE SELECTOR: NORMAL
tape: MTT-501

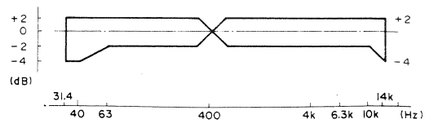

Fig. 6-8 Overall frequency response

TAPE SELECTOR: NORMAL
tape: MTT-501

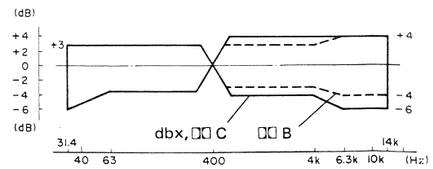

Fig. 6-9 Overall frequency response (NR IN)

PRECAUTIONS

1. Before performing adjustments and checks, clean and demagnetize the entire tape path.
2. Make sure the deck is properly set for the voltage in your locality.
3. In general, adjustments and checks are made in the order of L-ch then R-ch. Double REF. Nos. and test point designations indicate L-ch/R-ch. (Example: R11/R21)
4. 0 dB is referenced to 0.775 V. If an AC voltmeter that references 0 dB to 1 V is used, appropriate compensation should be made.
5. The AC voltmeter used in the procedures must have an input impedance of 1MΩ or more.
6. Note the "deck settings" at the top of each chart. The settings apply to all checks for a specific chart unless explicitly stated otherwise.

Deck settings:
MONITOR sw: TAPE
NR SYSTEM sw: OUT
TAPE sw: METAL
OUTPUT cont.: MAX

TEAC test tapes:
MTT-150 For Dolby level calibration
MTT-356: For playback frequency response check for METAL, CrO2
MTT-501: For S/N check with NORMAL

6-1 PLAYBACK PERFORMANCE

ITEM	SETTING	INPUT SIGNAL	ADJUST (or CHECK)	MEASUREING POINT: RESULT	REMARKS
1. REC·PLAY head azimuth	Connection: Fig. 6-2	MTT-150	Check	OUTPUT: Phase: within 45°	Refer to Fig. 6-4.
		MTT-356 (12.5 kHz)	Azimuth screw of R·P head (Fig. 6-3)	OUTPUT: Max. output at L-& R-ch's (on VTVM)	
2. Specified output level	———	MTT-150	R11/R21 (NR OUT) R12/R22 (NR □□ B)	TP. 5 (L/R) 580 mV (−2.5 dB)	TP.2 (L/R) −6 dB ±1 dB (346 mV~436 mV)
			OUTPUT cont.	OUTPUT: L-ch −5 dB (436 mV)	Spec. output level
			R220 (R-ch only)	OUTPUT: R-ch −5 dB (436 mV)	
3. PEAK PROGRAM LEVEL METER	———	MTT-150	R16/R26	PEAK PROGRAM LEVEL METER: 0 dB	
4. Frequency response	TAPE SELECTOR: METAL	MTT-356 (315 Hz and 10 kHz portions)	R10/R20	OUTPUT: Nearly equal level at both frequencies.	Fig. 6-5
	TAPE SELECTOR: NORMAL	MTT-356	Check	OUTPUT: At 10 kHz should be approx. 4 dB higher than measured in above step.	
5. Signal-to-noise ratio	TAPE SELECTOR: METAL, NORMAL	Empty Cassette (without tape)	Check	OUTPUT: 52 dB min. [METAL] 48 dB min. [NORMAL]	Ratio of spec. output of −5 dB tone

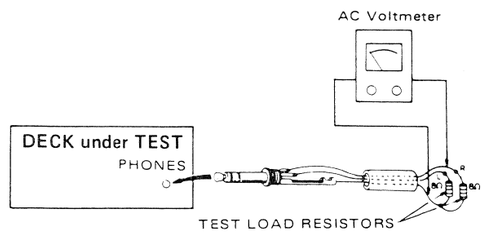

Fig. 6-10 Test setup for PHONES check

6-2 MONITOR PERFORMANCE

Deck settings:
MONITOR sw: SOURCE
NR SYSTEM sw: OUT
OUTPUT cont.: Specified position (item 2)
INPUT sw: LINE

ITEM	SETTING	INPUT SIGNAL	ADJUST (or CHECK)	MEASURING POINT: RESULT	REMARKS
6. Minimum LINE input level	REC PRESET LEVEL cont.: MAX RECORD cont.: MAX	LINE IN: 400 Hz/–19 dB (86.9 mV)	R13/R23 (NR OUT) R14/R24 (NR □□ B)	TP.6 (L/R) 387.5 mV (–6 dB)	TP. 4(L/R) –6 dB ±1 dB (346 mV~436 mV)
7. Minimum MIC input level	INPUT sw: MIC	MIC: 400 Hz/–67 dB (347 μV)	Check	TP. 5 (L/R) 580 mV ±2 dB (461 mV~731 mV)	
8. Specified LINE input level	———	LINE IN: 400 Hz/–9 dB (275 mV)	MASTER cont.	TP. 5 (L/R) +2.5 dB (1.03 V)	
			PRESET (L) cont.	TP. 5 (L) 580 mV(–2.5 dB)	
			PRESET (R) cont.	TP. 5 (R) 580 mV(–2.5 dB)	
	IMPORTANT: Do not change the setting of the **MASTER and REC PRESET LEVEL** controls after establishing the setting as above.				
9. PEAK PROGRAM LEVEL METER		LINE IN: 400 Hz/–9 dB (275 mV)	Check	PEAK PROGRAM LEVEL METER: 0 dB ±1 dB	
10. PHONES output level	Connection: Fig. 6-10	LINE IN: 400 Hz/–9 dB (275 mV)	Check	PHONES: –15.7 dB ±2 dB (100 mV~160 mV)	

6-3 RECORDING PERFORMANCE

Deck settings:
MONITOR sw: TAPE
MASTER and PRESET cont.: Specified position(item 8)
NR SYSTEM sw: OUT
OUTPUT cont.: Specified position(item 2)
INPUT sw: LINE
CALIBRATION sw: REFERENCE

TEAC test tapes:
MTT-5072: For METAL record test
MTT-5061: For CrO_2 record test
MTT-501: For NORMAL record test

ITEM	SETTING	INPUT SIGNAL	ADJUST (or CHECK)	MEASURING POINT: RESULT	REMARKS
11. OSC frequency	REC/PLAY mode	LINE IN: No signal	U506	TP. B 100 kHz ±0.5 kHz	If frequency is less than 97.5 kHz, readjust U506 afterremoving C534.
12. BIAS trap	———	LINE IN: No signal	L103/L203 (SOURCE)	TP. 7 (L/R)	Min.reading
			U117/U217 (TAPE)	OUTPUT	
13. Record bias	1) Adjust in the order of steps (2)(3)(4).			OUTPUT: Nearly equal level at both frequencies.	
	2) TAPE SELECTOR: METAL	400 Hz, 6.3 kHz, (METAL only) 10 kHz/ –39 dB(8.69 mV)	R32/R42	400 Hz, 10 kHz	
			R10/R20*	400 Hz, 6.3 kHz	*EQPCB
			R32/R42	400Hz, 10 kHz	Fineadjustment
	3) TAPE SELECTOR: CrO_2		R31/R41	400 Hz, 10 kHz	
	4) TAPE SELECTOR: NORMAL		R30/R40	400 Hz, 10 kHz	

ITEM	SETTING	INPUT SIGNAL	ADJUST (or CHECK)	MEASURING POINT: RESULT	REMARKS
14. Reocrd level	TAPE SELECTOR: METAL Tape: MTT-5072	LINE IN: 400 Hz/–9 dB (275 mV)	R19/R29	OUTPUT: –5 dB (436 mV)	
	TAPE SELECTOR: CrO_2 Tape: MTT-5061		R18/R28		
	TAPE SELECTOR: Tape: MTT-501		R17/R27		
15. Total harmonic distortion	Same as 14 above.	LINE IN: 400 Hz/–12 dB (195 mV)	Check	OUTPUT: 1.8% or less with METAL, CrO_2 2.0% or less with NORMAL	
16. Frequency response	TAPE SELECTOR: METAL Tape: MTT-5072	LINE IN: Required signal/ –39 dB (8.69 mV)	Check	OUTPUT: Figs. 6-6 and 6-7	
	TAPE SELECTOR: CrO_2 Tape: MTT-5061		Check	OUTPUT: Figs. 6-6 and 6-7	
	TAPE SELECTOR: NORMAL Tape: MTT-501		Check	OUTPUT: Figs. 6-8 and 6-9	
	If frequency response is out of specification, recheck #13, "Record bias".				
17. Signal-to-noise ratio	TAPE SELECTOR: METAL Tape: MTT-5072	LINE IN: 400 Hz/–9 dB (275 mV) ↓ No signal	Check	OUTPUT: 48 dB min.	Ratio of specified output of –5 dB to noise
	TAPE SELECTOR: CrO_2 Tape: MTT-5061		Check	OUTPUT: 48 dB min.	
	TAPE SELECTOR: NORMAL Tape: MTT-501		Check	OUTPUT: 45 dB min.	
18. Erase efficiency	• Connection is same as in Fig. 6-1, but engage 1-kHz filter. • Record a 1-kHz signal. Rewind tape to midpoint of recorded portion. • Record a "no signal" portion. Find the difference between the 1-kHz portion and the "no-signal" portion.				
	TAPE SELECTOR: METAL Tape: MTT-5072	LINE IN: 1 kHz/+1 dB (0.869 V) ↓ No signal	Check	OUTPUT: 65 dB min. ratio	
19. REC MUTE function	• Connection: Fig. 6-1, but engage 1-kHz filter. • Record a 1-kHz signal. Hold REC MUTE button depressed for several seconds. (At this time, make sure LED on the button lights). Rewind and play the tape. Find the difference between the 1-kHz portion and the "no-signal" portion.				
	TAPE SELECTOR: METAL Tape: MTT-5072	LINE IN: 1 kHz/+1 dB (0.869 V) ↓ No signal	Check	OUTPUT: 65 dB min. ratio	
20. Channel separation	• Connection Fig. 6-1, but do not connect LINE IN (R), and engage 1-kHz filter. • Set the deck to record mode. Find the difference between the 1-kHz recorded portion (L-ch) and the "no signal" portion (R-ch).				
	TAPE SELECTOR: METAL Tape: MTT-5072	LINE IN: L-ch 1 kHz/–9 dB (275 mV) R-ch No signal	Check	OUTPUT: 35 dB min. ratio	
21. Adjacent track crosstalk	• Connection: Fig. 6-1, but do not connect LINE IN (L) and OUTPUT (L). • Record a 125-Hz signal on R-ch and note output level. Invert tape and play R-ch track. Check leakage level against the output reference of previously recorded portion.				
	TAPE SELECTOR: METAL Tape: MTT-5072	LINE IN: L-ch No signal R-ch 125 Hz/–9 dB (275 mV)	Check	OUTPUT: 40 dB min. ratio	

ITEM	SETTING	INPUT SIGNAL	ADJUST (or CHECK)	MEASUREING POINT: RESULT	REMARKS
22. DOLBY NR effect □□B	• Record a 1-kHz signal with NR SYSTEM switch OUT. Play this portion with NR SYSTEM switch set to OUT, and then set to □□B. Obtain the difference in output levels between OUT and □□B positions. Repeat the above process using a 10-kHz signal.				
	TAPE SELECTOR: METAL Tape: MTT-5072	LINE IN: 1 kHz/−29 dB (27.5 mV)	Check	OUTPUT: Variation 3 dB~8 dB	
		LINE IN: 10 kHz/−39 dB (8.69 mV)	Check	OUTPUT: Variation 8 dB ~ 12 dB	
23. DOLBY NR effect □□C	• Record a 1-kHz signal with NR SYSTEM switch OUT. Play this portion with NR SYSTEM switch set to OUT, and then set to □□C. Obtain the difference in output levels between OUT and □□C positions. Repeat the above process using a 10-kHz signal.				
	TAPE SELECTOR: METAL Tape: MTT-5072	LINE IN: 1 kHz/−39 dB (8.69 mV)	Check	OUTPUT: Variation 16 dB ~ 20 dB	
		LINE IN: 10 kHz/−49 dB (2.75 mV)	Check	OUTPUT: Variation 16 dB ~ 20 dB	

6-4 DBX PERFORMANCE

Note: Test this performance only after you are sure that the "6-6 DBX CIRCUIT ADJUSTMENT" is correct.

Deck settings:
MONITOR sw: TAPE
MASTER and PRESET cont.: Specified position (item 8)
NR SYSTEM sw: dbx
OUTPUT cont.: Specified position (item 2)
INPUT sw: LINE
CALIBRATION sw: REFERENCE

TEAC test tapes:
MTT-5072: For METAL record test
MTT-5061: For CrO_2 record test
MTT-501: For NORMAL record test

ITEM	SETTING	INPUT SIGNAL	ADJUST (or CHECK)	MEASURING POINT: RESULT	REMARKS
24. Encoding level	REC/PAUSE mode	LINE IN: 400 Hz/−14.5 dB (146 mV)	Check	TP. 11/TP. 21 on control PCB: −8.2 dB (300 mV)	
	• If, in the above step, the RESULT is out of specification, correct using the MASTER and REC PRESET LEVEL controls so that the correct value is obtained when the controls is in the specified position (item 8).				
	REC/PAUSE mode	LINE IN: 400 Hz/−14.5 dB*1 (146 mV)	R12/R22	TP. 13/TP. 23 on control PCB: −8.2 dB*2 (300 mV)	*1 Reference 1 *2 Reference 2
25. Encoding single frequency response	REC/PAUSE mode	LINE IN: 100 Hz/−14.5 dB (146 mV)	Check	TP. 13/TP. 23 on control PCB: +0.5 dB ±1 dB against Ref. 2 (283 mV~357 mV)	
		LINE IN: 10 kHz/−14.5 dB (146 mV)	Check	TP.13/TP. 23 on control PCB: −2.8 dB ±1 dB against Ref. 2 (194 mV~244 mV)	
26. Encoding operation level	REC/PAUSE mode	LINE IN: 400 Hz/−74.5 dB*3 (146 μV)	Check	TP. 13/TP. 23 on control PCB: −30 dB ±0.5 dB against Ref. 2 (8.96 mV~10.1 mV)	*3 −60 dB against Ref. 1
		LINE IN: 400 Hz/+5.5 dB*4 (1.46 V)	Check	TP. 13/TP. 23 on control PCB : +10 dB ±0.5 dB against Ref. 2 (0.896 V~1.01 V)	*4 +20 dB against Ref. 1

ITEM	SETTING		INPUT SIGNAL	ADJUST (or CHECK)	MEASUREING POINT: RESULT	REMARKS
27. Decoding level	• Record a 400 Hz signal with NR SYSTEM switch OUT. Rewind and play the recorded portion. Note the off-the-tape level from OUTPUT ..... (1). Repeat the above process with NR SYSTEM switch set to dbx . Note the off-the-tape level ..... (2). Compare the difference between (1) and (2). If ±1 dB or more, correct by R15/R25 using (1) as Reference.					
	REC/PLAY mode TAPE SW: METAL Tape: MTT-5072	NR SYSTEM: OUT:	LINE IN: 400 Hz/−14.5 dB (146 mV)	Check	OUTPUT: Note the off-the-tape level *5	*5 Reference 3
		NR SYSTEM: dbx	LINE IN: 400 Hz/−14.5 dB	R15/R25	OUTPUT: ±1 dB against Ref. 3	
28. Distortion	REC/PLAY mode measure the off-the-tape level { TAPE SELECTOR: METAL Tape: MTT-5072 { TAPE SELECTOR: CrO2 Tape: MTT-5061 { TAPE SELECTOR: NORMAL Tape: MTT-501		LINE IN: 400 Hz/−12 dB (195 mV)	Check	OUTPUT: 1.0% or less	
29. Signal-to-noise ratio	Same as above		LINE IN: 400 Hz/−9 dB (275 mV) ↓ No signal	Check	OUTPUT: 65 dB min. ratio	Ratio of 400 Hz output (−5 dB) to noise

6-5 MANUAL CALIBRATION

ITEM	SETTING	INPUT SIGNAL	ADJUST (or CHECK)	MEASURING POINT: RESULT	REMARKS
30. METER calibration	STOP mode MONITOR: SOURCE	LINE IN: 400 Hz/−31 dB (21.8 mV)	Shortcircuit between TP.8 (L/R) and GND.		
			R15/R25*	0 dB lighting	*AMIL PCB
31. Internal OSC. adj.	TAPE SELECTOR: METAL CALIBRATION: MANUAL REC/PAUSE mode Press the TEST TONE Button repeatedly.	LEVEL LED	R51 ↕ repeat R52	TP. D min. T.H.D.	Approx. 315 Hz
		LEVEL LED	R50	TP. 6 −28 dB ±0.2 dB (30.1 mV~31.6 mV)	Approx. 315 Hz
		EQ LED	R53	TP. D 14 kHz ±0.5 kHz	
32. LEVEL trimmers variation ranges	Same as above	LEVEL LED	LEVEL trimmers R13/R23 R14/R24 R15/R25	OUTPUT: CW ↔ CCW Approx. 8 dB	Each ape
33. EQ trimmers variation ranges	Same as above	EQ LED	EQ trimmers R16/R26 R17/R27 R18/R28	OUTPUT: CW ↔ CCW Approx. 6 dB	Each ape

6-6 DBX CIRCUIT ADJUSTMENT

Notes:

1. This adjustment is not usually needed unless a trimmer(s) has been changed or a component(s) on the CONTROL PCB has sustained damage, since the PCB has been precisely adjusted in the factory.
2. Disconnect the J503 and J505 connectors on the AMPL. PCB. Turn the deck OFF to prevent accidental damage when disconnecting or reconnecting.

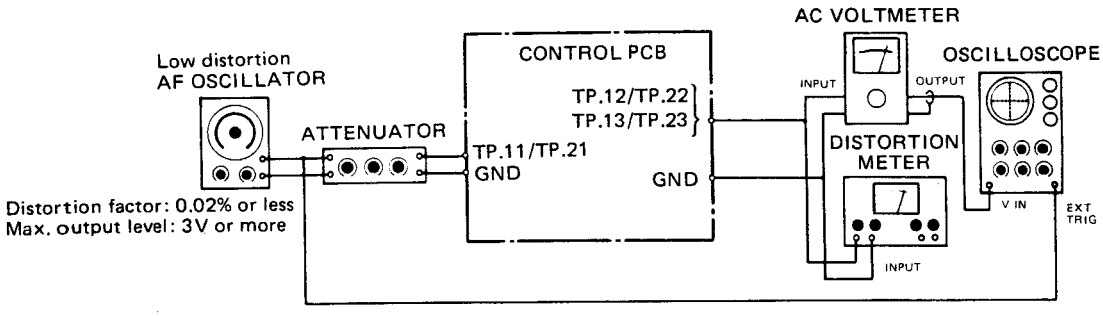

Fig. 6-11

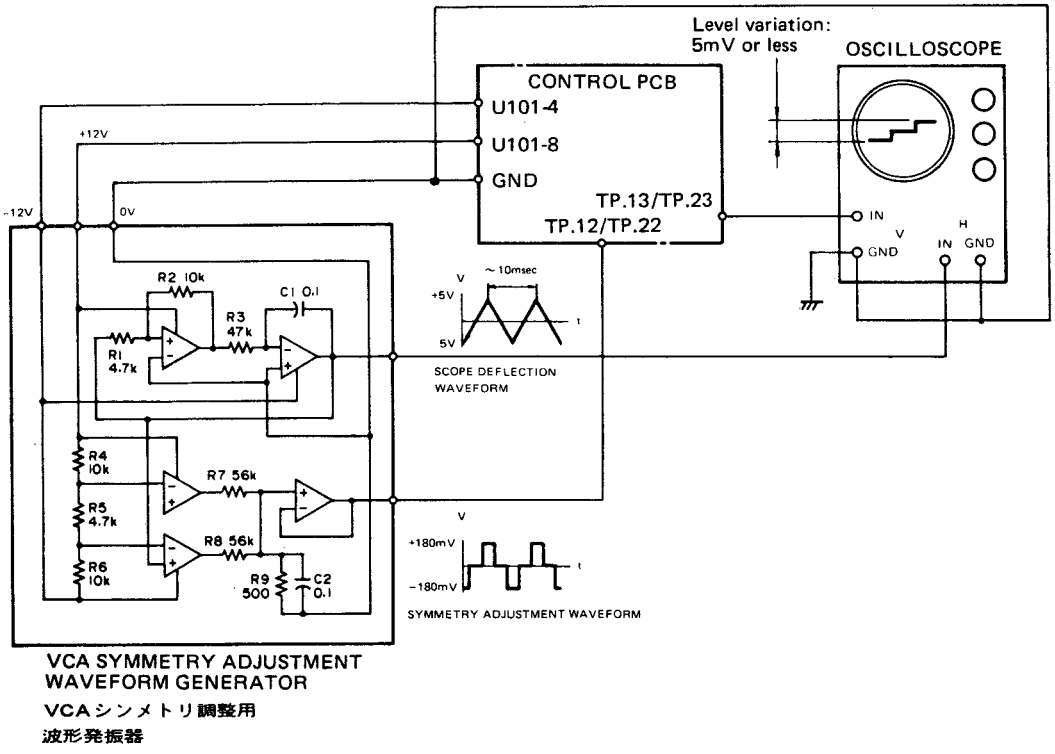

Fig. 6-12

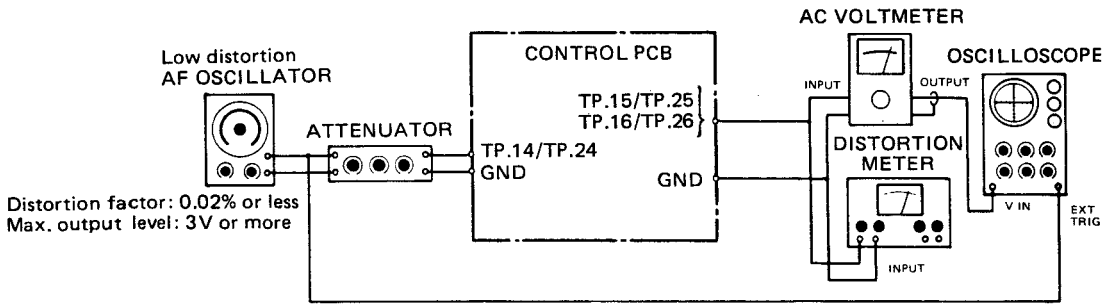

Fig. 6-13

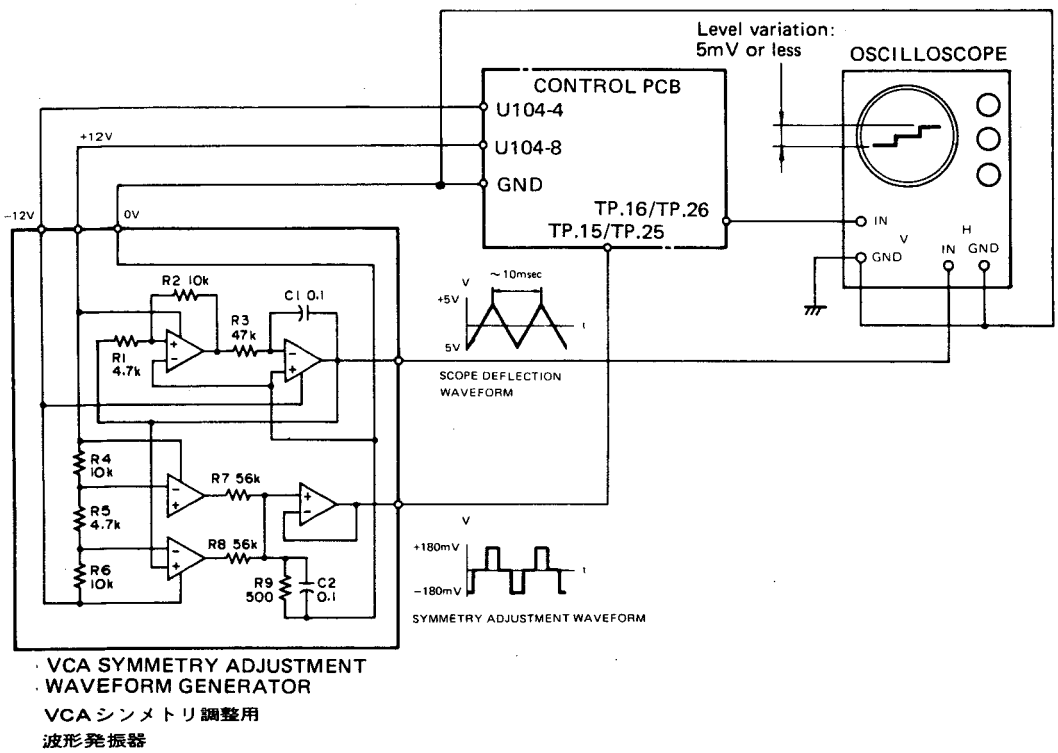

Fig. 6-14

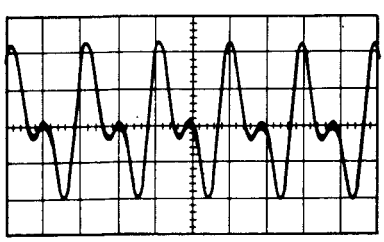

Fig. 6-15 RMS SYM check (Incorrect)
(RMS SYM 不良)

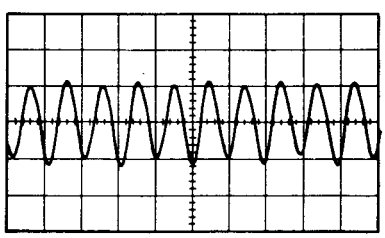

Fig. 6-16 RMS SYM check (Correct)
(RMS SYM 良)

6-6-1 ENCODING ADJUSTMENT

ITEM	SETTING	INPUT SIGNAL	ADJUST (or CHECK)	RESULT	REMARKS
1. RMS SYM	Fig. 6-11	TP. 11/TP. 21 100 Hz/–8.2 dB (300 mV)	R11/R21	TP. 12/TP. 22 Clean 200 Hz sinewave.	Refer to Figs. 6-15 and 6-16.
2. Encoding level	Fig. 6-11	TP.11/TP. 21 400 Hz/–8.2 dB*1 (300 mV)	R12/R22	TP. 13/TP. 23 –8.2 dB*2 (300 mV)	*1 Reference 1 *2 Reference 2
3. VCA SYM	Fig. 6-12	TP. 12/TP. 22	R10/R20	TP. 13/TP. 23 A relatively straight horizontal line on the 'scope face'. (Level variation: 5 mV or less)	
4. Encoding single frequency response	Fig. 6-11	TP. 11/TP. 21 100 Hz/–8.2 dB (300 mV)	Check	TP. 13/TP. 23 +0.2 dB ±0.5 dB against Ref. 2 (290 mV~325 mV)	
		TP. 11/TP. 21 10 kHz/–8.2 dB	Check	TP.13/TP. 23 –3.3 dB ±0.5 dB against Ref. 2 (194 mV~217 mV)	
5. Encoding operation level	Fig. 6-11	TP. 11/TP. 21 400 Hz/–68.2 dB*3 (300 μV)	Check	TP. 13/TP. 23 –30 dB ±0.5 dB against Ref. 2 (8.96 mV~10.1 mV)	*3 –60 dB against Ref. 1
		TP. 11/TP. 21 400 Hz/+11.8 dB*4 (3 V)	Check	TP. 13/TP. 23 +10 dB ±0.5 dB against Ref. 2 (0.896 V ~ 1.01 V) Distortion: 0.3% or less	*4 +20 dB against Ref. 1

6-6-2 DECODING ADJUSTMENT

ITEM	SETTING	INPUT SIGNAL	ADJUST (or CHECK)	RESULT	REMARKS
1. RMS SYM	Fig. 6-13	TP. 14/TP. 24 100 Hz/–8.2 dB (300 mV)	R14/R24	TP. 15/TP. 25 Clean 200 Hz sinewave.	Refer to Figs. 6-15 and 6-16.
2. Decoding level	Fig. 6-13	TP.14/TP. 24 400 Hz/–8.2 dB*1 (300 mV)	R15/R25	TP. 16/TP. 26 –8.2 dB*2 (300 mV)	*1 Reference 1 *2 Reference 2
3. VCA SYM	Fig. 6-14	TP. 15/TP. 25	R13/R23	A relatively straight horizontal line on the 'scope face'. (Level variation: 5 mV or less) TP.16/TP.26	
4. Decoding single frequency response	Fig. 6-13	TP.14/TP. 24 100 Hz/–8.2 dB (300 mV)	Check	TP. 16/TP. 26 –0.2 dB ±1 dB against Ref. 2 (261 mV~329 mV)	
		TP. 14/TP. 24 10 kHz/–8.2 dB	Check	TP. 16/TP. 26 +5.5 dB ±1 dB against Ref. 2 (504 mV~634 mV)	
5. Decoding operation level	Fig. 6-13	TP. 14/TP. 24 400 Hz/–38.2 dB*3 (9.49 mV)	Check	TP. 16/TP. 26 –60 dB ±1 dB against Ref. 2 (267 μV~337 μV)	*3 –30 dB against Ref.1
		TP. 14/TP. 24 400 Hz/+1.8 dB*4 (0.949 V)	Check	TP. 16/TP. 26 against Ref. 2 +20 dB ±1 dB (2.67 V~3.37 V)	*4 +10 dB against Ref. 1

注1．アンプ部の調整のまえに，消去ヘッド，録・再ヘッド，テープ走行部分それぞれを充分消磁し，クリーナ液で清掃する．
2．調整は左チャネル，右チャネルの順に行なう．
3．0dB＝0.775V
4．OUTPUT端子の負荷は50kΩ
5．ドルビーNR回路およびDBX回路の測定に使用するレベル計の入力インピーダンスは1MΩ以上．
6．特に指示のない限り各スイッチおよびつまみの位置は右表のように設定する．

MONITOR	TAPE
NR SYSTEM	OUT
INPUT	LINE
TAPE SELECTOR	METAL
CALIBRATION	REFERENCE

再生系

調整項目	準備・設定	入力信号	調整個所	測定個所・調整値	備考
1．ヘッド・アジマス調整	設定表参照 OUTPUT つまみ MAX	MTT-150	チェック	位相 45° 以内	Fig.6-4参照
		MTT-356 (12.5kHz区分)	ヘッドのアジマス調整ねじ	L,R共 最大出力	
2．再生レベル・セット	同 上	MTT-150	R11/R21(NR OUT) R12/R22(NR DB)	TP.5(L/R) 580mV(−2.5dB)	TP.2(L/R) −6dB±1dB
			OUTPUTつまみ R220(Rchのみ)	OUTPUT Lch −5dB OUTPUT Rch −5dB	規定再生状態
3．メータ・レベル・セット	規定再生状態	MTT-150	R16/R26	FL ピーク・プログラム・レベルメータ指示 0dB	
4．再生周波数特性チェック	TAPE SELECTOR METAL	MTT-356	R10/R20	315Hzと10kHzが等しくなるよう調整	
	TAPE SELECTOR NORMAL	MTT-356	チェック	スイッチをMETAL→NORMALに切換えると10kHzの出力は4dB高くなること．	
5．再生S/Nチェック	TAPE SELECTOR METAL, NORMAL	空カセット(テープなし)	チェック	S/N METAL 52dB NORMAL 48dB	基準レベルは−5dB

モニタ系

調整項目	準備・設定	入力信号	調整個所	測定個所・調整値	備考
6．LINE最小入力レベル	REC PRESET LEVEL つまみ RECORD つまみ } MAX	400Hz/−19dB	R13/R23(NR OUT) R14/R24(NR DB)	TP.6(L/R) 387.5mV(−6dB)	TP.4(L/R) −6dB±1dB
7．MIC最小入力レベル	同 上	MIC 400Hz/−67dB	チェック	TP.5(L/R) 580mV(−2.5dB) ±2dB	
8．LINE入力レベル	同 上	400Hz/−9dB	MASTER つまみ	TP.5(L/R) +2.5dB	
			PRESET LEFT つまみ	TP.5L 580mV(−2.5dB)	規定入力状態
			PRESET RIGHT つまみ	TP.5R 580mV(−2.5dB)	
9．メータ・レベル・チェック	LINE規定入力状態	400Hz/−9dB	チェック	FLピーク・プログラム・レベル・メータ指示 0dB±1dB	
10．PHONES 出力レベル・チェック	同 上	400Hz/−9dB	チェック	PHONES −15.7dB±2dB	8Ω 負荷

録音系

第11, 12項を除き信号入力個所：LINE IN, 測定個所：OUTPUT

調整項目	準備・設定	入力信号	調整個所	測定個所・調整値	備考
11. 発振器周波数	REC/PLAY状態	無信号	U506	TP.B 100kHz±0.5kHz	97.5 kHz以下の時，C534を外しU506を調整
12. バイアス・トラップ	同上	同上	L103/L203(SOURCE) U117/U217(TAPE)	TP.7(L/R) OUTPUT	バイアス漏れ最小
13. バイアス・セット	TAPE SELECTOR / テープ METAL / MTT-5071 CrO_2 / MTT-5061 NORMAL / MTT-501	400Hz 6.3kHz(METALのみ) 10kHz /−39dB	400Hzと10kHzの録再出力が等しくなるよう下記の順序で調整 METAL: R32/R42 METAL: R10/R20 METAL: R32/R42 CrO_2: R31/R41 NORMAL: R30/R40	400Hzと6.3kHz	EQ PCB 微調
14. 録音レベル・セット	METAL / MTT-5072 CrO_2 / MTT-5061 NORMAL / MTT-501	400Hz/−9dB	R19/R29 R18/R28 R17/R27	録再出力 −5dB	規定録音状態
15. 総合周波数特性	METAL / MTT-5072 CrO_2 / MTT-5061 NORMAL / MTT-501	−39dB	チェック	規格 METAL Fig6-6参照 CrO_2 Fig6-6参照 NORMAL Fig6-8参照	11ページに記載
16. 総合歪率チェック	同上	400Hz/−12dB	チェック	METAL 1.8%以下 CrO_2 2.0%以下 NORMAL 2.0%以下	
17. 総合S/Nチェック	同上	400Hz/−9dB	チェック	METAL 48dB以上 CrO_2 48dB以上 NORMAL 45dB以上	基準レベルは−5dB
18. 消去率チェック	METAL / MTT-5072	1kHz/+1dB	チェック	録音部分を再生した時のレベルを基準レベルとし，録音部分を消去した時の出力レベルとの差65dB以上	1kHz B.P.F.使用
19. チャネル間セパレーション・チェック	同上	Lch 1kHz/−9dB Rch 無信号	チェック LchとRchの信号を入れかえた場合についてもチェックすること	Lch再生レベルを基準とし，Rchのの出力レベルの差 35dB以上	1kHz B.P.F.使用
20. トラック間クロストーク・チェック	同上	Lch 無信号 Rch 125Hz/−9dB	チェック	録音されたトラックを再生したときの出力レベルを基準レベルとし，テープを反転して再生したときのRch出力レベルとの差 40dB以上	
21. REC MUTE効果チェック	同上	1kHz/+1dB	チェック	1kHzを録音し，途中でREC MUTE釦を押して無信号録音部分を作る.(このとき REC MUTE LEDが点灯することを確認する.)このテープを再生したときの，信号部分と無信号部分との出力レベル差 65dB以上（1kHz B.P.F.使用）	
22. ドルビーNR効果チェック (B-TYPE)	同上	1kHz/−29dB	チェック	NR SYSTEMスイッチをOUT位置にして信号を録音する．次にこれを再生し，スイッチをOUT↔□□Bと切換えた時の出力レベル変化． 3dB〜8dB	
		10kHz/−39dB	チェック	測定法：上と同じ 8dB〜12dB	
23. ドルビーNR効果チェック (C-TYPE)	同上	1kHz/−39dB	チェック	NR SYSTEMスイッチをOUT位置にして信号を録音する．次にこれを再生し，スイッチをOUT↔□□Cと切換えた時の出力レベル変化． 16dB〜20dB	
		10kHz/−49dB	チェック	測定法：上と同じ 16dB〜20dB	

DBX系

注．DBXのレベル調整はDBX回路調整を完了してから行なうこと．

調整項目	準備・設定	入力信号	調整個所	測定個所・調整値	備考
24. エンコーダ・レベル・セット	モード REC/PAUSE	LINE IN 400Hz/−14.5dB	チェック	TP.11/TP.21 −8.2dB	
			R12/R22	TP.13/TP.23 −8.2dB	
25. エンコーダ単一周波数応答チェック	同上	LINE IN 400Hz/−14.5dB	チェック	TP.13/TP.23(レベル変化) +0.5dB±1dB	400Hzの出力(−8.2dB)を基準レベルとする．
		LINE IN 10kHz/−14.5dB	チェック	TP.13/TP.23(レベル変化) −2.8dB±1dB	
26. エンコーダ・動作レベル・チェック	同上	LINE IN 400Hz/−74.5dB	チェック	TP.13/TP.23(レベル変化) −30dB±0.5dB	400Hzの出力(−8.2dB)を基準レベルとする．
		LINE IN 400Hz/+5.5dB	チェック	TP.13/TP.23(レベル変化) +10dB±0.5dB	
27. デコーダ・レベル・セット	TAPE SW METAL テープ MTT-5072 / NR SYSTEMスイッチ OUTで録再	LINE IN 400Hz/−14.5dB		OUTPUT 録音出力を基準レベルとする．	
	NR SYSTEMスイッチdbxで録再		R15/R25	基準レベルとの差 ±1dB以内	
28. 録再歪率	TAPE SW METAL CrO_2 NORMAL / テープ MTT-5072 MTT-5061 MTT-501	LINE IN 400Hz/−12dB	チェック	OUTPUT 全テープ 1.0%以下	
29. 録再S/N	同上	無信号録音後再生する	チェック	OUTPUT 全テープ 65dB以上	基準レベルは −5dB

マニュアル・キャリブレーション

調整項目	準備・設定	入力信号	調整個所	測定個所・調整値	備考
30. メータ調整	STOP SOURCE	LINE 400Hz/−31dB	R15/R25*	TP.8(L/R)を接地 0dB点灯	*AMPL PCB
31. 内部発振器調整	TAPE SELECTOR: METAL CALIBRATION: MANUAL REC/PAUSE→ TEST TONEを繰返し押す	LEVEL LED	R51 R52 繰返し	TP.D 歪最小	約315Hz
		LEVEL LED	R50	TP.6 −28dB±0.2dB	約315Hz
		EQ LED	R53	TP.D 14kHz±0.5kHz	
32. LEVEL可変範囲	同上	LEVEL LED	LEVELトリマー R13/R23 R14/R24 R15/R25	トリマーの全回転範囲 約8dB	各テープ共
33. EQ可変範囲	同上	EQ LED	EQトリマー R16/R26 R17/R27 R18/R28	トリマーの全回転範囲 約6dB	各テープ共

エンコーダ調整

注1．DBX回路は通常，調整の必要性はありません．万一，調整する場合は次の要項で行います．
注2．電源を切って，AMPL PCBのJ503とJ505のコネクタを外す．

調整項目	準備・設定	入力信号	調整個所	測定個所・調整値	備考
1．RMS SYMチェック	Fig.6-11	TP.11/TP.21 100Hz/300mV	R11/R21	TP.12/TP.22出力波形 200Hzの正弦波になるよう調整	Fig.6-15,6-16
2．エンコーダ・基準レベル調整	同　上	TP.11/TP.21 400Hz/300mV	R12/R22	TP.13/TP.23　300mV	
3．VCA SYM調整	Fig.6-12	TP.12/TP.22 階段波	R10/R20	TP.13/TP.23波形がほぼ一直線(5mV以下)	
4．周波数特性チェック	Fig.6-11	TP.11/TP.21 100Hz/300mV	チェック	TP.13/TP.23 290mV～325mV	
		TP.11/TP.21 10kHz/300mV	チェック	TP.13/TP.23 194mV～217mV	
5．エンコード効果チェック	同　上	TP.11/TP.21 400Hz/300μV	チェック	TP.13/TP.23 8.96mV～10.1mV	
		TP.11/TP.21 400Hz/3.0V	チェック	TP.13/TP.23 0.896V～1.01V 歪率　0.3%以下	

デコーダ調整

調整項目	準備・設定	入力信号	調整個所	測定個所・調整値	備考
7．RMS SYM調整	Fig.6-13	TP.14/TP.24 100Hz/300mV	R14/R24	TP.15/TP.25　200Hzの正弦波になるよう．	Fig.6-15,6-16
8．デコーダ基準レベル調整	同　上	TP.14/TP.24 400Hz/300mV	R15/R25	TP.16/TP.26 300mV	
9．VCA SYM調整	Fig.6-14	TP.15/TP.25 階段波	R13/R23	TP.16/TP.26 波形がほぼ一直線(5mV以下)	
10．周波数特性チェック	Fig.6-13	TP.14/TP.24 100Hz/300mV	チェック	TP.16/TP.26 261mV～329mV	
	同　上	同　上　10kHz/300mV	チェック	同　上　504mV～634mV	
11．デコード効果チェック	同　上	同　上　400Hz/9.49mV	チェック	同　上　267μV～337μV	
	同　上	同　上　400Hz/0.949V	チェック	同　上　2.67V～3.37V	

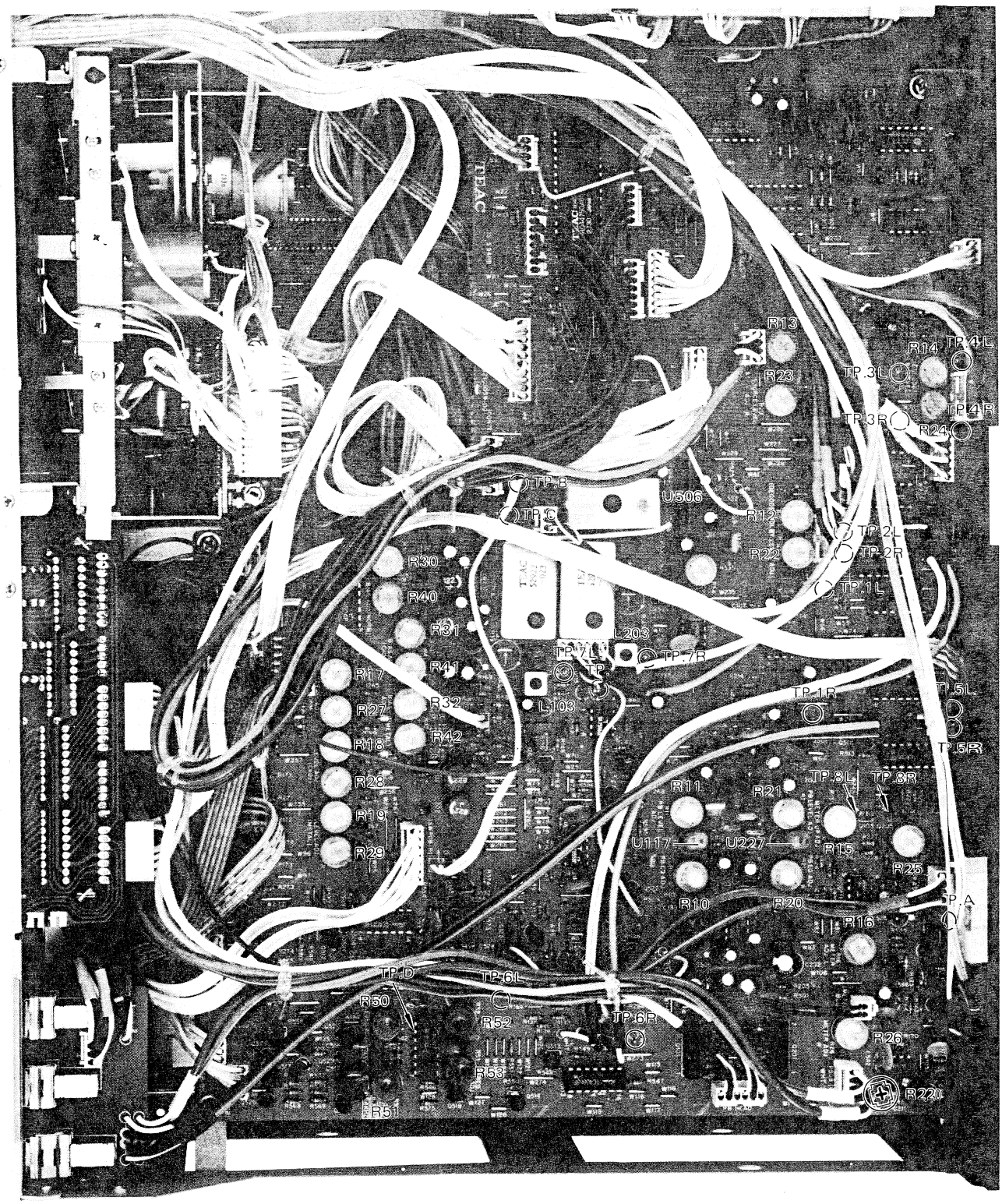
TEAC
R13
R14
TP-4L
R23
TP-3L
TP-4R
TP-3R
R24
TP-B
U506
TP-C
R12
TP-2L
R22
TP-2R
TP-1L
R30
R40
R31
L203
TP-7L
TP-7R
R41
R17
R32
L103
TP-1R
TP-5L
R27
R42
R18
TP-5R
R28
TP-8L
TP-8R
R11
R21
R19
U117
U227
R15
R29
R25
R10
R20
TP-A
R16
TP-D
TP-6L
R50
R52
TP-6R
R26
R53
R51
R220

Fig. 6-17

AMPL. PCB

R10/R20	Playback equalization	再生イコライザ
R11/R21	Output level (NR OUT)	出力レベル (NR OUT)
R12/R22	Output level (NR DD B)	出力レベル (NR DD B)
R13/R23	Input level (NR OUT)	入力レベル (NR OUT)
R14/R24	Input level (NR DD B)	入力レベル (NR DD B)
R15/R25	Meter (manual cal.)	メータ (マニュアル・キャリ)
R16/R26	Peak program level meter	ピーク・プログラム・レベル・メータ
R17/R27	Record level [NORMAL]	録音レベル [NORMAL]
R18/R28	Record level [CrO_2]	録音レベル [CrO_2]
R19/R29	Record level [METAL]	録音レベル [METAL]
R30/R40	Record bias [NORMAL]	録音バイアス [NORMAL]
R31/R41	Record bias [CrO_2]	録音バイアス [CrO_2]
R32/R42	Record bias [METAL]	録音バイアス [METAL]
R50	Internal OSC level	内部発振器レベル
R51	Internal OSC distortion	内部発振器歪率
R52	Internal OSC distortion	内部発振器歪率
R53	Internal OSC frequency	内部発振器周波数
R220	Output level (Rch only)	出力レベル (Rchのみ)
L103/L203	Bias trap (SOURCE)	バイアス・トラップ (SOURCE)
U117/U227	Bias trap (TAPE)	バイアス・トラップ (TAPE)
U506	Bias OSC frequency	バイアス発振器周波数

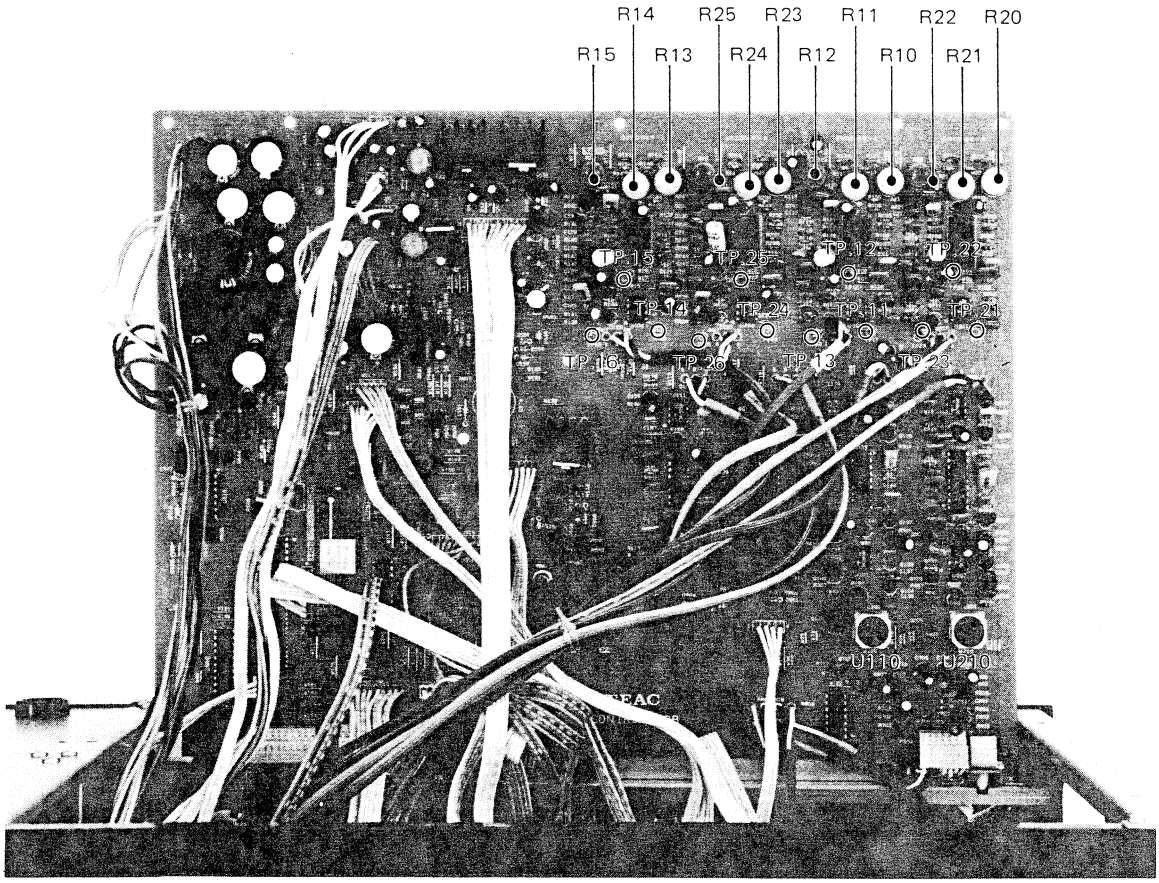

Fig. 6-18

CONTROL PCB

R10/R20	VCA SYM (Encoder)	VCA SYM (エンコーダ)
R11/R21	RMS SYM (Encoder)	RMS SYM (エンコーダ)
R12/R22	Encorder level	エンコーダ・レベル
R13/R23	VCA SYM (Decorder)	VCA SYM (デコーダ)
R14/R24	RMS SYM (Decoder)	RMS SYM (デコーダ)
R15/R25	Decoder level	デコーダ・レベル
R55	DC supply voltage (+12V)	DC電圧 (+12V)
R56	DC supply voltage (+25V)	DC電圧 (+25V)
U110/U210	MPX filter (Dolby Encoder)	MPX フィルタ (ドルビー・エンコーダ)

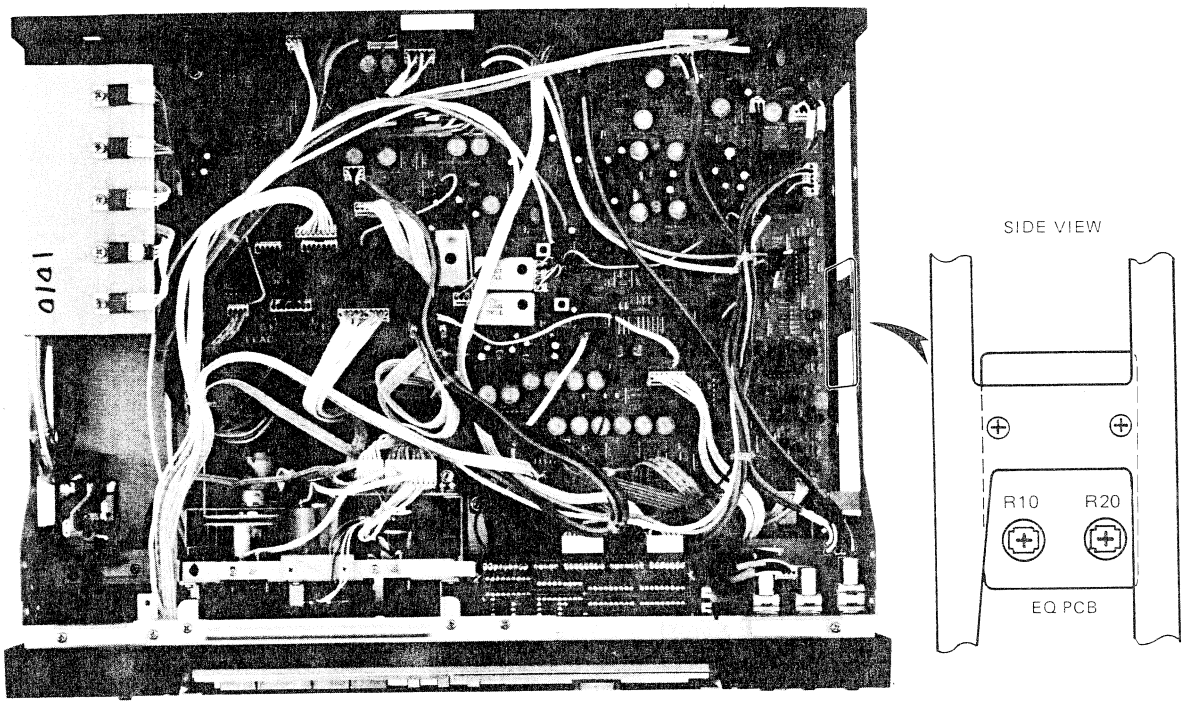

Fig. 6-19

EQ PCB

R10/R20	Record EQ (METAL) mid. range	録音イコライザ (METAL) 中域

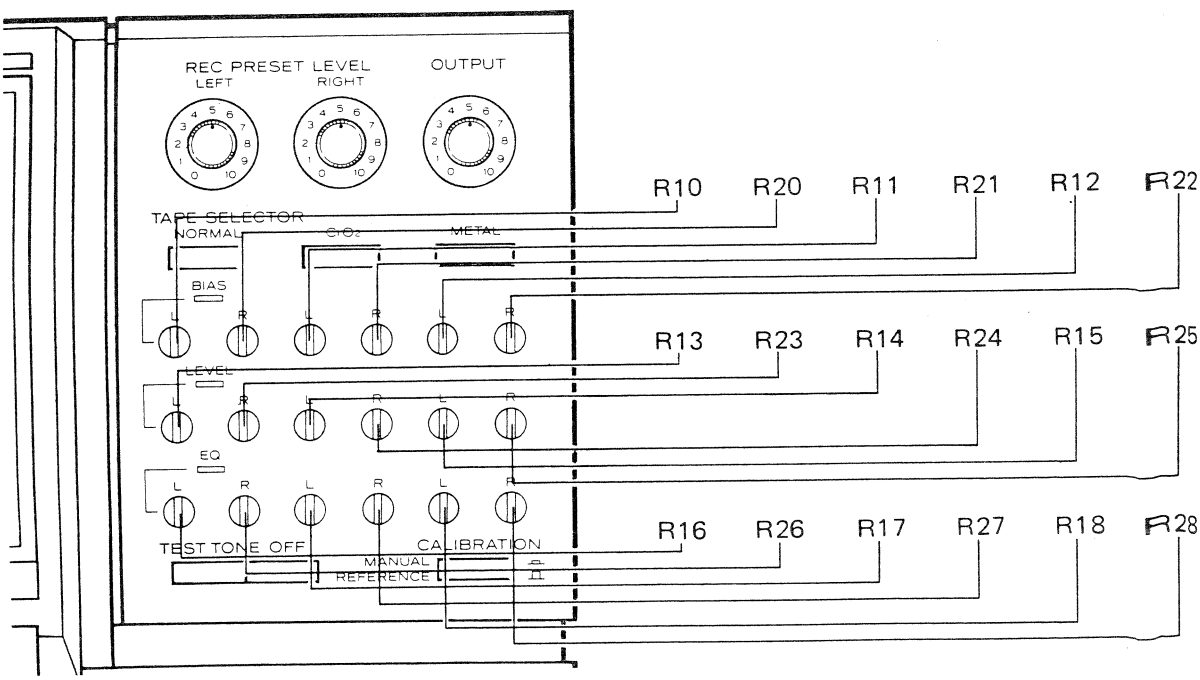

7 EXPLODED VIEWS AND PARTS LIST

EXPLODED VIEW-1

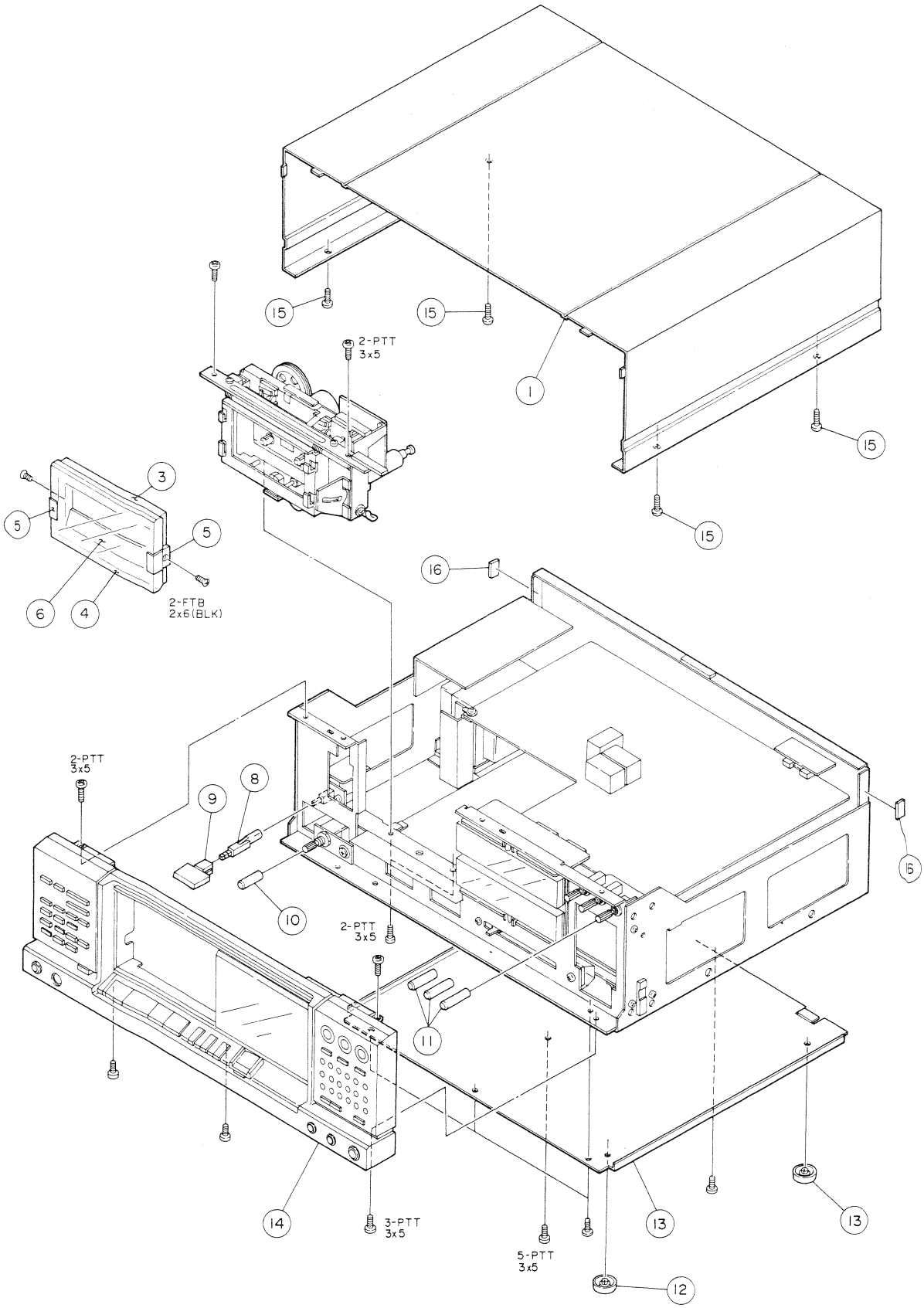

REF. NO.	PART NO.	DESCRIPTION	COMMON MODELS	REMARKS
1 - 1	*5800414400	Cover, Top		
1 - 2		Not used		
1 - 3	*5800414601	Cover B, Cassette		
1 - 4	5800412801	Cover A, Cassette		
1 - 5	*5800413300	Holder, Cover		
1 - 6	*5800407900	Name Plate, Cover		
1 - 7		Not used		
1 - 8	*5800116200	Rod, Power Switch; A	V-9	
1 - 9	5800410301	Button, Power		
1 - 10	5800410502	Knob, A		
1 - 11	5800410601	Knob, B		
1 - 12	5730003300	Foot		
1 - 13	*5800414201	Cover, Bottom		
1 - 14	*5640042200	Panel Assy, Front		
1 - 15	*5783613006	Screw, C Tite; A3 x 6		
1 - 16	*5555055000	Felt	A-650	

Parts marked with *require longer delivery time.

[U] : U.S.A. [C] : CANADA [GE] : GENERAL EXPORT [A] : AUSTRALIA
[E] : EUROPE [UK] : U.K. [L] : LIMITED AREA [J] : JAPAN

INCLUDED ACCESSORIES

REF. NO.	PART NO.	DESCRIPTION	COMMON MODELS	REMARKS
	5700044800	Z-5000 Owner's Manual [J]		
	5700045000	Z-5000 Owner's Manual [All except J]		
	5350010900	Cord Assy, Input-Output Connection		
	5740004000	Screwdriver		
	5744033700	Remote Control Unit; RC-201		

EXPLODED VIEW-2

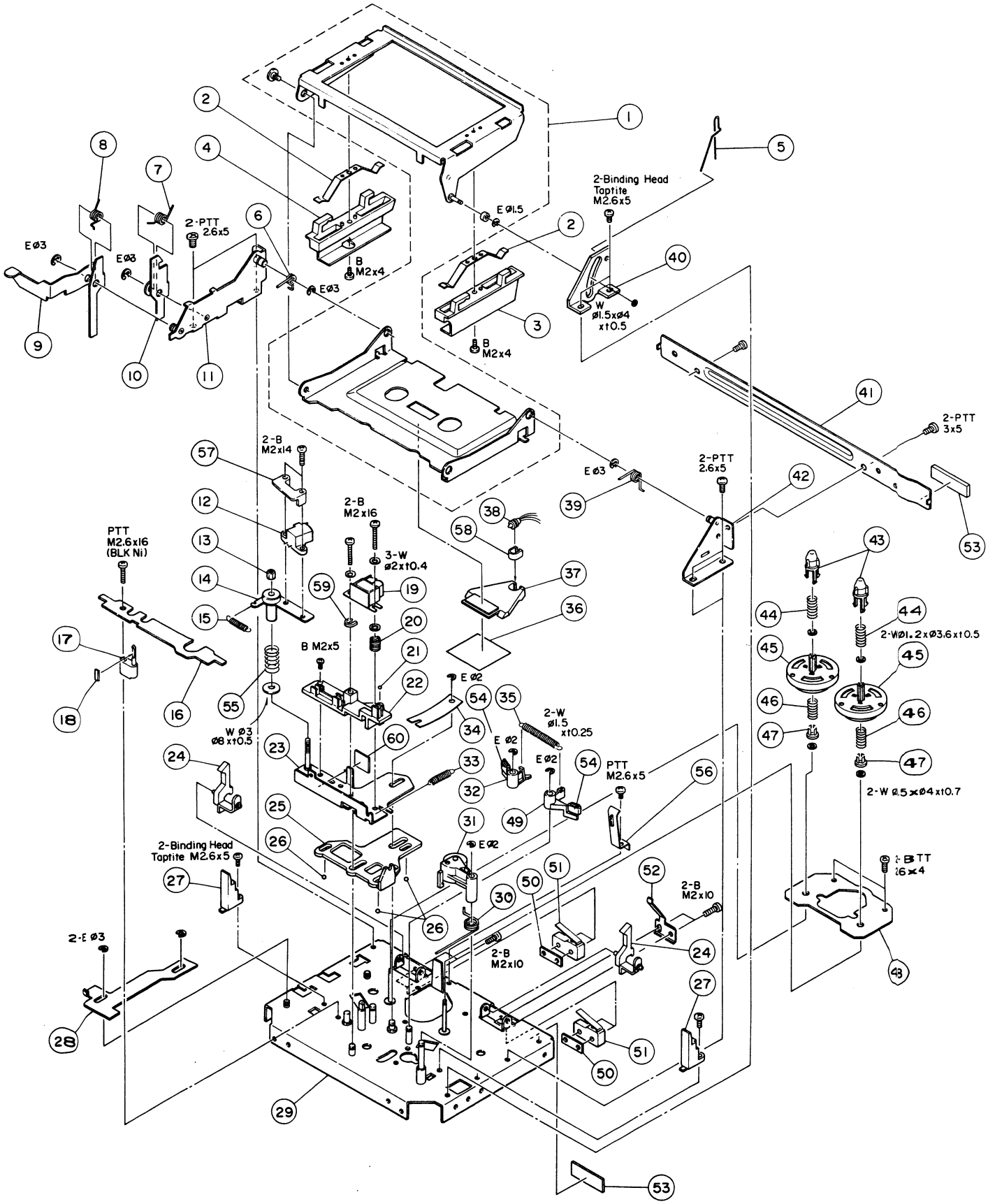

REF. NO.	PARTS NO.	DESCRIPTION	COMMON MODELS	REMARKS
2 - 1	*5800441600	Holder Assy, Cassette		
2 - 2	*5800455200	Spring, Cassette Pressure		
2 - 3	5800122100	Guide, Cassette; R		
2 - 4	5800109600	Guide, Cassette; L		
2 - 5	*5800454900	Spring, Damper		
2 - 6	*5800115500	Spring, Holder; L	V-9	
2 - 7	*5800448200	Spring, Lock		
2 - 8	*5800448300	Spring, Eject Arm		
2 - 9	*5800441900	Arm, Eject; A		
2 - 10	*5800442000	Arm, Lock		
2 - 11	*5800441400	Bracket Assy, Holder; L		
2 - 12	5569613000	Head Assy, ERASE		
2 - 13	*5781953000	Nut, M3		
2 - 14	*5800234601	Bracket Assy, Erase Head		
2 - 15	*5800519000	Spring, Erase Head		
2 - 16	*5800237801	Cover, Head; B		
2 - 17	*5800235100	Holder, Pad	V-80	
2 - 18	*5800235201	Pad, Head	V-80	
2 - 19	5378902300	Head Assy, REC/PLAY; Dual Gap		
2 - 20	*5800114700	Spring, Head	V-9	
2 - 21	5540055000	Ball, Steel; $\phi 2$	A-450	
2 - 22	*5800238302	Holder, Head; B	V-1RX	
2 - 23	*5800442400	Sub Assy, Head Base		
2 - 24	*5800117301	Arm, Sensor		
2 - 25	*5800122802	Slider		
2 - 26	5540056000	Ball, Steel; $\phi 3$		
2 - 27	*5800117400	Guide, Cassette		
2 - 28	*5800440801	Lever, Eject Prevention		
2 - 29	*5800438600	Chassis Assy, Mechanism		
2 - 30	*5800461800	Spring, Pinch Roller Arm	V-1RX	
2 - 31	5800239002	Arm Assy, Pinch Roller; B	V-1RX	
2 - 32	*5800439600	Arm, Brake; L		
2 - 33	*5800455100	Spring, Base Arm		
2 - 34	*5800235700	Spring, Base Holder; B	V-1RX	
2 - 35	*5800445800	Spring, Brake		
2 - 36	*5800452700	Plate, Reflector		
2 - 37	*5800441801	Lenz, Cassette		
2 - 38	5310006500	Lamp, DC12V		
2 - 39	*5800115600	Spring, Holder; R	V-9	
2 - 40	*5800442201	Palte, Holder Guide; B		
2 - 41	*5800408401	Bracket, Mechamism		
2 - 42	*5800441300	Bracket Assy, Holder; R		
2 - 43	*5800236500	Ring, Drive	V-70C	
2 - 44	*5800231300	Spring, Reel	V-70C	
2 - 45	*5800445700	Table Assy, Reel		
2 - 46	*5800481900	Spring, B.T		
2 - 47	*5800231500	Holder, Spring	V-70C	
2 - 48	*5200107700	PCB Assy, SENSOR		
2 - 49	*5800439700	Arm, Brake; R		
2 - 50	*5554447000	Plate, Micro Switch	A-400	
2 - 51	5301455300	Switch, Micro; SS5GL-N		
2 - 52	*5800453800	Spring, Cassette Pressure		
2 - 53	*5555570000	Cushion B, Top Cover		
2 - 54	*5800439800	Shoe, Brake		
2 - 55	*5800231300	Spring, Head; B		
2 - 56	*5800115002	Spring, Cassette Hold	V-9	
2 - 57	*5800468400	Cover, ERASE Head		
2 - 58	*5800423302	Filter	Z-6000	
2 - 59	*5800468900	Spacer, Head		
2 - 60	*5800520000	Stopper, B; E Head		

Parts marked with *require longer delivery time.

EXPLODED VIEW-3

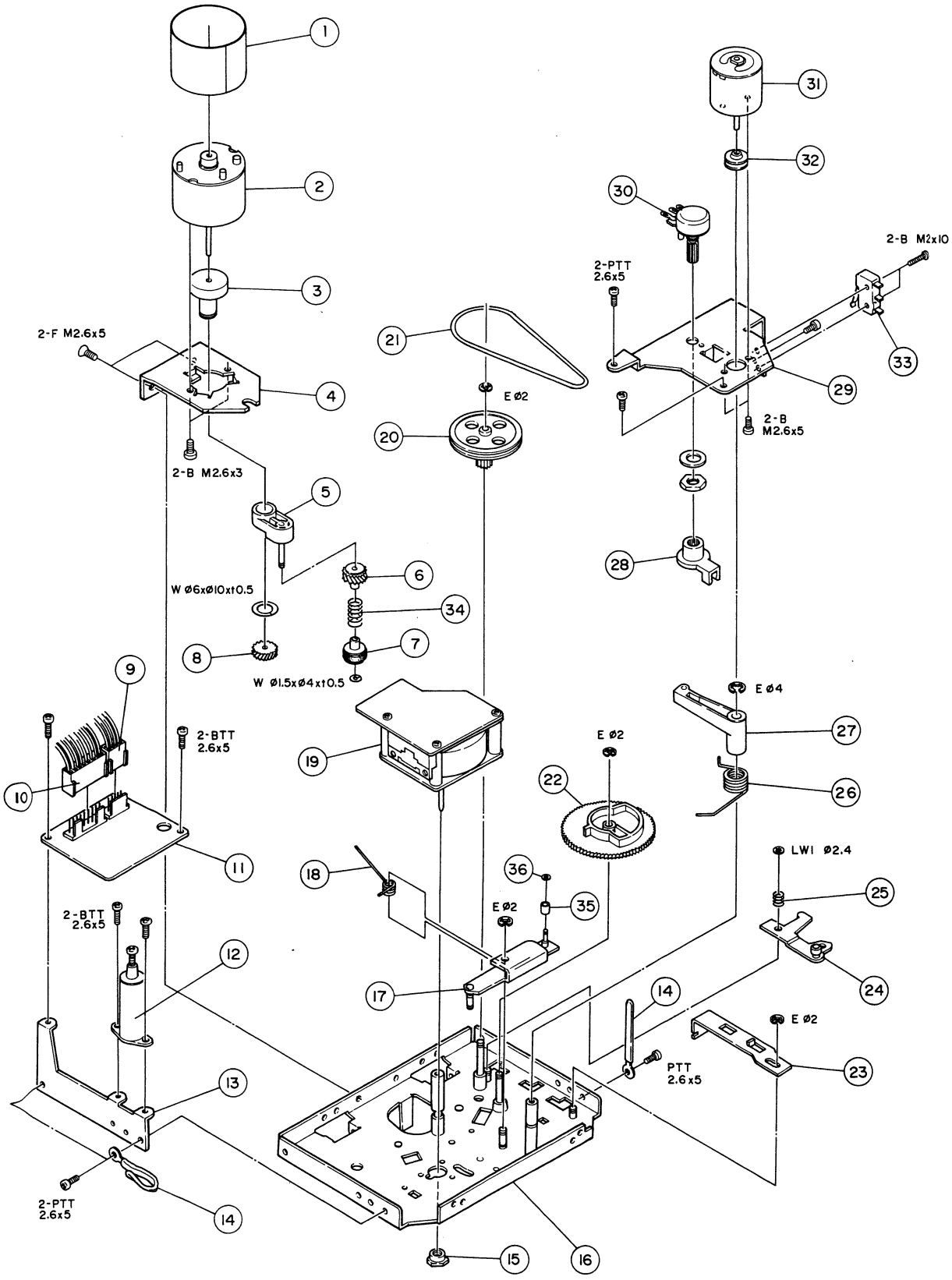

REF. NO.	PARTS NO.	DESCRIPTION	COMMON MODELS	REMARKS
3 - 1	*5800235900	Plate, Shield	V-1RX	
3 - 2	5370002501	Motor, DC Reel		
3 - 3	*5800461700	Shaft, Pulley Arm		
3 - 4	*5800430001	Plate, Reel Motor		
3 - 5	5800461500	Arm Assy, Pulley		
3 - 6	5800461600	Pulley Assy, Gear; B		
3 - 7	5800430301	Pulley Assy		
3 - 8	5800232500	Pulley, Gear; A		
3 - 9	*5122167000	Connector Socket, 5P		
3 - 10	*5122172000	Connector Socket, 10P		
3 - 11	*5200107602	PCB Assy, Mechanism		
3 - 12	5800131802	Damper Assy		
3 - 13	*5800441001	Plate, PCB Bracket		
3 - 14	*5581038000	Clamper, Cord; A		
3 - 15	*5800239200	Nut, Motor Hold		
3 - 16	*5800438600	Chassis Assy, Mechanism		
3 - 17	*5800440301	Arm Assy, Base		
3 - 18	*5800445900	Spring, Base Arm Return		
3 - 19	5370002301	Motor Assy, DC Capstan	V-9	
3 - 20	5800117200	Pulley, Speed Reduction	V-9	
3 - 21	5800419200	Belt, Pulley	Z-6000	
3 - 22	5800428900	Cam, Control	Z-6000	
3 - 23	*5800440901	Lever, Eject		
3 - 24	*5800439901	Arm Assy, Eject		
3 - 25	*5800446000	Spring, Eject Arm		
3 - 26	*5800453700	Spring, Balance Arm		
3 - 27	*5800418900	Arm Assy, Balance		
3 - 28	*5800418800	Joint	Z-6000	
3 - 29	*5800441103	Bracket, Motor		
3 - 30	5282009601	Variable Resistor, 10kΩ(B)		
3 - 31	5370001400	Motor, DC		
3 - 32	5800123300	Pulley, V		
3 - 33	5301455700	Switch, Micro; SS-5N		
3 - 34	*5800430200	Spring, Pulley		
3 - 35	*5800425800	Roller		
3 - 36	*5705331500	Washer		

Parts marked with *require longer delivery time.

(Continuted from page 37)

REF. NO.	PARTS NO.	DESCRIPTION	COMMON MODELS	REMARKS
5 - 50	*5800467300	Washer		
5 - 51	*5800323500	Bracket		
5 - 52	*5800467400	Seal [All except GE]		
5 - 53	*5800140300	Bracket, Line Ampl; F		
5 - 54	*5800468700	Bracket, PCB; E		
5 - 55	*5800452400	Bracket, Fuse [E, UK]		
5 - 56	*5200118700	PCB Assy, EQ [All except U , C]		
	*5200118710	PCB Assy, EQ [U, C]		
5 - 57	*5200125700	PCB Assy, JACK [All except U, C]		
	*5200125710	PCB Assy, JACK [U, C]		
5 - 58	⚠ 5220415500	IC NJM7812A		
5 - 59	⚠ 5147058000	IC NJM7805A		
5 - 60	*5200112700	PCB Assy, FUSE [E, UK]		
5 - 61	⚠ 5302101700	Voltage Selector [GE]		

[U] : U.S.A. [C] : CANADA [GE] : GENERAL EXPORT [A] : AUSTRALIA
[E] : EUROPE [UK] : U.K. [L] : LIMITED AREA [J] : JAPAN

EXPLODED VIEW-4

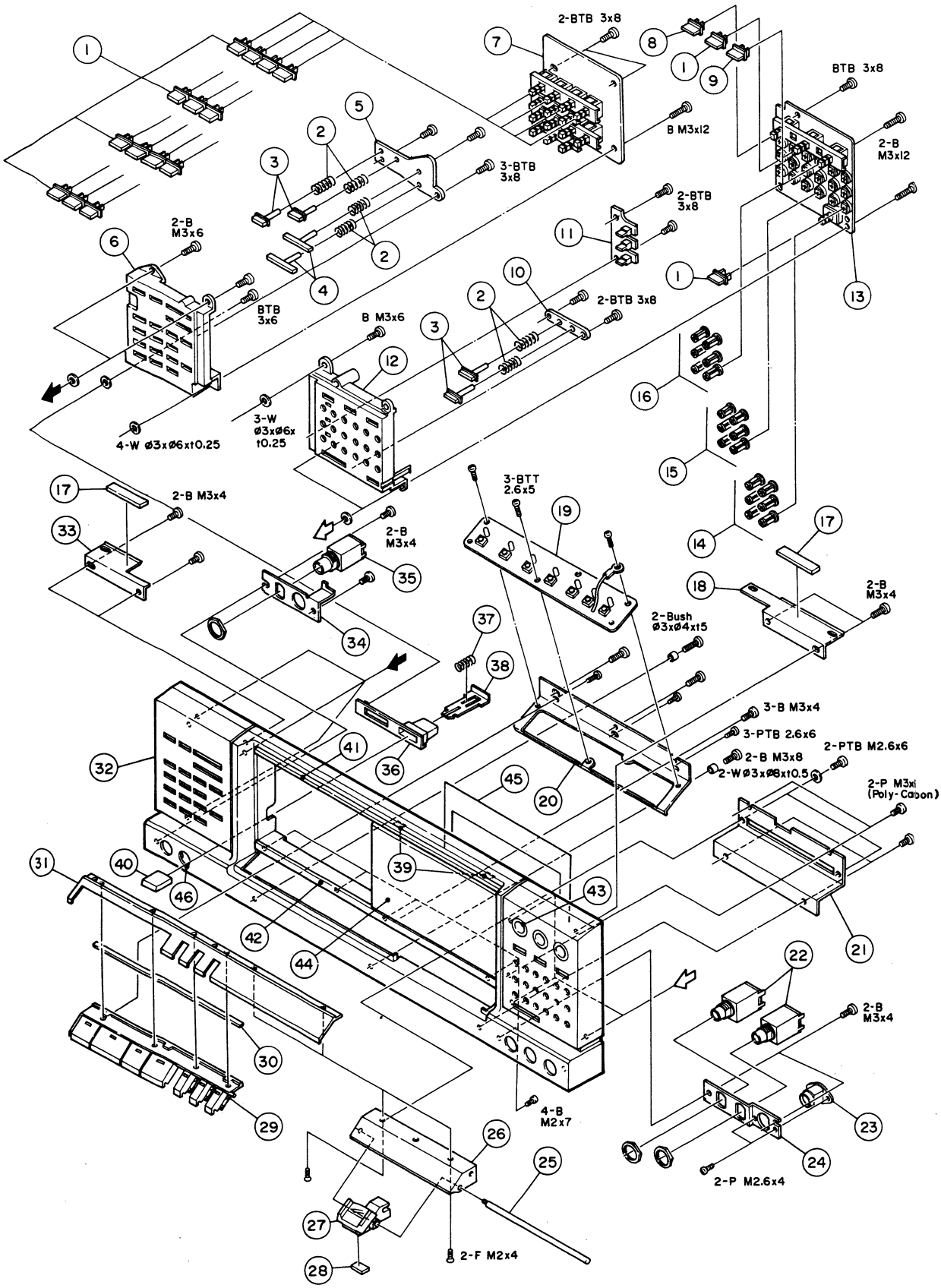

REF. NO.	PARTS NO.	DESCRIPTION	COMMON MODELS	REMARKS
4 - 1	5800409800	Button, A		
4 - 2	*5800412000	Spring, Button		
4 - 3	5800410100	Button, D Assy		
4 - 4	5800410201	Button, E Assy		
4 - 5	*5800411300	Plate, Guide; L		
4 - 6	*5800412902	Escutcheon, Switch; L		
4 - 7	*5200106100	PCB Assy, SWITCH; L		
4 - 8	5800409900	Button, B		
4 - 9	5800410000	Button, C		
4 - 10	*5800411400	Plate, Guide; R		
4 - 11	*5200106700	PCB Assy, LED		
4 - 12	*5800413002	Escutcheon, Switch; R		
4 - 13	*5200107401	PCB Assy, SWITCH; R		
4 - 14	*5800410700	Cap, A		
4 - 15	*5800410800	Cap, B		
4 - 16	*5800410900	Cap, C		
4 - 17	*5555570000	Cushion, Top Cover; B		
4 - 18	*5800408300	Bracket, Panel; R		
4 - 19	*5200107500	PCB Assy, OPERATION		
4 - 20	*5800412602	Bracket, Operation PCB		
4 - 21	*5800408001	Bracket, VR Escutcheon		
4 - 22	5330008400	Jack, MIC		
4 - 23	*5334027500	Connector Socket, 4P		
4 - 24	*5800408701	Bracket, Jack; B		
4 - 25	*5800408800	Shaft		
4 - 26	*5800413501	Escutcheon, Slide VR		
4 - 27	5800411702	Button Assy, Slide VR		
4 - 28	*5800468800	Spacer, B		
4 - 29	5800454802	Button Assy, Operation		
4 - 30	*5800469601	Spacer, C		
4 - 31	*5800407803	Panel, Opration		
4 - 32	*5800407003	Panel, Front		
4 - 33	*5800408200	Bracket, L		
4 - 34	*5800408601	Bracket, Jack; A		
4 - 35	5330008500	Jack, Phone		
4 - 36	*5800413402	Escutcheon, Power Button		
4 - 37	*5800454100	Spring, Eject		
4 - 38	*5800408101	Plate, Eject		
4 - 39	*5800470000	Cushion		
4 - 40	5800410400	Button, Eject		
4 - 41	*5800412101	Sush A		
4 - 42	*5800412200	Sush B		
4 - 43	*5800411202	Escutcheon, VR		
4 - 44	*5800411601	Window, Display		
4 - 45	*5800411501	Filter		
4 - 46	*5800411101	Escutcheon, Button		

Parts marked with*require longer delivery time.

EXPLODED VIEW-5

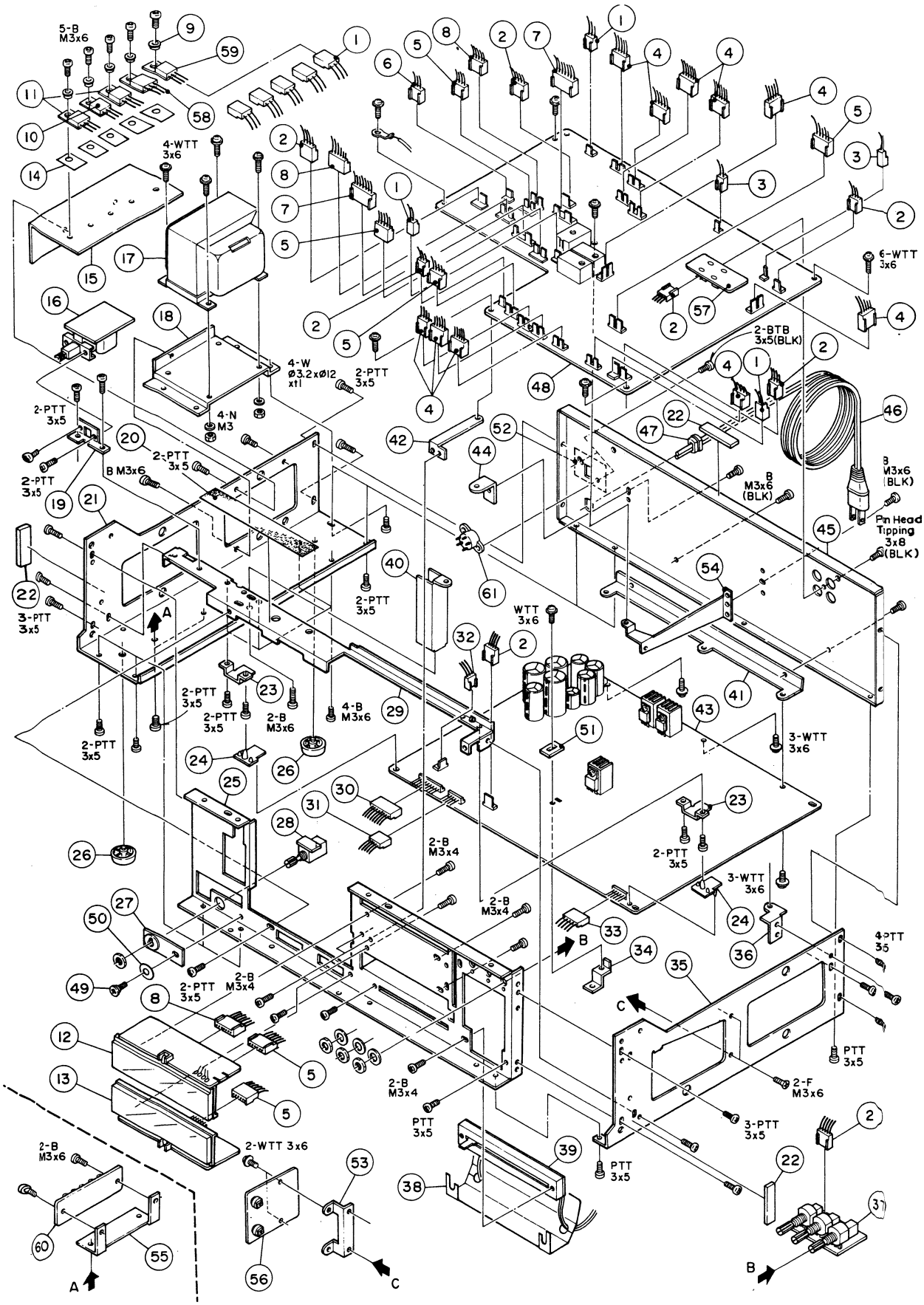

REF. NO.	PARTS NO.	DESCRIPTION	COMMON MODELS	REMARKS
5 - 1	*5122165000	Connector Socket, 3P		
5 - 2	*5122166000	Connector Socket, 4P		
5 - 3	*5122164000	Connector Socket, 2P		
5 - 4	*5122168000	Connector Socket, 6P		
5 - 5	*5122169000	Connector Socket, 7P		
5 - 6	*5122167000	Connector Socket, 5P		
5 - 7	*5122172000	Connector Socket, 10P		
5 - 8	*5122170000	Connector Socket, 8P		
5 - 9	*5033295000	Tube, Insulating		
5 - 10	⚠ 5145129000	Transistor, 2SB-507E		
5 - 11	⚠ 5145188000	Transistor, 2SD-313E		
5 - 12	5296006400	FL Countor		
5 - 13	5296006301	FL Meter		
5 - 14	*5033291000	Plate, Insulating		
5 - 15	*5800447900	Heat Sink		
5 - 16	*5200106900	PCB Assy, POWER SWITCH [J]		
	*5200106910	PCB Assy, POWER SWITCH [U]		
	*5200106920	PCB Assy, POWER SWITCH [C]		
	*5200106930	PCB Assy, POWER SWITCH [GE]		
	*5200107940	PCB Assy, POWER SWITCH [E, UK, A]		
5 - 17	⚠*5320021300	Transformer, Power [J]		
	⚠*5320021400	Transformer, Power [U, C]		
	⚠*5320021500	Transformer, Power [GE]		
	⚠*5320021600	Transformer, Power [E, UK, A]		
5 - 18	*5800444900	Bracket, Transformer		
5 - 19	*5800408500	Bracket, Power Switch		
5 - 20	*5800454500	Mask, A		
5 - 21	*5800413901	Chassis, L		
5 - 22	*5555570000	Cushion B, Top Cover		
5 - 23	*5800429700	Bracket, Hinge		
5 - 24	*5800273000	Hinge, PCB		
5 - 25	*5800413701	Chassis, Front		
5 - 26	5730003300	Foot		
5 - 27	*5800453600	Plate, TIMER SWITCH		
5 - 28	*5200106300	PCB Assy, TIMER [All except U, C]		
	*5200106310	PCB Assy, TIMER [U, C]		
5 - 29	*5800414101	Bracket, PCB; C		
5 - 30	*5336125000	Connector Socket, 10P		
5 - 31	*5336124600	Connector Socket, 6P		
5 - 32	*5336124300	Connector Socket, 3P		
5 - 33	*5336124700	Connector Socket, 7P		
5 - 34	*5800213700	Bracket, PCB		
5 - 35	*5800413803	Chassis, R		
5 - 36	*5800482400	Bracket, PCB		
5 - 37	*5200106500	PCB Assy, VR [All except U, C]		
	*5200106510	PCB Assy, VR [U, C]		
5 - 38	*5800468300	Paper, Shield A		
5 - 39	5284006900	VR, Slide; 50kΩ(A)		
5 - 40	*5800412300	Bracket, PCB; A		
5 - 41	*5800412400	Bracket, PCB; B		
5 - 42	*5800435600	Bracket, PCB; D		
5 - 43	*5200107203	PCB Assy, CONTROL [All except U, C]		
	*5200107213	PCB Assy, CONTROL [U, C]		
5 - 44	*5800249801	Bracket, PCB; B	V-70C	
5 - 45	*5800414003	Panel, Rear		
5 - 46	⚠*5128027000	Cord, AC Power [J]		
	⚠*5128047000	Cord, AC Power [UK]		
	⚠*5350010800	Cord, AC Power [U, C, GE]		
	⚠*5350008200	Cord, AC Power [E]		
	⚠*5350008300	Cord, AC Power [A]		
5 - 47	*5534660000	Strain Relief, AC Power Cord [All except UK]		
	*5317001700	Strain Relief, AC Power Cord [UK]		
5 - 48	*5200105903	PCB Assy, AMPL [All except U, C]		
	*5200105913	PCB Assy, AMPL [U, C]		
5 - 49	*5581056000	Screw, Shoulder Head	A-304	

(Continuted on page 33)

Parts marked with *require longer delivery time. [U] : U.S.A. [C] : CANADA [GE] : GENERAL EXPORT [A] : AUSTRALIA [E] : EUROPE [UK] : U.K. [L] : LIMITED AREA [J] : JAPAN

ASSEMBLING HARDWARE CODING LIST

All screws conform to ISO standards, and have crossrecessed heads, unless otherwise noted.
ISO screws have the head inscribed with a point as in the figure to the right.

FOR EXAMPLE:

B M 3 x 6

- Length in mm (L)
- Diameter in mm (D) *
- Metric System
- Nomenclature

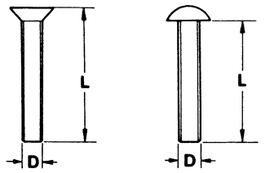

* Inner dia. for washers and nuts

	Code	Name	Type
MACHINE SCREW	R	Round Head Screw	
	P	Pan Head Screw	
	T	Stove Head Screw (Truss)	
	B	Binding Head Screw	
	F	Flat Countersunk Head Screw	
	O	Oval Countersunk Head Screw	
WOOD SCREW	RW	Round Head Wood Screw	
TAPTITE SCREW	PTT	Pan Head Taptite Screw	
	WTT	Washer Head Taptite Screw	
SEMS SCREW	BSA	Binding Head SEMS Screw(A Type)	
	BSB	Binding Head SEMS Screw(B Type)	
	BSF	Binding Head SEMS Screw(F Type)	
	PSA	Pan Head SEMS Screw(A Type)	
	PSB	Pan Head SEMS Screw(B Type)	

	Code	Name	Type
TAPPING SCREW	BTA	Binding Head Tapping Screw(A Type)	
	BTB	Binding Head Tapping Screw(B Type)	
	RTA	Round Head Tapping Screw(A Type)	
	RTB	Round Head Tapping Screw(B Type)	
SETSCREW	SF	Hex Socket Setscrew(Flat Point)	
	SC	Hex Socket Setscrew(Cup Point)	
	SS	Slotted Socket Setscrew(Flat Point)	
WASHER	E	E-Ring (Retaining Washer)	
	W	Flat Washer (Plain)	
	SW	Lock Washer (Spring)	
	LWI	Lock Washer (Internal Teeth)	
	LWE	Lock Washer (External Teeth)	
	TW	Trim Washer (Countersunk)	
NUT	N	Hex Nut	

8 PC BOARDS AND PARTS LIST

PC Boards shown viewed from foil side.

AMPL. PCB ASSY

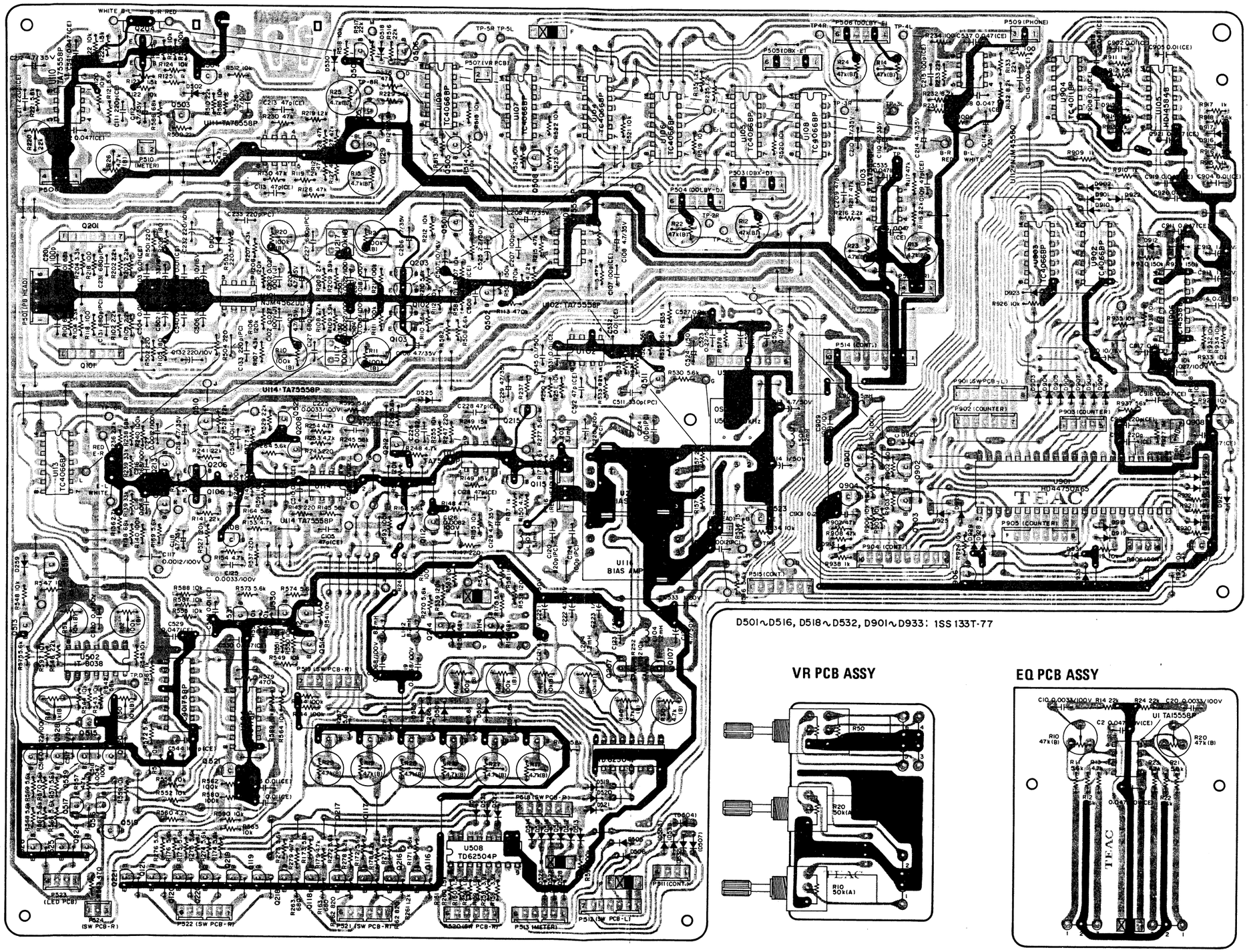

VR PCB ASSY

EQ PCB ASSY

8 PC BOARDS AND PARTS LIST

PC Boards shown viewed from foil side.

AMPL. PCB ASSY

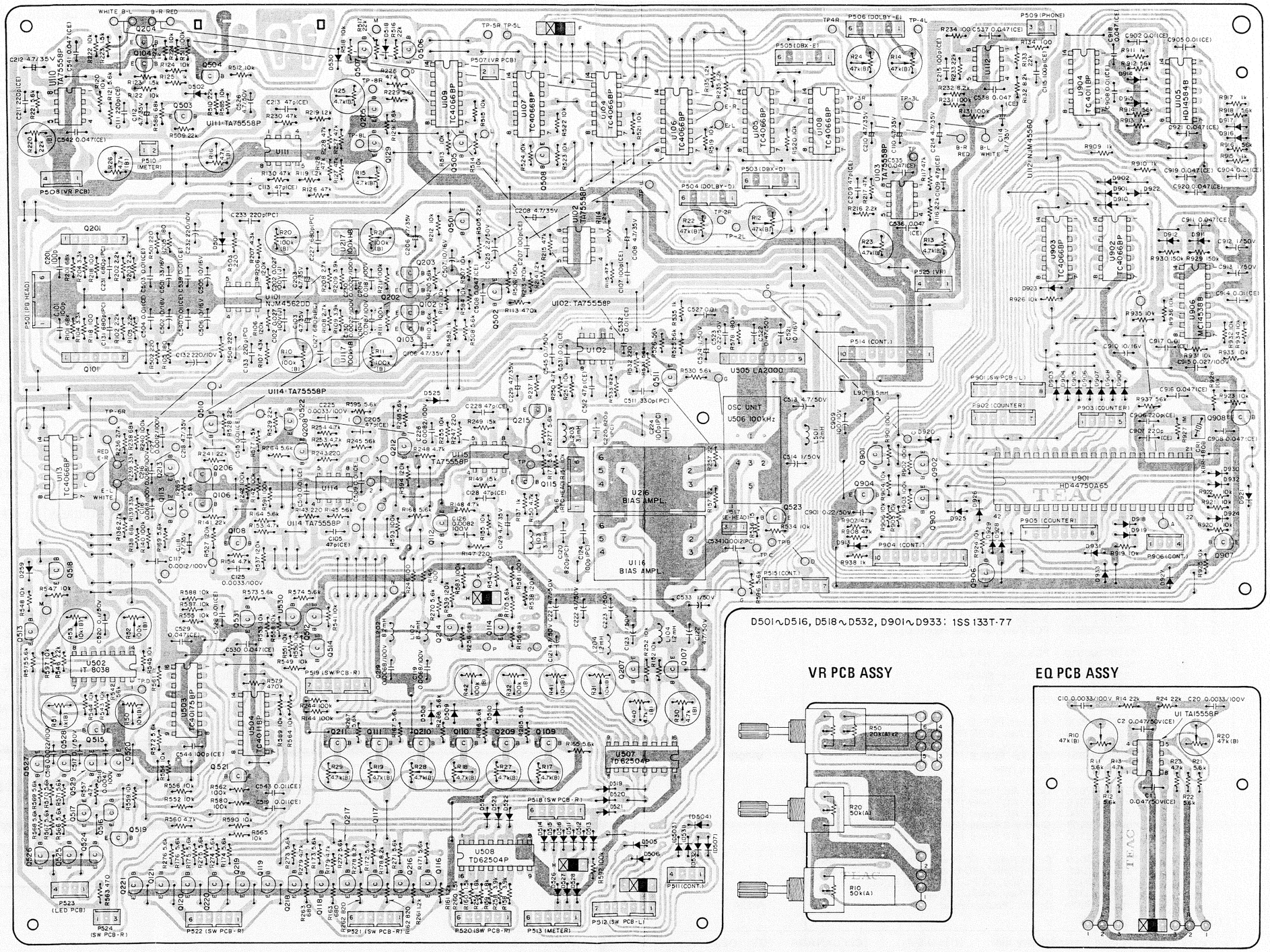

CONTROL PCB ASSY

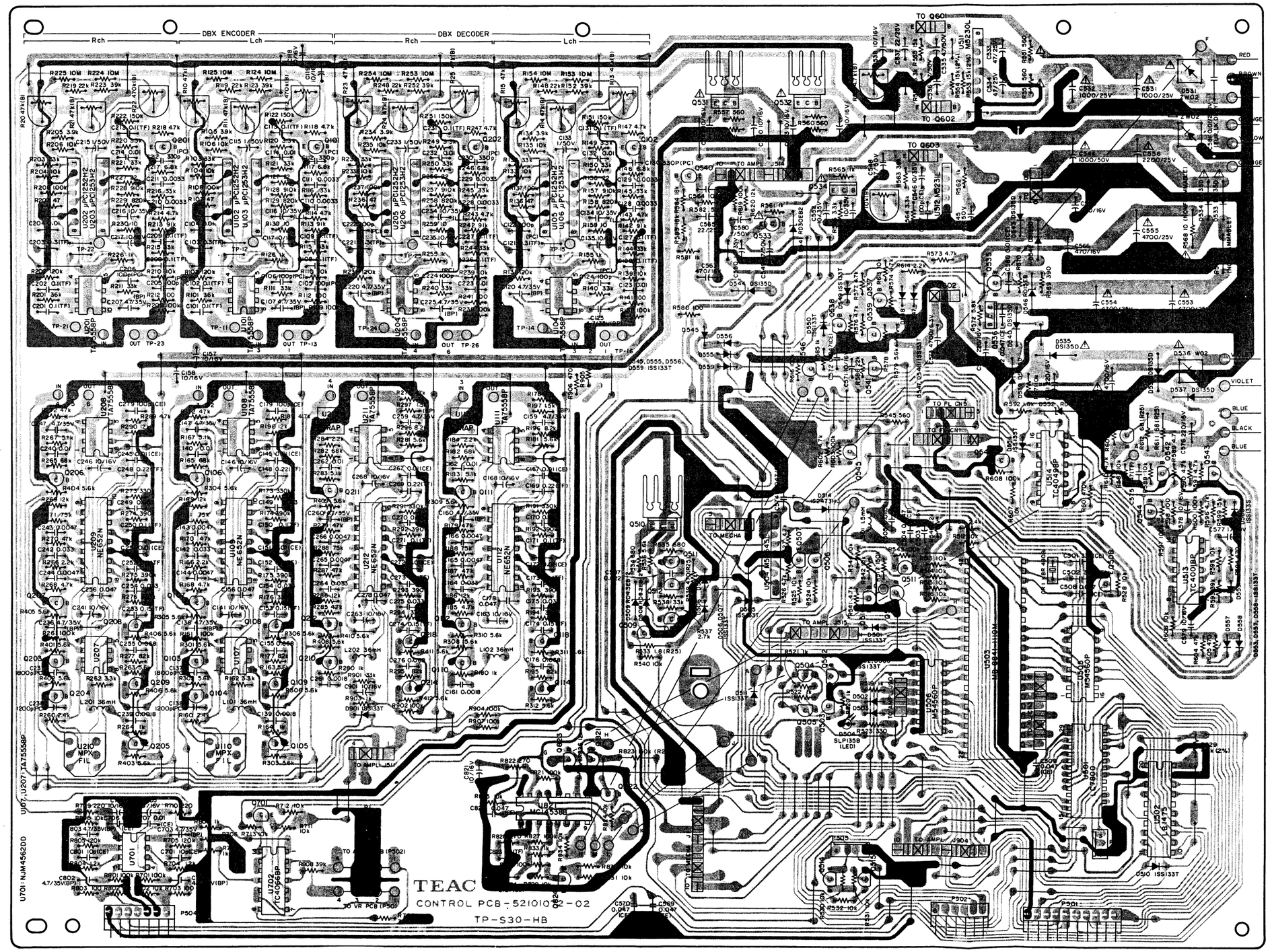

MECHANISM PCB ASSY

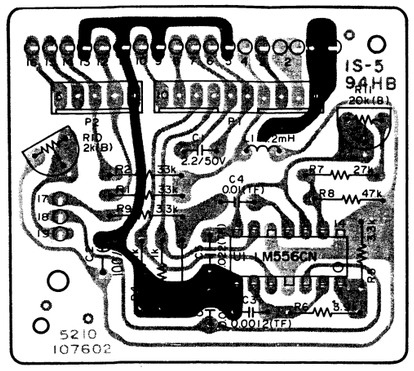

SENSOR PCB ASSY

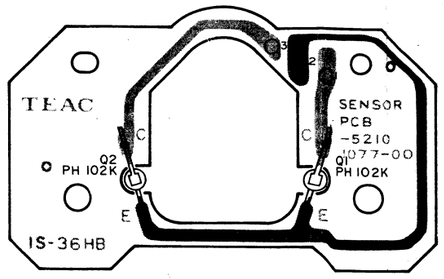

OPERATION SWITCH PCB ASSY

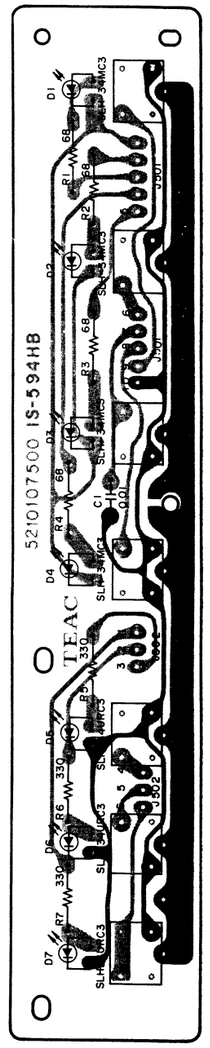

SWITCH PCB R ASSY

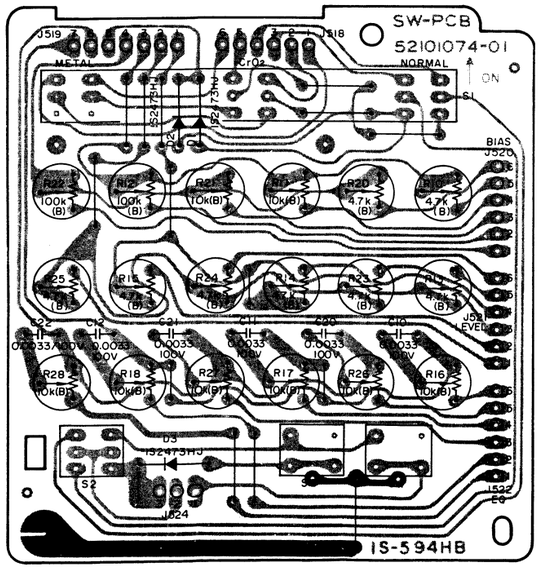

SWITCH PCB L ASSY

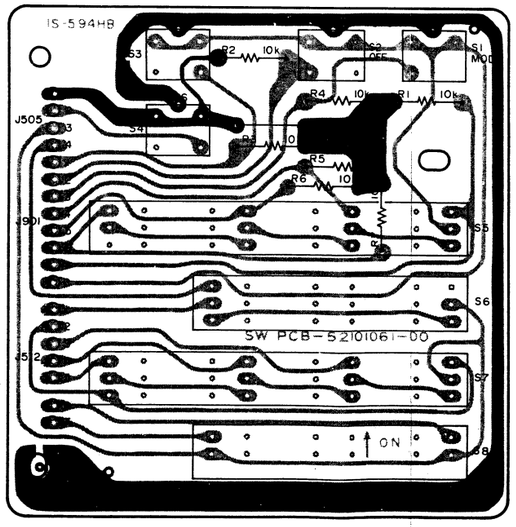

NOTES

1. PC boards are shown viewed from foil side.
2. The colors on the PC board illustrations have the following significance:
   - : +B power supply circuit
   - : −B power supply circuit
   - : GND
   - : other
3. Resistors
   - Resistor values are in ohms (k=1000ohms)
4. - All capacitor values are in microfarads (p=picofarads).

注

1．基板図はパターン面が示されています．

2．プリント・パターンは次のように色別されています．

- ：＋B電源回路
- ：－B電源回路
- ：GND
- ：その他のパターン

3．抵抗の単位はΩ（k＝kΩ，M＝MΩ）．

4．コンデンサの単位は，μF（p＝pF）．

CONTROL PCB ASSY

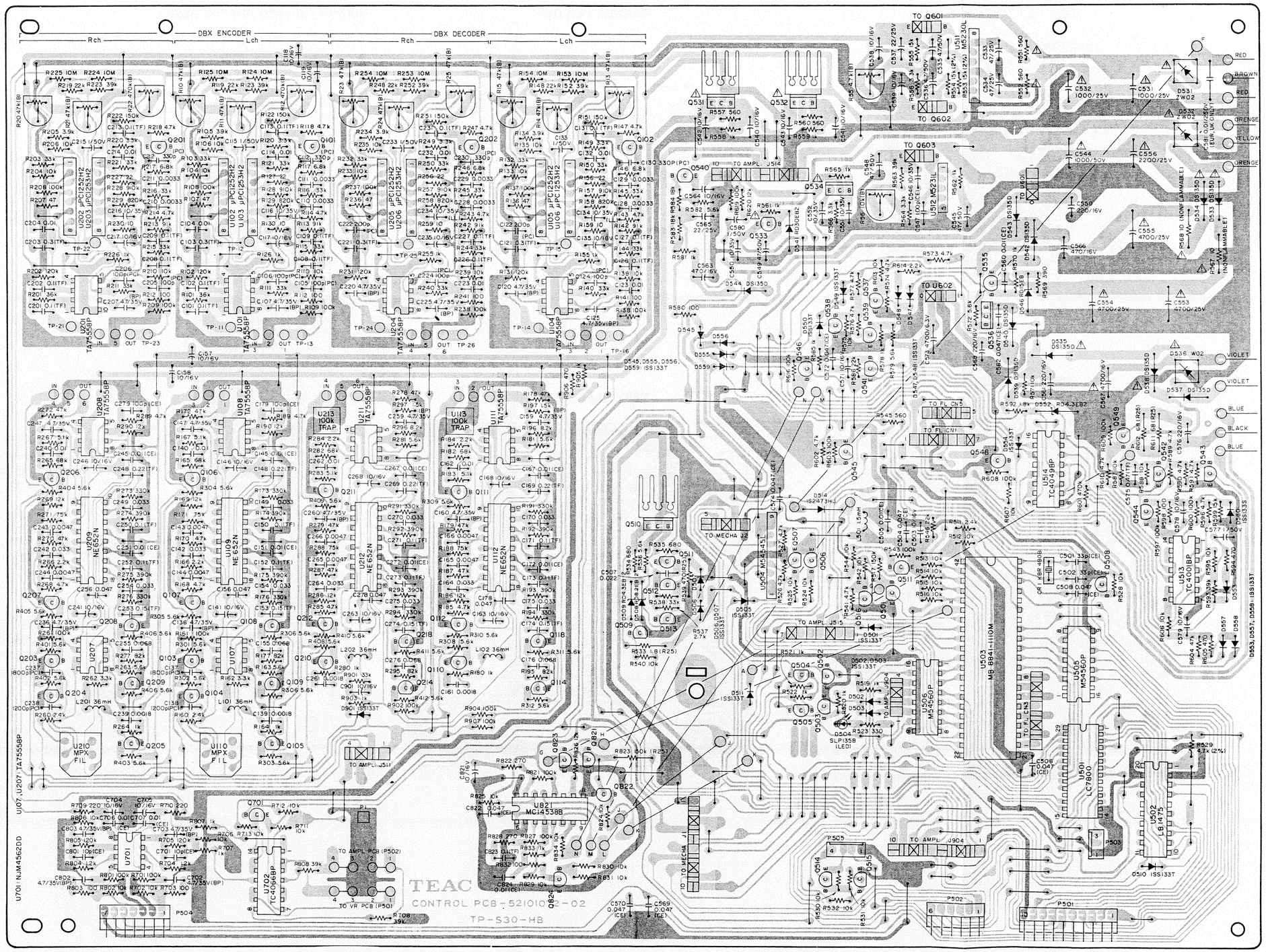

MECHANISM PCB ASSY

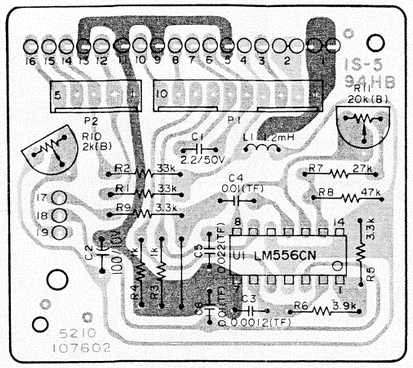

SENSOR PCB ASSY

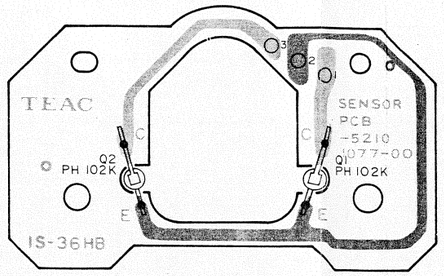

OPERATION SWITCH PCB ASSY

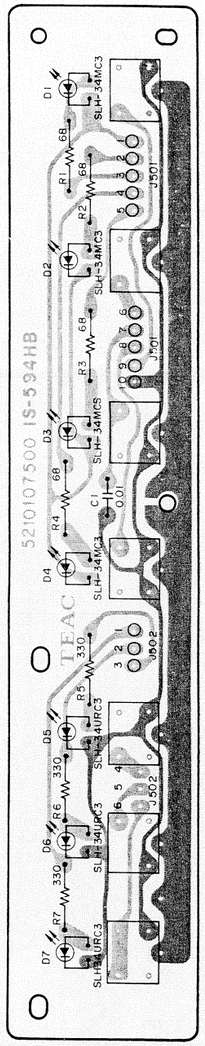

SWITCH PCB R ASSY

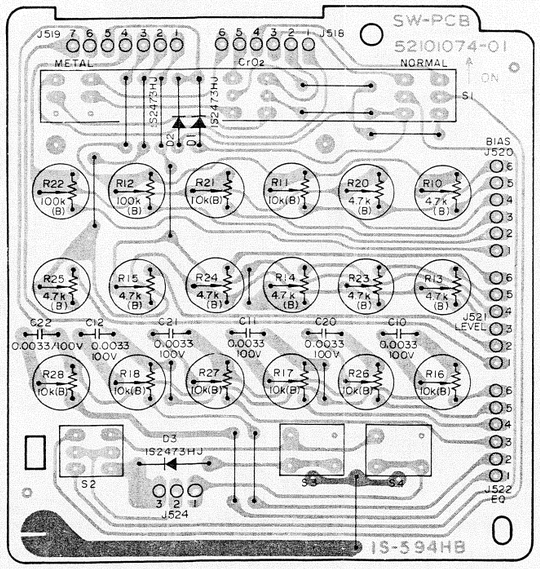

SWITCH PCB L ASSY

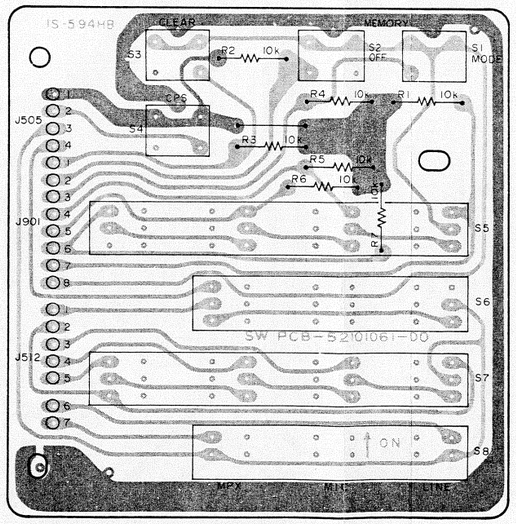

NOTES

1. PC boards are shown viewed from foil side.
2. The colors on the PC board illustrations have the following significance:
   - : +B power supply circuit
   - : −B power supply circuit
   - : GND
   - : other
3. Resistors
   - Resistor values are in ohms (k=1000ohms)
4. • All capacitor values are in microfarads (p=picofarads).

注

1．基板図はパターン面が示されています．
2．プリント・パターンは次のように色別されています．
   - ：＋B電源回路
   - ：－B電源回路
   - ：GND
   - ：その他のパターン
3．抵抗の単位はΩ（k＝kΩ，M＝MΩ）．
4．コンデンサの単位は，μF（p＝pF）．

AMPL. PCB ASSY

REF. NO.	PARTS NO.	DESCRIPTION
	5200105903	PCB Assy [All except U, C]
	5200105913	PCB Assy [U, C]
	5210105902	PCB [All except U, C]
	5210106002	PCB [U, C]
	IC's	
U101	5220412500	NJM4562DD
U102, U103	5220410900	TA75558P
U104~U109	5220013400	TC4066BP
U110, U111	5220410900	TA75558P
U112	5220414400	NJM4556D
U113	5220013400	TC4066BP
U114, U115	5220410900	TA75558P
U116, U216	5292202300	Bias Ampl.
U117, U217	5286000200	Coil, Trap
U501	5220410900	TA75558P
U502	5220418100	IT8038
U503	5220020800	TC40175BP
U504	5220019100	TC4011BP
U505	5220418000	LA2000
U506	5292202201	Bias OSC
U507, U508	5293000900	TD62504P
U901	5220804000	HD44750A65
U902, U903	5220013400	TC4066BP
U904	5220019100	TC4011BP
U905	5220019800	HD14584B
U906	6048948000	MC14538B
	TRANSISTORS	
Q101, Q201	5232006100	FET, 2SK270GR
Q102, Q202	5145091000	2SC945AK
Q103, Q203	5145185000	2SD655E
Q104, Q204	5145185000	2SD655E
Q105, Q205	5145091000	2SC945AK
Q106, Q206	5230775000	2SC2878B
Q107, Q207	5231758500	2SD1140
Q108, Q208	5145091000	2SC945AK
Q109, Q209	5145091000	2SC945AK
Q110, Q210	5145091000	2SC945AK
Q111, Q211	5145091000	2SC945AK
Q112, Q212	5145091000	2SC945AK
Q113, Q213	5145091000	2SC945AK
Q114, Q214	5145091000	2SC945AK
Q115, Q215	5230775000	2SC2878B
Q116, Q216	5145091000	2SC945AK
Q117, Q217	5145091000	2SC945AK
Q118, Q218	5145091000	2SC945AK
Q119, Q219	5145091000	2SC945AK
Q120, Q220	5145091000	2SC945AK
Q121, Q221	5145091000	2SC945AK
Q501	5042553000	2SA733P
Q502	5145091000	2SC945AK
Q503	5042553000	2SA733P
Q504, Q505	5145091000	2SC945AK
Q506	5042553000	2SA733P
Q507, Q508	5145091000	2SC945AK
Q510	5042553000	2SA733P
Q511~Q514	5145091000	2SC945AK
Q515	5230775000	2SC2878B
Q516~Q519	5042553000	2SA733P
Q520~Q531	5145091000	2SC945AK
Q901~Q903	5142553000	2SA733P
Q904~Q907	5145091000	2SC945AK

REF. NO.	PARTS NO.	DESCRIPTION
	DIODES	
D501~D516	5224015020	1SS133T77
D518~D532	5224015020	1SS133T77
D901~D933	5224015020	1SS133T77
	CARBON RESISTORS	
	All resistors are rated ±5% tolerance and ¼W.	
R101, R201	5240032620	68kΩ
R102, R202	5240029020	2.2kΩ
R103, R203	5240029020	2.2kΩ
R104, R204	5240029420	3.3kΩ
R105, R205	5240026420	180Ω
R106, R206	5240033220	120kΩ
R107, R207	5240029720	4.3kΩ
R108, R208	5240029220	2.7kΩ
R109, R209	5240029620	3.9kΩ
R110, R210	5240030020	5.6kΩ
R111, R211	5240033020	100kΩ
R112, R212	5240030620	10kΩ
R113, R213	5240034620	470kΩ
R114, R214	5240028420	1.2kΩ
R115, R215	5240032220	47kΩ
R116, R216	5240029020	2.2kΩ
R117, R217	5240032220	47kΩ
R118, R218	5240025820	100Ω
R119, R219	5240028420	1.2kΩ
R120	5240030620	10kΩ
R121, R221	5240030020	5.6kΩ
R122, R222	5240030620	10kΩ
R123, R223	5240028620	1.5kΩ
R124, R224	5240030620	10kΩ
R125, R225	5240028220	1kΩ
R126, R226	5240032220	47kΩ
R127, R227	5240032220	47kΩ
R128, R228	5240032220	47kΩ
R129, R229	5240030020	5.6kΩ
R130, R230	5240032220	47kΩ
R131, R231	5240033020	100kΩ
R132, R232	5240030220	6.8kΩ
R133, R233	5240031420	22kΩ
R134, R234	5240025820	100Ω
R135, R235	5240028420	1.2kΩ
R136, R236	5240029220	2.7kΩ
R137, R237	5240028220	1kΩ
R138, R238	5240032620	68kΩ
R139, R239	5240031820	33kΩ
R140, R240	5240033020	100kΩ
R141, R241	5240030620	10kΩ
R142, R242	5240033020	100kΩ
R143, R243	5240026620	220Ω
R144, R244	5240033020	100kΩ
R145, R245	5240032420	56kΩ
R146, R246	5181458000	100Ω
R147, R247	5240026620	220Ω
R148, R248	5240029820	4.7kΩ
R149, R249	5240031020	15kΩ
R150, R250	5240029820	4.7kΩ

[U] : U.S.A. [C] : CANADA [GE] : GENERAL EXPORT [A] : AUSTRALIA
[E] : EUROPE [UK] : U.K. [L] : LIMITED AREA [J] : JAPAN

REF. NO.	PARTS NO.	DESCRIPTION
R151, R251	5240030620	10kΩ
R152, R252	5240030620	10kΩ
R153, R253	5240029820	4.7kΩ
R154, R254	5240029820	4.7kΩ
R155, R255	5240030620	10kΩ
R156, R256	5240032620	68kΩ
R157, R257	5240024220	22Ω
R158, R258	5240029620	3.9kΩ
R159, R259	5240028820	1.8kΩ
R160, R260	5240028620	1.5kΩ
R161, R261	5240028420	1.2kΩ
R162, R262	5240028020	820Ω
R163, R263	5240027820	680Ω
R164, R264	5240030020	5.6kΩ
R165, R265	5240030020	5.6kΩ
R166, R265	5240030020	5.6kΩ
R167, R267	5240030020	5.6kΩ
R168, R268	5240030020	5.6kΩ
R169, R269	5240030020	5.6kΩ
R170, R270	5240030020	5.6kΩ
R171, R271	5240030020	5.6kΩ
R172, R272	5240030020	5.6kΩ
R173, R273	5240030020	5.6kΩ
R174, R274	5240030020	5.6kΩ
R175, R275	5240030020	5.6kΩ
R176, R276	5240030020	5.6kΩ
R177, R277	5240030620	10kΩ
R178, R278	5240030420	8.2kΩ
R179, R279	5240029820	4.7kΩ
R501 ~R504	5240026620	220Ω
R505	5240031420	22kΩ
R506	5240033420	150kΩ
R507	5240030620	10kΩ
R508	5240030020	5.6kΩ
R509, R510	5240031420	22kΩ
R511	5240033020	100kΩ
R512~R515	5240030620	10kΩ
R516, R517	5240031420	22kΩ
R518~R524	5240030620	10kΩ
R525, R526	5240032420	56kΩ
R527	5240033220	120kΩ
R528, R529	5240031420	22kΩ
R530	5240030020	5.6kΩ
R531	5240032420	56kΩ
R532	5240026620	220Ω
R533	5240032820	82kΩ
R534	5240030620	10kΩ
R535	5240028220	1kΩ
R536	5240023820	15Ω
R537~R540	5240033220	120kΩ
R541	5240030620	10kΩ
R542	5240032420	56kΩ
R543~R545	5240030620	10kΩ
R546	5240031420	22kΩ
R547~R556	5240030620	10kΩ
R557	5240029820	4.7kΩ
R558, R559	5240030620	10kΩ
R560	5240029820	4.7kΩ
R561	5240028220	1kΩ
R562	5240033020	100kΩ

REF. NO.	PARTS NO.	DESCRIPTION
R563	5240027420	470Ω
R564, R565	5240030620	10kΩ
R566~R575	5240030020	5.6kΩ
R577	5240028620	1.5kΩ
R578	5240033620	180kΩ
R579	5240034620	470kΩ
R580, R581	5240033020	100kΩ
R582	5240028220	1kΩ
R583	5240033020	100kΩ
R584, R585	5240030620	10kΩ
R586	5240032620	68kΩ
R587~R590	5240030620	10kΩ
R591~R593	5240033020	100kΩ
R594	5240033220	120kΩ
R595, R596	5240030020	5.6kΩ
R597	5240030620	10kΩ
R901~R903	5240033020	100kΩ
R904~R906	5240030620	10kΩ
R907, R908	5240032220	47kΩ
R909~R911	5240028220	1kΩ
R912	5240032420	56kΩ
R913	5240028220	1kΩ
R914	5240032420	56kΩ
R915	5240028220	1kΩ
R916	5240032420	56kΩ
R917	5240028220	1kΩ
R918	5240032420	56kΩ
R919~R926	5240030620	10kΩ
R927	5240035420	1MΩ
R928	5240030620	10kΩ
R929, R930	5240033420	150kΩ
R931~R936	5240030620	10kΩ
R937	5240032420	56kΩ
R938	5240028220	1kΩ

CAPACITORS

C101, C201	5263105410	Polyst	100pF	100V
C102, C202	5171866000	Mylar	0.027μF	100V
C103, C203	5260066550	Elec.	4.7μF	35V
C104, C204	5171862000	Mylar	0.018μF	100V
C105, C205	5172208000	Ceramic	47pF	50V
C106, C206	5260066550	Elec.	4.7μF	35V
C107, C207	5172212000	Ceramic	100pF	50V
C108, C208	5260066550	Elec.	4.7μF	35V
C109, C209	5172208000	Ceramic	47pF	50V
C110, C210	5260066550	Elec.	4.7μF	35V
C111, C211	5172216000	Ceramic	220pF	50V
C112, C212	5260066550	Elec.	4.7μF	35V
C113, C213	5172208000	Ceramic	47pF	50V
C114, C214	5260066550	Elec.	4.7μF	35V
C115, C215	5172212000	Ceramic	100pF	50V
C116, C216	5171876000	Mylar	0.068μF	100V
C117, C217	5170354000	Mylar	0.0012μF	100V
C118, C218	5260066550	Elec.	4.7μF	35V
C119, C219	5170372000	Mylar	0.0068μF	100V
C120, C220	5263107610	Polyst	820pF	100V
C121, C221	5260162150	Elec.	4.7μF	50V
C122, C222	5260162150	Elec.	4.7μF	50V
C123, C223	5260160750	Elec.	1μF	50V
C124, C224	5263105410	Polyst	100pF	100V
C125, C225	5170364000	Mylar	0.0033μF	100V

REF. NO.	PART NO.	DESCRIPTION		
C126, C226	5170374000	Mylar	0.0082μF	100V
C127, C227	5263107410	Polyst	680pF	100V
C128, C228	5172208000	Ceramic	47pF	50V
C129, C229	5260066550	Elec.	4.7μF	35V
C130, C230	5170360000	Mylar	0.0022μF	100V
C131, C231	5263107400	Polyst	680pF	100V
C132, C232	5260166852	Elec.	220μF	10V
C133, C233	5263106210	Polyst	220pF	100V
C501	5260164252	Elec.	33μF	16V
C502	5260162550	Elec.	10μF	16V
C503, C504	5172236000	Ceramic	0.01μF	50V
C505~C507	5260162550	Elec.	10μF	16V
C508	5173435000	Ceramic	0.047μF	50V
C509, C510	5172236000	Ceramic	0.01μF	50V
C511	5263106610	Polyst	330pF	100V
C512	5172208000	Ceramic	47pF	50V
C513	5260162150	Elec.	4.7μF	50V
C514	5260160750	Elec.	1μF	50V
C515	5172236000	Ceramic	0.01μF	50V
C516	5170360000	Mylar	0.0022μF	100V
C517	5263162223	Metalized	0.1μF	50V
C518	5170368000	Mylar	0.0047μF	100V
C519	5172236000	Ceramic	0.01μF	50V
C520	5263162223	Metalized	0.1μF	50V
C521	5260162550	Elec.	10μF	16V
C522	5260160550	Elec.	0.47μF	50V
C523	5263162623	Metalized	0.22μF	50V
C524	5260065650	Elec.	1μF	50V
C525	5260161150	Elec.	2.2μF	50V
C526	5260162150	Elec.	4.7μF	50V
C527	5171856000	Mylar	0.01μF	100V
C528	5172236000	Ceramic	0.01μF	50V
C529, C530	5173435000	Ceramic	0.047μF	50V
C531, C532	5172236000	Ceramic	0.01μF	50V
C533	5260160750	Elec.	1μF	50V
C534	5263100710	Polyst	0.0012μF	100V
C535~C538	5173435000	Ceramic	0.047μF	50V
C539, C540	5172236000	Ceramic	0.01μF	50V
C541, C542	5173435000	Ceramic	0.047μF	50V
C543	5172236000	Ceramic	0.01μF	50V
C544	5172212000	Ceramic	100pF	50V
C545	5263162223	Metalized	0.1μF	50V
C901	5263162623	Metalized	0.22μF	50V
C902~C905	5172236000	Ceramic	0.01μF	50V
C906, C907	5263106210	Polyst	220pF	100V
C908	5173435000	Ceramic	0.047μF	50V
C909	5260165952	Elec.	100μF	10V
C910	5260162550	Elec.	10μF	16V
C911	5173435000	Ceramic	0.047μF	50V
C912, C913	5260160750	Elec.	1μF	50V
C914	5172236000	Ceramic	0.01μF	50V
C915	5171866000	Mylar	0.027μF	100V
C916	5173435000	Ceramic	0.047μF	50V
C917	5172236000	Ceramic	0.01μF	50V
C918~C921	5173435000	Ceramic	0.047μF	50V

REF. NO.	PARTS NO.	DESCRIPTION	
	VARIABLE RESISTORS		
R10, R20	5280026803	Semi-fixed	100kΩ(B)
R11, R21	5280026803	Semi-fixed	100kΩ(B)
R12, R22	5280026603	Semi-fixed	47kΩ(B)
R13, R23	5280026003	Semi-fixed	47kΩ(B)
R14, R24	5280026603	Semi-fixed	47kΩ(B)
R15, R25	5280026003	Semi-fixed	4.7kΩ(B)
R16, R26	5280026003	Semi-fixed	4.7kΩ(B)
R17, R27	5280026003	Semi-fixed	4.7kΩ(B)
R18, R28	5280026003	Semi-fixed	4.7kΩ(B)
R19, R29	5280026003	Semi-fixed	4.7kΩ(B)
R30, R40	5280026003	Semi-fixed	4.7kΩ(B)
R31, R41	5280026203	Semi-fixed	10kΩ(B)
R32, R42	5280026803	Semi-fixed	100kΩ(B)
R50	5053923000	Semi-fixed	10kΩ(B)
R51	5053917000	Semi-fixed	1kΩ(B)
R52	5053929000	Semi-fixed	100kΩ(B)
R53	5053923000	Semi-fixed	10kΩ(B)
R220	5280026403	Semi-fixed	22kΩ(B)
	CONNECTOR PLUGS		
P501	5122130000	6P	
P503~P506	5122130000	6P	
P507	5122126000	2P	
P508	5122128000	4P	
P509	5122127000	3P	
P510	5122126000	2P	
P511	5122128000	4P	
P512	5122131000	7P	
P513	5122130000	6P	
P514	5122134000	10P	
P515	5122131000	7P	
P516	5122130000	6P	
P517	5122127000	3P	
P518	5122130000	6P	
P519	5122131000	7P	
P520~P522	5122130000	6P	
P523	5122128000	4P	
P524	5122127000	3P	
P525	5122128000	4P	
P901	5122132000	8P	
P902	5122131000	7P	
P903	5122129000	5P	
P904	5122134000	10P	
P905	5122132000	8P	
P906	5122128000	4P	
	MISCELLANEOUS		
L102, L202	5286008700	Coil, Choke	8.2mH
L103, L203	5286001000	Coil, Choke	3.1mH
L104, L204	5286006700	Coil, Choke	1.2mH
L501	5286006700	Coil, Choke	1.2mH
L901	5286002100	Coil, Choke	1.5mH
CR1	5347002400	Ceramic OSC	KBR-480 B

CONTROL PCB ASSY

REF. NO.	PARTS NO.	DESCRIPTION
	5200107203	PCB Assy [All except U, C]
	5200107213	PCB Assy [U, C]
	5210107202	PCB [All except U, C]
	5210107302	PCB [U, C]
	IC's	
U101, U201	5220410900	TA75558P
U102, U202	5220414501	μPC1252H2
U103, U203	5220414601	μPC1253H2
U104, U204	5220410900	TA75558P
U105, U205	5220414501	μPC1252H2
U106, U206	5220414601	μPC1253H2
U107, U207	5220410900	TA75558P
U108, U208	5220410900	TA75558P
U109, U209	5220417400	NE652N
U110, U210	5292802600	Low Pass Filter
U111, U211	5220410900	TA75558P
U112, U212	5220417400	NE652N
U113, U213	5286000200	Coil, Trap
U501	5220019700	LC7800
U502	5220020500	LB1475
U503	5220804100	MB8841M-G-1110M
U504	5220418500	M54545L
U505, U506	5232250500	M54560P
U511	5220416400	M5230L
U512	5220418300	M5231L
U513	5220019000	TC4001BP
U514	5220020000	TC4049BP
U701	5220412500	NJM4562DD
U702	5220013400	TC4066BP
U821	6048948000	MC14538B
	TRANSISTORS	
Q101, Q201	5230778300	2SC2320F
Q102, Q202	5230778300	2SC2320F
Q103, Q203	5145091000	2SC945AK
Q104, Q204	5145091000	2SC945AK
Q105, Q205	5145091000	2SC945AK
Q106, Q206	5145091000	2SC945AK
Q107, Q207	5145091000	2SC945AK
Q108, Q208	5145091000	2SC945AK
Q109, Q209	5145091000	2SC945AK
Q110, Q210	5145091000	2SC945AK
Q111, Q211	5145091000	2SC944AK
Q112, Q212	5145091000	2SC945AK
Q113, Q213	5145091000	2SC945AK
Q114, Q214	5145091000	2SC945AK
Q501	5145091000	2SC945AK
Q502, Q503	5230777700	2SC2120Y
Q504, Q505	5230016100	2SA950Y
Q506, Q507	5042553000	2SA733P
Q508, Q509	5145091000	2SC945AK
Q510	5145087000	2SD313E
Q511	5042553000	2SA733P
Q512, Q513	5145091000	2SC945AK
Q514	5042553000	2SA733P
Q515, Q516	5145091000	2SC945AK
Q517	5042553000	2SA733P
Q531	⚠5145188000	2SD313E
Q532	⚠5145192000	2SB507E
Q533	⚠5145044000	2SC1318Q
Q534	⚠5145188000	2SD313E
Q535	5230777700	2SC2120Y

REF. NO.	PARTS NO.	DESCRIPTION
Q536	5145188000	2SD323E
Q537~Q539	5145091000	2SC945AK
Q540	5042553000	2SA733P
Q541	5230016100	2SA950Y
Q542, Q543	5145091000	2SC945AK
Q544, Q545	5042553000	2SA733P
Q546	5145091000	2SC945AK
Q548, Q549	5145091000	2SC945AK
Q701	5145091000	2SC945AK
Q821~Q824	5145091000	2SC945AK
	DIODES	
D501~D503	5224015020	1SS133T77
D505~D507	5224015020	1SS133T77
D508	5224541901	RD8.2EB3, Zener
D509	5224539701	RD4.3EB2, Zener
D510, D511	5224015020	1SS133T77
D514	5143118000	1S2473HJ
D531, D532	⚠5228008700	ZW02
D533~D535	⚠5224013210	DS135D
D536	⚠5228005000	W02
D537~D540	⚠5224013210	DS135D
D541	5224546201	RD30EB2, Zener
D542~D544	5224013210	DS135D
D545	5224015020	1SS133T77
D546	5224543801	RD15EB3, Zener
D547~D550	5224015020	1SS133T77
D552	5224539701	RD4.3EB2, Zener
D553~D560	5224015020	1SS133T77
D901	5224015020	1SS133T77

CARBON RESISTORS

All resistors are rated ±5% tolerance ¼W.

R101, R201	5240031920	36kΩ
R102, R202	5240033220	120kΩ
R103, R203	5240031820	33kΩ
R104, R204	5240030620	10kΩ
R105, R205	5240029620	3.9kΩ
R106, R206	5240030620	10kΩ
R107, R207	5240025020	47Ω
R108, R208	5240033020	100kΩ
R109, R209	5240033020	100kΩ
R110, R210	5240030620	10kΩ
R111, R211	5240031820	33kΩ
R112, R212	5240025820	100Ω
R113, R213	5240032920	91kΩ
R114, R214	5240029820	4.7kΩ
R115, R215	5240031820	33kΩ
R116, R216	5240031820	33kΩ
R117, R217	5240030220	6.8kΩ
R118, R218	5240029820	4.7kΩ
R119, R219	5240031420	22kΩ
R120, R220	5240029420	3.3kΩ
R121, R221	5240031820	33kΩ
R122, R222	5240033420	150kΩ
R123, R223	5240032020	39kΩ
R124, R224	5240177800	10MΩ
R125, R225	5240177800	10MΩ
R126, R226	5240028220	1kΩ
R127, R227	5240024220	22Ω
R128, R228	5240035320	910kΩ
R129, R229	5240035220	820kΩ
R130, R230	5240023420	10Ω

REF. NO.	PARTS NO.	DESCRIPTION
R131, R231	5240033220	120kΩ
R132, R232	5240031820	33kΩ
R133, R233	5240030620	10kΩ
R134, R234	5240029620	3.9kΩ
R135, R235	5240030620	10kΩ
R136, R236	5240025020	47Ω
R137, R237	5240033020	100kΩ
R138, R238	5240033020	100kΩ
R139, R239	5240030620	10kΩ
R140, R240	5240031820	33kΩ
R141, R241	5240025820	100Ω
R142, R242	5240032920	91kΩ
R143, R243	5240029820	4.7kΩ
R144, R244	5240031820	33kΩ
R145, R245	5240031820	33kΩ
R146, R246	5240030220	6.8kΩ
R147, R247	5240029820	4.7kΩ
R148, R248	5240031420	22kΩ
R149, R249	5240029420	3.3kΩ
R150, R250	5240031820	33kΩ
R151, R251	5240033420	150kΩ
R152, R252	5240032020	39kΩ
R153, R253	5240177800	10MΩ
R154, R254	5240177800	10MΩ
R155, R255	5240028220	1kΩ
R156, R256	5240024220	22Ω
R157, R257	5240035320	910kΩ
R158, R258	5240035220	820kΩ
R159, R259	5240023400	10Ω
R160, R260	5240029120	2.4kΩ
R161, R261	5240033020	100kΩ
R162, R262	5240029420	3.3kΩ
R163, R263	5240030020	5.6kΩ
R164, R264	5240028220	1kΩ
R165, R265	5240032620	68kΩ
R166, R266	5240029020	2.2kΩ
R167, R267	5240029920	5.1kΩ
R168, R268	5240029820	4.7kΩ
R169, R269	5240030820	12kΩ
R170, R270	5240032220	47kΩ
R171, R271	5240032720	75kΩ
R172, R272	5240032220	47kΩ
R173, R273	5240034220	330kΩ
R174, R274	5240034420	390kΩ
R175, R275	5240034420	390kΩ
R176, R276	5240034220	330kΩ
R177, R277	5240032820	82kΩ
R178, R278	5240032220	47kΩ
R179, R279	5240032220	47kΩ
R180, R280	5240028220	1kΩ
R181, R281	5240030020	5.6kΩ
R182, R282	5240032620	68kΩ
R183, R283	5240029920	5.1kΩ
R184, R284	5240029020	2.2kΩ
R185, R285	5240029820	4.7kΩ
R186, R286	5240030820	12kΩ
R187, R287	5240032220	47kΩ
R188, R288	5240032720	75kΩ
R189, R289	5240029820	4.7kΩ
R190, R290	5240030820	12kΩ

REF. NO.	PARTS NO.	DESCRIPTION	
R191, R291	5240034220	330kΩ	
R192, R292	5240034420	390kΩ	
R193, R293	5240034420	390kΩ	
R194, R294	5240034220	330kΩ	
R195, R295	5240032820	82kΩ	
R196, R296	5240030420	8.2kΩ	
R197, R297	5240028620	1.5kΩ	
R301, R401	5240030020	5.6kΩ	
R302, R402	5240030020	5.6kΩ	
R303, R403	5240030020	5.6kΩ	
R304, R404	5240030020	5.6kΩ	
R305, R405	5240030020	5.6kΩ	
R306, R406	5240030020	5.6kΩ	
R307, R407	5240030020	5.6kΩ	
R308, R408	5240030020	5.6kΩ	
R309, R409	5240030020	5.6kΩ	
R310, R410	5240030020	5.6kΩ	
R311, R411	5240030020	5.6kΩ	
R312, R412	5240030020	5.6kΩ	
R511	5240029120	2.4kΩ	
R512～R516	5240030620	10kΩ	
R517	5240033420	150kΩ	
R519～R522	5240028220	1kΩ	
R523	5240027020	330Ω	
R524, R525	5240030620	10kΩ	
R526, R527	5240029820	4.7kΩ	
R528	5240030620	10kΩ	
R529	5240069820	4.7kΩ	
R530～R532	5240030620	10kΩ	
R533	5181416000	1.8kΩ	
R534, R535	5240027820	680Ω	
R536	5240030020	5.6kΩ	
R537	5240029220	2.7kΩ	
R538	5240031820	33kΩ	
R539	5181474000	470Ω	
R540	5240030620	10kΩ	
R541	5240029820	4.7kΩ	
R542	5240030620	10kΩ	
R543	5240033020	100kΩ	
R544	5240030620	10kΩ	
R545	5240027620	560Ω	
R546	5240031420	22kΩ	
R551, R552	⚠5240027620	560Ω	
R553, R554	5240071020	15kΩ	
R555	5240031020	15kΩ	
R556	5240029420	3.3kΩ	
R557	5240027620	560Ω	
R558, R559	5240028220	1kΩ	
R560	5240027620	560Ω	
R561, R562	5240028220	1kΩ	
R563	5240032020	39kΩ	
R564	5240029420	3.3kΩ	
R565	5240028220	1kΩ	
R566	5240029420	3.3kΩ	
R567, R568	⚠5183554000	10kΩ	Nonflammable
R569	5240027220	390Ω	
R570	5240028220	1kΩ	
R571	5240030620	10kΩ	
R572	5240030020	5.6kΩ	
R573, R574	5240029820	4.7kΩ	
R575	5240030620	10kΩ	

REF. NO.	PARTS NO.	DESCRIPTION
R576, R577	5240029820	4.7kΩ
R578	5240028220	1kΩ
R579	5240030020	5.6kΩ
R580	5240025820	100Ω
R581	5240028220	1kΩ
R582	5240030020	5.6kΩ
R583, R584	5240031220	18kΩ
R585	5240028220	1kΩ
R586	5240031420	22kΩ
R587, R588	5240030620	10kΩ
R589~R591	5240029820	4.7kΩ
R592	5240028820	1.8kΩ
R593	5240032020	39kΩ
R594	5240027420	470Ω
R595	5240030620	10kΩ
R596	5240029820	4.7kΩ
R597	5240033020	100kΩ
R598	5240025820	100Ω
R599	5240031020	15kΩ
R600	5240033020	100kΩ
R601	5240034620	470kΩ
R602	5240029820	4.7kΩ
R603	5240033020	100kΩ
R604	5240032220	47kΩ
R605	5240027420	470Ω
R606, R607	5240030620	10kΩ
R608, R609	5240033020	100kΩ
R610	5240029820	4.7kΩ
R611, R612	5181454000	68Ω
R613	5240030620	10kΩ
R614	5240029020	2.2kΩ
R616	5240033020	100kΩ
R619	5240033020	100kΩ
R620	5240030820	12kΩ
R701	5240033020	100kΩ
R702	5240030620	10kΩ
R703	5240025820	100Ω
R704	5240028420	1.2kΩ
R705	5240033220	120kΩ
R706	5240030620	10kΩ
R707	5240028220	1kΩ
R708	5240032020	39kΩ
R709, R710	5240026620	220Ω
R711~R713	5240030620	10kΩ
R801	5240033020	100kΩ
R802	5240030620	10kΩ
R803	5240025820	100Ω
R804	5240028420	1.2kΩ
R805	5240033220	120kΩ
R806	5240030620	10kΩ
R807	5240028220	1kΩ
R808	5240032020	39kΩ
R821	5240033020	100kΩ
R822	5240026820	270Ω
R823	5181534000	150kΩ
R824, R825	5240030620	10kΩ
R826	5240030820	12kΩ
R827	5240033020	100kΩ
R828	5240026820	270Ω
R829~R831	5240030620	10kΩ

REF. NO.	PARTS NO.	DESCRIPTION
R832	5240025820	100Ω
R833	5240028220	1kΩ
R834	5240030620	10kΩ
R901	5240031820	33kΩ
R902	5240033020	100kΩ
R903	5240028220	1kΩ
R904	5240033020	100kΩ
R905	5240028220	1kΩ
R906	5240027420	470Ω
R907	5240033020	100kΩ

CAPACITORS

C101, C201	5263162223	Metalized	0.1μF	50V
C102, C202	5263162223	Metalized	0.1μF	50V
C103, C203	5263163523	Metalized	0.3μF	50V
C104, C204	5171856000	Mylar	0.01μF	100V
C105, C205	5263105410	Polist	100pF	50V
C106, C206	5263105410	Polist	100pF	50V
C107, C207	5260066550	Elec.	4.7μF	35V
C108, C208	5263162223	Metalized	0.1μF	50V
C109, C209	5263162223	Metalized	0.1μF	50V
C110, C210	5170364000	Mylar	0.0033μF	100V
C111, C211	5170364000	Mylar	0.0033μF	100V
C112, C212	5263166610	Polyst	330pF	100V
C113, C213	5263162223	Metalized	0.1μF	50V
C114, C214	5171856000	Mylar	0.01μF	100V
C115, C215	5260160750	Elec.	1μF	50V
C116, C216	5260227010	Elec.	10μF	35V
C117, C217	5260162550	Elec.	10μF	16V
C118, C119	5260162550	Elec.	10μF	16V
C120, C220	5260066550	Elec.	4.7μF	35V
C121, C221	5263163523	Metalized	0.3μF	50V
C122, C222	5263106110	Polyst	200pF	50V
C123, C223	5171856000	Mylar	0.01μF	100V
C124, C224	5263105410	Polyst	100pF	50V
C125, C225	5260066550	Elec.	4.7μF	35V
C126, C226	5263162223	Metalized	0.1μF	50V
C127, C227	5263162223	Metalized	0.1μF	50V
C128, C228	5170364000	Mylar	0.0033μF	100V
C129, C229	5170364000	Mylar	0.0033μF	100V
C130, C230	5263106610	Polyst	330pF	100V
C131, C231	4263162223	Metalized	0.1μF	50V
C132, C232	5171856000	Mylar	0.01μF	100V
C133, C233	5260160750	Elec.	1μF	50V
C134, C234	5260227010	Elec.	10μF	35V
C135, C235	5260162550	Elec.	10μF	16V
C136, C236	5260066550	Elec.	4.7μF	35V
C137, C237	5263101110	Polyst	0.0018μF	100V
C138, C238	5263100710	Polyst	0.0012μF	100V
C139, C239	5170358000	Mylar	0.0018μF	100V
C140, C240	5171856000	Mylar	0.01μF	100V
C141, C241	5260162550	Elec.	10μF	16V
C142, C242	5171868000	Mylar	0.033μF	100V
C143, C243	5170368000	Mylar	0.0047μF	100V
C144, C244	5170368000	Mylar	0.0047μF	100V
C145, C245	5172236000	Ceramic	0.01μF	50V
C146, C246	5260162550	Elec.	10μF	16V
C147, C247	5260066550	Elec.	4.7μF	35V
C148, C248	5263162623	Metalized	0.22μF	50V
C149, C249	5171868000	Mylar	0.033μF	100V
C150, C250	5263162223	Metalized	0.1μF	50V
C151, C251	5172236000	Ceramic	0.1μF	50V

REF. NO.	PARTS NO.	DESCRIPTION		
C152, C252	5263162223	Metalized	0.1μF	50V
C153, C253	5263162423	Metalized	0.15μF	50V
C154, C254	5171868000	Mylar	0.033μF	100V
C155, C255	5171876000	Mylar	0.068μF	100V
C156, C256	5171872000	Mylar	0.047μF	100V
C157, C158	5260162550	Elec.	10μF	16V
C159, C259	5260066550	Elec.	4.7μF	35V
C160, C260	5260066550	Elec.	4.7μF	35V
C161, C261	5170358000	Mylar	0.0018μF	100V
C162, C262	5171856000	Mylar	0.01μF	100V
C163, C263	5260162550	Elec.	10μF	16V
C164, C264	5171868000	Mylar	0.033μF	50V
C165, C265	5170368000	Mylar	0.0047μF	100V
C166, C266	5170368000	Mylar	0.0047μF	100V
C167, C267	5172236000	Ceramic	0.01μF	50V
C168, C268	5260162550	Elec.	10μF	16V
C169, C269	5263162623	Metalized	0.22μF	50V
C170, C270	5171868000	Mylar	0.033μF	100V
C171, C271	5263162223	Metalized	0.1μF	50V
C172, C272	5172236000	Ceramic	0.01μF	50V
C173, C273	5263162223	Meralized	0.1μF	50V
C174, C274	5263162423	Metalized	0.15μF	50V
C175, C275	5171868000	Mylar	0.033μF	100V
C176, C276	5171876000	Mylar	0.068μF	100V
C178, C278	5171872000	Mylar	0.047μF	100V
C179, C279	5172212000	Ceramic	100pF	50V
C501, C502	5172306000	Ceramic	33pF	50V
C503	5260162550	Elec.	10μF	16V
C504	5173435000	Ceramic	0.047μF	50V
C505	5172236000	Ceramic	0.01μF	50V
C506	5173435000	Ceramic	0.047μF	50V
C507	5171864000	Mylar	0.022μF	100V
C508	5173435000	Ceramic	0.047μF	50V
C531, C532	⚠5173082000	Elec.	1000μF	25V
C533, C534	5260165252	Elec.	47μF	25V
C535, C356	5260162150	Elec.	4.7μF	50V
C537	5260163452	Elec.	22μF	25V
C538~C543	5260162550	Elec.	10μF	16V
C544	⚠5173084000	Elec.	1000μF	50V
C545	5260165452	Elec.	47μF	50V
C546	5260162750	Elec.	10μF	35V
C547	5172212000	Ceramic	100pF	50V
C548, C549	5260165452	Elec.	47μF	50V
C550~C552	5260162750	Elec.	10μF	35V
C553~C555	⚠5262001110	Elec.	4700μF	25V
C556	⚠5173089000	Elec.	2200μF	25V
C559	5173054800	Elec.	220μF	16V
C560	5172236000	Ceramic	0.01μF	50V
C561	5173054800	Elec.	220μF	16V
C562	5173435000	Ceramic	0.047μF	50V
C563	5173072000	Elec.	470μF	16V
C564	5260162550	Elec.	10μF	16V
C565	5260163452	Elec.	22μF	25V
C566	5173072000	Elec.	470μF	16V
C567	⚠5173097000	Elec.	4700μF	16V
C568	5173054800	Elec.	220μF	16V
C569, C570	5173435000	Ceramic	0.047μF	50V
C571	5260162550	Elec.	10μF	16V
C572	5173435000	Ceramic	0.047μF	50V
C573	5173095000	Elec.	4700μF	6.3V
C574	5173435000	Ceramic	0.047μF	50V

REF. NO.	PARTS NO.	DESCRIPTION		
C575	5263163013	Metalized	0.47μF	50V
C576	5173054800	Elec.	220μF	16V
C577	5260160750	Elec.	1μF	50V
C578, C579	5260162550	Elec.	10μF	16V
C580	5260160750	Elec.	1μF	50V
C581	5263164100	Metalized	0.01μF	250V(E, UK)
C701, C801	5172200000	Ceramic	10pF	50V
C702, C802	5260066550	Elec.	4.7μF	35V
C703, C803	5260066550	Elec.	4.7μF	35V
C704, C705	5260162550	Elec.	10μF	16V
C706, C707	5172236000	Ceramic	0.01μF	50V
C821	5260162550	Elec.	10μF	16V
C822	5173435000	Ceramic	0.047μF	50V
C823	5263162223	Metalized	0.1μF	50V
C824	5172236000	Ceramic	0.01μF	50V
C901	5260162550	Elec.	10μF	16V

VARIABLE RESISTORS

R10, R20	5280026603	Semi-fixed	47kΩ(B)
R11, R21	5280026603	Semi-fixed	47kΩ(B)
R12, R22	5053933000	Semi-fixed	470kΩ(B)
R13, R23	5280026603	Semi-fixed	47kΩ(B)
R14, R24	5280026603	Semi-fixed	47kΩ(B)
R15, R25	5053933000	Semi-fixed	470kΩ(B)
R55	5280026003	Semi-fixed	4.7kΩ(B)
R56	5280026202	Semi-fixed	10kΩ(B)

MISCELLANEOUS

L101, L201	5286010200	Coil, Choke; 36mH
L102, L202	5286010200	Coil, Choke; 36mH
L501	5286002100	Coil, Choke; 1.5mH
D504	5225005400	LED, SLP-135B (RED)
CR1	5347001000	Ceramic OSC, KBR-4.0H
	5553132000	Heat Sink, IC1625T-ST
J1	5122172000	Connector Socket, 10P
J2	5122167000	Connector Socket, 5P
J50	5122166000	Connector Socket, 4P
J502	5122166000	Connector Socket, 4P
J503~J506	5122168000	Connector Socket, 6P
J511	5122166000	Connector Socket, 4P
J514	5122172000	Connector Socket, 10P
J515	5122169000	Connector Socket, 7P
J904	5122172000	Connector Socket, 10P
J906	5122166000	Connector Socket, 4P
CN1	5122169000	Connector Socket, 7P
CN3	5122170000	Connector Socket, 8P
CN5	5122169000	Connector Socket, 7P
	5122240000	Connector Pin
P501	5336129000	Connector Plug, 10P
P502	5336128600	Connector Plug, 6P
P503	5336126300	Connector Plug, 3P
P504	5336128700	Connector Plug, 7P
P505	5221280000	Connector Plug, 4P

SWITCH PCB R ASSY

REF. NO.	PARTS NO.	DESCRIPTION
	5200107401	PCB Assy
	5210107401	PCB
	DIODES	
D1 ~D3	5224012920	1S2473HJ
	CAPACITORS	
C10~C12	5170364000	Mylar 0.0033μF 100V
C20~C22	5170364000	Mylar 0.0033μF 100V
	VARIABLE RESISTORS	
R10, R20	5053346000	Semi-fixed 4.7kΩ(B)
R11, R21	5053348000	Semi-fixed 10kΩ(B)
R12, R22	5053349000	Semi-frxed 100kΩ(B)
R13, R23	5053346000	Semi-fixed 4.7kΩ(B)
R14, R24	5053346000	Semi-fixed 4.7kΩ(B)
R15, R25	5053346000	Semi-fixed 4.7kΩ(B)
R16, R26	5053348000	Semi-fixed 10kΩ(B)
R17, R27	5053348000	Semi-fixed 10kΩ(B)
R18, R28	5053348000	Semi-fixed 10kΩ(B)
	SWITCHES	
S1	5300031800	Push, 3-gang
S2	5300031400	Push
S3, S4	5302102000	Tact, KHH-15910
	MISCELLANEOUS	
J518	5122168000	Connector Socket, 6P
J519	5122169000	Connector Socket, 7P
J520	5122168000	Connector Socket, 6P
J521	5122168000	Connector Socket, 6P
J522	5122168000	Connector Socket, 6P
J524	5122165000	Connector Socket, 3p
	5122240000	Connector Pin

SWITCH PCB L ASSY

REF. NO.	PARTS NO.	DESCRIPTION
	5200106100	PCB Assy
	5210106100	PCB
	CARBON RESISTORS	
	All resistors are rated ±5% tolerance and ¼W.	
R1 ~R7	5181506000	10kΩ
	SWITCHES	
S1 ~S4	5302102000	Tact, KHH-15910
S5	5300031500	Push, 4-gang
S6	5300031600	Push, 3-gang
S7	5300031500	Push, 4-gang
S8	5300031700	Push, 3-gang
	MISCELLANEOUS	
J505	5122166000	Connector Socket, 4P
J512	5122169000	Connector Socket, 7P
J901	5122170000	Connector Socket, 8P
	5122240000	Connector Pin

MECHANISM PCB ASSY

REF. NO.	PARTS NO.	DESCRIPTION
	5200107601	PCB Assy
	5210107602	PCB
	IC	
U1	5220417800	LM556CN
	CARBON RESISTORS	
	All resistors are rated ±5% tolerance and ¼W.	
R1, R2	5181518000	33kΩ
R3, R4	5181482000	1kΩ
R5	5181494000	3.3kΩ
R6	5181496000	3.9kΩ
R7	5181516000	27kΩ
R8	5181522000	47kΩ
R9	5181494000	3.3kΩ
	CAPACITORS	
C1	5260065850	Elec. 2.2μF 50V
C2	5260165952	Elec. 100μF 10V
C3	5263165613	Metalized 0.0012μF 50V
C4	5263161013	Metalized 0.01μF 50V
C5	5263161413	Metalized 0.022μF 50V
C6	5263161013	Metalized 0.01μF 50V
	VARIABLE RESISTORS	
R10	5150152000	Semi-fixed 2kΩ(B)
R11	5150155000	Semi-fixed 20kΩ(B)
	MISCELLANEOUS	
P1	5122134000	Connector Plug, 10P
P2	5122129000	Connector Plug, 5P
L1	5286006700	Coil, Choke; 1.2mH

OPERATION SWITCH PCB ASSY

REF. NO.	PARTS NO.	DESCRIPTION
	5200107500	PCB Assy
	5210107500	PCB
	CARBON RESISTORS	
	All resistors are rated ±5% tolerance and ¼W.	
R1 ~R4	5181454000	68Ω
R5 ~R7	5181470000	330Ω
	CAPACITOR	
C1	5173433000	Ceramic 0.01μF 50V
	LED's	
D1 ~D4	5225011800	SLH34MC3, (Green)
D5 ~D7	5225011700	SLH34VRC3, (Red)
	SWITCHES	
S1 ~S7	5302102000	Switch, Tact; KHH-15910
	MISCELLANEOUS	
J501	5336125000	Connector Socket, 10P
J502	5336124600	Connector Socket, 6P
	5336130100	Connector Pin

EQ PCB ASSY

REF. NO.	PARTS NO.	DESCRIPTION
	5200118700	PCB Assy [All except U, C]
	5200118710	PCB Assy [U, C]
	5210118700	PCB [All except U, C]
	5210118800	PCB [U, C]
	IC	
U1	5220410900	TA75558P
	CARBON RESISTORS	
	All resistors are rated ±5% tolerance ¼W.	
R11, R21	5240030020	5.6kΩ
R12, R22	5240030020	5.6kΩ
R13, R23	5240029820	4.7kΩ
R14, R24	5240031420	22kΩ
	CAPACITORS	
C1, C2	5173435000	Ceramic 0.047μF 50V
C10, C20	5170364000	Mylar 0.0033μF 100V
	VARIABEL RESISTORS	
R10, R20	5280026603	Semi-fixed 47kΩ(B)

POWER SWITCH PCB ASSY (PC Board omitted.)

REF. NO.	PART NO.	DESCRIPTION
	5200106900	PCB Assy [J]
	5200106910	PCB Assy [U]
	5200106920	PCB Assy [C]
	5200106930	PCB Assy [GE]
	5200106940	PCB Assy [E, UK, A]
	5210073201	PCB
S401	⚠5300031900	Push Switch, SPLC1P
	SPARK KILLERS	
Z401	⚠5052905000	0.1μF + 120Ω/300V[J]
	5052910000	0.033μF + 120Ω/125V [U]
	⚠5292002600	0.033μF + 120Ω/25V [C]
	⚠5267702500	0.0047μF/250V [E, UK, A]
	⚠5292002500	0.01μF + 120Ω/300V [GE]

VR PCB ASSY

REF. NO.	PARTS NO.	DESCRIPTION
	5200106500	PCB Assy [All except U, C]
	5200106510	PCB Assy [U, C]
	5210106500	PCB [All except U, C]
	5210106600	PCB [U, C]
	VARIABLE RESISTORS	
R10, R20	5282250400	Semi-fixed 50kΩ(A)
R50	5282408900	Semi-fixed 20kΩ(A) x 2
	MISCELLANEOUS	
P50	5122128000	Connector Plug, 4P
J507	5122164000	Connector Socket, 2P
J508	5122166000	Connector Socket, 4P
	5122240000	Connector Pin

FUSE PCB ASSY (PC Board omitted.)

REF. NO.	PARTS NO.	DESCRIPTION
	5200112700	PCB Assy [E, UK]
	5210112700	PCB [E, UK]
F1, F2	⚠5041138000	Fuse, 500mA 250V
F3, F4	⚠5142187000	Fuse, 1.25A 250V
F5	⚠5041140000	Fuse, 1A 250V
	5142087000	Holder, Fuse (10 used)

SENSOR PCB ASSY

REF. NO.	PART NO.	DESCRIPTION
	5200107700	PCB Assy
	5210107700	PCB
Q1, Q2	5228008300	Photo Transistor PH-102K

LED PCB ASSY (PC Board omitted.)

REF. NO.	PARTS NO.	DESCRIPTION
	5200106700	PCB Assy
	5210107700	PCB
	LED's	
D1 ~ D3	5225005900	SLP-151B
J523	5122166000	Connector Socket, 4P
	5122240000	Connector Pin

TIMER PCB ASSY (PC Board omitted.)

REF. NO.	PARTS NO.	DESCRIPTION
	5200106300	PCB Assy [All except U, C]
	5200106310	PCB Assy [U, C]
	5210106300	PCB [All except U, C]
	5210106400	PCB [U, C]
S1	5301204400	Switch, Rotary
J503	5336124300	Connector Socket, 3P
	5336130100	Connector Pin

IN/OUT JACK PCB ASSY (PC Board omitted.)

REF. NO.	PARTS NO.	DESCRIPTION
	5200125710	PCB Assy [U, C]
	5200125800	PCB Assy, [All except U, C]
	5210125800	PCB [U, C]
	5210125700	PCB [All except U, C]
	5330508200	Pin Jack, 4P
P502	5122147000	Connector Plug, 4P

Z-5000

TEAC®

ティアック株式会社

	本社営業部	180・東京都武蔵野市中町3－7－3	電話 武蔵野 (0422) 53-1111代
製品についてのお問合わせ サービスに関するお問合わせ	札幌営業所	064・札幌市中央区南7条西2－2 くぼたビル	電話 札幌 (011)52-4101代
	仙台営業所	980・仙台市1番町2－5－5 中央ビル	電話 仙台 (0222) 2-1501代
	大宮営業所	330・大宮市桜木町4－2 ローズベイ大宮ビル	電話 大宮 (0486) 4-4551代
	東京営業所	100・東京都千代田区永田町2－10－7 星ガ岡会館	電話 東京 (03)591-1831代
	千代田営業所	100・東京都千代田区永田町2－10－7 星ガ岡会館	電話 東京 (03)591-1836代
	千葉出張所	280・千葉市松波1－11－3 石橋松波ビル	電話 千葉 (0472) 5-1281代
	立川営業所	190・東京都立川市栄町4－13－2	電話 立川 (0425) 2-4721代
	横浜営業所	221・横浜市神奈川区沢渡1－1 高島台第一ビル	電話 横浜 (045)311-3270代
	名古屋営業所	464・名古屋市千種区東山通り3－2－3	電話 名古屋 (052)781-4581代
	静岡出張所	420・静岡市中島大割286－1	電話 静岡 (0542) 8-6561代
	大阪営業所	564・大阪府吹田市垂水町3－34－10	電話 大阪 (06)381-5201代
	京都出張所	600・京都市下京区大宮通四条下ル四条大宮町21番地 三虎ビル	電話 京都 (075)841-0751代
	神戸出張所	650・神戸市中央区山本通り3－1－3 谷口マンション内	電話 神戸 (078)241-2458代
	岡山出張所	700・岡山市十日市中町1番40号	電話 岡山 (0862) 2-8601代
	広島営業所	733・広島市中区中島町10－24	電話 広島 (082)241-3581代
	福岡営業所	812・福岡市博多区博多駅東2－17－5 モリメンビル	電話 福岡 (092)431-5781代
サービスに関するお問合わせ	本社サービス1課	180・東京都武蔵野市中町3－7－3	電話 武蔵野 (0422) 53-3242代
	沖縄サービスセンター	901-22・沖縄県宜野湾市字喜友名229	電話 沖縄 (09889) 8-2020代
技術的なお問合わせ	テープデッキ相談室	180・東京都武蔵野市中町3－7－3	電話 武蔵野 (0422) 53-3192代

TEAC CORPORATION 3-7-3 NAKA-CHO MUSASHINO TOKYO PHONE (0422) 53-1111

TEAC CORPORATION OF AMERICA 7733 TELEGRAPH ROAD MONTEBELLO CALIFORNIA 90640 PHONE (213) 721-0303

TEAC AUSTRALIA PTY., LTD. 115 WHITEMAN STREET SOUTH MELBOURNE VICTORIA 3205 PHONE 699-6000

PRINTED IN JAPAN 0583 AO・2.0 D43 66A

TEAC TECHNICAL INFORMATION

NO. 8317
DATE 29 July 1983

Z-5000, Wow and Flutter

In order to reduce wow and flutter, several changes have been made on the parts of transport deck as shown in the table hereunder. Point of changes are honing on the capstan top, bend on spring end, and material change on pulley rubber.
Changes take place on the products serial numbered 100025 and after.

Description	Former	Number of New	Location of Parts on Service Manual
Capstan Motor Assy (Shaft)	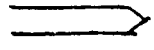 53700023-01	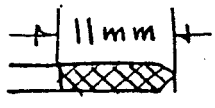 53700023-03	as Item 19 on page 32
Spring, Pinch Roller Arm	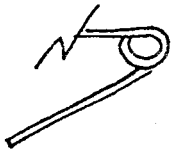 58004618-00	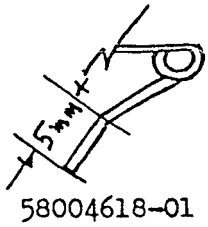 58004618-01	as Item 30 on page 30
Pulley Assy	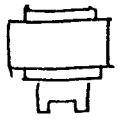 58004303-00	 58004303-01	as Item 7 on page 32

TEAC SCHEMATIC DIAGRAM Z-5000

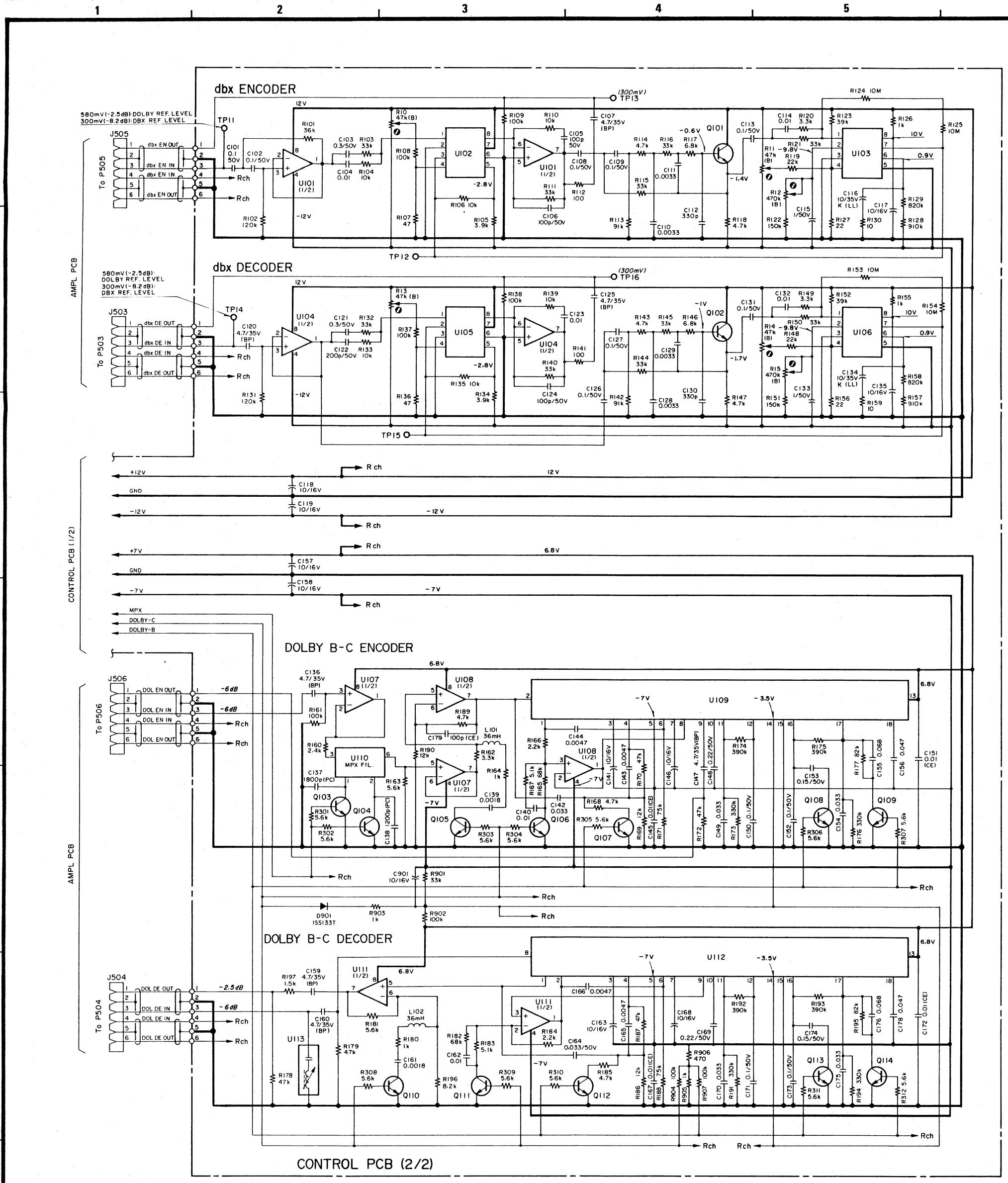

( ) : R ch

dbx NR		DOLBY NR	
U101(U201) TA75558P	Q101(Q201) 2SC2320F	U107(U207) TA75558P	Q103(Q203)
U102(U202) μPC1252H2	Q102(Q202) 2SC2320F	U108(U208) TA75558P	Q104(Q204)
U103(U203) μPC1253H2		U109(U209) NE652	Q105(Q205)
U104(U204) TA75558P		U110(U210) MPX FILTER	Q106(Q206)
U105(U205) μPC1252H2		U111(U211) TA75558P	Q107(Q207)
U106(U206) μPC1253H2		U112(U212) NE652	Q108(Q208)
		U113(U213) BIAS TRAP	Q109(Q209)
			Q110(Q210)
			Q111(Q211)
			Q112(Q212)
			Q113(Q213)
			Q114(Q214)
			2SC945AK

INSTRUCTIONS FOR SERVICE PERSONNEL

BEFORE RETURNING APPLIANCE TO THE CUSTOMER, MAKE LEAKAGE-CURRENT OR RESISTANCE MEASUREMENTS TO DETERMINE THAT EXPOSED PARTS ARE ACCEPTABLY INSULATED FROM THE SUPPLY CIRCUIT.

NOTES

1. Schematic diagram is shown for left channel, unless otherwise noted.
2. Resistor values are in ohms (k=kilo-ohms M=megohms).
3. All capacitor values are in microfarads (p=picofarads).
   All non-polarized capacitors are ±5% Mylar, unless otherwise noted.
4. Voltage and level values are values of actural measurement.
   0 dB=0.775V
5. ——— +B power supply circuit
6. ——— −B power supply circuit

注

1. 回路は一部を
2. 抵抗の単位は
3. コンデンサの
   特に指定のな
4. 電圧及びレベ
   0 dB＝0.7

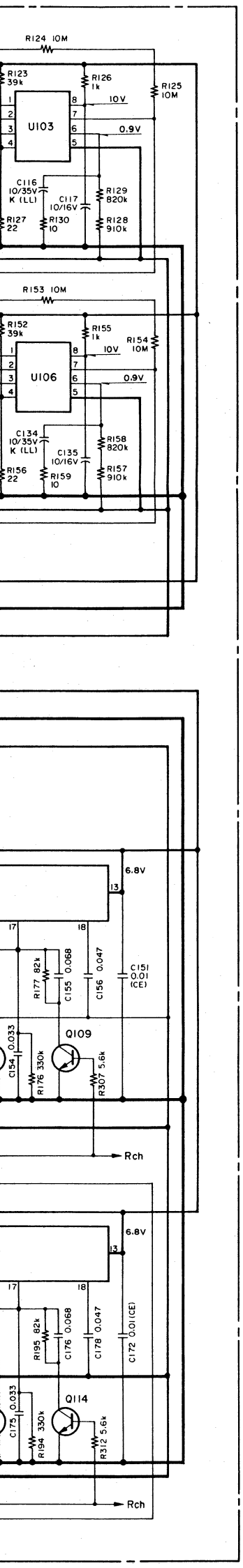

DOLBY NR		
5558P	Q103(Q203)	2SC945AK
5558P	Q104(Q204)	
52	Q105(Q205)	
X FILTER	Q106(Q206)	
5558P	Q107(Q207)	
52	Q108(Q208)	
S TRAP	Q109(Q209)	
	Q110(Q210)	
	Q111(Q211)	
	Q112(Q212)	
	Q113(Q213)	
	Q114(Q214)	

SEMICONDUCTOR ELECTRODES

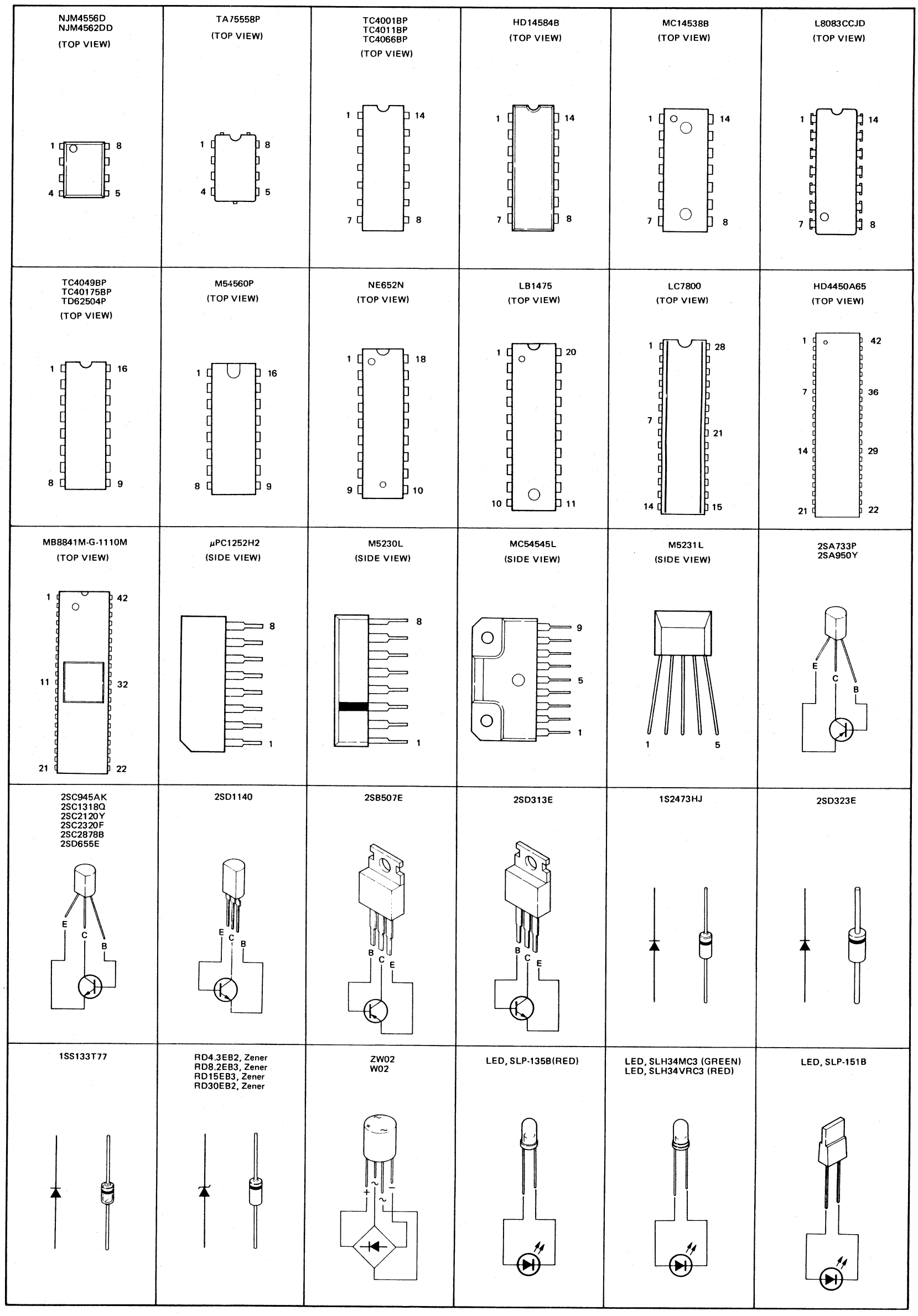

ss otherwise noted.
ohms).
ads).
s otherwise noted.
surement.

注

1. 回路は一部を除きLchのみが示されています.
2. 抵抗の単位はΩ(k=kΩ, M=MΩ)です.
3. コンデンサの単位はμF(p=pF)です.
   特に指定のない無極性コンデンサは, 偏差±5%のマイラコンデンサです.
4. 電圧及びレベルは参考値です.
   0 dB=0.775V
5. ———— : +B電源回路
6. ———— : −B電源回路

Z-5000
Master Cassette Decl

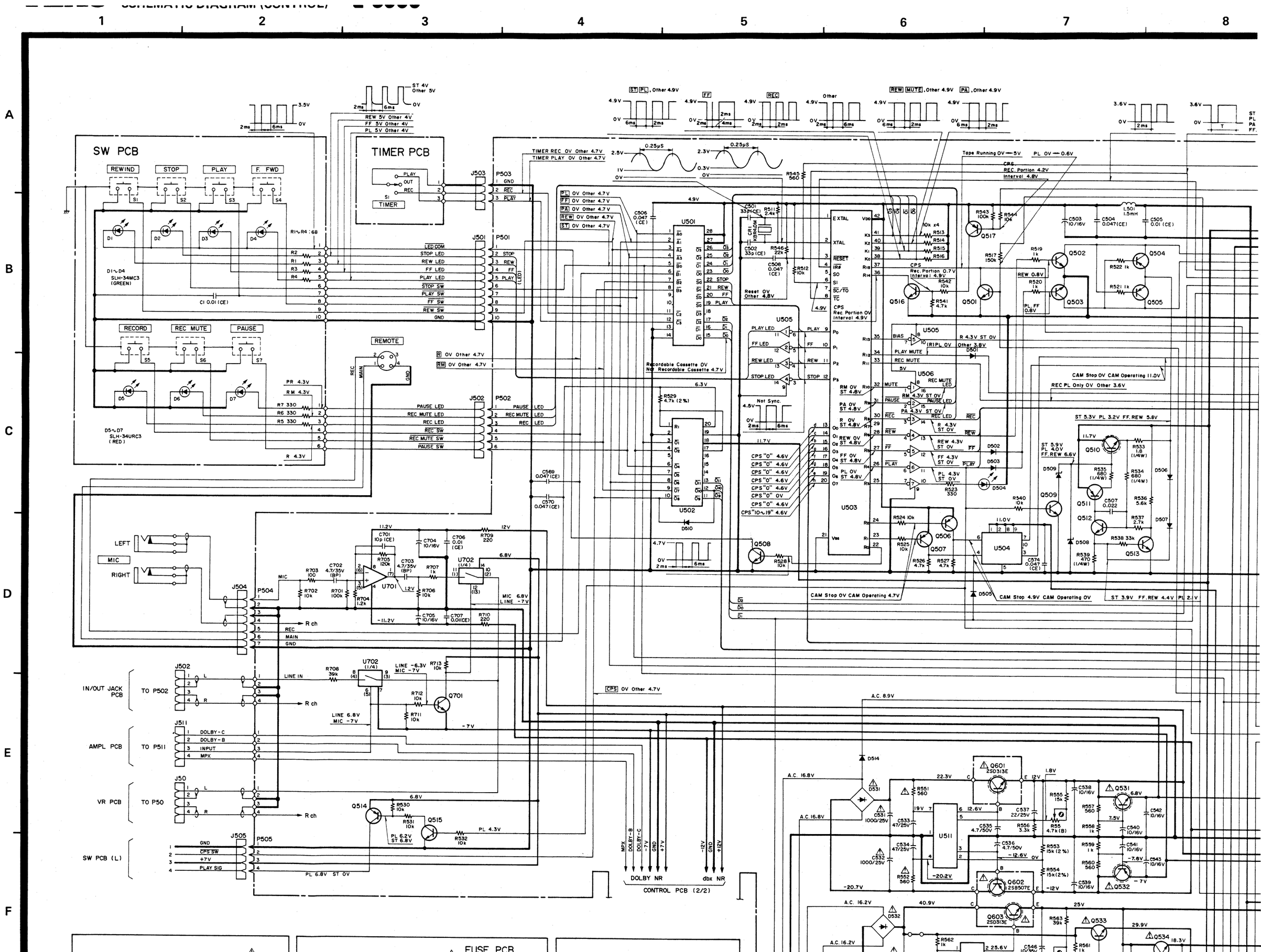
SW PCB
REWIND
STOP
PLAY
F. FWD
RECORD
REC MUTE
PAUSE
D1~D4
SLH-34MC3
(GREEN)
D5~D7
SLH-34URC3
(RED)
TIMER PCB
TIMER
REMOTE
LEFT
MIC
RIGHT
IN/OUT JACK PCB
TO P502
AMPL PCB
TO P511
VR PCB
TO P50
SW PCB (L)
CONTROL PCB (2/2)
DOLBY NR
dbx NR
U501
U502
U503
U504
U505
U506
U511
U701
U702
Q501
Q502
Q503
Q504
Q505
Q506
Q507
Q508
Q509
Q510
Q511
Q512
Q513
Q514
Q515
Q516
Q517
Q601
Q602
Q603
Q531
Q532
Q533
Q534
Q701
L501
1.5mH

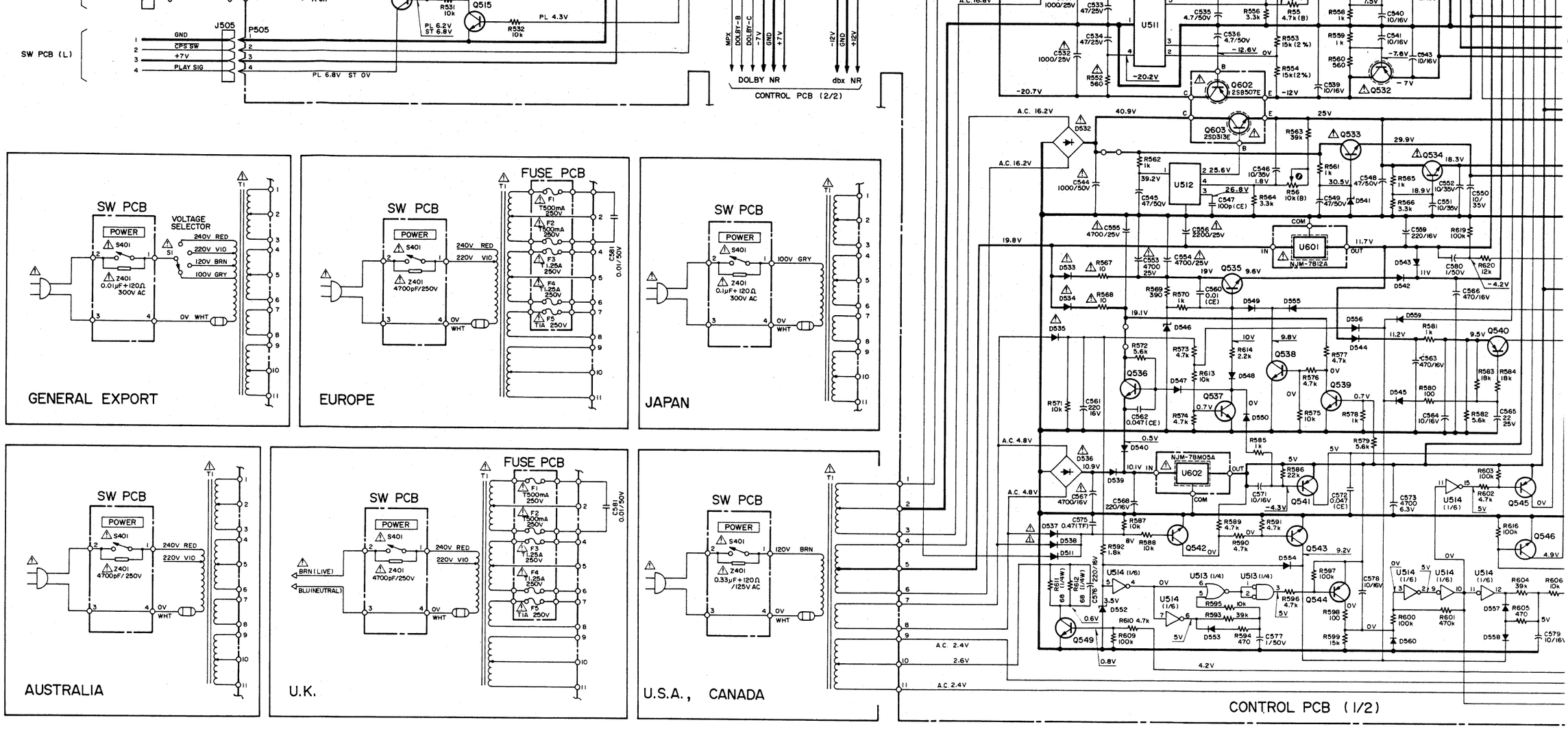

INSTRUCTIONS FOR SERVICE PERSONNEL

BEFORE RETURNING APPLIANCE TO THE CUSTOMER, MAKE LEAKAGE-CURRENT OR RESISTANCE MEASUREMENTS TO DETERMINE THAT EXPOSED PARTS ARE ACCEPTABLY INSULATED FROM THE SUPPLY CIRCUIT.

NOTES

1. Resistor values ar
2. All capacitor valu
   All non-polarized
3. Voltage and level
   0 dB=0.775V
4. ▭ : Front p
5. ——— +B pow
6. ——— −B pow
7. ⚠ Parts marke
   must always be re
   Refer to the appr

1

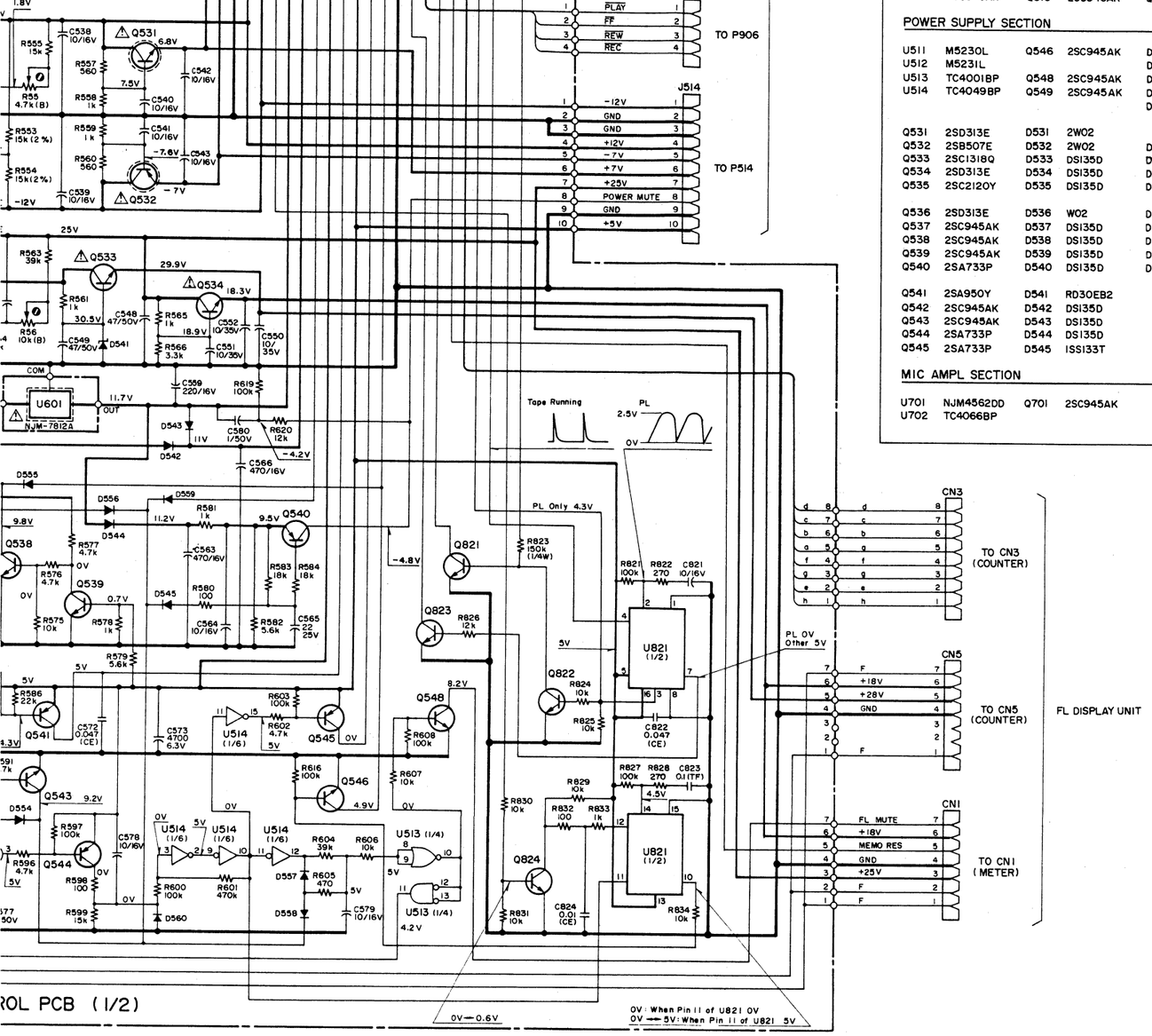

POWER SUPPLY SECTION

U511	M5230L	Q546	2SC945AK	D546	RD15EB3
U512	M5231L			D547	1SS133T
U513	TC4001BP	Q548	2SC945AK	D548	1SS133T
U514	TC4049BP	Q549	2SC945AK	D549	1SS133T
				D550	1SS133T
Q531	2SD313E	D531	2W02		
Q532	2SB507E	D532	2W02	D552	RD4.3EB2
Q533	2SC1318Q	D533	DS135D	D553	1SS133T
Q534	2SD313E	D534	DS135D	D554	1SS133T
Q535	2SC2120Y	D535	DS135D	D555	1SS133T
Q536	2SD313E	D536	W02	D556	1SS133T
Q537	2SC945AK	D537	DS135D	D557	1SS133T
Q538	2SC945AK	D538	DS135D	D558	1SS133T
Q539	2SC945AK	D539	DS135D	D559	1SS133T
Q540	2SA733P	D540	DS135D	D560	1SS133T
Q541	2SA950Y	D541	RD30EB2		
Q542	2SC945AK	D542	DS135D		
Q543	2SC945AK	D543	DS135D		
Q544	2SA733P	D544	DS135D		
Q545	2SA733P	D545	1SS133T		

MIC AMPL SECTION

U701	NJM4562DD	Q701	2SC945AK
U702	TC4066BP		

NOTES

1. Resistor values are in ohms (k=kilo-ohms M=megohms).
2. All capacitor values are in microfarads (p=picofarads).
   All non-polarized capacitors are ±5% Mylar, unless otherwise noted.
3. Voltage and level values are values of actural measurement.
   0 dB=0.775V
4. ▭ : Front panel indication
5. ——— +B power supply circuit
6. ——— −B power supply circuit
7. ⚠ Parts marked with this sign are safety critical components. They must always be replaced with identical components.
   Refer to the appropriate parts list to ensure exact replacement.

注

1. 抵抗の単位はΩ(k=kΩ, M=MΩ)です.
2. コンデンサの単位はμF(p=pF)です.
   特に指定のない無極性コンデンサは, 偏差±5%のマイラコンデンサです.
3. 電圧及びレベルは参考値です.
   0 dB=0.775V
4. ▭ : フロント・パネル上の表示
5. ——— : +B電源回路
6. ——— : −B電源回路
7. ⚠マークのある部品は安全重要部品です.
   交換するときは必ずティアック指定の部品を使用してください.

Z-5000

Master Cassette Deck

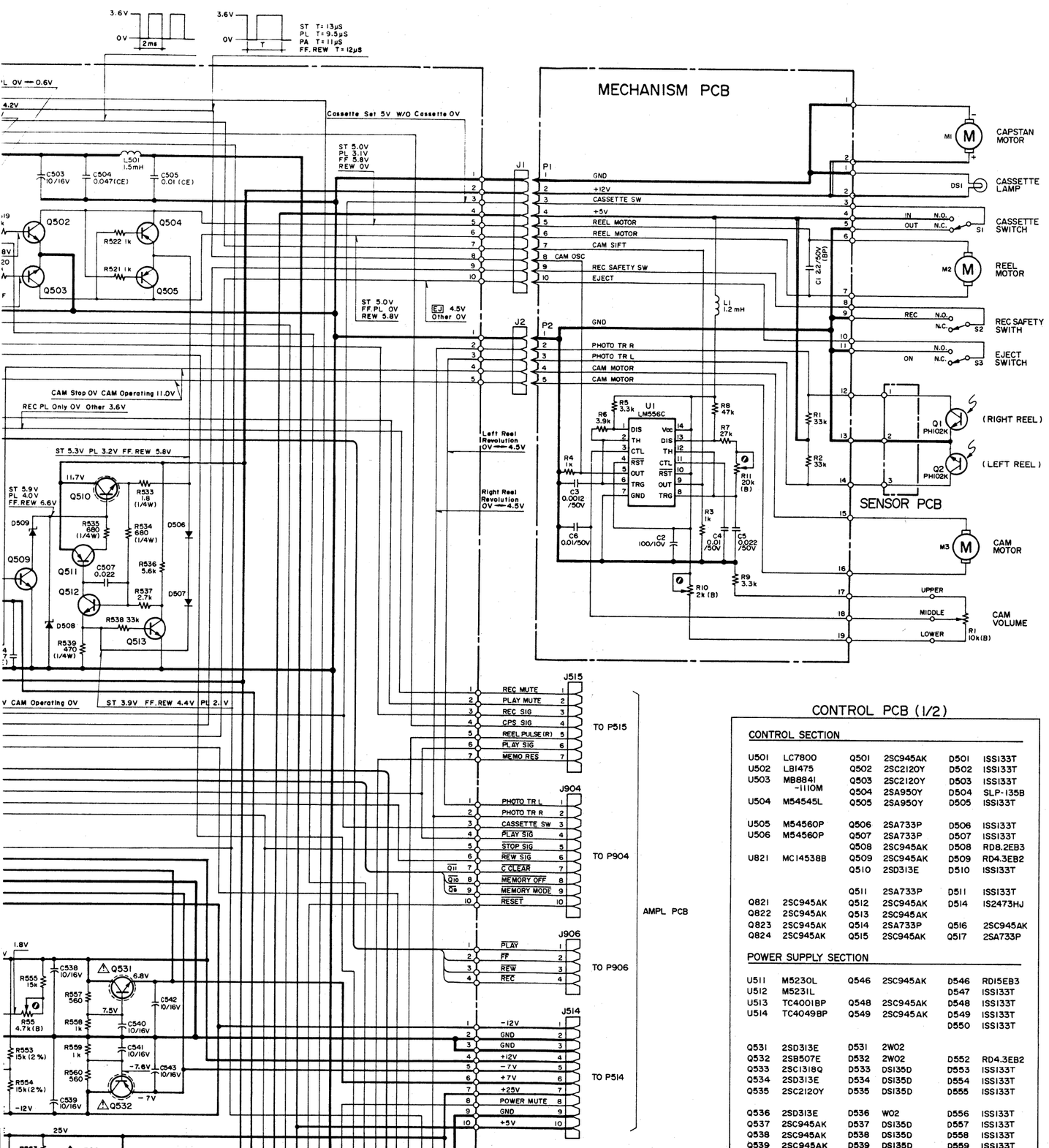

CONTROL PCB (1/2)

CONTROL SECTION

U501	LC7800	Q501	2SC945AK	D501	ISS133T
U502	LB1475	Q502	2SC2120Y	D502	ISS133T
U503	MB8841 -1110M	Q503	2SC2120Y	D503	ISS133T
		Q504	2SA950Y	D504	SLP-135B
U504	M54545L	Q505	2SA950Y	D505	ISS133T
U505	M54560P	Q506	2SA733P	D506	ISS133T
U506	M54560P	Q507	2SA733P	D507	ISS133T
		Q508	2SC945AK	D508	RD8.2EB3
U821	MC14538B	Q509	2SC945AK	D509	RD4.3EB2
		Q510	2SD313E	D510	ISS133T
		Q511	2SA733P	D511	ISS133T
Q821	2SC945AK	Q512	2SC945AK	D514	IS2473HJ
Q822	2SC945AK	Q513	2SC945AK		
Q823	2SC945AK	Q514	2SA733P	Q516	2SC945AK
Q824	2SC945AK	Q515	2SC945AK	Q517	2SA733P

POWER SUPPLY SECTION

U511	M5230L	Q546	2SC945AK	D546	RD15EB3
U512	M5231L			D547	ISS133T
U513	TC4001BP	Q548	2SC945AK	D548	ISS133T
U514	TC4049BP	Q549	2SC945AK	D549	ISS133T
				D550	ISS133T
Q531	2SD313E	D531	2W02		
Q532	2SB507E	D532	2W02	D552	RD4.3EB2
Q533	2SC1318Q	D533	DSI35D	D553	ISS133T
Q534	2SD313E	D534	DSI35D	D554	ISS133T
Q535	2SC2120Y	D535	DSI35D	D555	ISS133T
Q536	2SD313E	D536	W02	D556	ISS133T
Q537	2SC945AK	D537	DSI35D	D557	ISS133T
Q538	2SC945AK	D538	DSI35D	D558	ISS133T
Q539	2SC945AK	D539	DSI35D	D559	ISS133T

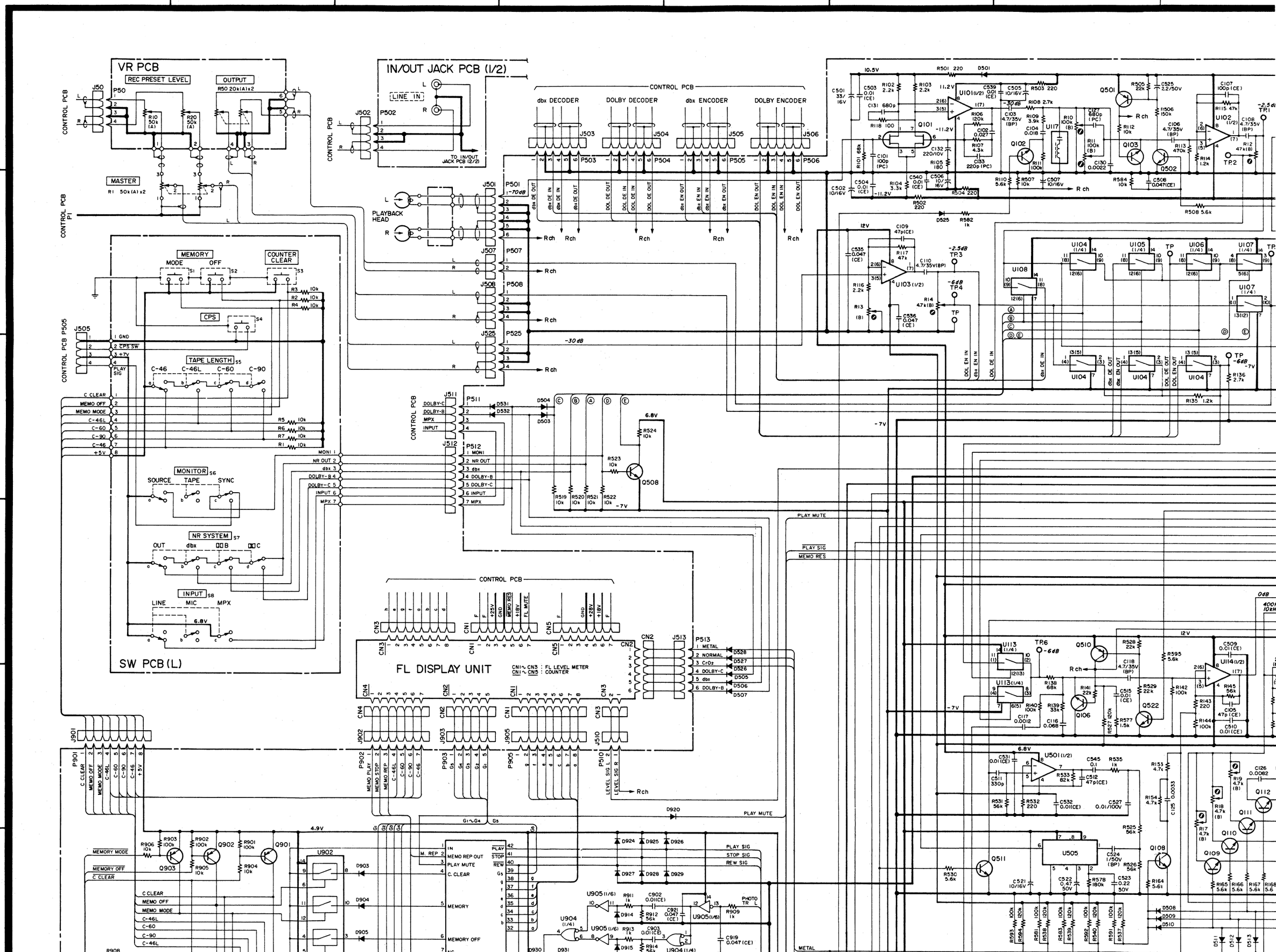
VR PCB
REC PRESET LEVEL
OUTPUT
MASTER
IN/OUT JACK PCB (1/2)
LINE IN
TO IN/OUT JACK PCB (2/2)
CONTROL PCB
dbx DECODER
DOLBY DECODER
dbx ENCODER
DOLBY ENCODER
PLAYBACK HEAD
MEMORY
MODE
OFF
COUNTER CLEAR
CPS
TAPE LENGTH
C-46
C-46L
C-60
C-90
MONITOR
SOURCE
TAPE
SYNC
NR SYSTEM
OUT
dbx
INPUT
LINE
MIC
MPX
SW PCB (L)
FL DISPLAY UNIT
CN1~CN3 : FL LEVEL METER
CN1~CN5 : COUNTER
METAL
NORMAL
CrO2
DOLBY-C
dbx
DOLBY-B
PLAY MUTE
PLAY SIG
MEMO RES
MEMORY MODE
MEMORY OFF
C CLEAR
MEMORY
STOP SIG
REW SIG
PHOTO TR L
Rch

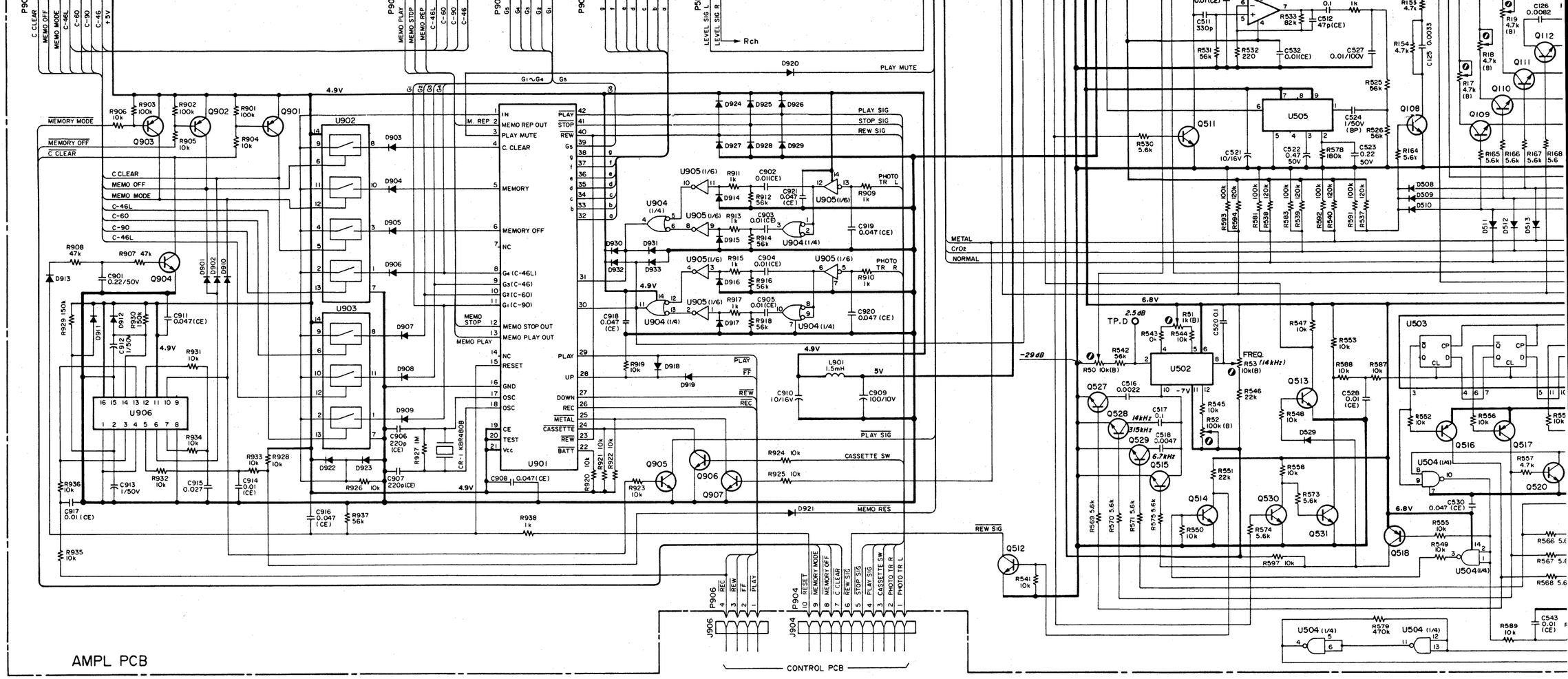

INSTRUCTIONS FOR SERVICE PERSONNEL

BEFORE RETURNING APPLIANCE TO THE CUSTOMER, MAKE LEAKAGE-CURRENT OR RESISTANCE MEASUREMENTS TO DETERMINE THAT EXPOSED PARTS ARE ACCEPTABLY INSULATED FROM THE SUPPLY CIRCUIT.

NOTES

1. Schematic diagr
2. Resistor values a
3. All capacitor val
   All non-polarize
4. Voltage and leve
   0 dB=0.775V
5. ▭ : Front
6. ▭ : Rear p
7. ——— +B po
8. ——— −B po
9. ⚠ Parts mark
   must always be
   Refer to the app

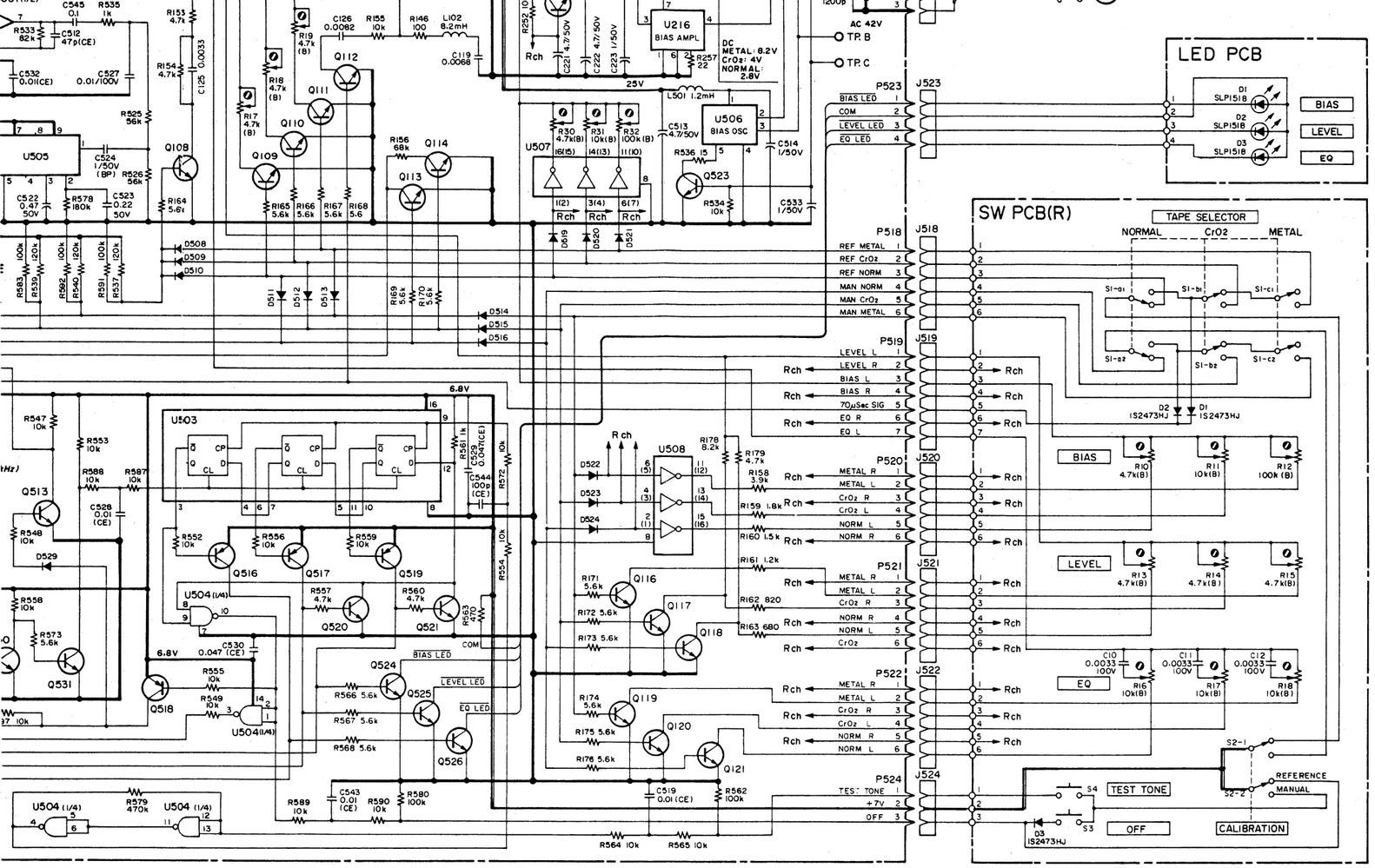

NOTES

1. Schematic diagram is shown for left channel, unless otherwise noted.
2. Resistor values are in ohms (k=kilo-ohms M=megohms).
3. All capacitor values are in microfarads (p=picofarads).
   All non-polarized capacitors are ±5% Mylar, unless otherwise noted.
4. Voltage and level values are values of actural measurement.
   0 dB=0.775V
5. [ ] : Front panel indication
6. [ ] : Rear panel indication
7. ——— +B power supply circuit
8. ——— −B power supply circuit
9. ⚠ Parts marked with this sign are safety critical components. They must always be replaced with identical components.
   Refer to the appropriate parts list to ensure exact replacement.

注

1. アンプ回路は一部を除きLchのみが示されています.
2. 抵抗の単位はΩ(k=kΩ, M=MΩ)です.
3. コンデンサの単位はμF(p=pF)です.
   特に指定のない無極性コンデンサは, 偏差±5%のマイラコンデンサです.
4. 電圧及びレベルは参考値です.
   0 dB=0.775V
5. [ ] : フロント・パネル上の表示
6. [ ] : リア・パネル上の表示
7. ——— : +B電源回路
8. ——— : −B電源回路
9. ⚠マークのある部品は安全重要部品です.

Z-5000

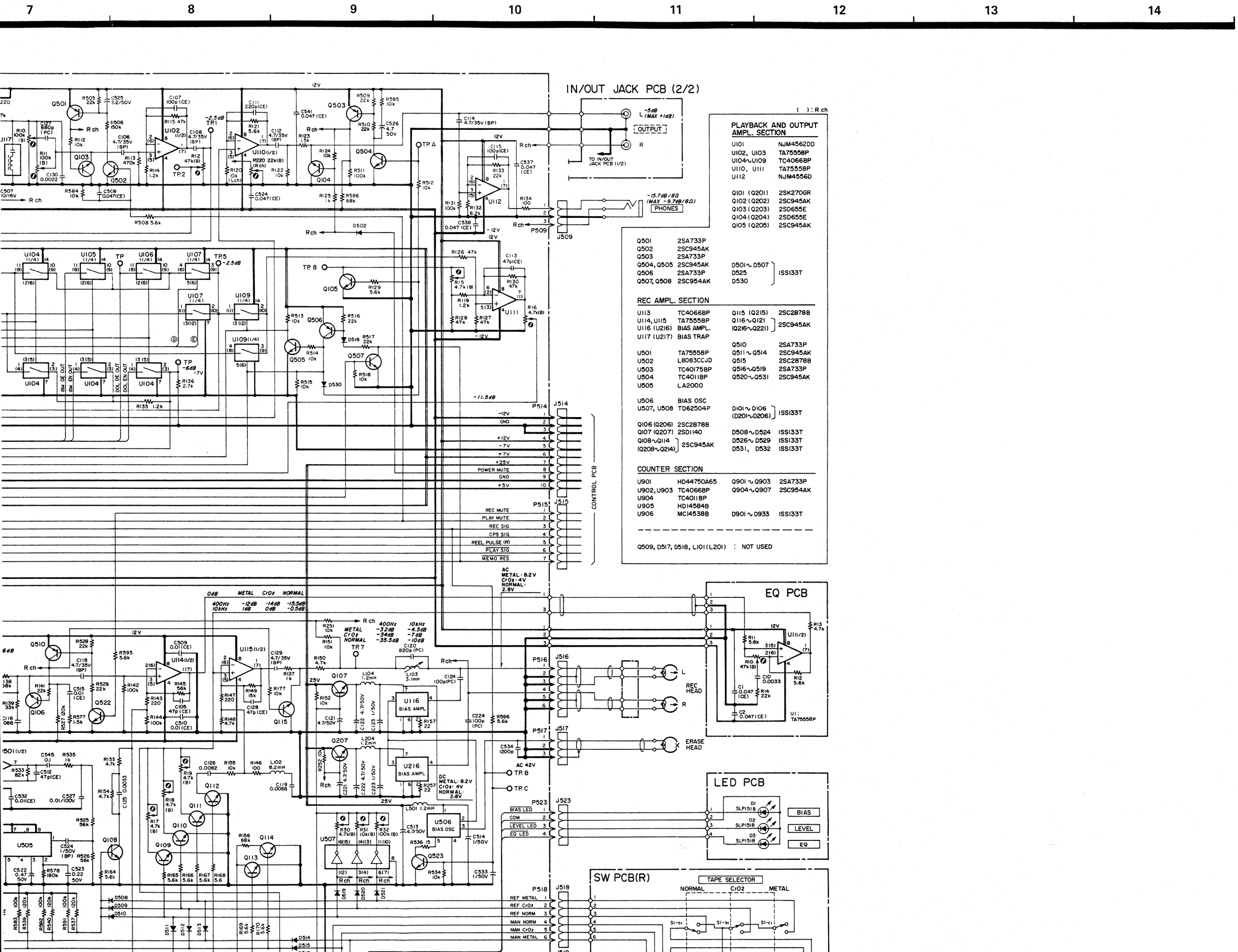

( ): R ch

PLAYBACK AND OUTPUT AMPL. SECTION

U101	NJM4562DD
U102, U103	TA75558P
U104∿U109	TC4066BP
U110, U111	TA75558P
U112	NJM4556D
Q101 (Q201)	2SK270GR
Q102 (Q202)	2SC945AK
Q103 (Q203)	2SD655E
Q104 (Q204)	2SD655E
Q105 (Q205)	2SC945AK

Q501	2SA733P		
Q502	2SC945AK		
Q503	2SA733P		
Q504, Q505	2SC945AK	D501∿D507 D525 D530	1SS133T
Q506	2SA733P		
Q507, Q508	2SC954AK		

REC AMPL. SECTION

U113	TC4066BP	Q115 (Q215)	2SC2878B
U114, U115	TA75558P	Q116∿Q121 (Q216∿Q221)	2SC945AK
U116 (U216)	BIAS AMPL.		
U117 (U217)	BIAS TRAP		
		Q510	2SA733P
U501	TA75558P	Q511∿Q514	2SC945AK
U502	L8083CCJD	Q515	2SC2878B
U503	TC40175BP	Q516∿Q519	2SA733P
U504	TC4011BP	Q520∿Q531	2SC945AK
U505	LA2000		
U506	BIAS OSC		
U507, U508	TD62504P	D101∿D106 (D201∿D206)	1SS133T
Q106 (Q206)	2SC2878B		
Q107 (Q207)	2SD1140	D508∿D524	1SS133T
Q108∿Q114 (Q208∿Q214)	2SC945AK	D526∿D529	1SS133T
		D531, D532	1SS133T

COUNTER SECTION

U901	HD44750A65	Q901∿Q903	2SA733P
U902, U903	TC4066BP	Q904∿Q907	2SC954AK
U904	TC4011BP		
U905	HD14584B		
U906	MC14538B	D901∿D933	1SS133T

Q509, D517, D518, L101 (L201) : NOT USED