ORDER NO. SD7603-1061

Service Manual

FM/AM STEREO RECEIVER

SA-5060

(M), (MC)

TECHNICAL SPECIFICATIONS (Specifications are subject to change without notice for further improvement.)

AMPLIFIER SECTION

Reted minimum sine wave RMS power output:
40 Hz ~ 20 kHz
both channels driven
0.9% total harmonic distortion
12 W per channel (8 ohms)
13 W per channel (4 ohms)

1 kHz continuous power output:
both channels driven 14 W per channel (8 ohms)
0.9% total harmonic distortion 16 W per channel (4 ohms)

Total harmonic distortion:	0.9% at rated power
	0.1% at half power
Intermodulation distortion:	0.9%
Damping factor:	40 (8 ohms)
Input sensitivity and impedance:	
PHONO	2.5 mV/47 kilohms
AUX	150 mV/20 kilohms
TAPE PLAYBACK	150 mV/20 kilohms
PHONO maximum input voltage (1 kHz, RMS):	130 mV
S/N (IHF, A):	
PHONO	74 dB
AUX	90 dB
Frequency response:	
PHONO	RIAA Standard carve ±1.0 dB
AUX	20 ~ 20 kHz, +1.5 dB, −0.3 dB
Tone controls:	
BASS	50 Hz, +10 dB ~ −10 dB
TREBLE	10 kHz, +10 dB ~ −10 dB
Loudness control (volume at −30 dB):	50 Hz, +10 dB
Output voltage:	
TAPE REC OUT	150 mV
Load impedance:	4 ~ 16 ohms

FM TUNER SECTION

Frequency range:	88 ~ 108 MHz
Sencitivity:	2.0 μV
Total harmonic distortion:	
MONO	0.15%
STEREO	0.4%
S/N:	70 dB
Frequency response:	20 Hz ~ 15 kHz, +1 dB, −2 dB
Alternate channel selectivity:	55 dB
Capture ratio:	1.5 dB
Image rejection at 98 MHz:	50 dB
IF rejection at 98 MHz:	75 dB
AM suppression:	55 dB
Stereo separation:	
1 kHz	42 dB
10 kHz	35 dB
Leak carrier:	−40 dB

AM TUNER SECTION

Frequency range:	525 ~ 1605 kHz
Sensitivity:	30 μV, 300 μV/m
Selectivity:	20 dB
Image rejection at 1000 kHz:	37 dB
IF rejection at 1000 kHz:	40 dB

GENERAL

Power consumption:	80 W
Power supply:	AC 60 Hz, 120 V
Dimensions (W × H × D):	$16\frac{17}{32}'' \times 5\frac{1}{2}'' \times 12\frac{13}{32}''$
	(420 × 142 × 315) mm
Weight:	13.4 lb. (6.1 kg)

Technics
by Panasonic

Matsushita Electric Corp. of America
1 Panasonic Way, Secaucus, N.J. 07094

Matsushita Electric of Hawaii, Inc.
320 Waiakamilo Road, Honolulu, Hawaii 96817

Matsushita Electric of Canada Ltd.
40 Ronson Drive, Rexdale, Ont.

www.hifiengine.com

■ LOCATION OF CONTROLS

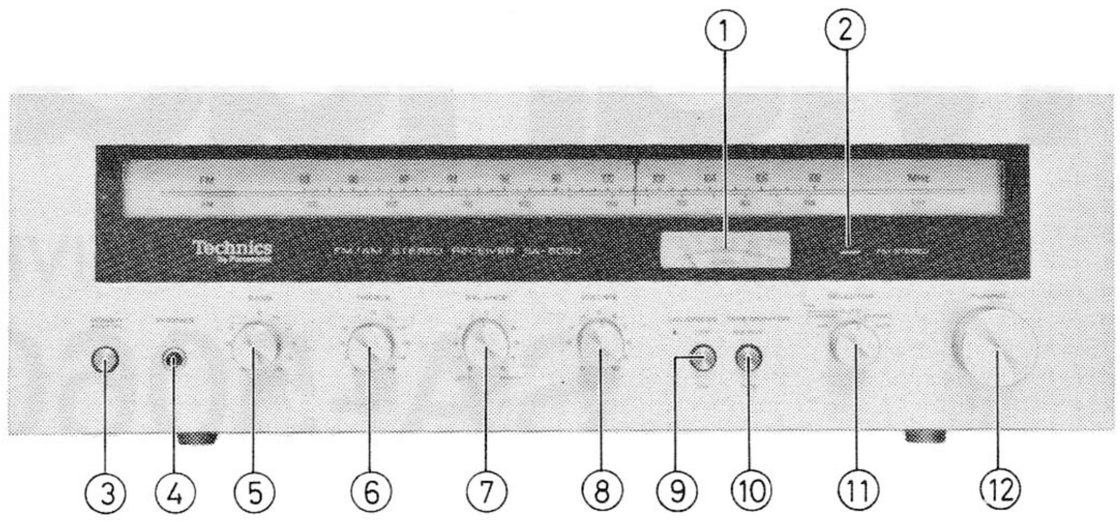

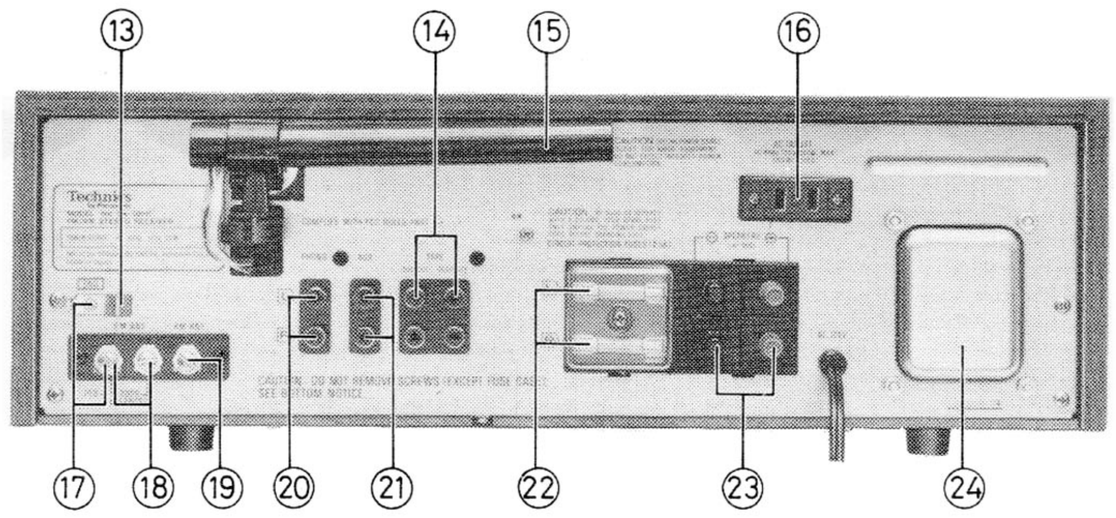

① SIGNAL METER
② FM STEREO INDICATOR
③ POWER SOURCE PUSH SWITCH
④ HEADPHONES JACK
⑤ BASS CONTROL
⑥ TREBLE CONTROL
⑦ BALANCE CONTROL
⑧ VOLUME CONTROL
⑨ LOUDNESS PUSH SWITCH
⑩ TAPE MONITOR PUSH SWITCH
⑪ SELECTOR SWITCH
⑫ TUNING CONTROL
⑬ GROUND TERMINAL
⑭ TAPE DECK CONNECTION TERMINALS
⑮ AM FERRITE ANTENNA COIL
⑯ AC OUTLET
⑰ FM ANTENNA TERMINALS...75Ω
⑱ FM ANTENNA TERMINALS...300Ω
⑲ AM ANTENNA TERMINAL
⑳ PHONO INPUT TERMINALS
㉑ AUX INPUT TERMINALS
㉒ CIRCUIT PROTECTION FUSES
㉓ SPEAKER TERMINALS
㉔ POWER TRANSFORMER

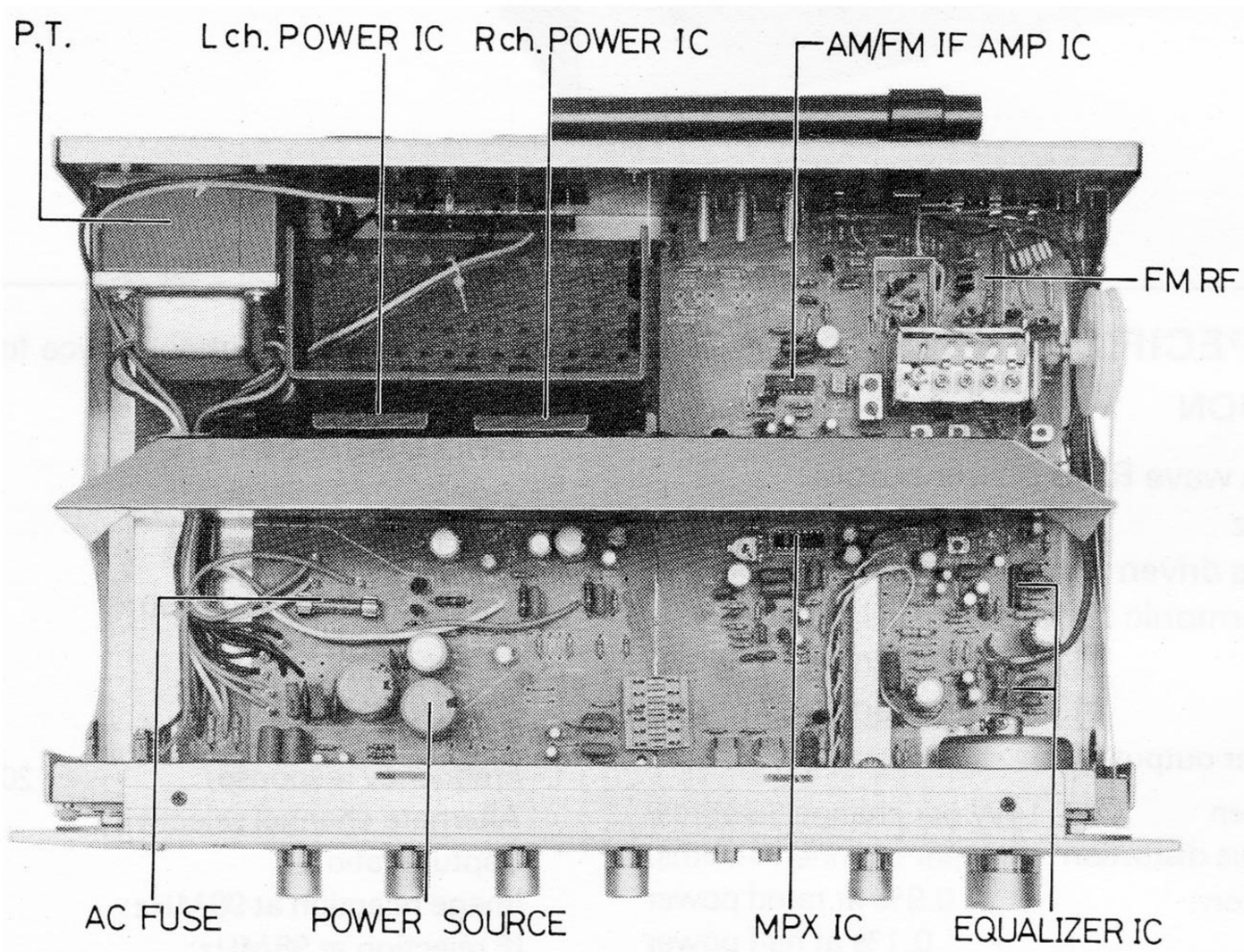

■ DIAL CORD INSTALLATION GUIDE

1. Dial cord length is 76-7/8" (195cm).
2. Tuning gang is positioned at maximum capacity. (Frequency is minimum)
3. Arrow marks (1~9) indicated correct order and direction of stringing dial cord.

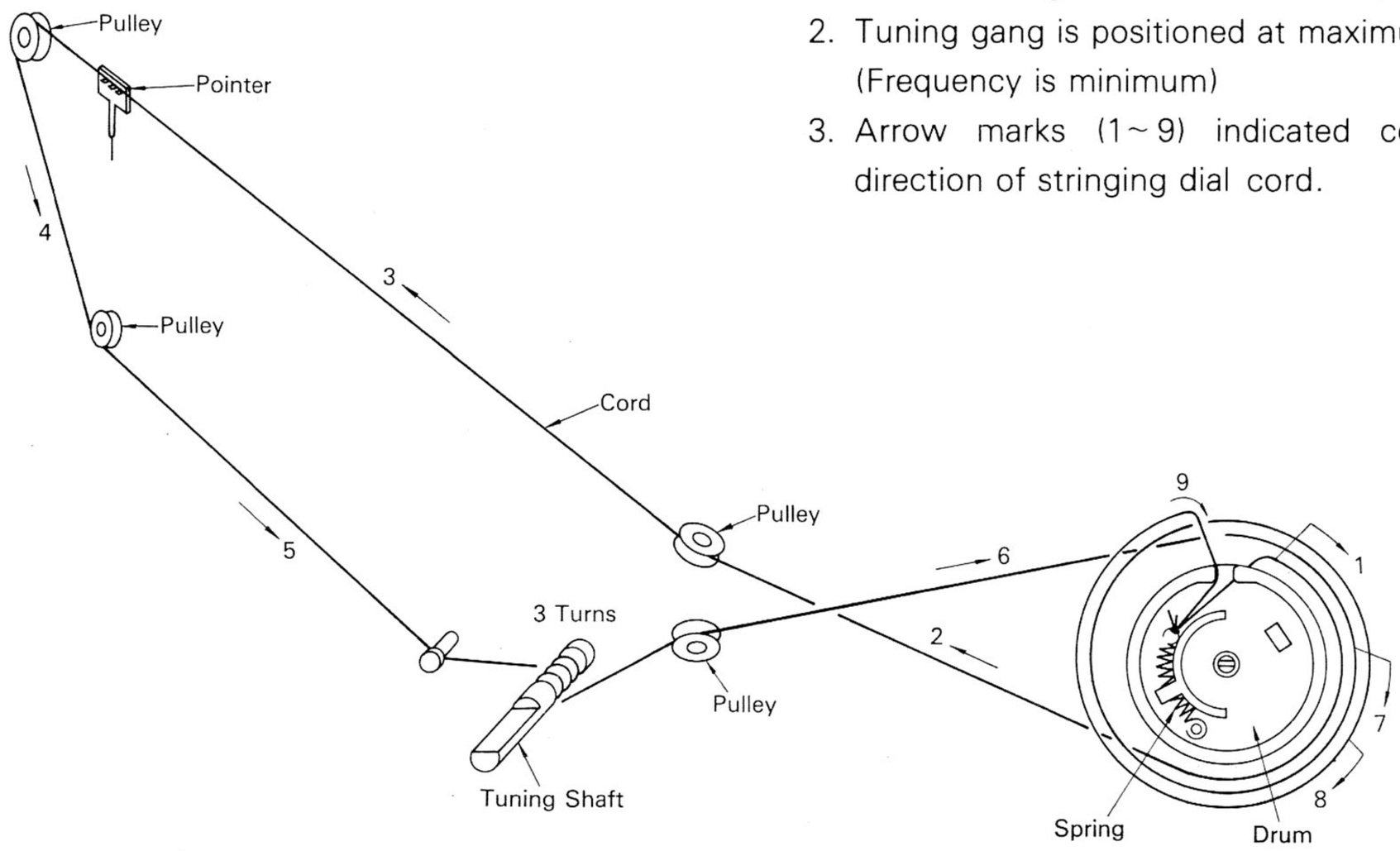

■ ALIGNMENT INSTRUCTIONS

Notes:
1. Volume control ..... Maximum.
2. Balance control ..... Center.
3. Selector switch ..... AM, FM MONO (FM-RF, FM-IF).
4. Tape monitor switch ..... Source.
5. Maintain line voltage at 120 volts.
6. Output of signal generator should be no higher than necessary to obtain an output reading.
7. 300 Ω FM Dummy antenna ..... Refer to fig. 2.

	SIGNAL GENERATOR or SWEEP GENERATOR		DIAL SETTING	INDICATOR (VTVM or SCOPE) (DISTORTION METER)	ADJUSTMENT POINTS	REMARKS
	CONNECTION	FREQUENCY				
	AM ALIGNMENT					
1	High side through 0.001 μ F to AM ANT trimmer terminal Common to chassis.	455 kHz	Point of non-inter-ference	Connect vertical amplifier of scope to **TP205** through 0.1 μ F capacitor.	T204 (1st IFT) T205 (2nd IFT) T202 (IF Trap)	Adjust for maximum output.
2	Fashion loop of several turns of wire and radiate signal into loop of receiver.	600 kHz (30% Mod. with 400 Hz)	600 kHz	Connect VTVM or scope to speaker terminal of receiver.	T203 (OSC Coil) L1 (ANT Coil)	Adjust for maximum output. Adjust ferrite core of L1 by screw driver.
3	Fashion loop of several turns of wire and radiate signal into loop of receiver.	1500 kHz (30% Mod. with 400 Hz)	1500 kHz	Connect VTVM or socpe to speaker terminal of receiver.	CT202 (OSC Trimmer) CT201 (ANT Trimmer)	Adjust for maximum output. Repeat steps (2) and (3).
	FM-IF ALIGNMENT					
4		No Signal	Point of non-inter-ference	Connect DC voltmeter between **TP202** and **TP203**, refer to fig. 1.	T201 (DISCRI IFT) (A) Orange Core	Adjust for 0 mV indication.
	FM-RF ALIGNMENT					
5	Connect to FM antenna terminal through FM dummy antenna.	90 MHz (100% Mod. with 400 Hz)	90 MHz	Connect VTVM or scope to speaker terminal of receiver.	L105 (OSC Coil) L103 (DET Coil) L102 (ANT Coil)	Adjust for maximum output.
6	Connect to FM antenna terminal through FM dummy antenna.	106 MHz (100% Mod. with 400 Hz)	106 MHz	Connect VTVM or scope to speaker terminal of receiver.	CT103 (OSC Trimmer) CT102 (DET Trimmer) CT101 (ANT Trimmer)	Adjust for maximum output. Repeat steps (5) and (6)
	FM MONO DISTORTION ALIGNMENT					
7	Connect to FM antenna terminal through FM dummy antenna.	100 MHz (100% Mod. with 400 Hz)	100 MHz	Connect distortion meter to speaker terminal of receiver.	T201 (DISCRI IFT) (B) Green Core	Adjust for minimum of distortion meter indication. Repeat steps (4) and (7).

	FM MPX PILOT ALIGNMENT	
	When use the frequency counter	When not use the frequency counter
8	① 98 MHz Non-modulation mono signal applied to set. ② Selector switch to FM AUTO. ③ Connect the frequency counter to **TP301** through 100 kΩ. ④ Adjust **R301** to 19 kHz ±30 Hz.	① Stereo signal applied to set or receive the stereo station. ② Adjust VR301 to lighting point of stereo indicator and sement contactor of **R301** as shown fig. 3.

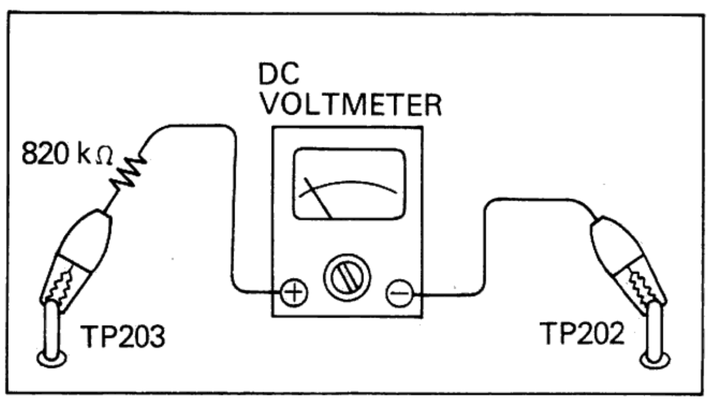

Fig. 1

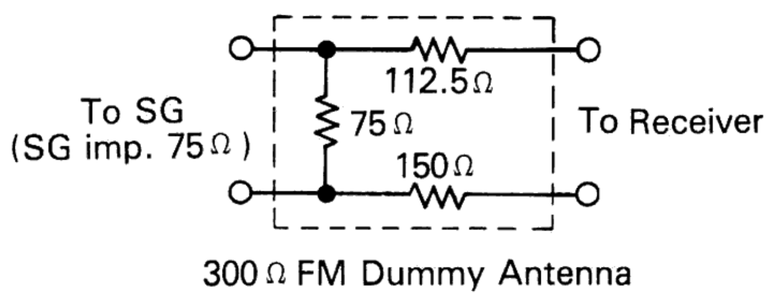

Fig. 2

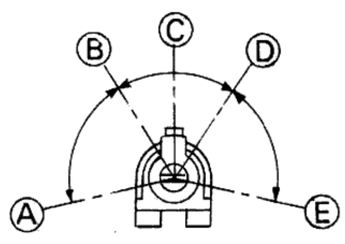

R301

A – B, D – E: Stereo OFF Position.
B – D: Stereo ON Position (Indicator Lighting).
C: Adjust Point of Pilot Circuit.

Fig. 3

www.hifiengine.com

■ ALIGNMENT POINTS

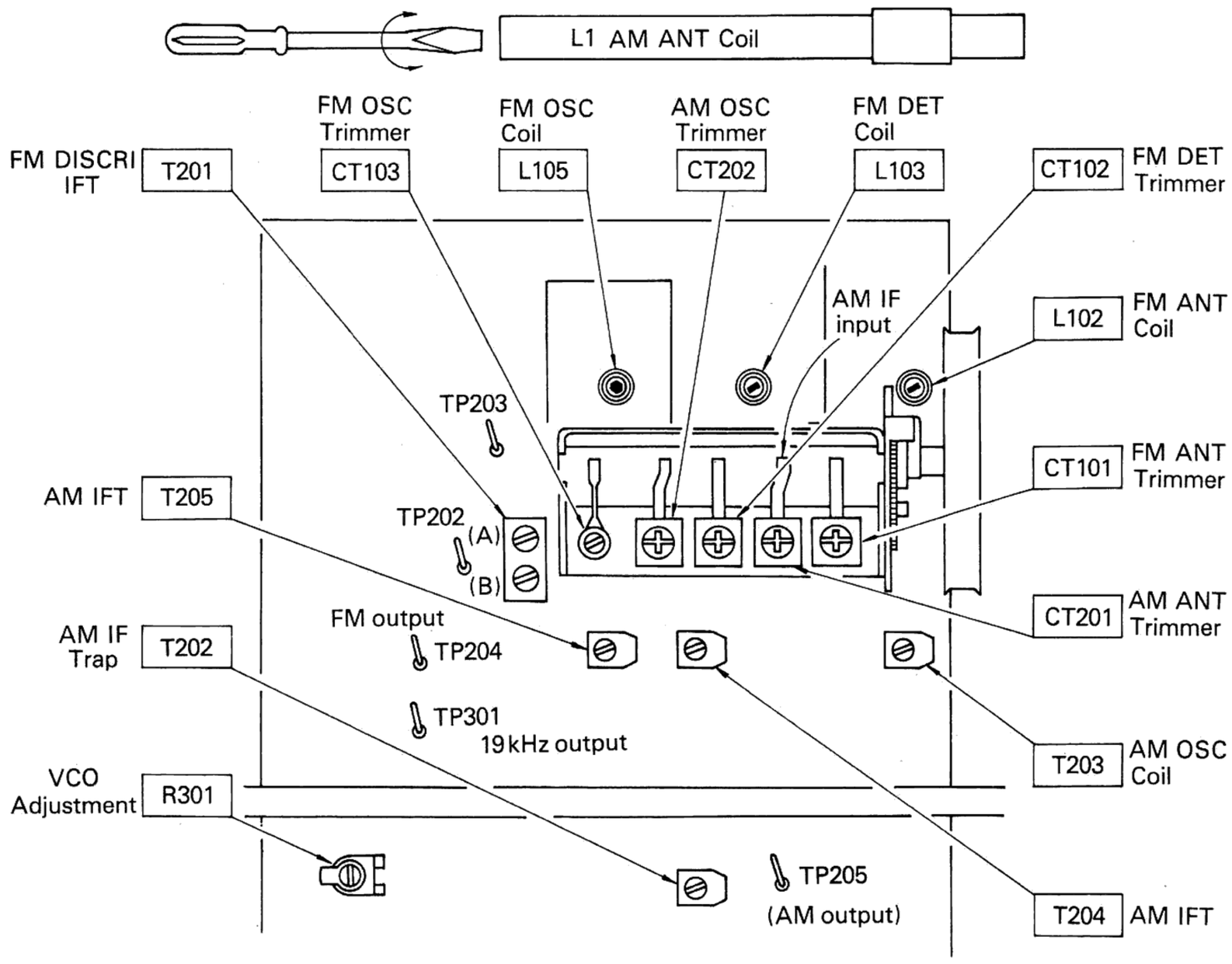

■ BLOCK DIAGRAM

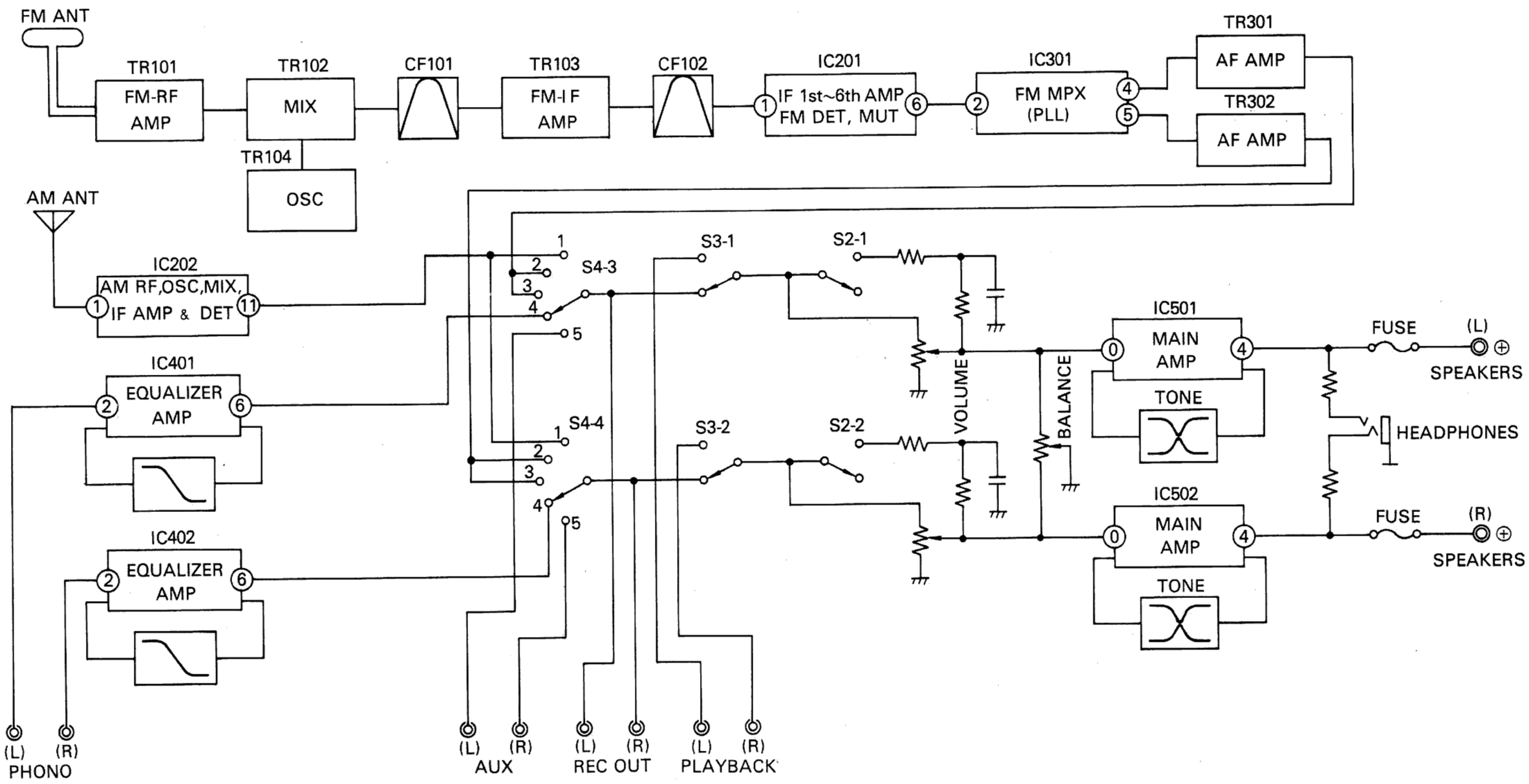

■ TO REMOVE CABINET

(1) Remove four (4) cabinet mounting screws (side) Nos 1~4, as shown in fig. 4.

(2) Remove metal fitting of cabinet from holes A and B of front panel in arrow direction ①, as shown in fig. 4.

(3) Remove cabinet from chassis in arrow direction ②, as shown in fig. 4.

(4) To reassemble, reverse above procedure.

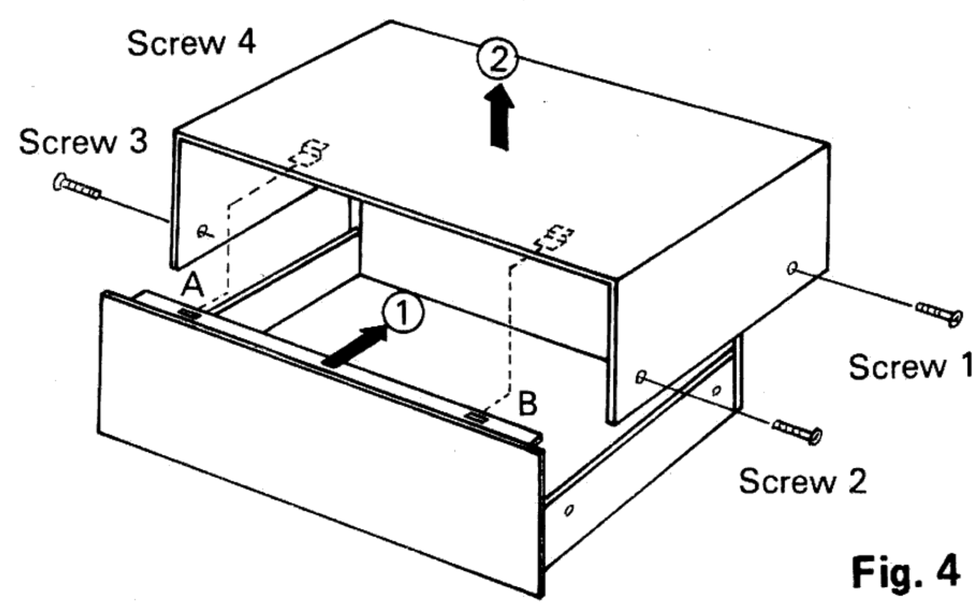

Fig. 4

www.hifiengine.com

■ BLOCK DIAGRAM OF INTEGRATED CIRCUIT

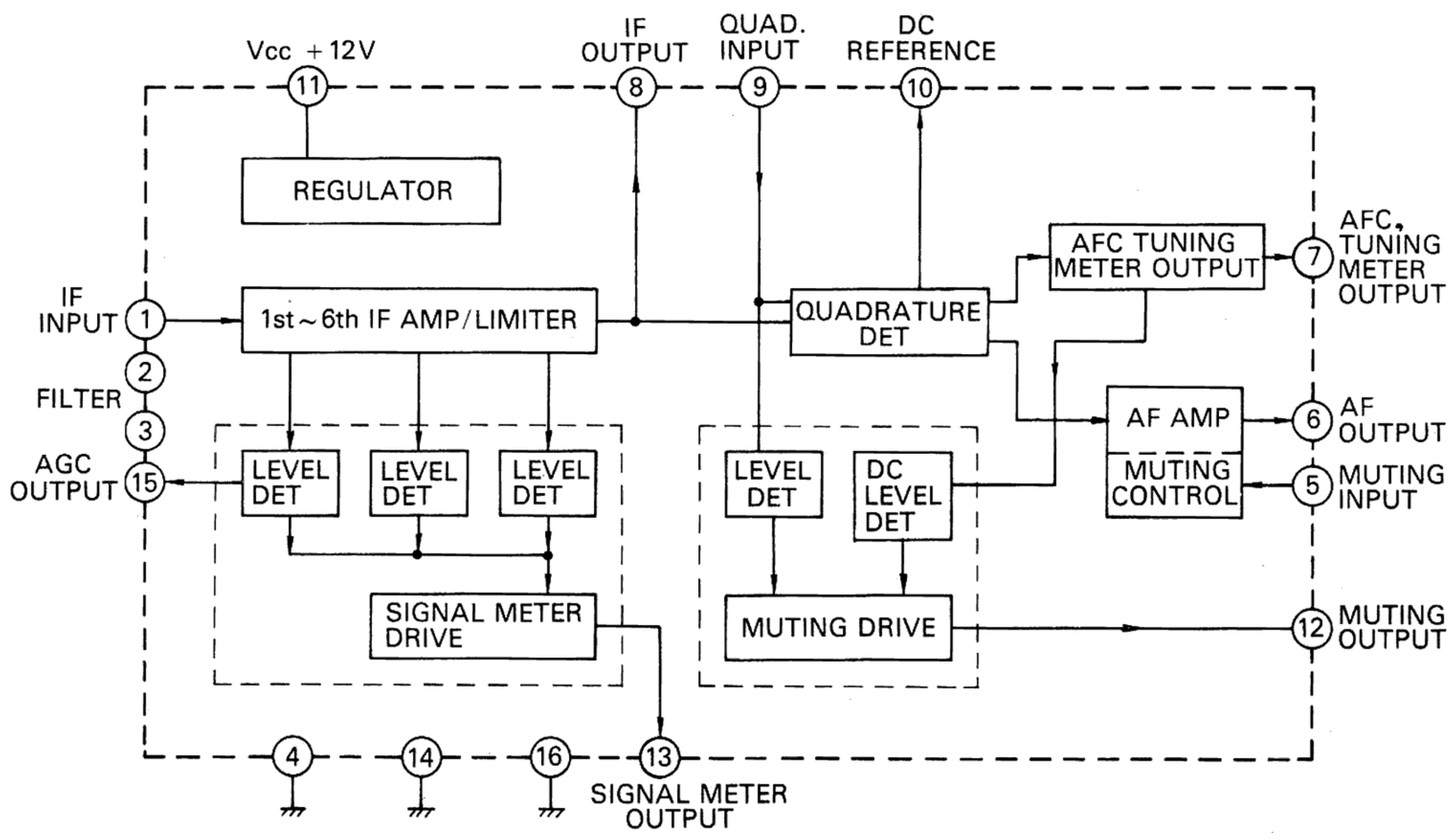

IC201 SVILA1230
FM IF 1st~6th AMP,
FM DETECTOR, MUTING

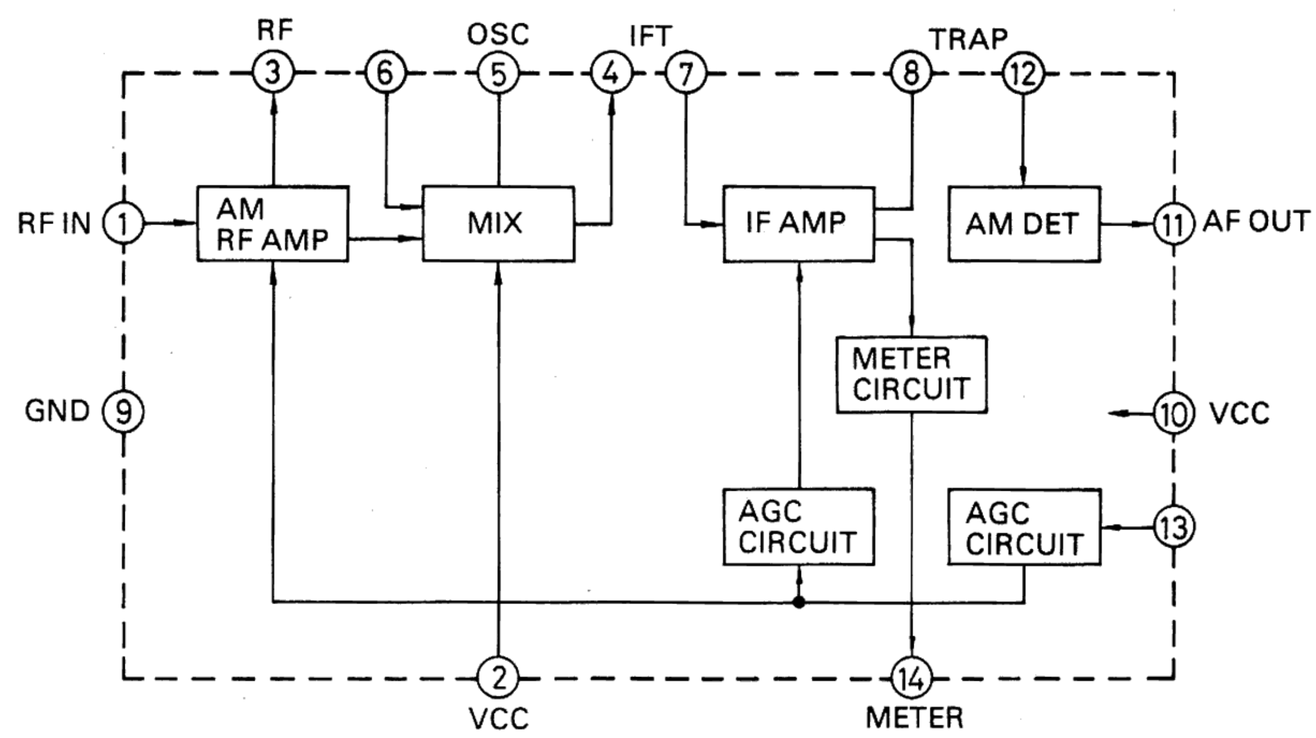

IC202 SVIHA1151
AM RF, OSC, MIX,
IF AMP & DETECTOR

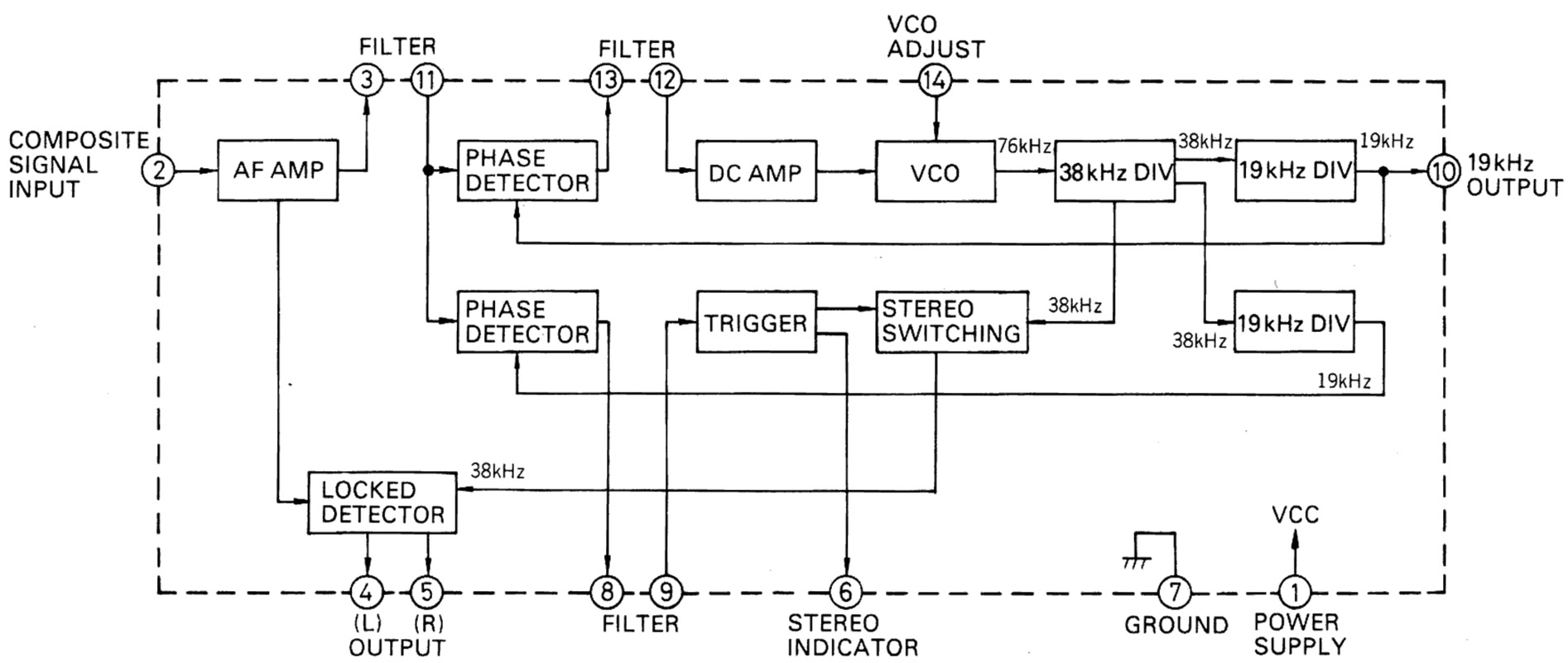

IC301 SVIHA1156
(FM MPX)

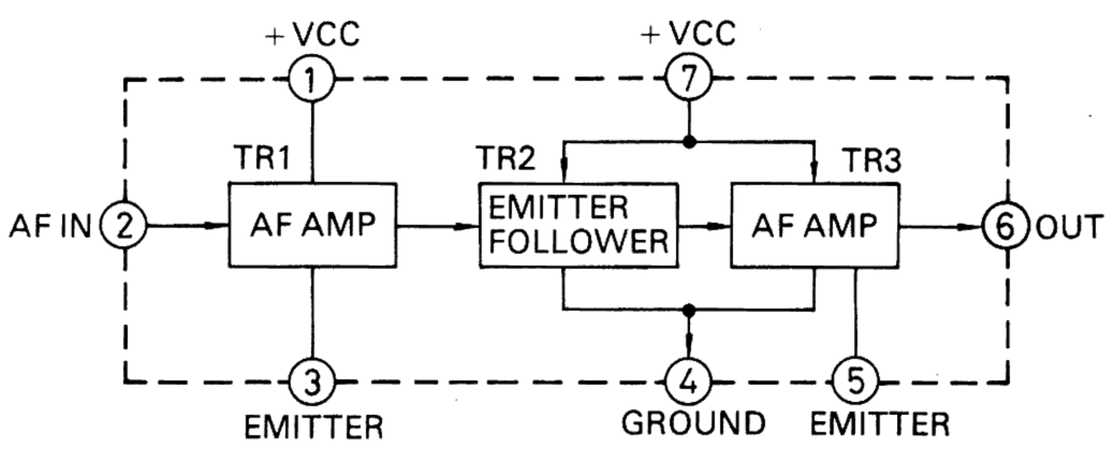

IC401, 402 SVITA7129
(EQUALIZER AMP)

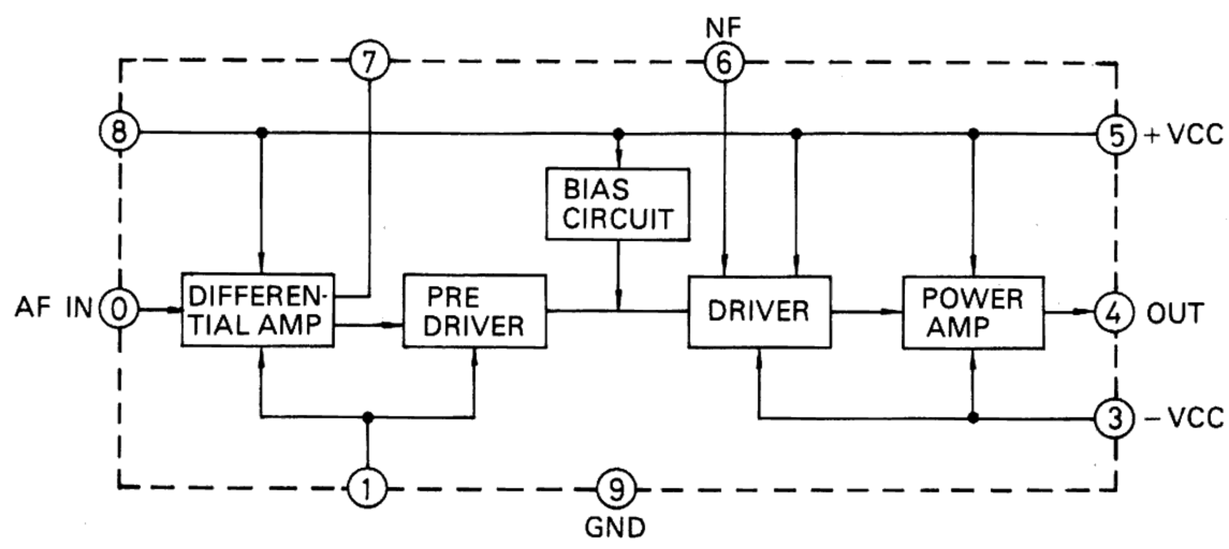

IC501, 502 SVISTK027K
(MAIN AMP)

www.hifiengine.com

Schematic Diagram.....Model SA-5060

(This schematic diagram may be modified at any time with the development of new technology)

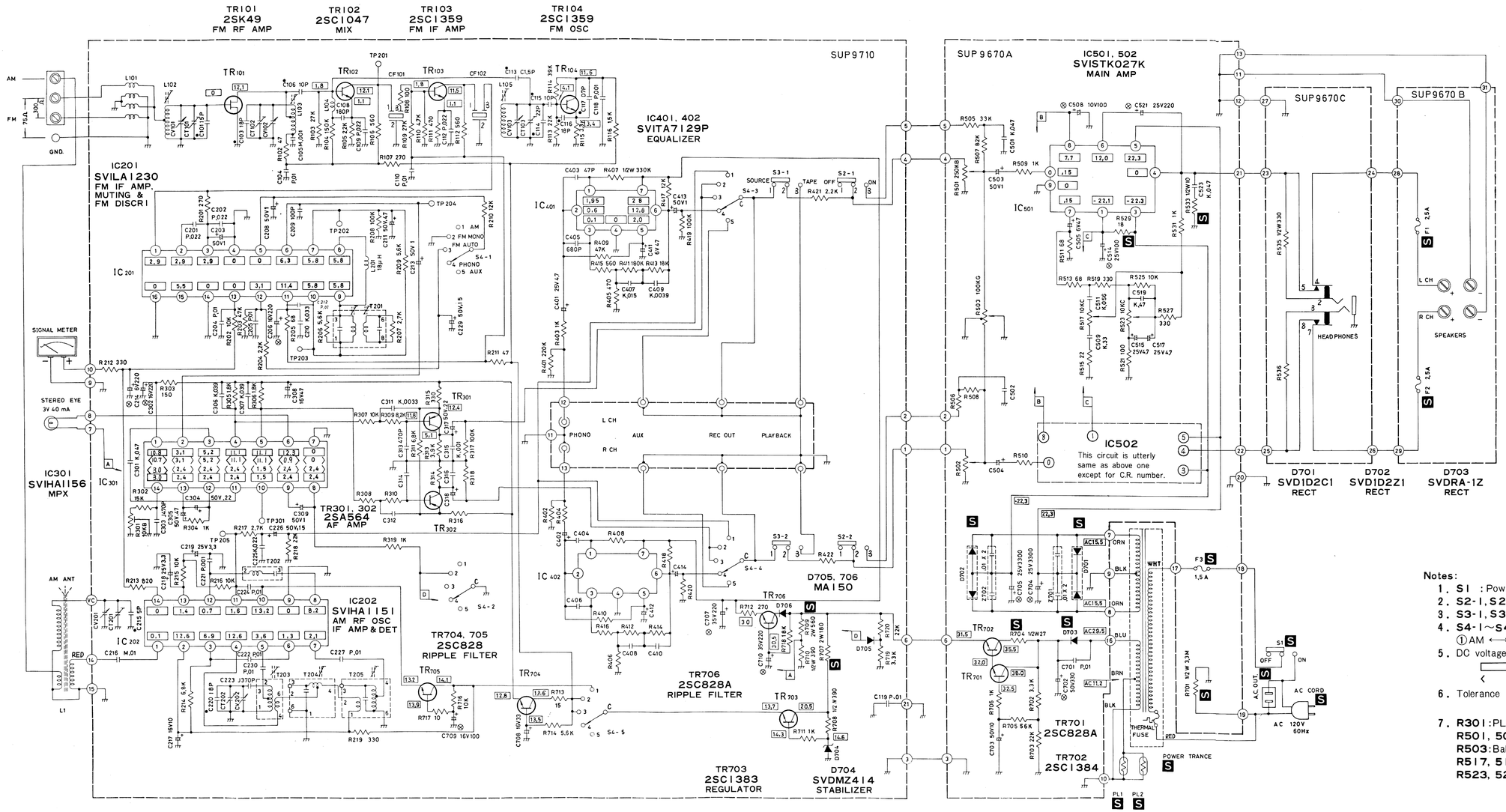

BOTTOM VIEW

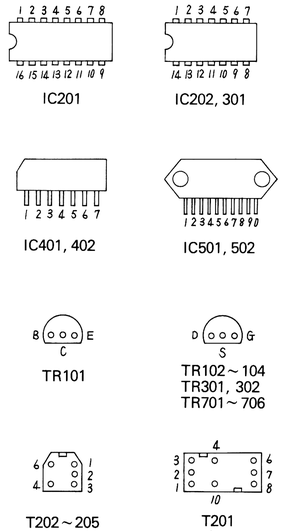

Notes:

1. S1 : Power source switch in 「OFF」 position.
2. S2-1, S2-2: Loudness switch in 「OFF」 position.
3. S3-1, S3-2: Tape monitor switch in 「SOURCE」 position.
4. S4-1～S4-5: Selector switch in 「PHONO」 position.
   ① AM ⟷ ② FM MONO ⟷ ③ FM AUTO ⟷ ④ PHONO ⟷ ⑤ AUX
5. DC voltage measurements are taken with DC VTVM from chassis ground.
   ▭ AM/FM mono signal reception.
   〈 〉 FM Stereo signal reception.
6. Tolerance J = ± 5%, K = ± 10%, M = ± 20%,
   P = ± 100/0%, C = ± 0.25 pF, D = ± 0.5 pF
7. R301 : PLL Voltage control oscillator adjustment.
   R501, 502: Volume Control.
   R503: Balance Control.
   R517, 518: Treble Control
   R523, 524: Bass Control

■ FM, AM Tuner & Equalizer Circuit Board

TR101 (2SK49)

FM RF	
D	12.1 V
G	0 V
S	0 V

TR102 (2SC1047)

FM MIX	
C	12.1 V
B	1.8 V
E	1.1 V

TR104 (2SC1359)

FM OSC	
C	11.6 V
B	4.1 V
E	3.4 V

TR103 (2SC1359)

FM IF	
C	11.5 V
B	1.8 V
E	1.1 V

IC201 (SVILA1230) FM IF AMP

1	2.9 V	5	0 V	9	5.8 V	13	0 V
2	2.9 V	6	6.3 V	10	5.8 V	14	0 V
3	2.9 V	7	5.8 V	11	11.4 V	15	5.5 V
4	0 V	8	5.8 V	12	3.1 V	16	0 V

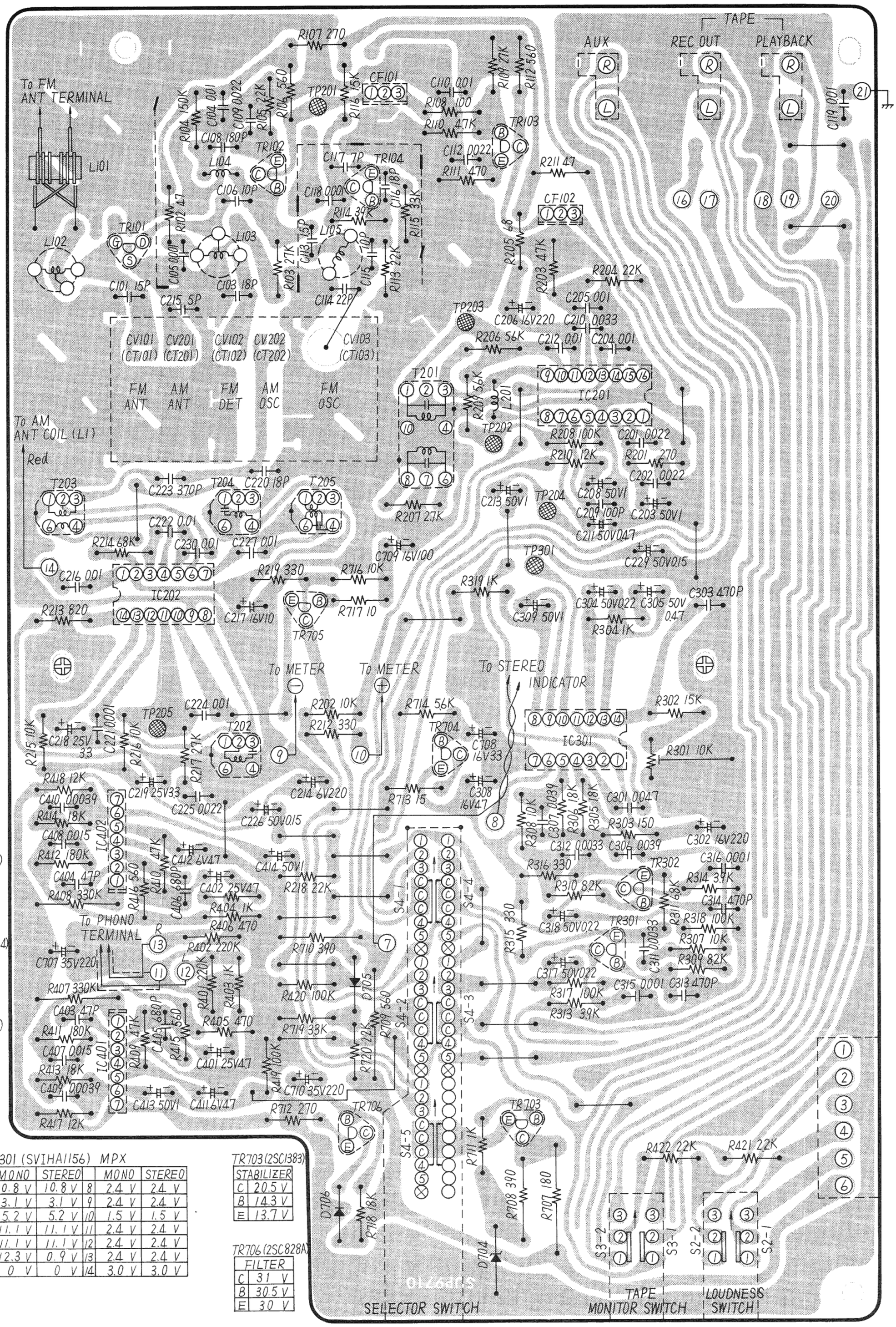

IC202 (SVIHA1151)

AM RF. OSC. IF. DET			
1	0.1 V	8	8.2 V
2	12.6 V	9	0 V
3	6.9 V	10	13.2 V
4	12.6 V	11	1.6 V
5	3.6 V	12	0.7 V
6	1.3 V	13	1.4 V
7	2.1 V	14	0 V

TR705 (2SC828)

FILTER	
C	14.1 V
B	13.9 V
E	13.2 V

IC402 (SVITA7129)

EQ. AMP	
1	1.95 V
2	0.6 V
3	0.1 V
4	0 V
5	2 V
6	12.8 V
7	2.8 V

TR704 (2SC828)

FILTER	
C	13.6 V
B	13.5 V
E	12.8 V

TR301, 302 (2SA564)

AF AMP	
C	5.1 V
B	11.8 V
E	12.4 V

IC401 (SVITA7129)

EQ. AMP	
1	1.95 V
2	0.6 V
3	0.1 V
4	0 V
5	2 V
6	12.8 V
7	2.8 V

IC301 (SVIHA1156) MPX

	MONO	STEREO		MONO	STEREO
1	10.8 V	10.8 V	8	2.4 V	2.4 V
2	3.1 V	3.1 V	9	2.4 V	2.4 V
3	5.2 V	5.2 V	10	1.5 V	1.5 V
4	11.1 V	11.1 V	11	2.4 V	2.4 V
5	11.1 V	11.1 V	12	2.4 V	2.4 V
6	12.3 V	0.9 V	13	2.4 V	2.4 V
7	0 V	0 V	14	3.0 V	3.0 V

TR703 (2SC1383)

STABILIZER	
C	20.5 V
B	14.3 V
E	13.7 V

TR706 (2SC828A)

FILTER	
C	31 V
B	30.5 V
E	30 V

www.hifiengine.com

■ Main Amp & Power Supply Circuit Board

IC501. 502 (SVI STK027K)

MAIN AMP			
1	-22.1 V	6	12 V
2	——	7	0.15 V
3	-22.3 V	8	7.7 V
4	0 V	9	0 V
5	22.3 V	0	0.15 V

TR702 (2SC1384)

FILTER	
C	35.5 V
B	32 V
E	31.5 V

TR701 (2SC828A)

FILTER	
C	38 V
B	32.5 V
E	32 V

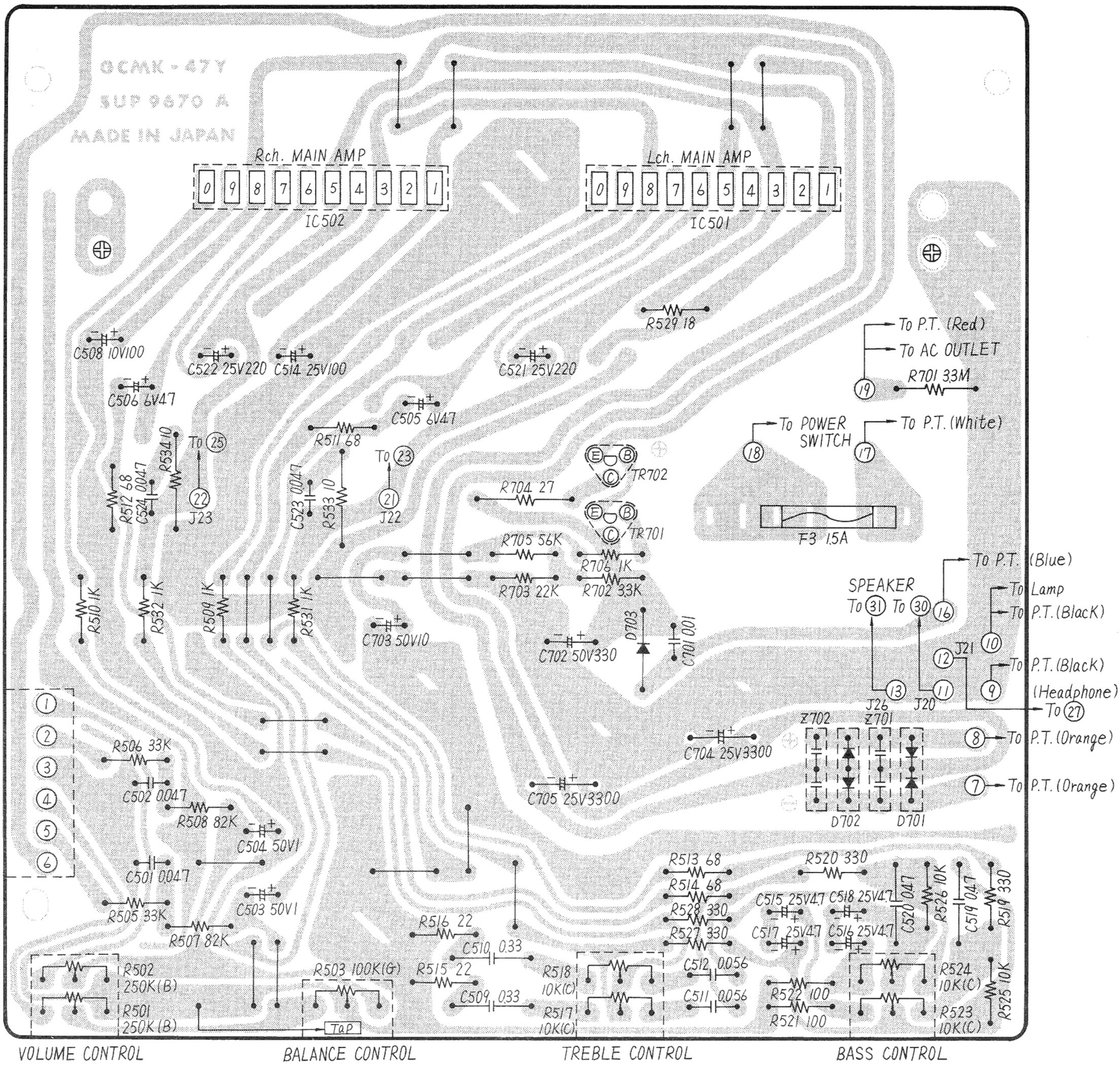

■ Speaker Terminal & Circuit Protection Circuit Board

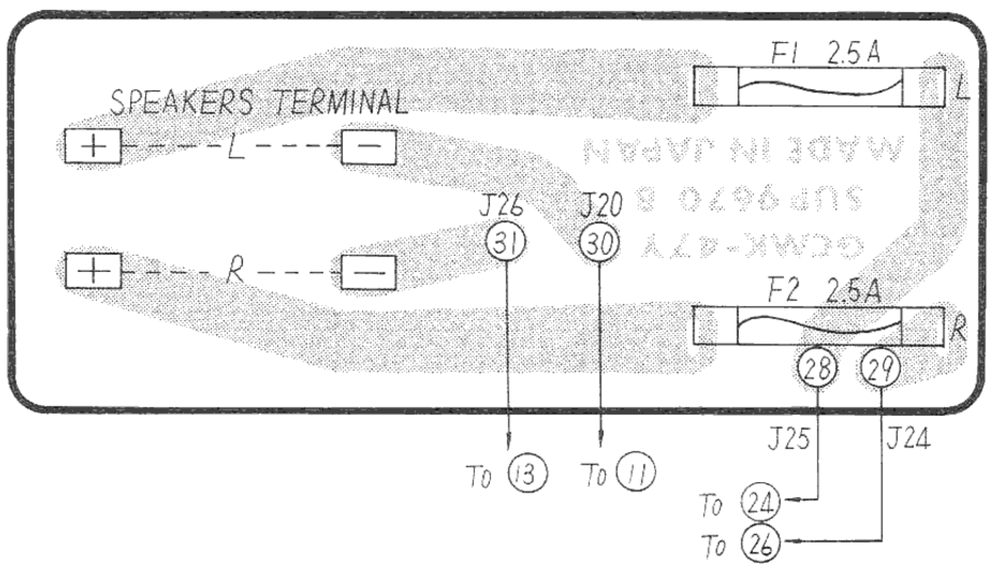

■ Headphone Circuit Board

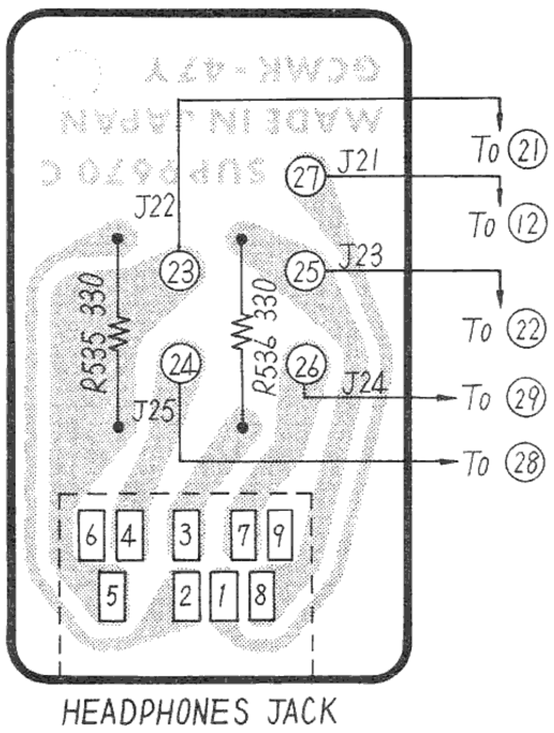

www.hifiengine.com

■ CABINET AND CHASSIS PARTS LOCATIONS

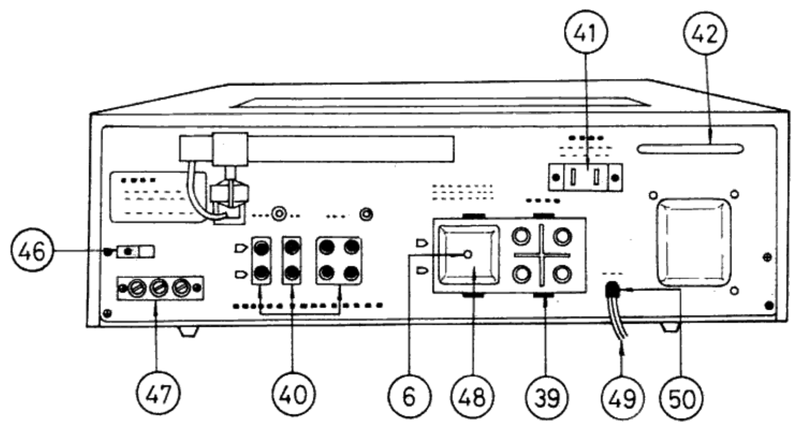

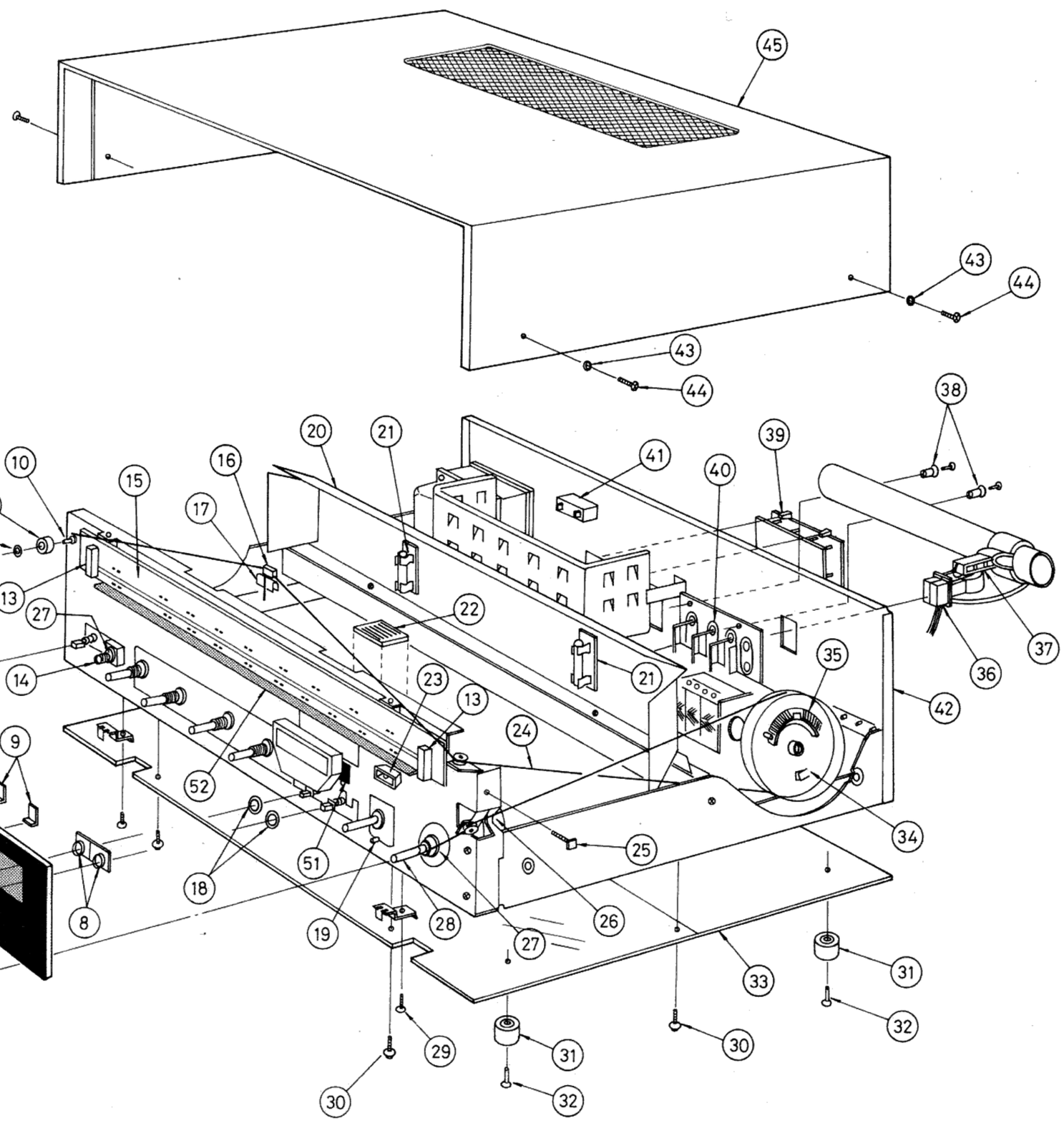

■ PACKING PARTS

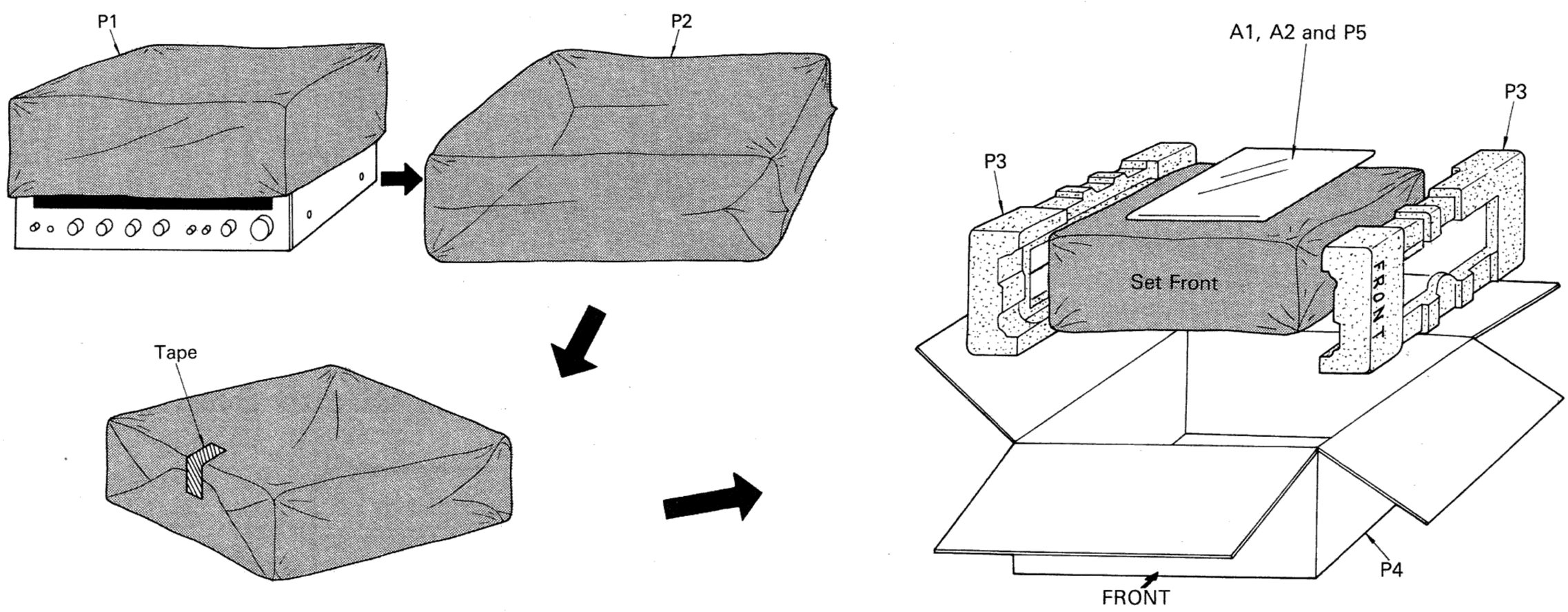

■ ACCESSORIES

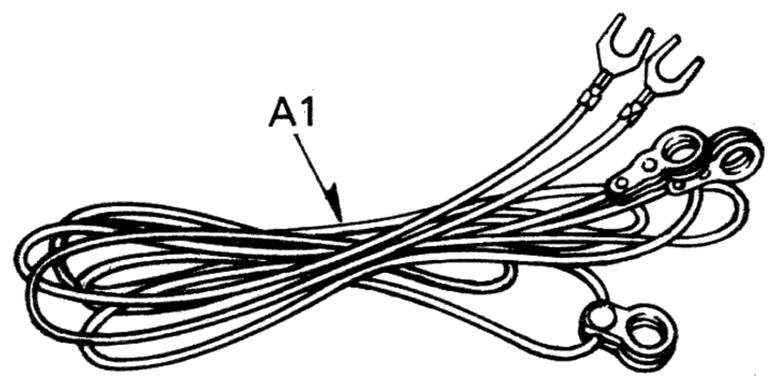

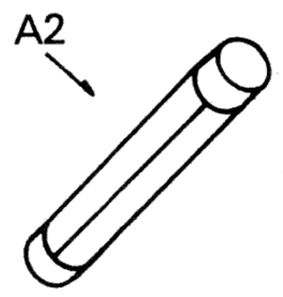

www.hifiengine.com

■ REPLACEMENT PARTS LIST

NOTES: 1. Part numbers are indicated on most mechanical parts.
Please use this part number for parts orders.
2. SAFETY Indicates, for safety reasons, that only parts specified in service manual be used for replacement.

Ref. No.	Part No.	Part Name & Description	Per Set		Remarks
		INTEGRATED CIRCUITS			
IC201	SVILA1230	FM IF Amp & Discrininator	1	○	
IC202	SVIHA1151	AM RF, IF Amp. OSC & Detector	1		
IC301	SVIHA1156W	FM MPX, PLL Type	1		
IC401,402	SVITA7129P	Equalizer Amplifier	2		
IC501,502	SVISTK027K	Main Amplifier	2		
		TRANSISTORS			
TR101	2SK49-H1	FM RF Amplifier	1		
TR102	2SC1047-C	FM Mixer	1		
TR103,104	**2SC1359-B**	FM OSC & IF Amplifier	2		
TR301,302	**2SA666A ① -R**	AF Amplifier	2		
TR701	**2SC828A-R**	Ripple Filter	1		
TR702,703	**2SC1384A-Q**	Ripple Filter ,Regulator	2		
TR704,705 706	**2SC828A-S**	Ripple Filter	3		
		DIODES			
D701	SVD1D2C1	Rectifier	1		SAFETY
D702	SVD1D2Z1	Rectifier	1		SAFETY
D703	SVDRA-1Z	Rectifier	1		SAFETY
D704	SVDMZ414	Voltage Stabilizer, 14V Zener	1	○	
D705,706	MA150	Voltage Stabilizer	2		
		COILS and TRANSFORMERS			
L101	SLAA4W1-3	Balun Coil	1		
L102	SLAA4N9	FM Antenna Coil	1		
L103	SLDA4N18	FM Detector Coil	1		
L104	RLQY15G5	Choke Coil	1		
L105	SLOA4N9	FM Oscillator Coil	1		
L201	SLQX180-1	Choke Coil	1		
L1	SLF2D23	AM Antenna Coil	1	○	
T201	SLI4D513	FM IF Transformer	1		
T202	SLI2M401	AM IF Filter	1		
T203	RLO2M4P	AM Oscillator Coil	1		
T204	RLI2M201	AM IF Transformer, Primary	1	○	
T205	RLI2M202	AM IF Transformer, Secondary	1	○	
T1	SLT5N161W	Power Transformer , TPK0128	1	○	SAFETY
		CERAMIC FILTERS			
CF101,102	SVFE107MA8A	FM IF Circuit, Red, 10.7MHz	each 2		
	SVFE107MA8B	FM IF Circuit, Blue, 10.67MHz			
	SVFE107MA8C	FM IF Circuit, Orange, 10.73MHz			
	SVFE107MA8D	FM IF Circuit, Black, 10.64MHz			
	SVFE107MA8E	FM IF Circuit, White, 10.76MHz			
	(Use pair ranks as same as CF101 and CF102)				

Ref. No.	Part No.	Part Name & Description	Per Set		Remarks
		RESISTORS			
R717	ERD18TJ100	10Ω, 1/8W, ±5%, Carbon	1		
R533,534	ERD12FJ100	10Ω, 1/2W, ±5%, Carbon	2		SAFETY
R713	ERD18TJ150	15Ω, 1/8W, ±5%, Carbon	1		
R529	ERD18FJ180	18Ω, 1/8W, ±5%, Carbon	1		SAFETY
R515,516	ERD18TJ220	22Ω, 1/8W, ±5%, Carbon	2		
R704	ERD12FJ270	27Ω, 1/2W, ±5%, Carbon	1		SAFETY
R102,211	ERD18TJ470	47Ω, 1/8W, ±5%, Carbon	2		
R205,511,512, 513,514	ERD18TJ680	68Ω, 1/8W, ±5%, Carbon	5		
R108,521,522	ERD18TJ101	100Ω, 1/8W, ±5%, Carbon	3		
R303	ERD18TJ151	150Ω, 1/8W, ±5%, Carbon	1		
R707	ERG2ANJ181	180Ω, 2W, ±5%, Metallic	1		
R107,201,712,	ERD18TJ271	270Ω, 1/8W, ±5%, Carbon	3		
R212,219,315, 316,519,520, 527,528	ERD18TJ331	330Ω, 1/8W, ±5%, Carbon	8		
R535,536	ERD12TJ331	330Ω, 1/2W, ±5%, Carbon	2		
R708,710	ERD12TJ391	390Ω, 1/2W, ±5%, Carbon	2		
R111,405,406	ERD18TJ471	470Ω, 1/8W, ±5%, Carbon	3		
R106,112,415, 416	ERD18TJ561	560Ω, 1/8W, ±5%, Carbon	4		
R709	ERG2ANJ561	560Ω, 2W, ±5%, Metallic	1		
R213	ERD18TJ821	820Ω, 1/8W, ±5%, Carbon	1		
R304,319,403, 404,509,510, 531,532,706, 711	ERD18TJ102	1kΩ, 1/8W, ±5%, Carbon	10		
R116	ERD18TJ152	1.5kΩ, 1/8W, ±5%, Carbon	1		
R305,306	ERD18TJ182	1 8kΩ, 1/8W, ±5%, Carbon	2		
R105,204,421, 422	ERD18TJ222	2.2kΩ, 1/8W, ±5%, Carbon	4		
R207,217	ERD18TJ272	2.7kΩ, 1/8W, ±5%, Carbon	2		
R115,702,719	ERD18TJ332	3.3kΩ, 1/8W, ±5%, Carbon	3		
R313,314	ERD18TJ392	3.9kΩ, 1/8W, ±5%, Carbon	2		
R110	ERD18TJ472	4.7kΩ, 1/8W, ±5%, Carbon	1		
R206,209,714	ERD18TJ562	5.6kΩ, 1/8W, ±5%, Carbon	3		
R214,311	ERD18TJ682	6.8kΩ, 1/8W, ±5%, Carbon	2		
R309,310	ERD18TJ822	8.2kΩ, 1/8W, ±5%, Carbon	2		
R202,215,216, 307,308,525, 526,716	ERD18TJ103	10kΩ, 1/8W, ±5%, Carbon	8		
R210,417,418	ERD18TJ123	12kΩ, 1/8W, ±5%, Carbon	3		
R302	ERD18TJ153	15kΩ, 1/8W, ±5%, Carbon	1		
R413,414,718	ERD18TJ183	18kΩ, 1/8W, ±5%, Carbon	3		
R113,218,703, 720	ERD18TJ223	22kΩ, 1/8W, ±5%, Carbon	4		
R103,109	ERD18TJ273	27kΩ, 1/8W, ±5%, Carbon	2		
R505,506	ERD18TJ333	33kΩ, 1/8W, ±5%, Carbon	2		
R114	ERD18TJ393	39kΩ, 1/8W, ±5%, Carbon	1		
R203,409,410	ERD18TJ473	47kΩ, 1/8W, ±5%, Carbon	3		
R705	ERD18TJ563	56kΩ, 1/8W, ±5%, Carbon	1		
R507,508	ERD18TJ823	82kΩ, 1/8W, ±5%, Carbon	2		
R208,317,318, 419,420	ERD18TJ104	100kΩ, 1/8W, ±5%, Carbon	5		
R104	ERD18TJ154	150kΩ, 1/8W, ±5%, Carbon	1		

www.hifiengine.com

Ref. No.	Part No.	Part Name & Description	Per Set		Remarks
R411,412	ERD18TJ184	180kΩ, 1/8W, ±5%, Carbon	2		
R401,402	ERD18TJ224	220kΩ, 1/8W, ±5%, Carbon	2		
R407,408	ERD12TSJ334	330kΩ, 1/2W, ±5%, Carbon	2		
R701	ERC12ZGK335	3.3MΩ, 1/2W, ±10%, Solid	1		SAFETY
		VARIABLE RESISTORS			
R301	EVLS3AA00B14	10kΩ (B), VCO Adjustment	1		
R501,502	EWKBJAF25BF5	250kΩ (B), Volume Control	1		○
R503	EVH7JAF25G15	100kΩ (G), Balance Control	1		○
R517,518,523, 524	EWKBAAF25C14	10kΩ (C), Bass & Treble Control	2		○
		CAPACITORS			
C113	ECCD1H1R5CC	1.5pF 50WV, ±0.25pF, Ceramic	1		
C215	ECCD1H050CC	5pF, 50WV, ±0.25pF, Ceramic	1		
C117	ECCD1H070DC	7pF, 50WV, ±0.5pF, Ceramic	1		
C106,115	ECCD1H100KC	10pF, 50WV, ±10%, Ceramic	2		
C101	ECCD1H150KC	15pF, 50WV, ±10%, Ceramic	1		
C103,116, 220	ECCD1H180KC	18pF, 50WV, ±10%, Ceramic	3		
C114	ECCD1H220KR	22pF, 50WV, ±10%, Ceramic	1		
C403,404	ECCD1H470K	47pF, 50WV, ±10%, Ceramic	2		
C209	ECCD1H101K	100pF, 50WV, ±10%, Ceramic	1		
C108	ECCD1H181K	180pF, 50WV, ±10%, Ceramic	1		
C223	ECQS1371JZ	370pF, 125WV, ±5%, Styrol	1		
C303	ECQS1471JZK	470pF, 125WV, ±5%, Styrol	1		
C313,314	ECKD2H471KB	470pF, 500WV, ±10%, Ceramic	2		
C405,406	ECKD2H681KB	680pF, 500WV, ±10%, Ceramic	2		
C315,316	ECQM05102KZ	0.001μF, 50WV, ±10%, Polyester	2		
C118,221	ECKD1H102PF	0.001μF, 50WV, +100% −0%, Ceramic	2		
C105	ECKD1H102MDA	0.001μF, 50WV, ±20%, Ceramic	1		
C311,312	ECQM05332KZ	0.0033μF, 50WV, ±10%, Polyester	2		
C409,410	ECQM05392KZ	0.0039μF 50WV, ±10%, Polyester	2		
C104,110,119, 204,205,212, 222,224,227, 230	ECKD1H103PF	0.01μF, 50WV, +100% −0%, Ceramic	10		
C216	ECKD1H103MD	0.01μF, 50WV, ±20%, Ceramic	1		
C701	ECKD1H103PF	0.01μF, 50WV, +100% −0%, Ceramic	1		
C407,408	ECQM05153KZ	0.015μF, 50WV, ±10%, Polyester	2		
C109,112,201, 202	ECKD1H223PF	0.022μF, 50WV +100% −0%, Ceramic	4		
C225	ECQM05223KZ	0.022μF, 50WV, ±10%, Polyester	1		
C210	ECQM05333KZ	0.033μF, 50WV, ±10%, Polyester	1		
C306,307	ECQM05393KZ	0.039μF, 50WV, ±10%, Polyester	2		
C301,501,502, 523,524	ECQM05473KZ	0.047μF, 50WV, ±10%, Polyester	5		
C511,512	ECQM05563KZ	0.056μF, 50WV, ±10%, Polyester	2		
C509,510	ECQM05334KZ	0.33μF, 50WV, ±10%, Polyester	2		
C519,520	ECQM05474KZ	0.47μF, 50WV, ±10%, Polyester	2		
C226,229	ECEA50MR15R	0.15μF, 50WV, Electrolytic	2		
C304,317,318	ECEA50MR22R	0.22μF, 50WV, Electrolytic	3		
C211, 305	ECEA50MR47R	0.47μF 50WV, Electrolytic	2		
C203,208	ECEA50V1L	1μF 50WV, Electrolytic	2		
C213,309,413, 414,503,504	ECEA50M1R	1μF, 50WV, Electrolytic	6		

Ref. No.	Part No.	Part Name & Description	Per Set		Remarks
C218, 219	ECEA25V3R3L	3.3μF, 25WV, Electrolytic	2		
C401, 402	ECEA25M4R7R	4.7μF, 25WV, Electrolytic	2		
C515,516,517, 518	ECEA25Z4R7	4.7μF, 25WV, Electrolytic	4		
C703	ECEA50V10L	10μF, 50WV, Electrolytic	1		
C217	ECEA16V10L	10μF, 16WV, Electrolytic	1		
C708	ECEA16V33L	33μF, 16WV, Electrolytic	1		
C411,412,505, 506	ECEA6V47L	47μF, 6.3WV, Electrolytic	4		
C308	ECEA16V47L	47μF, 16WV, Electrolytic	1		
C508	ECEA10V100V	100μF, 10WV, Electrolytic	1		
C709	ECEA16V100V	100μF, 16WV, Electrolytic	1		
C514	ECEA25V100V	100μF, 25WV, Electrolytic	1		
C214	ECEA6V220V	220μF, 6.3WV, Electrolytic	1		
C206,302	ECEA16V220V	220μF, 16WV, Electrolytic	2		
C521,522	ECEA25V220V	220μF, 25WV, Electrolytic	2		
C707,710	ECEA35V220V	220μF, 35WV, Electrolytic	2		
C702	ECEA50V330V	330μF, 50WV, Electrolytic	1		
C704,705	ECET25R332SU	3300μF, 25WV, Electrolytic	2		○
		VARIABLE CAPACITORS			
CV101~ 103 201, 202 (CT101~ 103 201, 202)	ECV5MD34X67G	Tuning Gang, FM & AM (with Trimmer)	1		
		COMPONENT COMBINATIONS			
Z701,702	RXAF103P22HD	0.01μF (X2), 500WV, Hum Cancel	2		
		FUSES and LAMPS			
F1,2	XBAS1A2501	2.5A Fuse, Circuit Protection	2		SAFETY
F3	XBA1F15NU100	1.5A Fuse, Power Source	1		○ SAFETY
PL1,2	XAMR54T	Lamp, Dial (12.6V, 0.38A)	2		SAFETY
PL3	**XAM13T300**	Lamp, Stereo Ind. (3V, 40mA)	1		
		METER			
	SSM77	Meter, FM & AM Signal	1		○
		SWITCHES			
S1	ESB704T	Switch, Power Source	1		○ SAFETY
S2,3	SSH219S	Switch, Loudness & Tape Monitor	1		○
S4	SSR57	Switch, Selector	1		○
		CABINET and CHASSIS PARTS			
1	SBC147	Button, Power Switch	1		○
2	SBN589	Knob, Bass, Treble, Balance, Volume & Selector	5		○
3	SBC149	Button, Loudness & Tape Switch	2		○
4	SBN587	Knob, Tuning	1		○
5	SGW6910	Panel, Front	1		○
6	XTN3+8B	Screw, Panel & Fuse Cover M'tg.	3		

www.hifiengine.com

Ref. No.	Part No.	Part Name & Description	Per Set		Remarks
7	SDE223	Dial Plate, Plastic	1	○	
8	SGXA39	Sleeve, Push Switches Button	1		
9	SMM3	Pin, Meter M'tg.	2	○	
10	RDY34	Shaft, Pulley	4		
11	RDR20	Pulley, Dial Cord	4		
12	RNW150-2	Washer, Pulley Lock	4		
13	SHR9265	Cover, Dial Light	2	○	
14	SJJ55	Jack, Headphones	1		
15	SKD2510	Scale, Dial	1	○	
16	SDPA8	Pointer, Dial	1		
17	SHPA4	Paper, Pointer Slide	1		
18	SHG1339	Rubber Bushing	2		
19	RDY2-1	Shaft, Dial Cord	1		
20	SDH321	Plate, Dial Light Reflection	1	○	
21	SJF109-2	Holder, Dial Lamp	2	○	
22	SJS5611	Connector, Printed Circuit Board	1		
23	SHG1277	Bracket, Stereo Indicator Lamp	1		
24	SDZ051-1	Cord, Dial (76-7/8", 195cm)	1roll		
25	XSHS3A6S	Screw, Pulley Shaft Ass'y M'tg.	1		
26	SDX751S	Flywheel, Tuning	1		
	XXAS3K5S	Screw, Flywheel M'tg.	2		
27	XNS9	Nut, Tuning Shaft & Headphones Jack	2		
	XWV9	Spring Washer, Tuning Shaft	1		
28	SDT8005	Shaft, Tuning Ass'y	1	○	
29	XTV3+8C	Screw, Metal Fitting M'tg.	2		
30	XTW3+10E	Screw, Bottom Board M'tg.	6		
31	SKL119	Foot, Set	4		
32	XRP3X12	Rivet, Foot M'tg.	4		
33	SYU61	Bottom Board	1	○	
34	SDD47-1	Drum, Dial Cord	1		
35	SDSA4121	Spring, Dial Cord	1		
36	SMA207	Holder, AM Antenna Coil	1		
37	SMA205	Holder, AM Antenna Coil	1		
38	SHR401-1	Lock Pin, Input Terminal M'tg.	2		
39	SJF4407	Terminal, Speaker & Fuse Holder	1	○	
40	SJFA3806-1	Terminal, PHONO, AUX & Tape Deck	1		
41	SJS9205	Socket, AC Outlet	1		SAFETY
42	SGP310A	Rear Panel	1	○	
43	XWG4FZ	Washer, Cabinet Screw	4		
44	XTB4+12FFZ	Screw, Cabinet M'tg.	4		
45	SKA8410	Cabinet	1	○	
46	SMA211	Holder, Coaxal FM Antenna	1	○	
47	SJF4303	Terminal, Ext. FM AM Antenna	1		
48	SUV337	Cover, Circuit Protection Fuse	1	○	
49	**RJA10A**	AC Cord	1		SAFETY
50	RHR111	Bushing, AC Cord	1		
51	SHG605	Rubber Cushion, Meter	2		
	SMX111	Insulator Plate, Power IC	2		
52	SUM5	Bracket, Dial Scale	1	○	
		ACCESSORIES			
A1	SSA251	Cord, 75Ω FM Antenna	1		
A2	XBAS1A2501	2.5A Fuse, Circuit Protection	2		SAFETY

Ref. No.	Part No.	Part Name & Description	Per Set		Remarks
		PACKINGS			
P1	SPPA23	Soft Cover	1		
P2	SPP163	Bag, Set	1		
P3	SPS331	Pad, Left & Right Side	2	○	
P4 [M]	SPG657	Carton Box (Only Set for America [M])	1	○	
P4 [MC]	SPG657-1	Carton Box (Only Set for Canada [MC])	1	○	
P5 [M]	SQF1167	Printed Matter (Only Set for America [M])	1	○	
P5 [MC]	SQF1169	Printed Matter (Only Set for Canada [MC])	1	○	

Printed in Japan
76.03-3500 A

www.hifiengine.com