ORDER NO. SD7804-1330

Service Manual

SA-600

FM/AM STEREO RECEIVER

SA-600

(M), (MC)

- The model SA-600 (M) is available in America only.
- The model SA-600 (MC) is available in Canada only.

Simulated wood cabinet

TECHNICAL SPECIFICATIONS (Specifications are subject to change without notice for further improvement.)

POWER AMPLIFIER SECTION

Rated minimum sine wave RMS power output
20Hz ~ 20kHz
both channels driven
0.04% total harmonic distortion
70W per channel (8 ohms)
80W per channel (4 ohms)

1kHz continuous power output	
both channels driven	
0.04% total harmonic distortion	77W per channel (8 ohms)
	95W per channel (4 ohms)
Total harmonic distortion at	
rated power	0.04% (20Hz ~ 20kHz, 8 ohms, 4 ohms)
half power	0.025% (20Hz ~ 20kHz, 8 ohms)
	0.008% (1kHz, 8 ohms)
Intermodulation distortion	0.04%
Residual hum and noise	0.6mV
Damping factor	50 (8 ohms), 25 (4 ohms)
Load impedance MAIN or REMOTE	4 ~ 16 ohms
MAIN + REMOTE	8 ~ 16 ohms

PREAMPLIFIER SECTION

Input sensitivity and impedance	
PHONO	2.5mV, 47 kilohms
AUX	150mV, 33 kilohms
PLAYBACK (TAPE 1, 2)	150mV, 33 kilohms
PHONO maximum input voltage (1kHz, RMS)	150mV
S/N (IHF, A)	
PHONO	78dB
AUX	95dB
Frequency response	
PHONO	RIAA standard curve ±0.2dB
AUX	20Hz ~ 20kHz, ±0.5dB
	10Hz ~ 40kHz, −1dB
Tone controls	
BASS	50Hz, +10dB ~ −10dB
TREBLE	10kHz, +10dB ~ −10dB
Low filter	100Hz, −6dB/oct.
High filter	7kHz, −6dB/oct.
Loudness control (−30 dB)	50Hz, +9dB
Output voltage	
REC OUT (TAPE 1, 2)	150mV
Acoustic controls (Tone controls "0" position)	
LOW BOOST	100Hz, +6dB
HIGH BOOST	10kHz, +6dB

FM TUNER SECTION

Frequency range	88 ~ 108MHz
Sensitivity	10.8dBf (1.9μV IHF '58)
50 dB quieting sensitivity	
MONO	13.7dBf, (2.7μV IHF '58)
STEREO	37.2dBf, (39.7μV IHF '58)
Total harmonic distortion	
100Hz	0.15% (MONO), 0.35% (STEREO)
1kHz	0.15% (MONO), 0.3% (STEREO)
6kHz	0.3% (MONO), 0.4% (STEREO)
S/N	75dB (MONO), 70dB (STEREO)
Frequency response	20Hz ~ 15kHz, +1dB −2dB
Alternate channel selectivity	70dB
Capture ratio	1.2dB
Image rejection at 98MHz	70dB
IF rejection at 98MHz	90dB
Spurious response rejection at 98MHz	80dB
AM suppression	55dB
Stereo separation	45dB (1kHz), 35dB (10kHz)
Leak carrier	−40dB (19kHz), −50dB (38kHz)
Antenna terminals	300Ω, 75Ω

AM TUNER SECTION

Frequency range	525 ~ 1605kHz
Sensitivity	30μV, 300μV/m
Selectivity	35dB
Image rejection at 1000kHz	50dB
IF rejection at 1000kHz	45dB

GENERAL

Power consumption	450VA, 360W
Power supply	AC 120V, 60Hz
Dimensions (W x H x D)	486 x 157 x 329 mm (19-1/8" x 6-3/16" x 12-15/16")
Weight	12.6kg (27.8 lb.)

Weights and dimensions shown are approximate.

Technics by Panasonic

Panasonic Company
Division of Matsushita Electric
Corporation of America
One Panasonic Way, Secaucus,
New Jersey 07094

Panasonic Hawaii, Inc.
320 Waiakamilo Road, Honolulu,
Hawaii 96817

Matsushita Electric of Canada Ltd.
40 Ronson Drive, Rexdale,
Ontario, Canada M9W 1B5

■ LOCATION OF CONTROLS

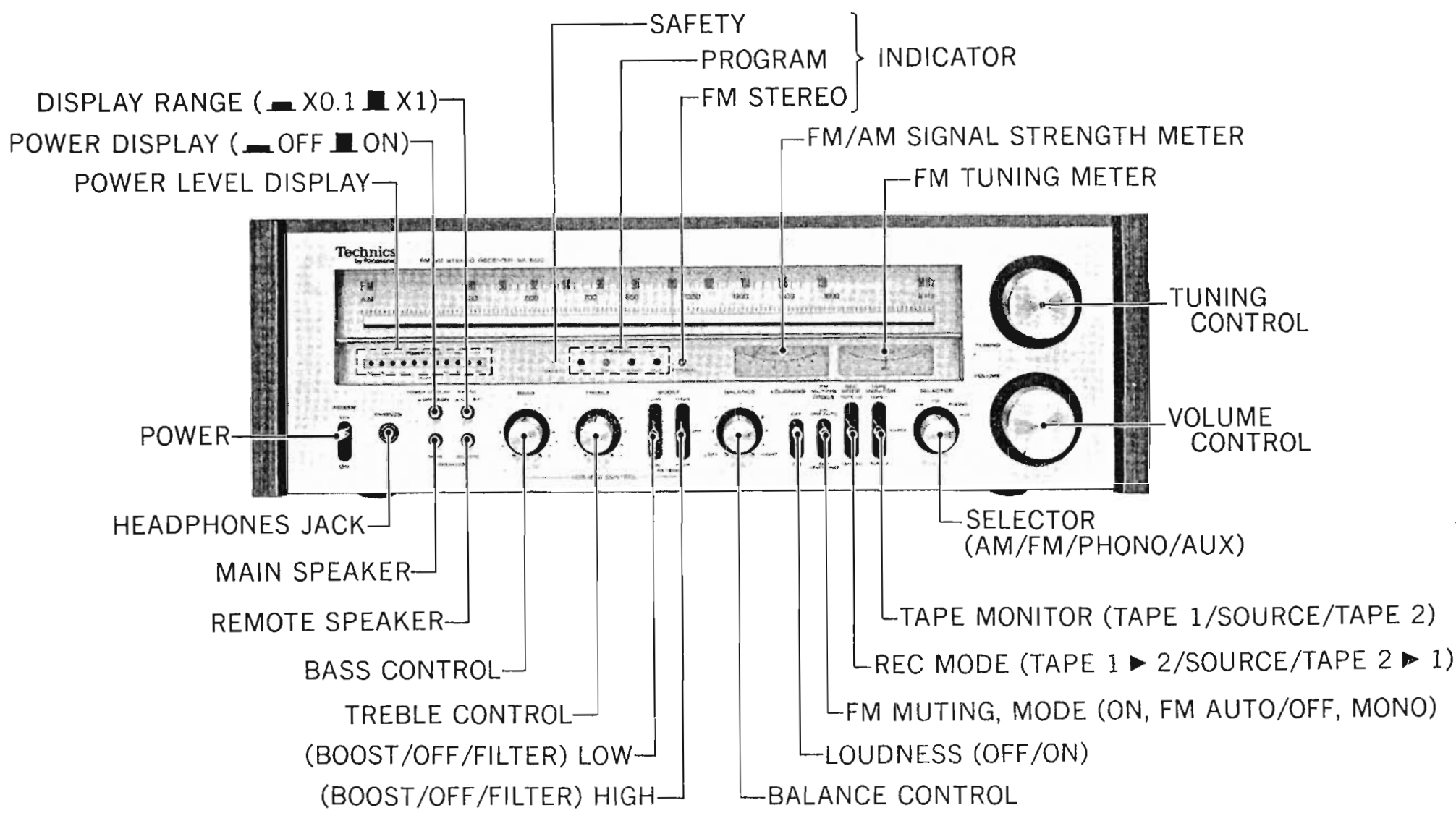

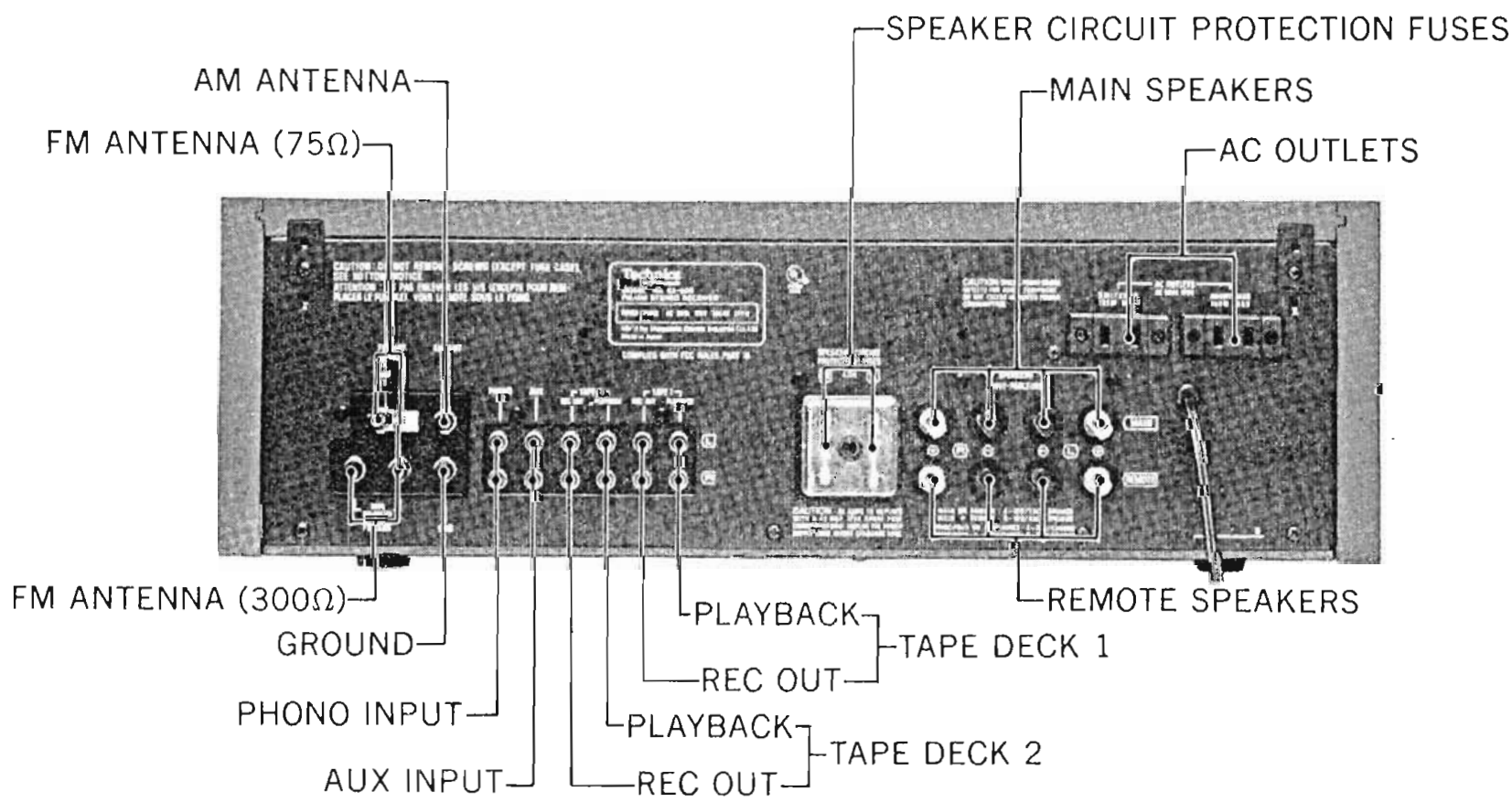

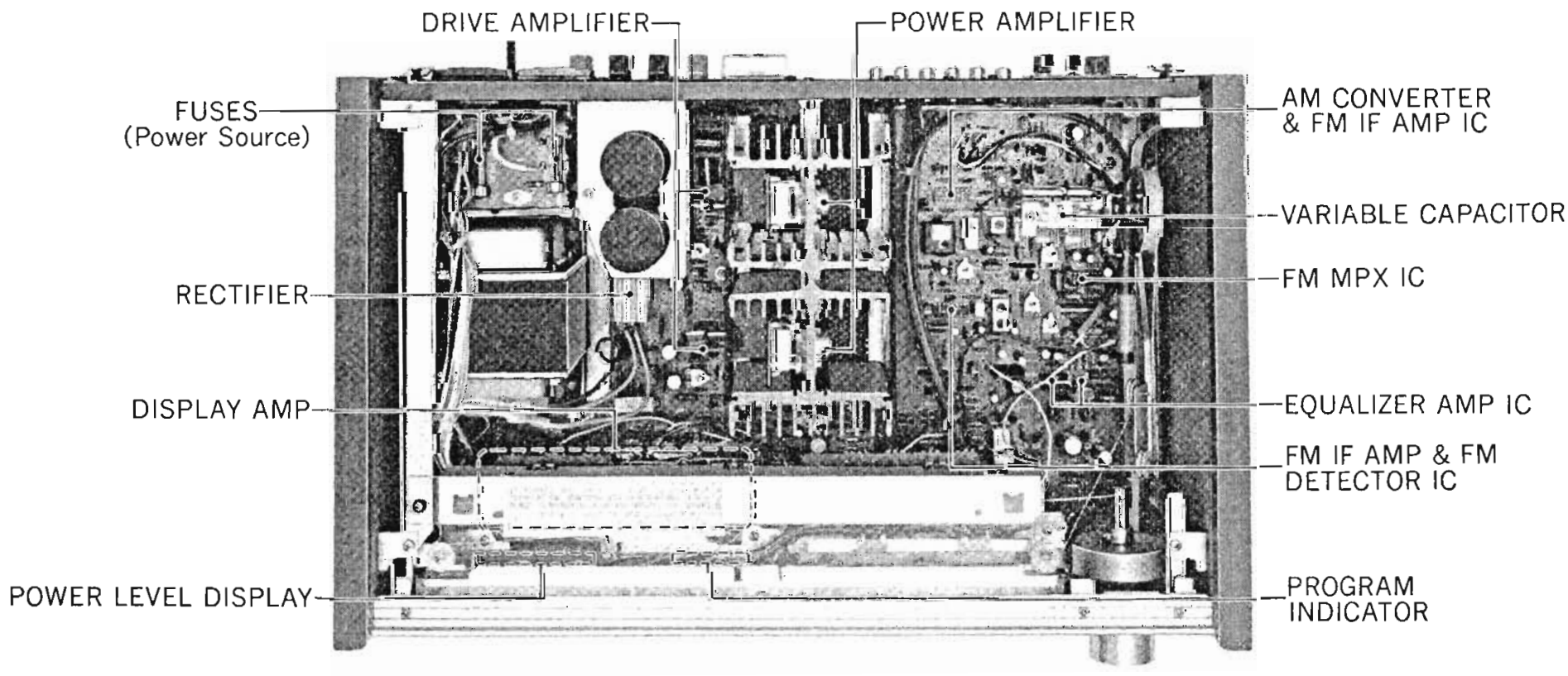

■ **NOTE** The unit is provided with the speaker circuit protection fuses at the right and left channels respectively. The fuse is to prevent the power transistor from destruction, should the speaker terminals be short-circuited. Accordingly, if the unit fails to function upon completion of the speaker connections, check the speaker circuit protection fuses first of all for possible blowing.

■ HOW TO REMOVE TOP BOARD AND SIDE BOARDS

1. Loosen the two screws (①and②in fig. 1), and lower the fittings in the direction shown by the arrows in figure 1.
2. As shown in figure 2, slide the top board toward the rear, and remove it from the grooves in the side boards.
3. To remove the side boards, first remove the top board, and then remove the four screws (③~⑥ in fig. 3).
   The fittings of the chassis and side boards can be separated by forcefully pulling the side boards toward the front of the unit, as shown in figure (3, Ⓐ).
4. The side boards can then be removed from the chassis by pulling them outward, as shown in figure (3, Ⓑ).
5. The top board and side boards can be in stalled by following the above steps in reverse.

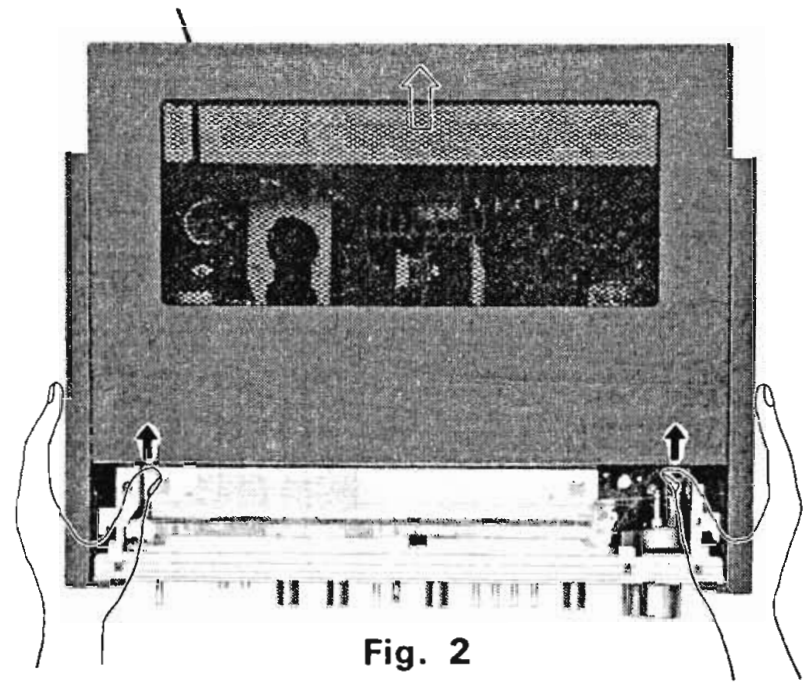

Fig. 2

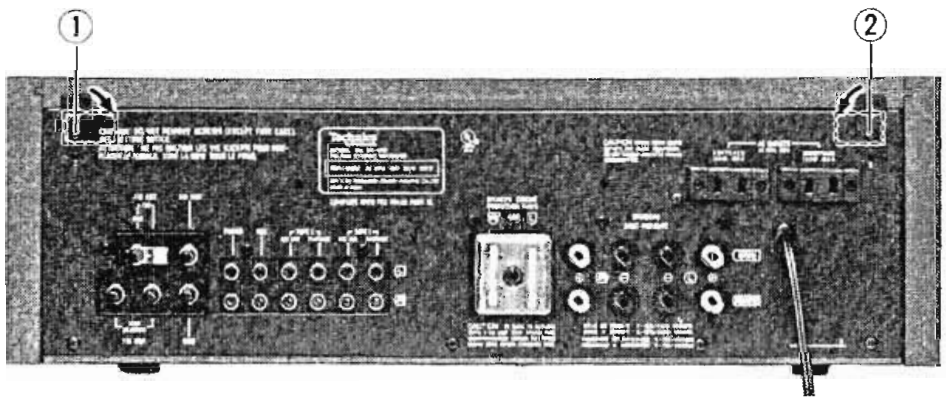

Fig. 1

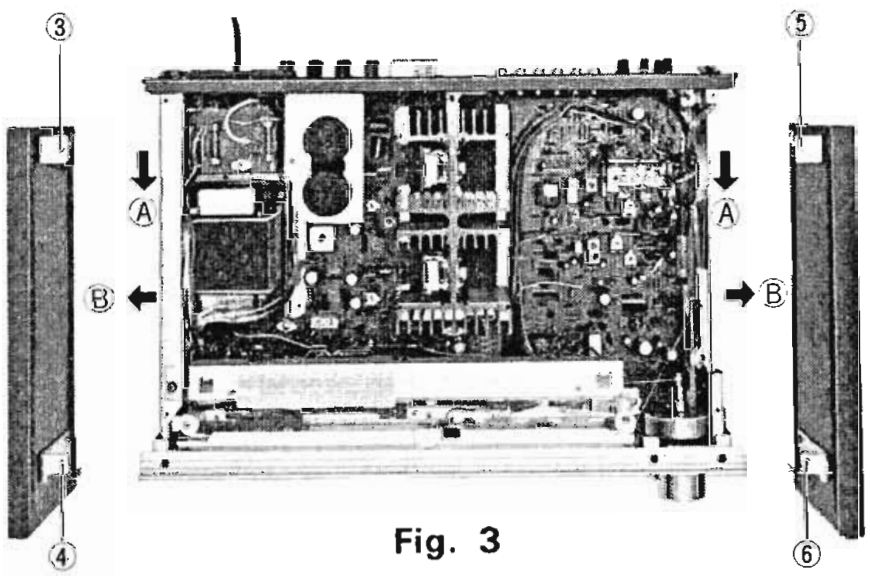

Fig. 3

■ ALIGNMENT POINTS

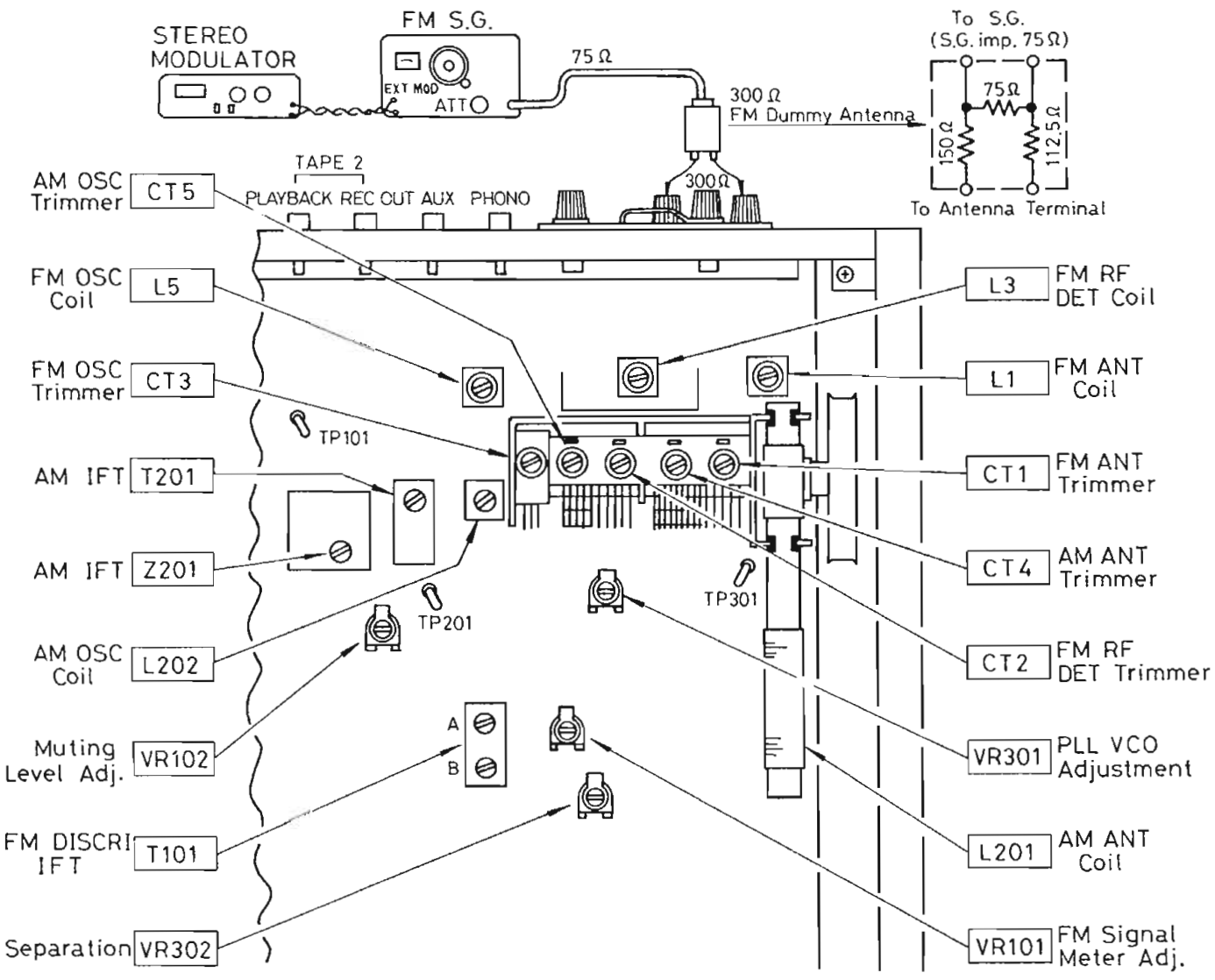

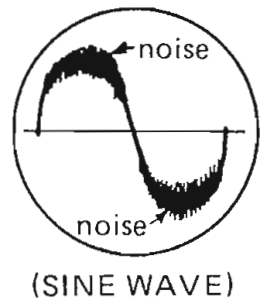

Fig. 4

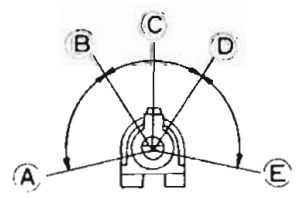

VR301

A – B, D – E: Stereo OFF Position.
B – D: Stereo ON Position (indicator lighting).
C: Adjust Point of Pilot Circuit.

Fig. 5

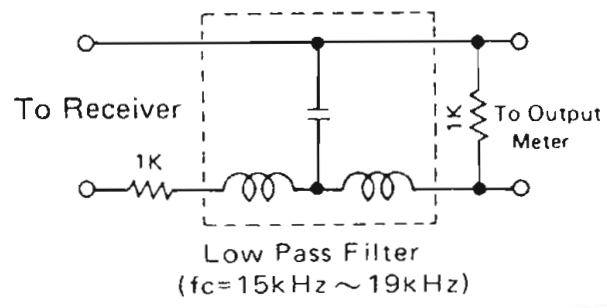

Fig. 6

■ ALIGNMENT INSTRUCTIONS ------ FM/AM Tuner Circuitry

Notes:
1. Loudness switch ····· OFF
2. Band selector switch ····· AM/FM (FM, RF FM-IF)
3. FM muting/mode switch ·····OFF/FM MONO
4. Speaker switch ·····ON
5. Tape monitor switch ····· SOURCE
6. Filter switch ····· OFF
7. Maintain line voltage at 120 volts.
8. Output of signal generator should be no higher than necessary to obtain an output reading.

	SIGNAL GENERATOR CONNECTION	SIGNAL GENERATOR FREQUENCY	DIAL SETTING	INDICATOR (AC VTVM or SCOPE) (DISTORTION METER)	ADJUSTMENT POINTS	REMARKS
	AM ALIGNMENT					
1	High side through 0.001 μF to **AM** antenna trimmer terminal. Common to chassis.	455kHz (30%Mod. with 400Hz)	Point of non-inter ference	Connect VTVM or scope to **TP201.** through 0.1 μF	T201 (1st IFT) Z201 (2nd IFT)	●Adjust for maximum output.
2	Fashion loop of several turns of wire and rad ate signal into loop of receiver	600kHz (30%Mod. with 400Hz)	600kHz	Connect VTVM or scope to speaker terminals of receiver.	L202 (OSC Coil) L201 (ANT Coil)	●Adjust for maximum output. Adjust L201 by moving coil bobbin along ferrite core.
3	Fashion loop of several turns of wire and radiate signal into loop of receiver	1500kHz (30%Mod.) with 400Hz)	1500kHz	Connect VTVM or scope to speaker terminals of receiver.	CT5 (OSC Trimmer) CT4 (ANT Trimmer)	●Adjust for maximum output. ●Repeat steps (2) and (3).
	FM-IF ALIGNMENT					
4		No Signal	Point of non-inter ference.	Tuning meter of set.	T101 (DISCRI IFT) (A) Orange Core	●FM muting/mode switch to ON/FM AUTO. ●Adjust for center position of tuning meter.
	FM-RF ALIGNMENT					
5	Connect to FM 300Ω antenna terminal through FM dummy antenna.	90MHz (100%Mod. with 400Hz)	90MHz	Connect scope to speaker terminals of receiver.	L5 (OSC Coil) L3 (RF-DET Coil) L1 (ANT Coil)	●FM muting/mode switch to OFF/FM MONO. ●Adjust for maximum amplitude and symmet-rical curve. (Refer to fig. 4).
6	Connect to FM 300Ω antenna terminal through FM dummy antenna.	106MHz (100%Mod. with 400Hz)	106MHz	Connect scope to speaker terminals of receiver.	CT3 (OSC Trimmer) CT2 (RF DET Trimmer) CT1 (ANT Trimmer)	●Adjust for maximum am-plitude and symmetrical curve. ●Repeat steps (5) and (6).
	FM MONO DISTORTION ALIGNMENT					
7	Connect to FM 300Ω antenna terminal through FM dummy antenna. Apply 60 dB to set.	100MHz (100%Mod. with 400Hz)	100MHz	Connect distortion meter to speaker terminals of receiver.	T101 (DISCRI IFT) (B) Green Core	●Adjust for minimum distortion of left output. ●Repeat steps (4) and (7).
	FM MUTING LEVEL ALIGNMENT					
8	Connect to FM 300Ω antenna terminal through FM dummy antenna. Apply 16dB(6.3 μV)to set.	100MHz (100%Mod. with 400Hz)	100MHz	Connect VTVM or scope to speaker terminals.	VR102	●FM muting/mode switch to "ON/FM AUTO. ●Adjust so that output can be obtained.
	FM SIGNAL METER ALIGNMENT					
9	**1** Apply 100MHz FM signal of 100dB (400Hz 30% modulation) to FM 300Ω antenna terminal through FM dummy antenna. **2** Tuning at 100MHz. **3** Adjust **VR101** for about 4.7 point of signal meter indication.					
	FM MPX PILOT ALIGNMENT					
10	Using a frequency counter: **1** 100MHz Non-modulated mono signal applied to set. (Apply 60dB) **2** FM muting/mode switch to "ON/FM AUTO" **3** Connect frequency counter to **TP301** through resistor (100kΩ) **4** Adjust **VR301** to 19kHz, ±30Hz.			Using alternate system: **1** Apply stereo signal from generator or stereo station to receiver. **2** Adjust **VR301** until stereo indicator lights up. Cement arm of **VR301** as shown in fig. 5.		

Notes:
1. Stereo modulator ····· ● Connect stereo modulator output to EXT MOD terminal of signal generator. ● Pilot signal modulation to "10%"
2. FM signal generator ····· ● Frequency approximatery 100MHz/Output level to "72dB (IHF)" ● Modulation mode to "FM"
3. Selector switch to "FM"
4. FM muting/mode switch to "ON/FM AUTO"

	FM SIGNAL GENERATOR CONNECTION	STEREO MODULATOR MODE & MOD. RATE	INDICATOR (AC VTVM)	ADJUSTMENT POINT	REMARKS
	FM STEREO SEPARATION ALIGNMENT				
11	FM 300Ω antenna terminals through FM dummy antenna.	(1kHz 30% Modulation) MODE **L** (and R) Pilot signal to "ON"	Connect VTVM to speaker terminals through low pass filter. (Refer to fig. 6)	VR302	●Tuning at 100MHz. ●Make adjustment so that, when the antenna input is subjected to **L** modulation (or **R** modulation), **R** channel output (or **L** channel output) becomes minimum.

■ MAIN AMPLIFIER & POWER SUPPLY CIRCUIT BOARD

Earth (Ground) Lines

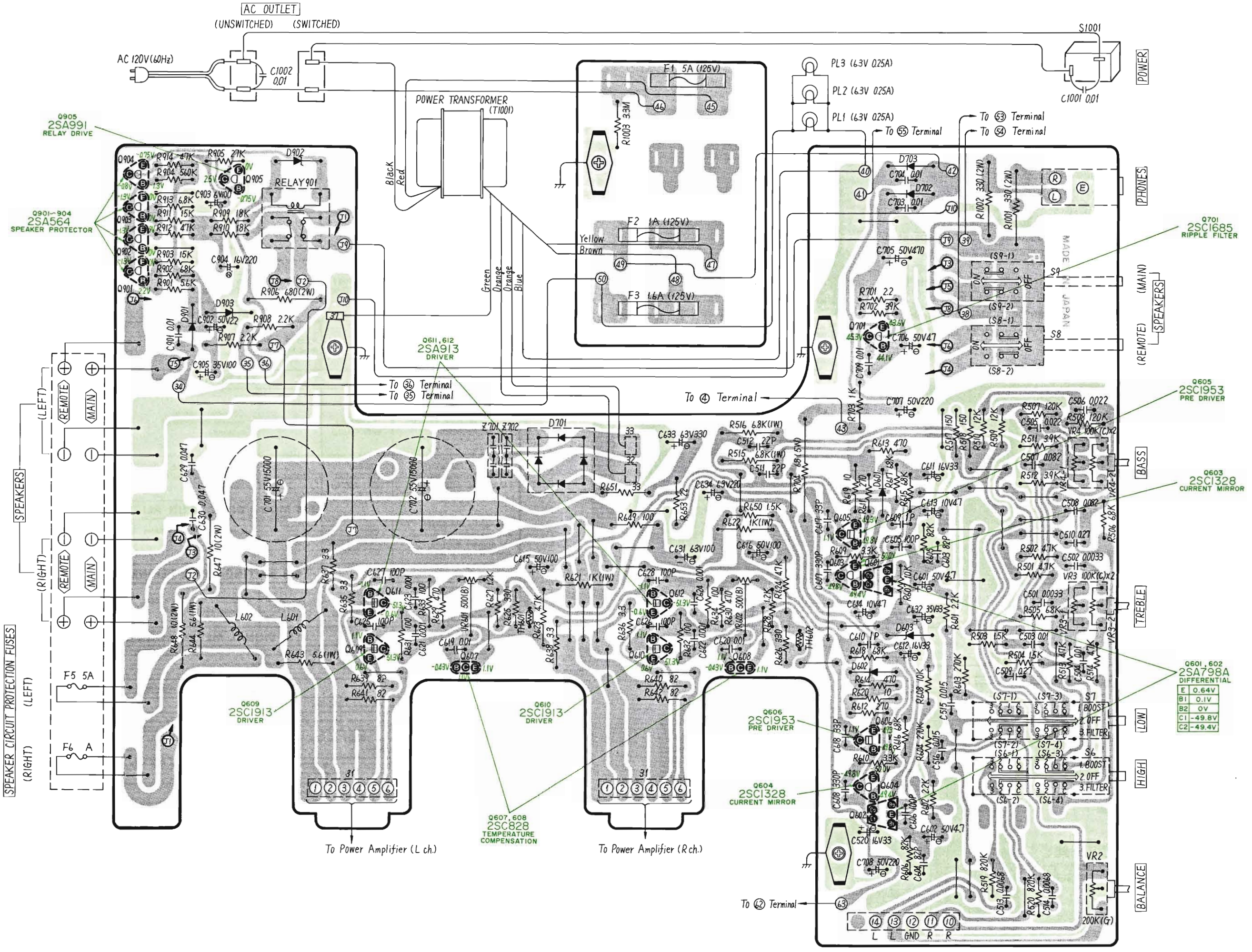

■ FM/AM TUNER AND EQUALIZER CIRCUIT BOARD

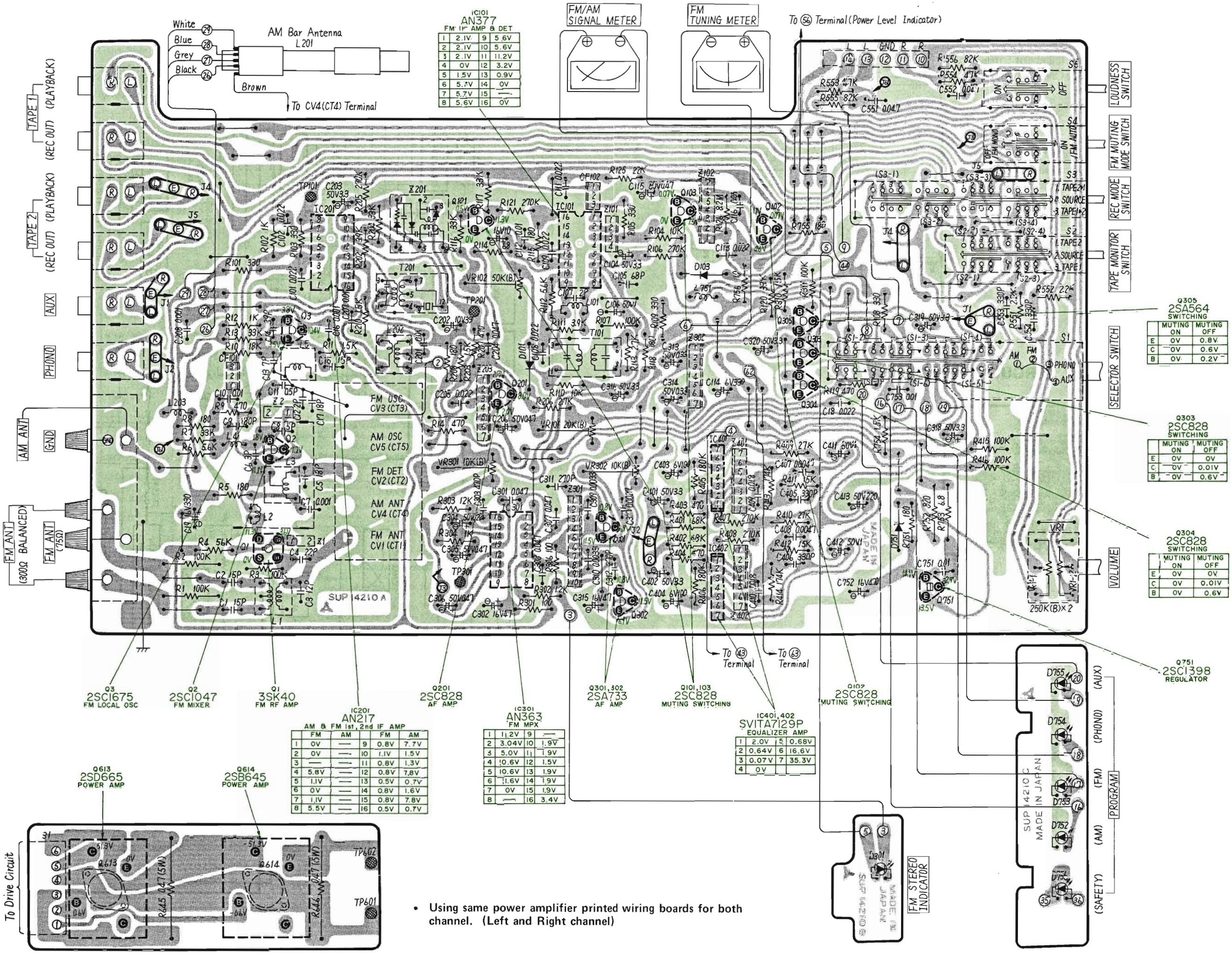

	MUTING ON	MUTING OFF
E	0V	0.8V
C	0V	0.6V
B	0V	0.2V

	MUTING ON	MUTING OFF
E	0V	0V
C	0V	0.01V
B	0V	0.6V

	MUTING ON	MUTING OFF
E	0V	0V
C	0V	0.01V
B	0V	0.6V

1	2.1V	9	5.6V
2	2.1V	10	5.6V
3	2.1V	11	11.2V
4	0V	12	3.2V
5	1.5V	13	0.9V
6	5.7V	14	0V
7	5.7V	15	—
8	5.6V	16	0V

	FM	AM		FM	AM
1	0V	—	9	0.8V	7.7V
2	0V	—	10	1.1V	1.5V
3	—	—	11	0.8V	1.3V
4	5.8V	—	12	0.8V	7.8V
5	1.1V	—	13	0.5V	0.7V
6	0V	—	14	0.8V	1.6V
7	1.1V	—	15	0.8V	7.8V
8	5.5V	—	16	0.5V	0.7V

1	11.2V	9	—
2	3.04V	10	1.9V
3	5.0V	11	1.9V
4	10.6V	12	1.5V
5	10.6V	13	1.9V
6	11.6V	14	1.9V
7	0V	15	1.9V
8	—	16	3.4V

1	2.0V	5	0.68V
2	0.64V	6	16.6V
3	0.07V	7	35.3V
4	0V		

- Using same power amplifier printed wiring boards for both channel. (Left and Right channel)

■ ALIGNMENT INSTRUCTIONS ... Main Amplifier Circuitry

- Main amplifier (ICQ) alignment.

1. The "ICQ" adjustment should be started about 5 minutes. After setting the power switch to the ON position.
2. Left channel
   * Connect DC voltmeter between TP601 and TP602.
   * Adjust VR602 to 8 mV on DC voltmeter indication.
3. Right channel
   * Connect DC voltmeter between TP601 and TP602.
   * Adjust VR601 to 8mV on DC voltmeter indication.

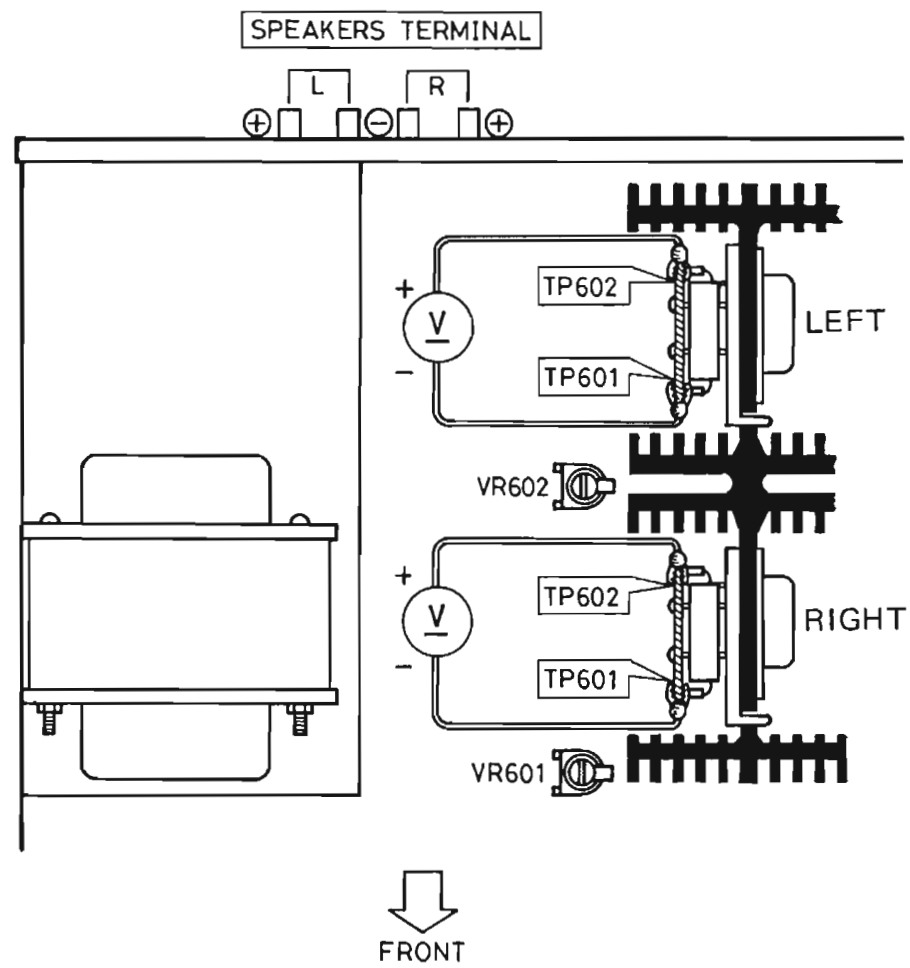

■ POWER LEVEL DISPLAY CIRCUIT BOARD

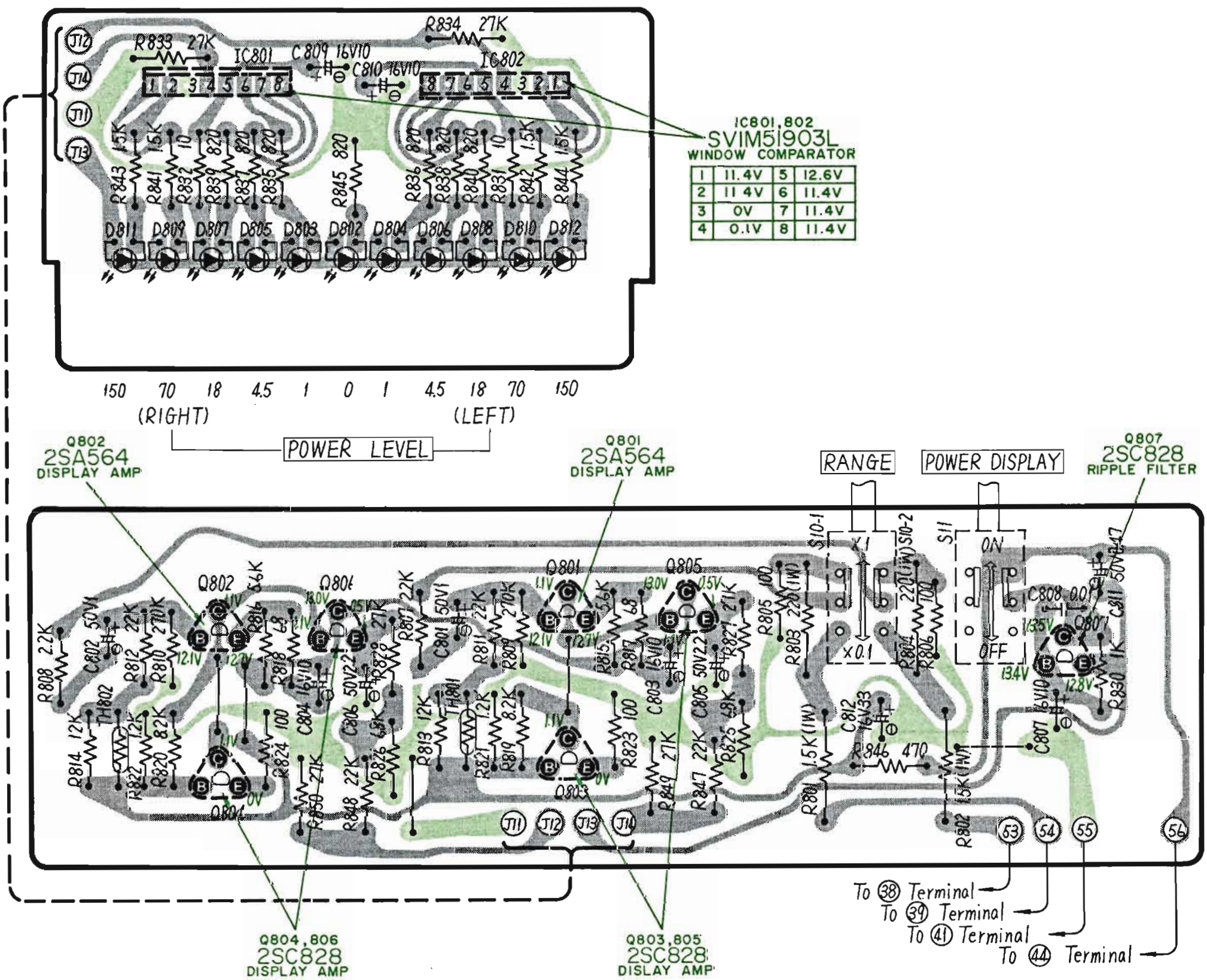

■ BLOCK DIAGRAM

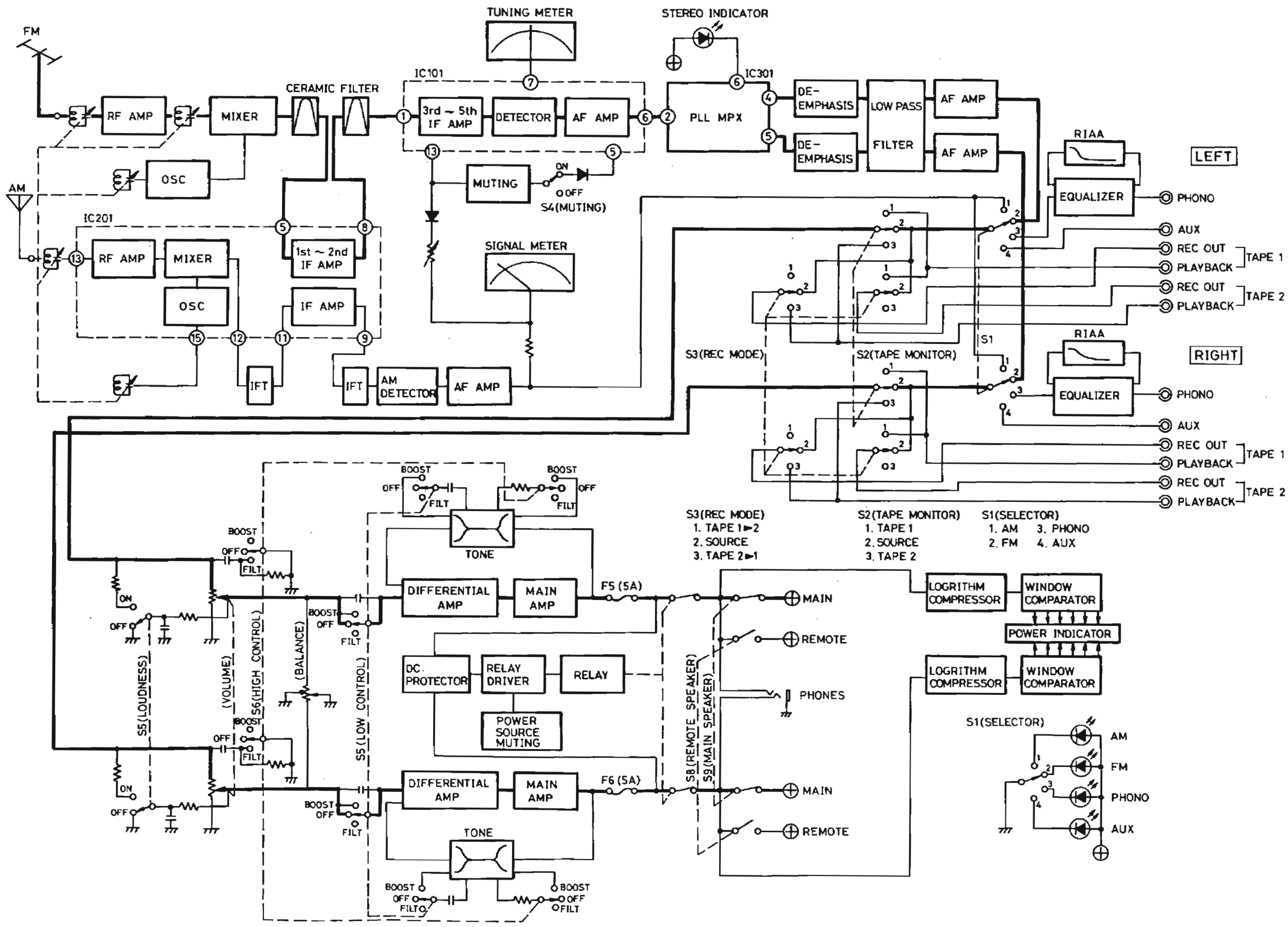

■ REPLACEMENT PARTS LIST ... Electric Parts

Important Safety Notice

Components identified by shaded area have special characteristics important for safety. When replacing any of these components use only manufacturer's specified parts.

NOTE: Part numbers are indicated on most mechanical parts.
Please use this part number for parts orders.

Ref. No.	Part No.	Part Name & Description	Per Set		Remarks
		INTEGRATED CIRCUITS			
IC101	AN377	IC, FM IF Amplifier & FM Detecotr	1		
IC201	AN217-BB	IC, FM IF Amplifier & AM Comverter	1		
IC301	AN363	IC, FM Multiplex	1		
IC401, 402	SVITA7129P	IC, Equalizer Amplifier	2		
IC801, 802	SVIM51903L	IC, Power Display Window Comparator	2		O
		TRANSISTORS			
Q1	3SK40-M	Transistor, FM RF Amplifier [FET]	1		
Q2	**2SC1047-C**	Transistor, FM Mixer (Use in ranks C or D)	1		
Q3	2SC1675-L1	Transistor, FM Local Oscillator	1		
Q101, 102, 103, 201	**2SC1328-T**	Transistor, Muting Switch & AF Amplifier (Use in ranks S, T or U)	4		
Q301, 302	2SA733-P1	Transistor, AF Amplifier (Use in ranks P1 or P2)	2		
Q303, 304	**2SC1328-T**	Transistor, Muting Switching (Use in ranks S, T or U)	2		
Q305	**2SA666AI-R**	Transistor, Muting Switching (Use in ranks P, Q or R)	1		
Q601, 602	**2SA798A-G2**	Transistor, Differential Amplifier (Use in ranks F2 or G2)	2		
Q603, 604	**2SC1328-T**	Transistor, Carrent Mirror (Use in ranks S, T or U)	2		
Q605, 606	2SC1953-R	Transistor, Pre-Drive Amplifier (Use in ranks Q, R or S)	2		
Q607, 608	**2SC828A-R**	Transistor, Temperature Compensation (Use in ranks P, Q or R)	2		
Q609, 610	2SC1913A-Q	Transistor, Driver Amp. (Use in ranks P, Q or R) } Use pair ranks	2		
Q611, 612	2SA913A-Q	Transistor, Driver Amp. (Use in ranks P, Q or R) } Use pair ranks	2		
Q613 (X2)	2SD665-R	Transistor, Power Amp. (Use in ranks R or O) } Use pair ranks	2		O
Q614 (X2)	2SB645-R	Transistor, Power Amp. (Use in ranks R or O) } Use pair ranks	2		O
Q701	2SC1685-T	Transistor, Ripple Filter (Use in ranks S or T)	1		
Q751	**2SC1398-Q**	Transistor, Regulator (Use in ranks P, Q or R)	1		
Q801, 802	**2SA666AI-R**	Transistor, Display Amplifier (Use in ranks P, Q or R)	2		
Q803, 804, 805, 806, 807	**2SC1328-T**	Transistor, Display Amplifier & Ripple Filter (Use in ranks S, T or U)	5		
Q901, 902, 903, 904	**2SA666AI-R**	Transistor, Speaker Protection (Use in ranks P, Q or R)	4		
Q905	2SA991-F	Transistor, Relay Driver (Use in ranks E or F)	1		O
		DIODES			
D101	SVDKB262E	Diode, Meter Detector	1		
D103	MA150	Diode, Switching	1		
D301	LN25RP	Light Emitting Diode, Stereo Indicator	1		
D601, 602	MA27B	Diode, Current Mirror	2		
D603	SVDMZ324	Diode, 24V Zener	1		
D701	SVDS10VB20F	Rectifier	1		O
D702, 703	**SM112**	Rectifier	2		
D751	SVDMZ414	Diode, 14V Zener	1		
D752~D755	LN25RP	Light Emitting Diode, Program Indicator	4		
D756	LN35BP	Light Emitting Diode, Safety Indicator	1		
D802	LN36BP	Light Emitting Diode, Green	1		
D803 ~ D808	LN46YP	Light Emitting Diode, Orange	6		
D809 ~ D812	LN26RP	Light Emitting Diode, Red	4		
D901	**SM112**	Rectifier	1		
D902	SVDMZ424B	Diode, Relay Pulse Killer	1		
D903	SVDMZ330B	Diode, 30V Zener	1		

Ref. No.	Part No.	Part Name & Description	Per Set		Remarks
		COILS and TRANSFORMERS			
L1	SLA4P25	Coil, FM Antenna	1		
L2	**RLQY25S2**	Coil, Choke	1		
L3	SLD4P13	Coil, FM RF Detector	1		
L4	**RLQY15G5**	Coil, Choke	1		
L5	SL04P31	Coil, FM Local Oscillator	1		
L101	SLQX180-2	Coil, Choke	1		
L201	SLF2C11	Coil, AM Bar Antenna	1		
L202	SLO2C3-P	Coil, AM Local Oscillator	1		
L203	SLQX101-2D	Coil, Choke	1		
L601, 602	SLQY15G-3U	Coil, Power Amplifier Output	2		
L751	SLQX101-2D	Coil, Choke	1		
T101	SLI4D513-3	Transformer, FM IF Detector	1		
T201	SLI7D101-M	Transformer, AM IF	1		
T1001	SLT5Q75	Transformer, Power Source	1		O
		COMPONENT COMBINATIONS			
Z1	EXRP102Z223S	Component Combination, 22kΩ & 0.01μF	1		
Z2	EXRP103P102S	Component Combination, 1kΩ & 0.01μF	1		
Z101	EXF3SL04C	Component Combination, 0.01μF (X3)	1		
Z102	EXBH85006K	Component Combination, 10kΩ,22kΩ 33kΩ , 56kΩ, 320kΩ	1		
Z201	SLI9F101-Z	Component Combination, AM Detector	1		
Z203	EXBH85005K	Component Combination, 1.5kΩ, 3.3kΩ, 47kΩ, 56kΩ, 180kΩ	1		
Z301	EXBH88007K	Component Combination, 390Ω (X2), 10kΩ (X4), 1.5kΩ (X2)	1		
Z302	EXA6YD03C	Component Combination, 3.9kΩ (X2), 100kΩ (X2), 1500pF (X2)	1		
Z401, 402	EXA6SD01C	Component Combination, 100Ω, 330Ω, 68pF, 150pF, 680pF (X2)	2		
Z701, 702	EXRFS203ZS	Component Combination, 0.01μF (X2)	2		
		CERAMIC FILTERS			
CF101, 102	SVFE107MS8-A	Ceramic Filter, Red, 10.7MHz	each 2		
	SVFE107MS8-B	Ceramic Filter, Blue, 10.67MHz			
	SVFE107MS8-C	Ceramic Filter, Orange, 10.73MHz			
	SVFE107MS8-D	Ceramic Filter, Black, 10.64MHz			
	SVFE107MS8-E	Ceramic Filter, White, 10.76MHz			
	(Use pair ranks as same as CF101 and CF102.)				
		VARIABLE RESISTORS			
VR1	EWF2F25BF5S	Volume Control, 250kΩ (B)	1		O
VR2	EVH63F25G25S	Balance Control, 200kΩ (G)	1		O
VR3, 4	EWK32F25C15S	Bass & Treble Control, 100kΩ (C)	2		O
VR101	**EVLS3AA00B24**	Meter Adjustment, 20kΩ (B)	1		
VR102	**EVLS3AA00B54**	Muting Level Adjustment, 50kΩ (B)	1		
VR301	EVTS3MA00B14	PLL VCO Adjustment, 10kΩ (B)	1		
VR302	**EVLS3AA00B14**	Separation Adjustment, 10kΩ (B)	1		
VR601, 602	**EVLS3AA00B52**	Power Amp ICQ Adjustment, 500Ω (B)	2		
		VARIABLE CAPACITOR			
CV1 ~ CV5 (CT1 ~ CT5)	ECVC751K144A	Variable Capacitor, with Trimmer	1		
		LAMPS			
PL1, 2, 3	XAMR62S	Lamp, Dial (6.3V 0.25A)	3		
		FUSES			
F1	XBA1F50NU14	Fuse, 5A (125V), Primary	1		
F2	XBA1F10NU14	Fuse, 1A (125V), Secondary	1		
F3	XBA1F16NU14	Fuse, 1.6A (125V), Secondary	1		
F5, 6	XBAS1A5001	Fuse, 5A (125V), Speaker Circuit	2		
		RELAY			
RLY901	SSY19-1	Relay, Speaker Protection	1		
		SWITCHES			
S1	ESRM164F25E	Switch, Program Selector	1		
S2	SSL117	Switch, Tape Monitor	1		
S3	SSL115	Switch, Recording Mode	1		
S4, 5	SSL123	Switch, Fm muting/Mode & Loudness	2		
S6, 7	SSL119	Switch, High & Low Boost/Filter	2		O
S8, 9	SSH223S	Switch, Main & Remote Speakers	1		
S10, 11	SSH219S	Switch, Power Display Range	1		
S1001	SSL81	Switch, Power Source	1		

■ REPLACEMENT PARTS LIST ..... Electric Parts

NOTES:

1. Components identified by shaded area have special characteristic important for safety. When replacing any of these componesnts use only manufacturer's specified parts.
2. Part numbers are indicated on most mechanical parts. Please use this part number for parts orders.
3. Guide letters of Resistor and Capacitor indicate:

Resistors

ERD . . . . . Carbon
ERO . . . . . Metal film
ERG . . . . . Metal oxide
ERF . . . . . Non-flammable
ERX . . . . . Metal film
ERC . . . . . Solid

Capacitors

ECC . . . . . Ceramic
ECK . . . . . Ceramic
ECQM . . . Polyester
ECQP . . . . Polypropylene
ECE . . . . . Electrolytic
ECE [ ] N . . . Non-polar electrolytic
ECQU . . . . Polyester
ECQS . . . . Polystyrene

Ref. No.		Part No.
RESISTORS		
R1, 2		**ERD50TJ104**
R3		**ERD25TJ104**
R4		**ERD25TJ563**
R5		**ERD25TJ181**
R6		**ERD25TJ562**
R7		**ERD25TJ333**
R8		**ERD25TJ181**
R9		**ERD25TJ471**
R10		**ERD25TJ183**
R11		**ERD25TJ152**
R12		**ERD25TJ102**
R13		**ERD25TJ333**
R14		**ERD25TJ471**
R101		**ERD25TJ331**
R102		**ERD25TJ102**
R103		**ERD25TJ331**
R104		**ERD25TJ103**
R105		**ERD25TJ331**
R106		**ERD25TJ274**
R107		**ERD25TJ104**
R108, 109		**ERD25TJ331**
R110		**ERD25TJ103**
R111		**ERD25TJ392**
R112		**ERD25TJ562**
R113		**ERD25TJ272**
R114		**ERD25TJ680**
R115		**ERD25TJ181**
R116, 117		**ERD25TJ333**
R118		**ERD25TJ181**
R119		**ERD25TJ471**
R120		**ERD25TJ333**
R121		**ERD25TJ274**
R125		**ERD25TJ223**

Ref. No.		Part No.
R126		**ERC14GK825**
R202		**ERD25TJ392**
R203		**ERD25TJ152**
R204		**ERD25TJ333**
R205		**ERD25TJ274**
R206		**ERD25TJ272**
R207		**ERD25TJ471**
R208		**ERD25TJ181**
R210		**ERD25TJ152**
R301		**ERD25TJ101**
R302		**ERD25TJ122**
R303		**ERD25TJ123**
R304		**ERD25TJ102**
R306		**ERD25TJ101**
R310		**ERD25TJ153**
R311		**ERD25TJ104**
R401, 402		ERO25CKG6802
R403, 404		**ERD25TJ471**
R405, 406		ERO25CKG1803
R407, 408		ERO25CKG2703
R409, 410		**ERD25TJ273**
R411, 412		ERO25CKF1502
R413, 414		ERO25CKF1743
R415, 416		**ERD25TJ104**
R501, 502		**ERD25TJ472**
R503, 504		**ERD25TJ152**
R505, 506		**ERD25TJ682**
R507, 508		**ERD25TJ124**
R509, 510		**ERD25TJ123**
R511, 512		**ERD25TJ392**
R513, 514		**ERD25TJ332**
R515, 516		**ERG1ANJ682**
R517, 518		**ERD14FJ151**
R519, 520		**ERD25TJ824**
R551, 552		**ERD25TJ222**

Ref. No.		Part No.
R553, 554		**ERD25TJ473**
R555, 556		**ERD25TJ823**
R601, 602		**ERD25TJ222**
R603, 604		**ERD25TJ274**
R605, 606		**ERD25TJ823**
R607, 608		**ERD25TJ103**
R609, 610		**ERD25TJ332**
R611, 612		**ERD25TJ271**
R613, 614		**ERD25TJ471**
R615, 616		**ERD25TJ683**
R617, 618		**ERD25TJ683**
R619, 620		**ERD14FJ100**
R621, 622		**ERG1ANJ102**
R623, 624		ERD12FJ472
R625, 626		**ERD25TJ331**
R627, 628		**ERD25TJ122**
R629, 630		**ERD25TJ471**
R631, 632		**ERD14FJ101**
R633, 634		**ERD14FJ101**
R635, 636		**ERD14FJ3R3**
R637, 638		**ERD14FJ3R3**
R639, 640		**ERD14FJ820**
R641, 642		**ERD14FJ820**
R643, 644		**ERX1ANJ5R6**
R645, 646		**ERF5AKR47**
R647, 648		**ERX2ANJ100**
R649		**ERD14FJ101**
R650		**ERD14FJ152**
R651		**ERD14FJ330**
R653		**ERD14FJ220**
R701		**ERD18FJ2R2**
R702		**ERD25TJ393**
R703		**ERD14FJ102**
R704		**ERF5SJ680**

Ref. No.	Part No.
R751	**ERD25TJ181**
R752	**ERG1ANJ821**
R753	ERD12FJ6R8
R754	**ERD25TJ152**
R755	**ERD25TJ181**
R756	**ERD25TJ100**
R801, 802	**ERG1ANJ152**
R803, 804	**ERG1ANJ221**
R805, 806	**ERD25TJ101**
R807, 808	**ERD25TJ222**
R809, 810	**ERD25TJ274**
R811, 812	**ERD25TJ223**
R813, 814	**ERD25TJ123**
R815, 816	**ERD25TJ562**
R817, 818	**ERD25TJ680**
R819, 820	**ERD25TJ822**
R821, 822	**ERD25TJ122**
R823, 824	**ERD25TJ101**
R825, 826	**ERD25TJ683**
R827, 828	**ERD25TJ273**
R830	**ERD25TJ102**
R831, 832	**ERD25TJ100**
R833, 834	**ERD25TJ273**
R835, 836	**ERD25TJ821**
R837, 838	**ERD25TJ821**
R839, 840	**ERD25TJ821**
R841, 842	**ERD25TJ152**
R843, 844	**ERD25TJ152**
R845,	**ERD25TJ821**
R846	**ERD25TJ471**
R847, 848	**ERD25TJ223**
R849, 850	**ERD25TJ273**
R901	**ERD25TJ562**
R902	**ERD25TJ683**
R903	**ERD25TJ153**
R904	**ERD25TJ564**
R905	**ERD25TJ273**
R906	**ERG2ANJ681**
R907	ERD12FJ222
R908	**ERD14FJ222**
R909, 910	**ERD25TJ183**
R911	**ERD25TJ153**
R912	**ERD25TJ473**
R913	**ERD25TJ682**
R914	**ERD25TJ473**

Ref. No.	Part No.
R1001, 1002	**ERG2ANJ331**
R1003	**ERC12ZGK335**
THERMISTORS	
TH601, 602	RRT251
TH801, 802	ERTD2FHL103S
CAPACITORS	
C1, 2	ECCD1H150KC
C3	ECCD1H120KC
C4	ECCD1H220KC
C5	ECCD1H180KR
C6	ECCD1H030CC
C7	ECKD1H102MDA
C8	ECCD1H050CC
C9	ECCD1H181K
C10	ECKD1H103ZF
C11	ECCD1H0R5CC
C12	ECCD1H020CC
C13	ECCD1H070DC
C14	ECCD1H390KC
C15	ECCD1H150KC
C16	ECKD1H102ZF
C17	ECCD1H180KR
C18	ECKD1H223ZF
C19	**ECEA1CS331**
C101, 102	ECKD1H223ZF
C104	**ECEA2AS3R3**
C105	ECCD1H680K
C106	**ECEA2AS010**
C107	ECCD1H020CC
C108, 109	ECKD1H223ZF
C110	**ECEA1HS100**
C111	ECKD1H223ZF
C112	ECKD1H103ZF
C113	ECKD1H223ZF
C114	**ECEA1AS331**
C115	**ECEA2ASR47**
C116	ECKD1H103ZF
C201	ECKD1H103MD
C202	**ECEA1CS330**

Ref. No.	Part No.
C203	**ECEA2AS3R3**
C204	ECQM1H473KZ
C205	ECQM1H223KZ
C206	**ECEA2ASR47**
C207	ECKD1H103ZF
C208	ECKD1H102ZF
C301	ECQM1H473KZ
C302	**ECEA1ES470**
C303	ECQS05471JZ
C304	**ECEA50ZR22**
C305	**ECEA50ZR47**
C306	**ECEA50MR47R**
C307, 308	ECQM1H473JZ
C309, 310	ECQM1H332KZ
C311, 312	ECKD1H271KB
C313, 314	**ECEA50ZR33**
C315	**ECEA1ES470**
C316	**ECEA2AS3R3**
C317	ECQM1H272KZ
C318, 319	**ECEA50Z3R3**
C320	**ECEA2AS3R3**
C401, 402	**ECEA50M3R3R**
C403, 404	**ECEA1AS101**
C405, 406	ECKD1H331KB
C407, 408	ECQP1472GZ
C409, 410	ECQPI183GZ
C411, 412	**ECEA50M1R**
C413	**ECEA1HS221**
C501, 502	ECQM1H332KZ
C503, 504	ECQM1H103KZ
C505, 506	ECQM1H223KZ
C507, 508	ECQM1H823KZ
C509, 510	ECQM1H274KZ
C511, 512	ECCD1H220K
C513, 514	ECQM1H682KZ
C515, 516	ECQM1H153KZ
C520	**ECEA1CS330**
C551, 552	ECQM1H473KZ
C553, 554	ECKD1H331KB
C601, 602	**ECEA50M4R7R**
C603, 604	ECCD1H820K
C605, 606	ECCD1H101K
C607, 608	ECCD1H331K
C609, 610	ECCD1H010K

Ref. No.	Part No.
C611, 612	**ECEA1CS330**
C613, 614	**ECEA1AS470**
C615, 616	**ECEA1HS101**
C617, 618	ECCD1H330K
C619, 620	ECKD1H103ZF
C621, 622	ECKD1H102ZF
C623, 624	ECKD1H102KB
C625, 626	ECCD2H101K
C627, 628	ECCD2H101K
C629, 630	ECQM1H473KZ
C631	**ECEA1JS101**
C632	**ECEA1VS330**
C633	**ECEA1JS331**
C634	**ECEA1JS221**
C701, 702	ECET55R153ZX
C703, 704	ECKD1H103ZF
C705	**ECEA1JS471**
C706	**ECEA1HS470**
C707, 708	**ECEA1HS221**
C709	ECKD1H103ZF
C751	ECKD1H103ZF
C752	**ECEA1CS471**
C753	ECKD1H103ZF
C801, 802	**ECEA2AS010**
C803, 804	**ECEA1HS100**
C805, 806	**ECEA2AS2R2**
C807	**ECEA1HS100**
C808	ECKD1H103ZF
C809, 810	**ECEA1HS100**
C811	**ECEA2ASR47**
C812	**ECEA1CS330**
C901	ECKD1H103ZF
C902	**ECEA50Z2R2**
C903	**ECEA1AS101**
C904	**ECEA16N220V**
C905	**ECEA1VS101**
C1001, 1002	ECQU1A103MC

■ BLOCK DIAGRAM OF INTEGRATED CIRCUITS

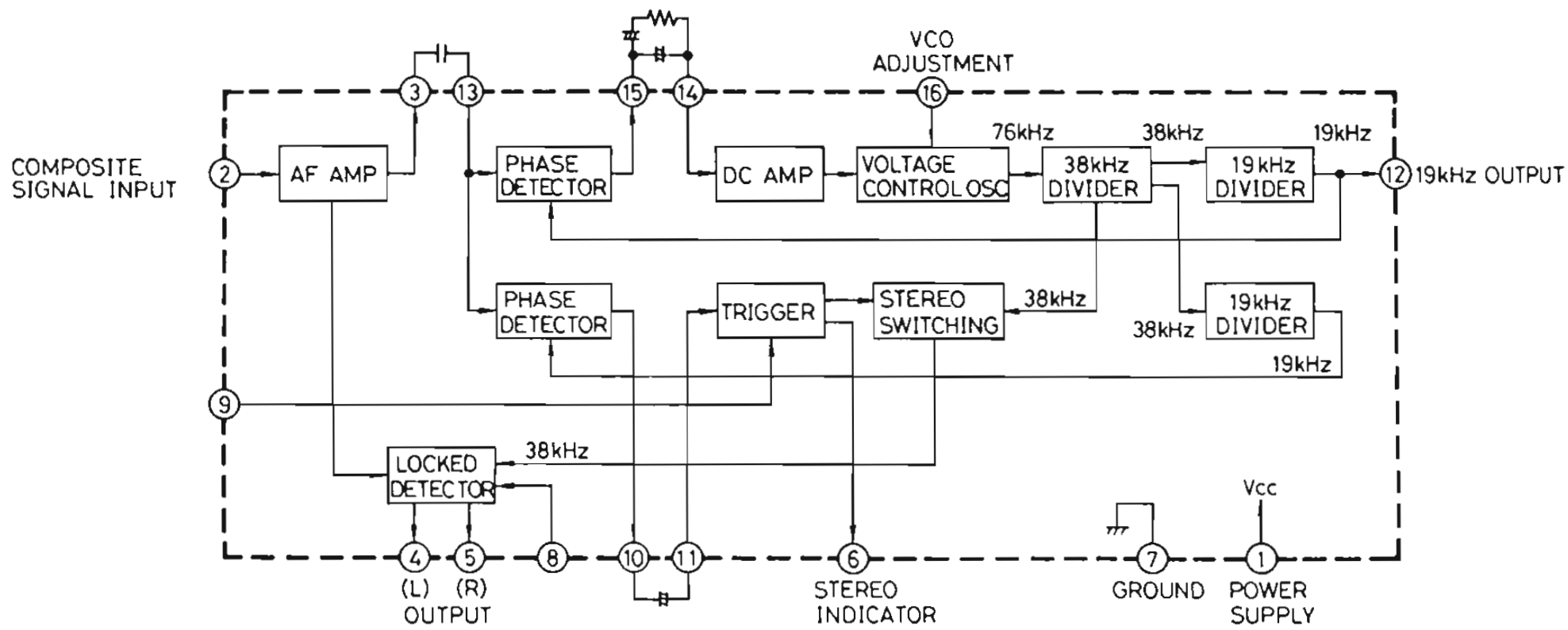

IC301 (AN363)
FM Multiplex

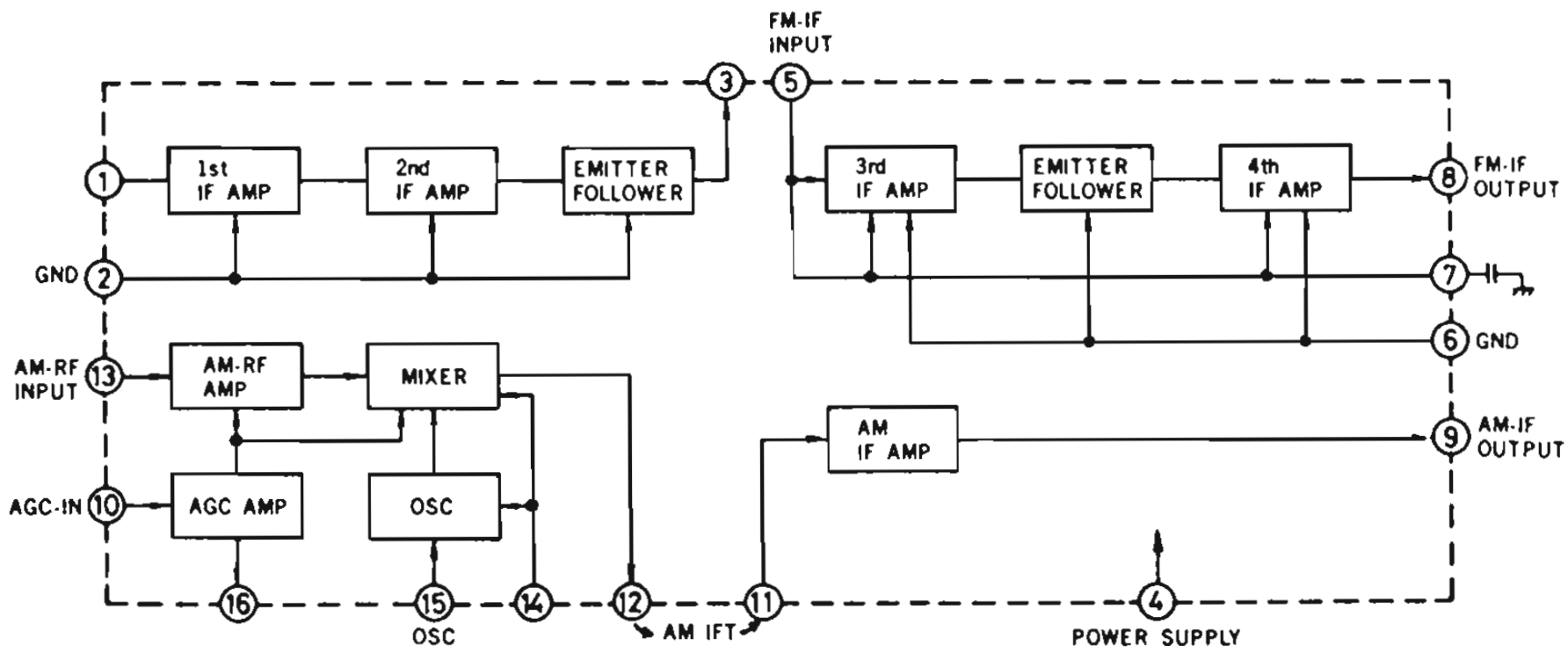

IC201 (AN217)
FM 2 Steps IF Amplifier
& AM Converter

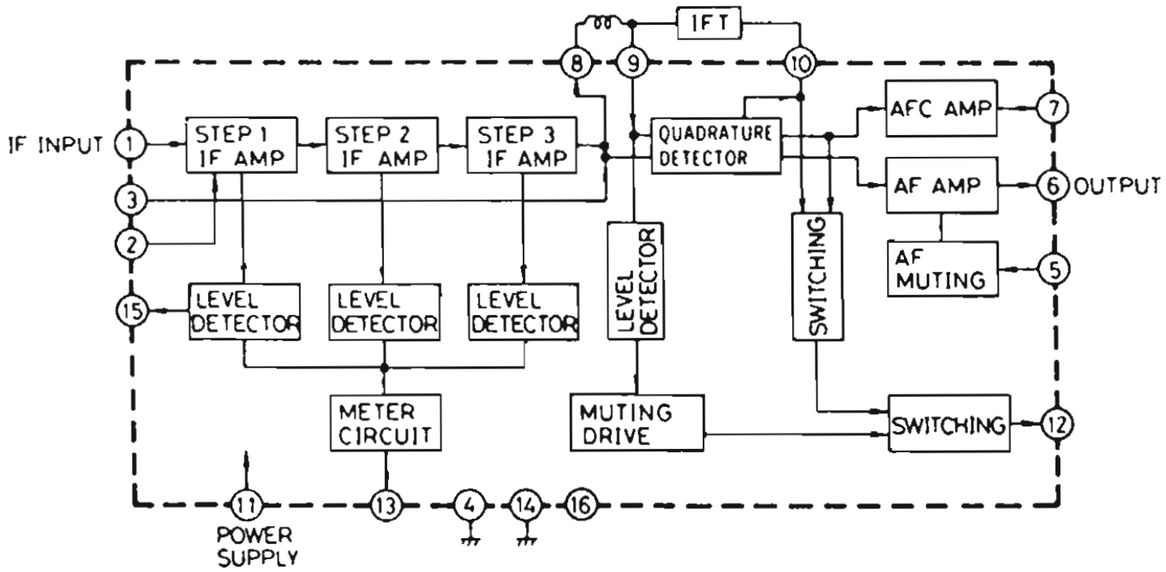

IC101 (AN377)
FM IF Amplifier & Detector

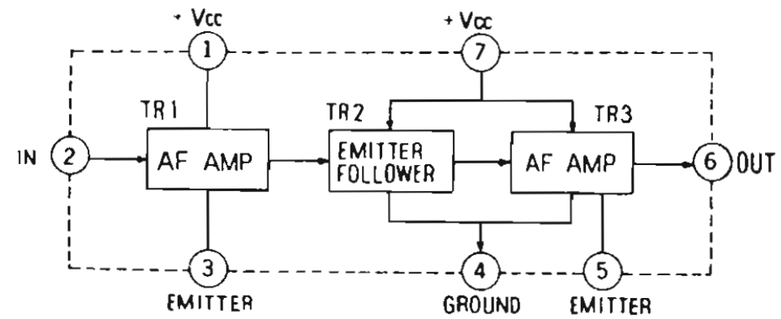

IC401, 402 (SVITA7129P)
Equalizer Amplifier

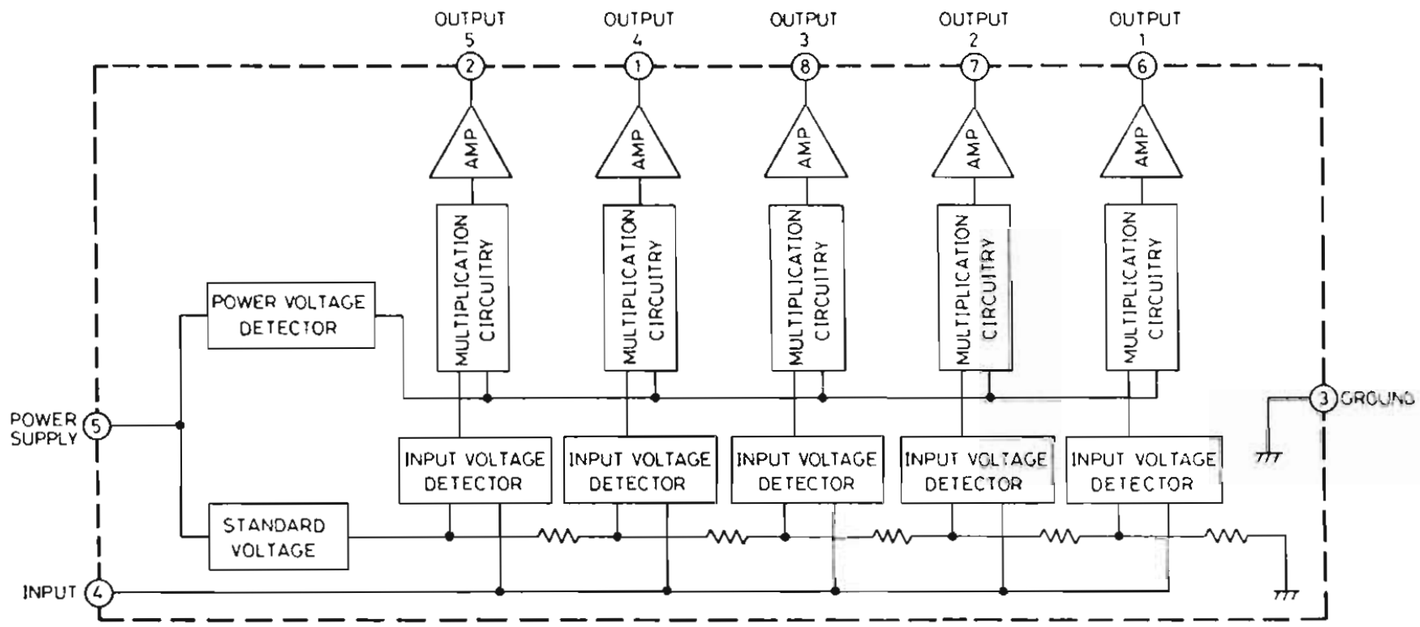

IC801, 802 (SVIM51903L)
Window Comparator

Schematic Diagram ... Model SA-600

Notes:

1. S1-1 ~ S1-6 : Selector switch in **"AM"** position.
   ① AM ↔ ② FM ↔ ③ PHONO ↔ ④ AUX
2. S2 : Tape Monitor switch in **"SOURCE"** position.
   ① TAPE 2 ↔ ② SOURCE ↔ ③ TAPE 1
3. S3 : Recording mode switch in **"SOURCE"** position.
   ① TAPE 2 ▶ 1 ↔ ② SOURCE ↔ ③ TAPE 1 ▶ 2
4. S4 : FM muting/Mode switch in **"ON/FM AUTO"** position.
5. S5 : Loudness switch in **"OFF"** position.
6. S6-1 ~ S6-4 : Acoustic high switch in **"OFF"** position.
   ① BOOST ↔ ② OFF ↔ ③ FILTER
7. S7-1 ~ S7-4 : Acoustic low switch in **"OFF"** position.
   ① BOOST ↔ ② OFF ↔ ③ FILTER
8. S8-1, S8-2 : Remote speakers switch in **"OFF"** position.
9. S9-1, S9-2 : Main speakers switch in **"ON"** position.
10. S10-1, S10-2 : Power display range switch in **"X1"** position.
11. S11 : Power display switch in **"ON"** position.
12. S1001 : Power source switch in **"ON"** position.
13. Indicated voltage values are the standard values for the unit measured by the DC electronic circuit tester (high impedance) with the chassis taken as standard. Therefore, there may exist some errors in the voltage values, depending on the internal impedance of the DC circuit tester.
    - Not apply signal to set and muting switch to OFF condition
    - AM signal reception
    - FM muting switch is turned on under no-signal condition.
14. AF Signal lines. FM Signal lines AM Signal lines.
15. This schematic diagram may be modified at any time with the developent of new technology.
16. VR1-1, 1-2 : Volume Control
17. VR2 : Balance Control
18. VR3-1, 3-2 : Treble Control
19. VR4-1, 4-2 : Bass Control

IMPORTANT SAFETY NOTICE
THE SHADED AREA ON THIS SCHEMATIC DIAGRAM INCORPORATES SPECIAL FEATURES IMPORTANT FOR SAFETY. WHEN SERVICING IT IS ESSENTIAL THAT ONLY MANUFACTUR'S SPECIFIED PARTS BE USED FOR THE CRITICAL COMPONENTS IN THE SHADED AREAS OF THE SCHEMATIC.

■ TERMINAL GUIDE

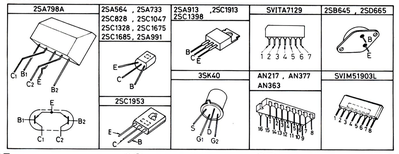

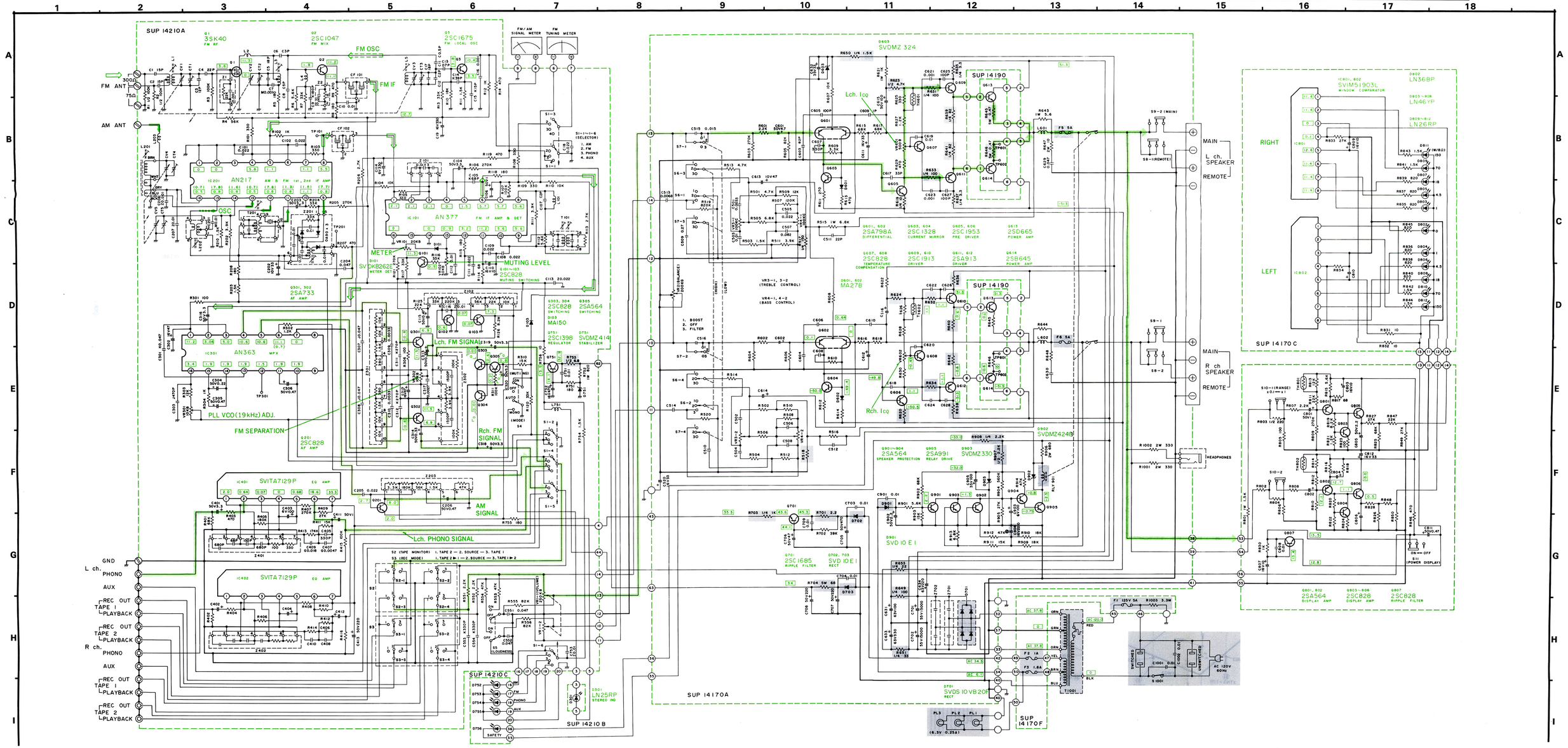

17 18 19 20

■ EXPLODED VIEWS

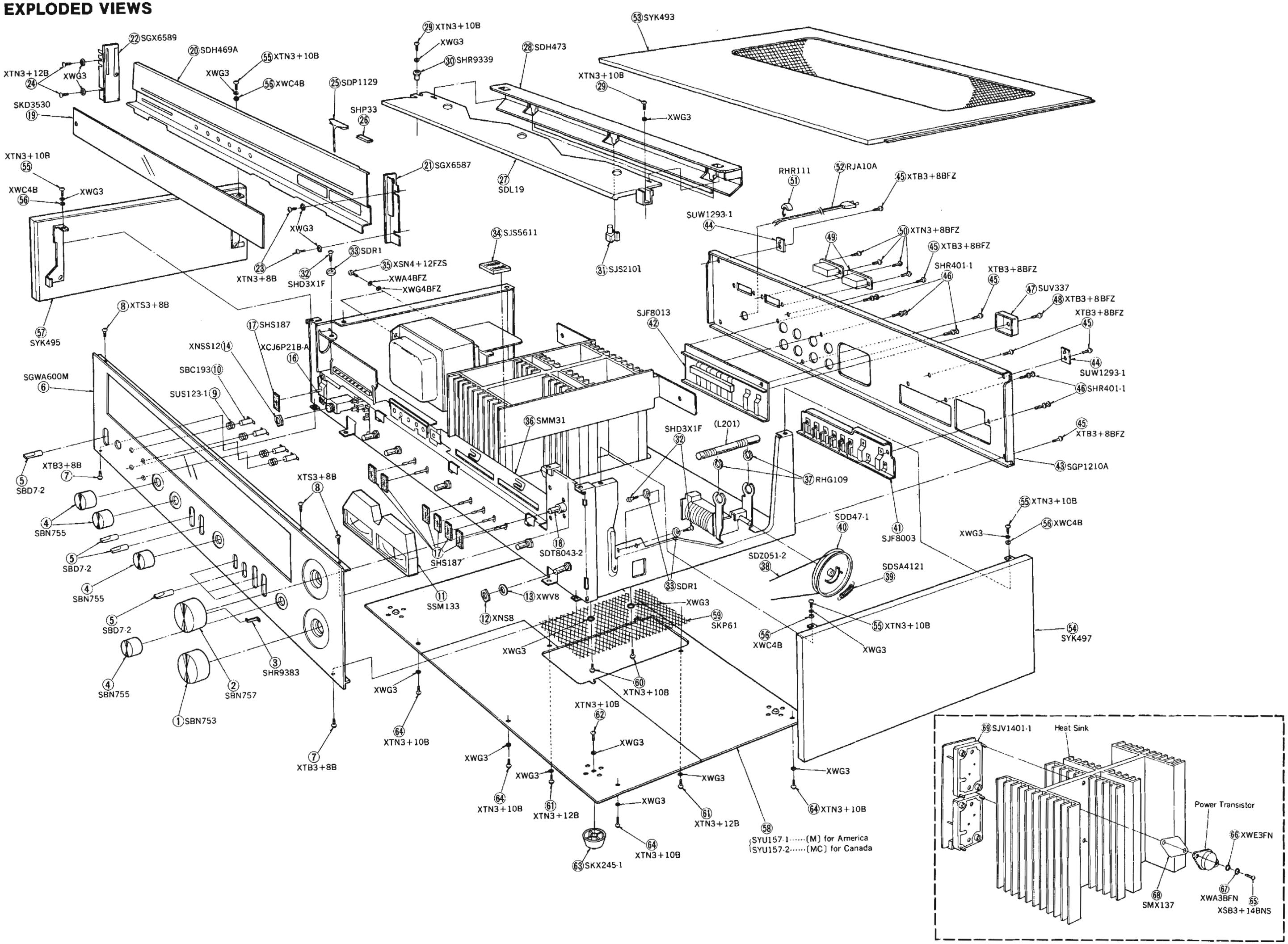

■ REPLACEMENT PARTS LIST

Important Safety Notice

Components identified by shaded area have special characteristics important for safety. When replacing any of these components use only manufacturer's specified parts.

NOTE: 1. Part numbers are indicated on most mechanical parts.
Please use this part number for parts orders.

Ref. No.	Part No.	Part Name & Description	Per Set		Remarks
		CABINET and CHASSIS PARTS			
1	SBN753	Knob, Volume	1		
2	SBN757	Knob, Tuning	1		
3	SHR9383	Spacer, Tuning Knob	1		
4	SBN755	Knob, Bass, Treble, Balance & Selector	4		
5	SBD7-2	Knob, Lever Switches	7		
6	SGWA600M	Panel, Front Ass'y	1		○
7	XTB3+8B	Screw, Front Panel M'tg	2		
8	XTS3+8B	Screw, Front Panel M'tg	3		
9	SUS123-1	Spring, Push Switches	4		
10	SBC193	Button, Push Switches	4		
11	SSM133	Meter, Signal & Tuning	1		
12	XNS8	Nut, Volumes & Selector	5		
13	XWV8	Washer, Volumes & Selector	5		
14	XNSS12	Nut, Headphones Jack M'tg	1		
16	XCJ6P21B-A	Headphones Jack	1		
17	SHS187	Shading Cloth, Lever Switches	7		
18	SDT8043-2	Shaft, Tuning	1		*
19	SKD3530	Scale, Dial	1		*○
20	SDH469A	Plate, Dial	1		*○
21	SGX6587	Bracket, Dial Scale Right Side	1		○
22	SGX6589	Bracket, Dial Scale Left Side	1		○
23	XTN3+8B	Screw, Dial Scale Bracket M'tg	2		
24	XTN3+12B	Screw, Dial Scale Bracket M'tg	2		
25	SDP1129	Pointer, Dial	1		*○
26	SHP33	Sheet, Pointer Slider	1		○
27	SDL19	Reflector Plate	1		○
28	SDH473	Reflector Plate	1		*○
29	XTN3+10B	Screw, Reflector Plate M'tg	2		
30	SHR9339	Spacer, Reflector Plate Screw	1		
31	SJS2101	Socket, Pilot Lamp	3		
32	SHD3X1F	Screw, Pulley M'tg	4		*
33	SDR1	Pulley, Dial Cord	4		
34	SJS5611	Connector, 6 pin	1		
35	XSN4+12FZS	Screw, Power Transformer M'tg	4		○
36	SMM31	Bracket, Meter	1		*○
37	RHG109	Rubber Cushion, AM Bar Antenna	2		
38	SDZ051-2	Cord, Dial 200cm (78-3/4")	1roll		
39	SDSA4121	Spring, Dial Cord	1		
40	SDD47-1	Drum, Variable Capacitor	1		
41	SJF8003	Terminal, Input & Antenna	1		
42	SJF8013	Terminal, Speakers	1		
43	SGP1210A	Rear Panel	1		○
44	SUW1293-1	Metal Fitting, Top Board M'tg	2		*○
45	XTB3+8BFZ	Screw, Rear Panel & Metal Fitting M'tg	8		
46	SHR401-1	Latch, Speakers & Input Terminal M'tg	6		
47	SUV337	Cover, Speaker Fuses	1		*
48	XTB3+8BFZ	Screw, Speaker Fuses Cover M'tg	1		
49	SJS9205-1	Socket, AC Outlet	2		
50	XTN3+8BFZ	Screw, AC Outlet Socket M'tg	4		
51	RHR111	Bushing, AC Cord	1		
52	**RJA10A**	AC Cord, Power Source	1		
53	SYK493	Top Board	1		○
54	SYK497	Side Board, Right Ass'y	1		○
55	XTN3+10B	Screw, Side Board M'tg	4		○
56	XWC4B	Washer, Cabinet	4		
57	SYK495	Side Board, Left Ass'y	1		○
58 (M)	SYU157-1	Bottom Board	1		*○
58 (MC)	SYU157-2	Bottom Board	1		*○
59	SKP61	Ventilation Plate	1		○
60	XTN3+10B	Screw, Ventilation Plate M'tg	2		
61	XTN3+12B	Screw, Ventilation Plate M'tg	2		
62	XTN3+10B	Screw, Set Foot M'tg	4		
63	SKX245-1	Foot, Set	4		
64	XTN3+10B	Screw, Bottom Board M'tg	7		
65	XSB3+14BNS	Screw, Power Transistors M'tg	8		
66	XWE3FN	Washer, Power Transistors Screw	8		
67	XWA3BFN	Washer (Spring), Power Transistors Screw	8		
68	SMX137	Mica Plate	4		○
69	SJV1401-1	Socket, Power Transistors	4		

■ PACKINGS

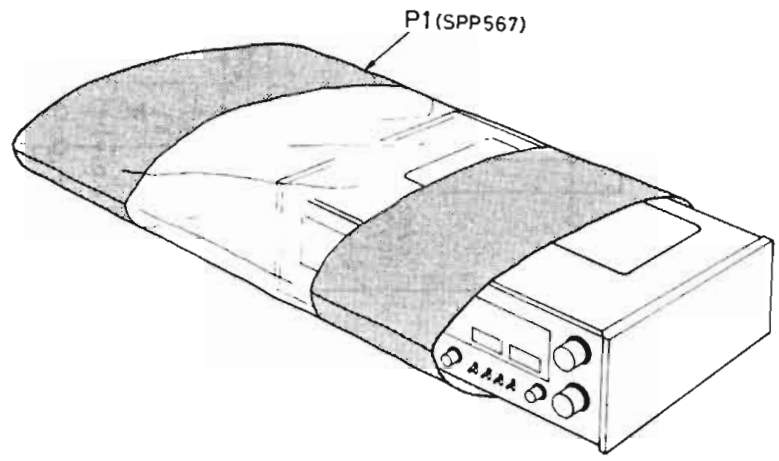

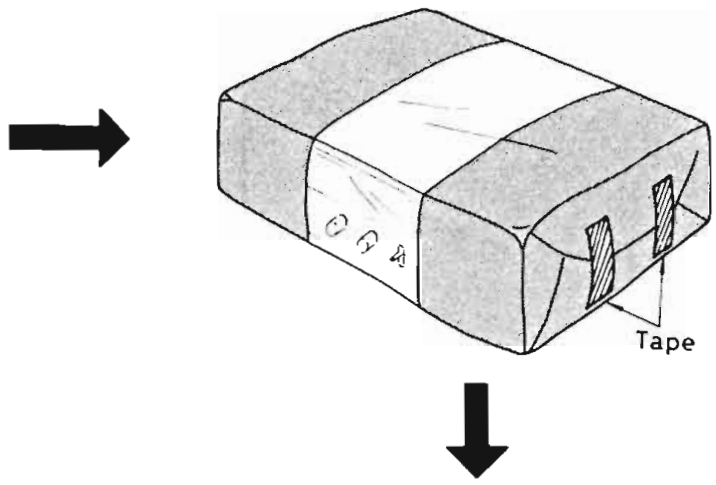

■ ACCESSORIES

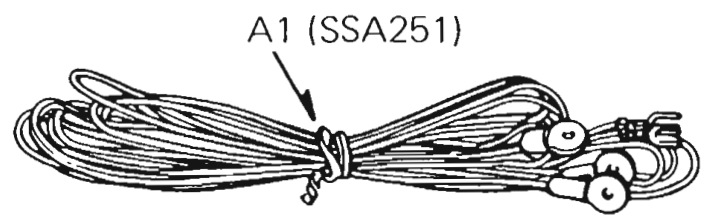

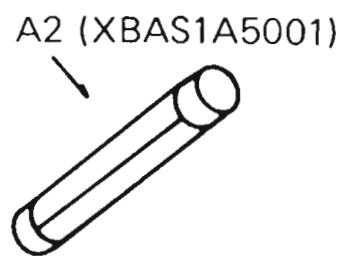

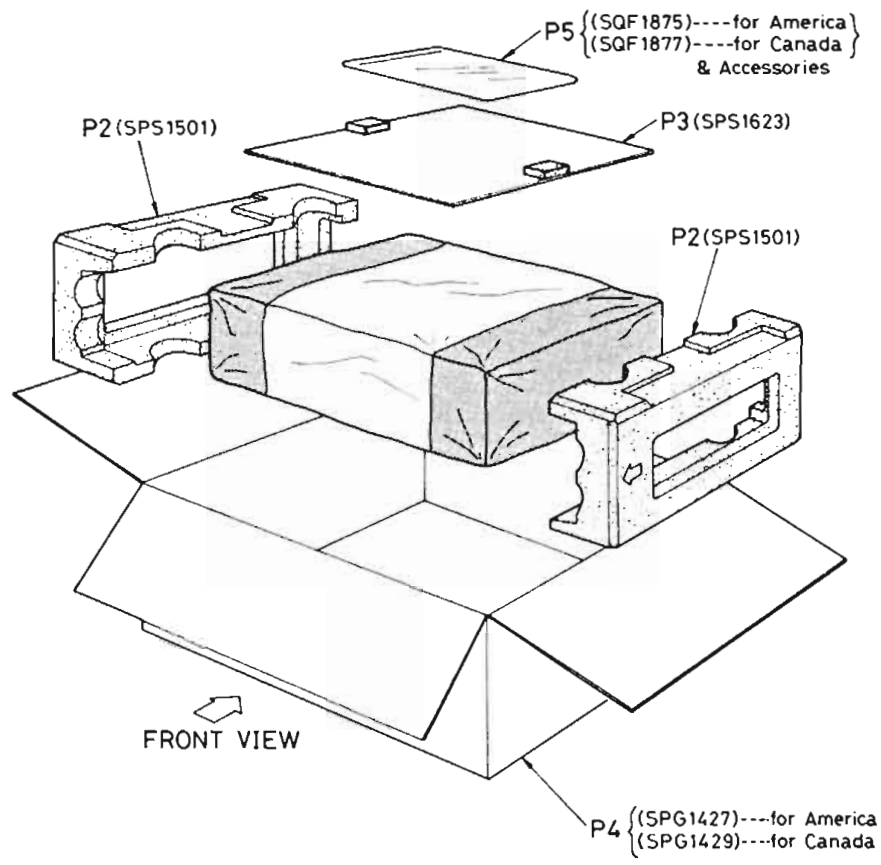

Ref. No.	Part No.	Part Name & Description	Per Set		Remarks
		ACCESSORIES			
A1	SSA251	Cord, FM Feeder	1		
A2	XBAS1A5001	Fuse, 5A(125V) Speaker Circuit	2		
		PACKING PARTS			
P1	SPP567	Polyethylene Bag	1		○
P2	SPS1501	Pad, Left and Right Side	2		○
P3	SPS1623	Pad, Set Top Side	1		○
P4 (M)	SPG1427	Carton Box	1		○
P4 (MC)	SPG1429	Carton Box	1		○
P5 (M)	SQF1875	Instructions Book, Printed Matter	1		○
P5 (MC)	SQF1877	Instructions Book, Printed Matter	1		○

(M) is available in America only.
(MC) is available in Canada only.

■ DIAL CORD INSTALLATION GUIDE
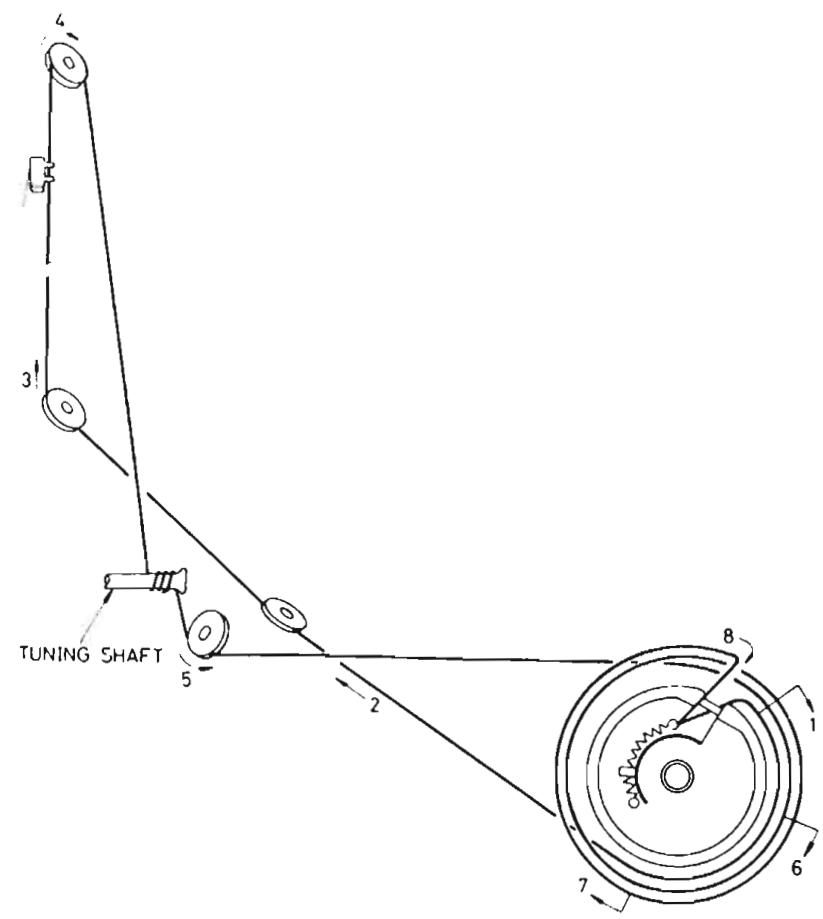
- For threading a fresh cord, proceed as follows.
  1. Prepare a fresh cord more than 200cm (78-3/4") in length.
  2. Bring the variable capacitor into a state where the drum is completely turned to the right (maximum capacity and lowest frequency for the variable capacitor).
  3. Direct the cord in the order from 1 to 8.
  4. Stretch the cord in such a tension as the spring length is elongated by 1.5 times that of the original state.
  5. Fix the knot of the cord with the bond.