Service Manual

Stereo Power Amplifier

SE-9021

(D), (DG), (X), (XA), (XGH), (XSW), (XGF), (XE)

SE-9021K

(D), (DG), (XGH), (XSW)

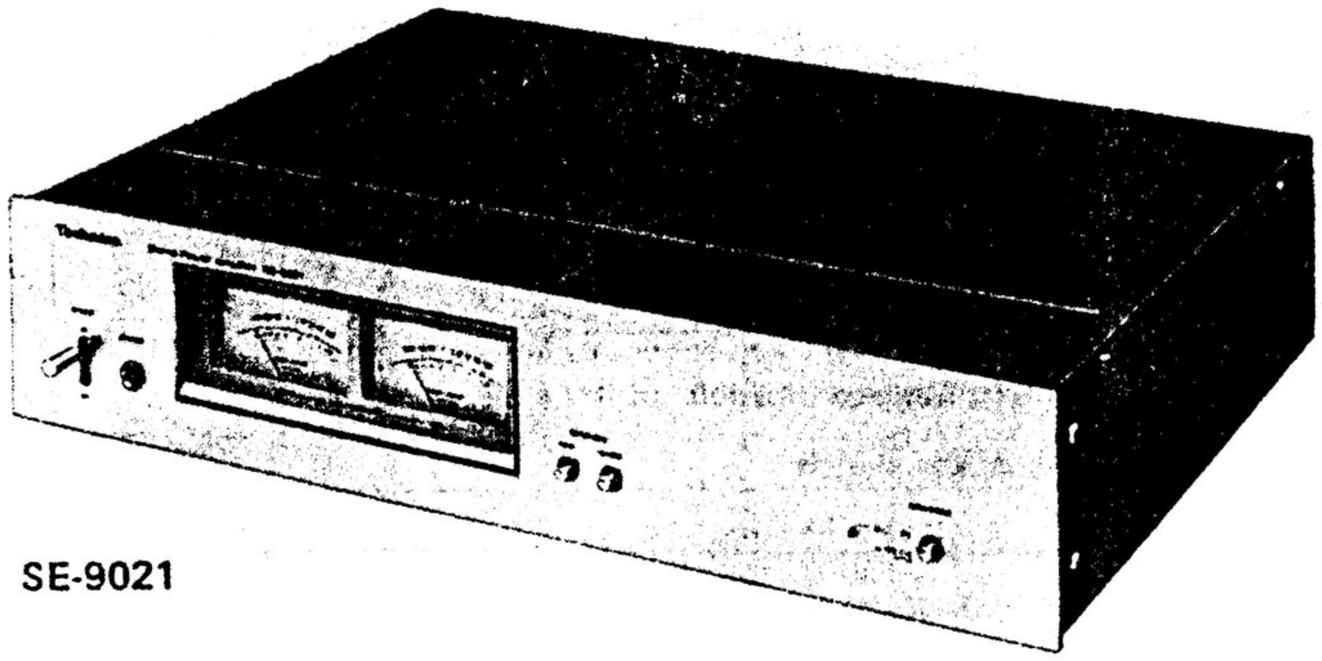

SE-9021

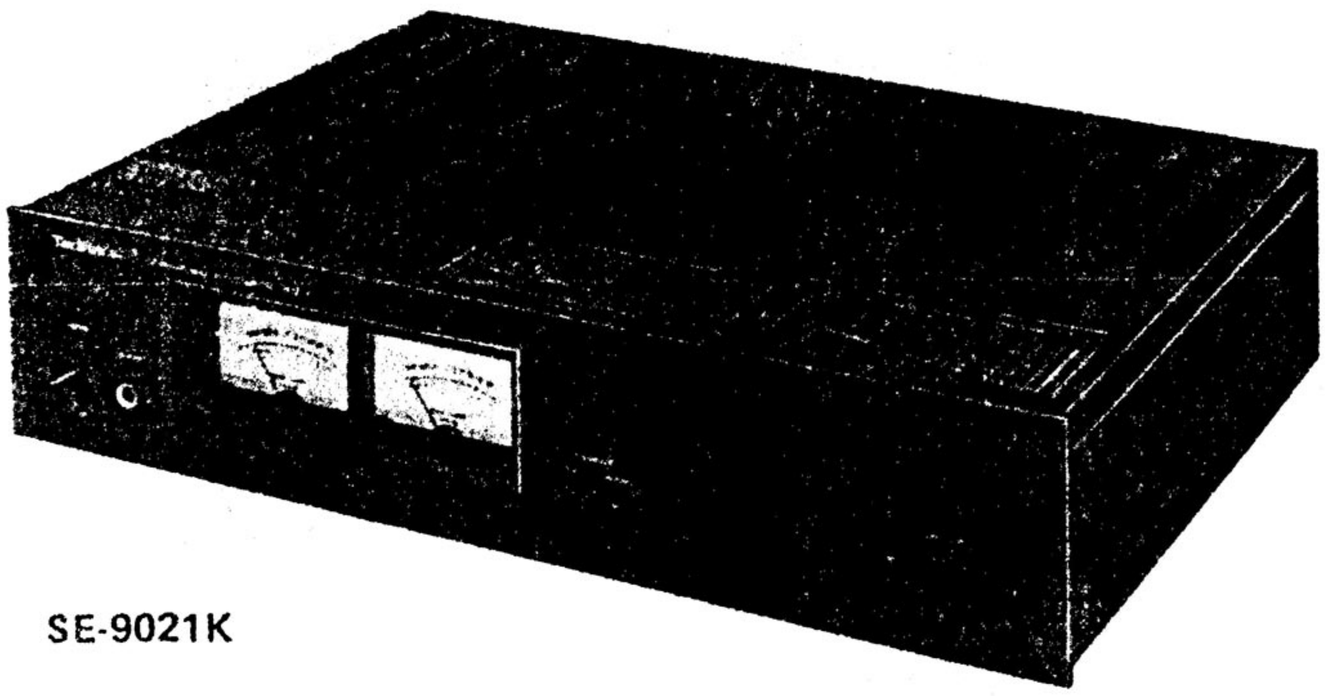

SE-9021K

* The models SE-9021 (D, DG) and SE-9021K (D, DG) are available in Scandinavia and European only.
* The models SE-9021 (X) and SE-9021 (XA) are available in Asia, Latin America, Middle East and Africa only
* The models SE-9021 (XGH) and SE-9021K (XGH) are available in Holland only.
* The models SE-9021 (XSW) and SE-9021K (XSW) are available in Switzerland only.
* The model SE-9021 (XGF) is available in France only.
* The model SE-9021 (XE) is available in United Kingdom only.

TECHNICAL SPECIFICATIONS

Specifications are subject to change without notice for further improvement.

[DIN 45 500]

AMPLIFIER SECTION

1 kHz continuous power output	
both channels driven	2 x 75 W (4 Ω), 2 x 65 W (8 Ω)
40 Hz ~ 16 kHz continuous power output	
both channels driven	2 x 65 W (4 Ω), 2 x 60 W (8 Ω)
20 Hz ~ 20 kHz continuous power output	
both channels driven	2 x 65 W (4 Ω), 2 x 60 W (8 Ω)
Power bandwidth	
both channels driven, –3 dB	5 Hz ~ 45 kHz (4 Ω)
	5 Hz ~ 60 kHz (8 Ω)
Total harmonic distortion	
rated power at 1 kHz	0.01% (4 Ω, 8 Ω)
rated power at 40 Hz ~ 16 kHz	0.01% (4 Ω, 8 Ω)
rated power at 20 Hz ~ 20 kHz	0.01% (4 Ω, 8 Ω)
half power at 20 Hz ~ 20 kHz	0.005% (4 Ω, 8 Ω)
half power at 1 kHz	0.0035% (4 Ω) 0.0025% (8 Ω)
–26 dB power at 1 kHz	0.01% (4 Ω)
50 mW power at 1 kHz	0.01% (4 Ω)
Intermodulation distortion	
rated power at 250 Hz: 8 kHz, = 4:1, 4Ω	0.015%
rated power at 60 Hz: 7 kHz, = 4:1, SMPTE, 8Ω	0.01%
Headphones output level and impedance	500 mV/330 Ω
Load impedance MAIN or REMOTE	4 ~ 16 Ω
MAIN + REMOTE	8 ~ 16 Ω
Residual hum & noise	0.2 mV (0.1 mV, IHF A)
Damping factor	50 (4 Ω), 100 (8 Ω)
Input sensitivity and impedance	1 V, 47 kΩ
S/N	100 dB (113 dB, IHF A)
Frequency response	20 Hz ~ 20 kHz, +0, –0.1 dB
	0 Hz ~ 100 kHz, –1 dB
Channel balance, AUX 250 Hz ~ 6300 Hz	±0.1 dB
Channel separation, AUX 1 kHz	75 dB

METER SECTION

Attack time	100μsec.
Recovery time	750 msec. (0dB → –20 dB)
Meter range	+3dB ~ –50dB

GENERAL

Power consumption	610 W
	320 W (only for [X] and [XA])
Power supply	50 Hz/60 Hz, 110 V/120 V/220 V/240 V
Dimensions (W x H x D)	430 x 98 x 331 mm
	(16⅞" x 3⅞" x 13⅛")
Weight	10 kg (22.1 lb.)

Technics

Matsushita Electric Trading Co., Ltd.
P.O. Box 288, Central Osaka Japan

www.hifiengine.com

■ LOCATION OF CONTROLS

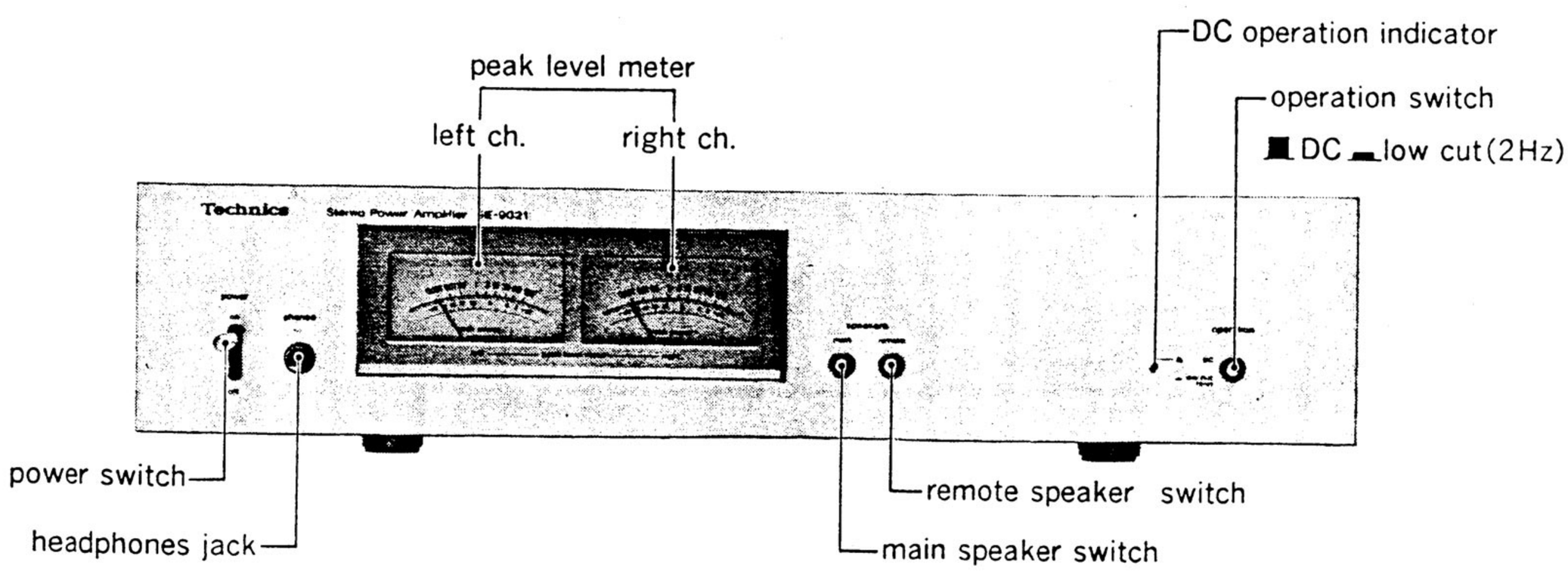

TECHNISCHE DATEN

Spezifikationen können infolge von Verbesserungen ohne Ankündigung geändert werden.

[DIN 45 500]

VERSTÄRKERTEIL

Dauertonleistung bei 1 kHz	
beide Kanäle angesteuert	2 x 75 W (4 Ω), 2 x 65 W (8 Ω)
Dauertonleistung bei 40 Hz ~ 16 kHz	
beide Kanäle angesteuert	2 x 65 W (4 Ω), 2 x 60 W (8 Ω)
Dauertonleistung bei 20 Hz ~ 20 kHz	
beide Kanäle angesteuert	2 x 65 W (4 Ω), 2 x 60 W (8 Ω)
Leistungsbandbreite	
beide Kanäle angesteuert bei –3 dB	5 Hz ~ 45 kHz (4 Ω), 5 Hz ~ 60 kHz (8 Ω)
Klirrfaktor	
Nennausgangsleistung bei 1 kHz	0,01% (4 Ω, 8 Ω)
Nennausgangsleistung bei 40 Hz ~ 16 kHz	0,01% (4 Ω, 8 Ω)
Nennausgangsleistung bei 20 Hz ~ 20 kHz	0,01% (4 Ω, 8 Ω)
halber Ausgangsleistung bei 20 Hz ~ 20 kHz	0,005% (4 Ω, 8 Ω)
halber Ausgangsleistung bei 1 kHz	0,0035% (4 Ω) 0,0025% (8 Ω)
–26 dB Ausgangsleistung bei 1 kHz	0,01% (4 Ω)
50 mW Ausgangsleistung bei 1 kHz	0,01% (4 Ω)
Intermodulationsverzerrung	
Nennausgangsleistung bei 250 Hz: 8 kHz = 4:1,4Ω	0,015%
Nennausgangsleistung bei 60 Hz: 7 kHz = 4:1,8Ω	0,01%
Kopfhörerpegel und Ausgangsimpedanz	500 mV/330 Ω
Lautsprecher-Ausgangsimpedanz	
MAIN oder REMOTE	4 ~ 16 Ω
MAIN und REMOTE	8 ~ 16 Ω
Hum & Noise	0,2 mV (0,1 mV IHF. A)
Dämpfungsfaktor	50 (4 Ω), 100 (8 Ω)
Eingangsempfindlichkeit & Impedanz	1 V, 47 kΩ
Fremdspannungsabstand	100 dB (113 dB, IHF, A)
Frequenzgang	20 Hz ~ 20 kHz, +0, –0,1 dB 0 Hz ~ 100 kHz, –1 dB
Kanalabweichung, AUX 250 Hz ~ 6300 Hz	±0,1 dB
Kanaltrennung, AUX 1 kHz	75 dB

METERTEIL

Ausschlagzeit	100μsec.
Rückfallzeit	750 msec (0dB → –20dB)
Meter Bereich	+3dB ~ –50dB

ALLGEMEINE DATEN

Leistungsaufnahme	610 W
Netzspannung, umschaltbar	50 Hz/60 Hz, 110V/120 V/220 V/240 V
Abmessungen (B x H x T)	430 x 98 x 331 mm
Gewicht	10 kg

CARACTERISTIQUES TECHNIQUES

Sujet à changement sans préaris.

[DIN 45 500]

PARTIE AMPLIFICATEUR

1 kHz, puissance continue	
les 2 canaux modulés	2 x 75 W (4Ω), 2 x 65 W (8Ω)
40 Hz ~ 16 kHz, puissance continue	
les 2 canaux modulés	2 x 65 W (4Ω), 2 x 60 W (8Ω)
20 Hz ~ 20 kHz, puissance continue	
les 2 canaux modulés	2 x 65 W (4Ω), 2 x 60 W (8Ω)
Largeur de bande de puissance	
les 2 canaux modulés, –3 dB	5 Hz ~ 45 kHz (4Ω) 5 Hz ~ 60 kHz (8Ω)
Distorsion harmonique totale	
pour la puissance nominal, 1 kHz	0,01% (4Ω, 8Ω)
pour la puissance nominale, 40 Hz~16 kHz	0,01% (4Ω, 8Ω)
pour la puissance nominale, 20 Hz~20 kHz	0,01% (4Ω, 8Ω)
pour la demi-puissance nominale, 20Hz ~ 20 kHz	0,005% (4Ω, 8Ω)
pour la demi-puissance nominale, 1 kHz	0,0035% (4Ω) 0,0025% (8Ω)
pour une puissance mesurée de –26 dB, 1 kHz	0,01% (4Ω)
pour une puissance mesurée de 50 mW, 1 kHz	0,01% (4Ω)
Distorsion d'intermodulation	
pour la puissance nominale, 250 Hz: 8 kHz = 4:1,4Ω	0,015%
pour la puissance nominale, 60 Hz: 7 kHz = 4:1,8Ω	0,01%
Niveau des écouteurs et impédance de sortie	500 mV/330 Ω
Impédance de charge MAIN ou REMOTE	4 ~ 16 Ω
MAIN + REMOTE	8 ~ 16 Ω
Ronflement et bruit résiduels	0,2 mV (0.1 mV IHF. A)
Facteur d'amortissement	50 (4 Ω), 100 (8 Ω)
Sensibilité & impedance d'entrée	1 V, 47 kΩ
Signal/Bruit	100 dB (113 dB, IHF A)
Réponse de fréquence	20 Hz ~ 20 kHz, +0, –0,1 dB 0 Hz ~ 100 kHz, –1 dB
Equilibrage de canaux, AUX 250 Hz ~ 6300 Hz	±0,1 dB
Séparation des canaux, AUX 1 kHz	75 dB

PARTIE INDICATEUR

Temps d'"attaque"	100μsec.
Temps de rétablissement	750 msec. (0dB → –20dB)
Plage des indicateurs	+3dB ~ –50dB

GENERALITES

Consommation	610 W
Alimentation	50 Hz/60 Hz, 110 V/120 V/220 V/240 V
Dimensions (L x H x Pr)	430 x 98 x 331 mm
Poids	10 kg

www.hifiengine.com

■ LOCATION OF CONTROLS

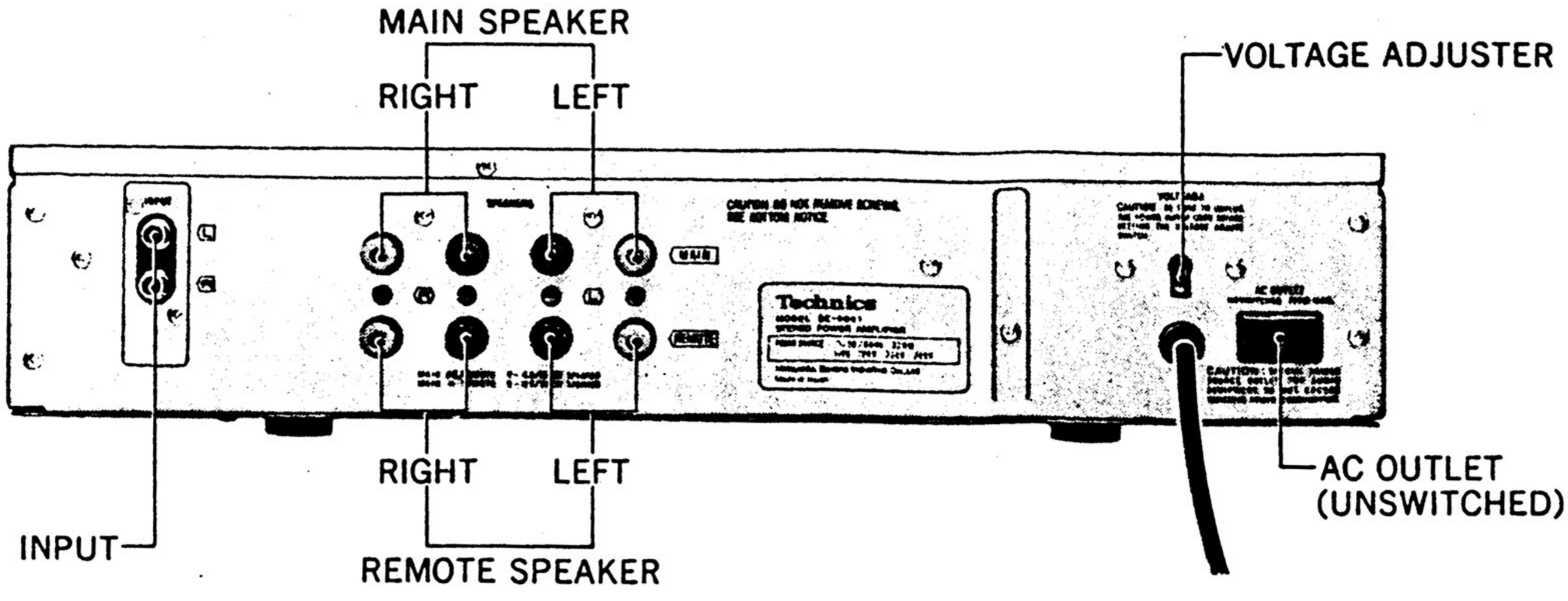

* This photo shows only the products for [X] and [XA].
* The products for other destinations except [X] and [XA] are not equipped with AC outlet.

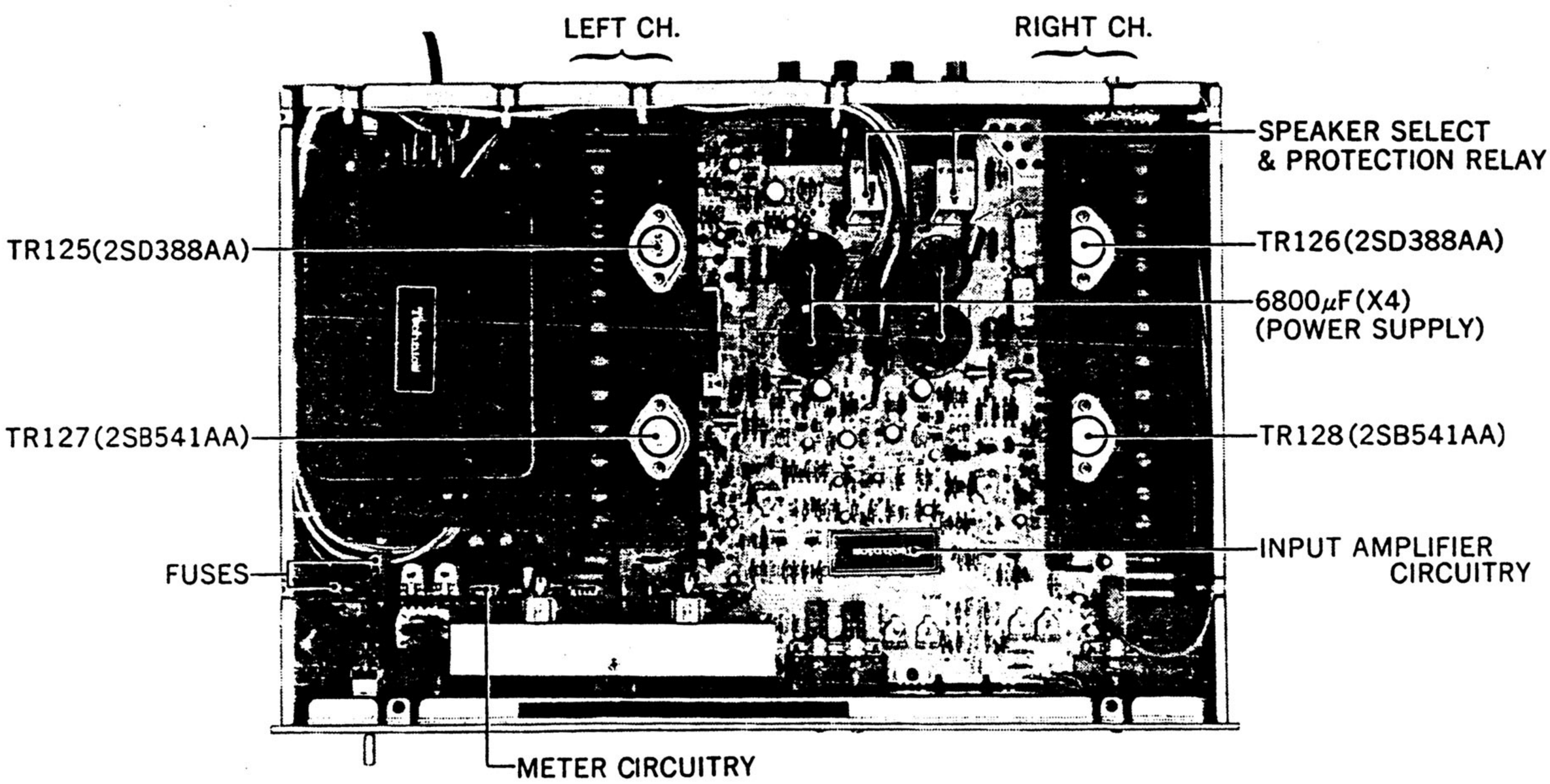

■ HOW TO REMOVE THE FRONT PANEL

1. Remove five top board-mounting screws, nos. 1 ~ 5 as shown in fig. 1.
2. Remove the top board from chassis.
3. Remove six front panel-mounting screws, nos. 6 ~ 11 as shown in fig. 2.
4. Draw out power switch knob.
5. Remove the front panel from chassis.
6. When remove the bottom board, remove eleven bottom board screws, nos. 10 ~ 20 as shown in fig. 2.
(No. 14, 16, 17 and 20 screws are with washer.)

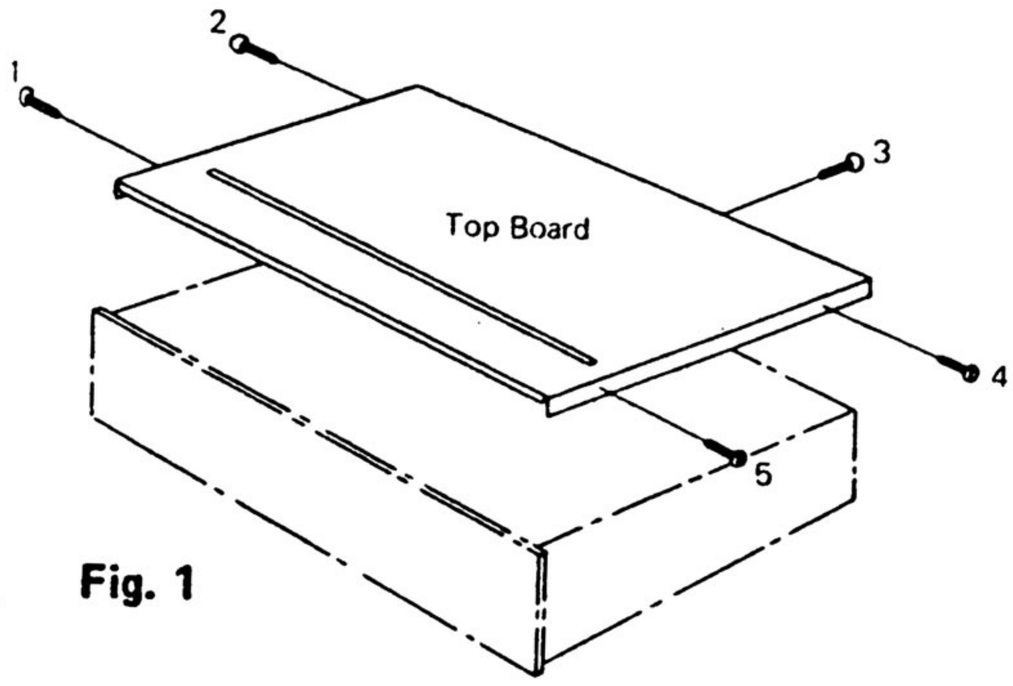

Fig. 1

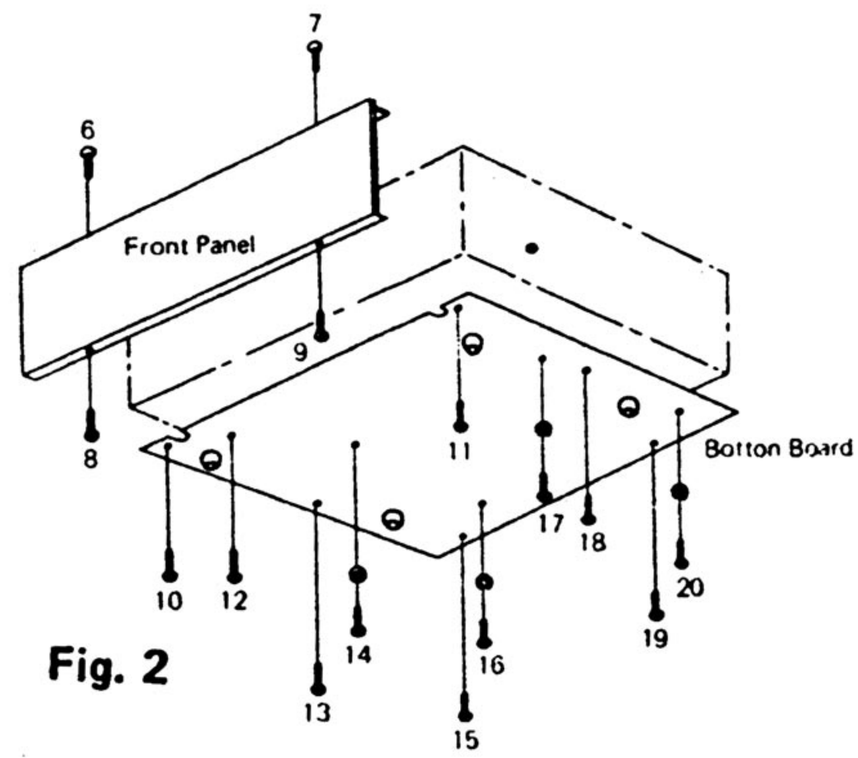

Fig. 2

■ ALIGNMENT INSTRUCTIONS ENGLISH

(Note 1) Turn off the power source beforehand, and then discharge all the 4 electrolytic capacitors (6800μF) by short-circuiting with resistance (about 10Ω, 3W).
When replacing power transistors use 2SD388AA and 2SB541AA which are same in h_{FE} rank.

Setting:
1. Operation switch . . . . . .DC
2. Main Speaker switch . . . . . .ON
3. Remote speaker switch. . . . .ON

Adjusting items	DC voltmeter connection	Adjusting parts	Adjusting procedure
DC unbalanced voltage adjustment	Connect it to speaker terminals of L and R channels.	VR103 (Lch) VR104 (Rch)	○ Short-circuit between TP107 and TP109, TP108 and TP110 respectively. ○ Make the adjustment using as small measuring range as possible until the meter indicates 0 (zero).
DC unbalanced voltage adjustment	Connect it to speaker terminals of L and R channels.	VR101 (Lch) VR102 (Rch)	○ Open the circuit between TP107 and TP109, TP108 and TP110 respectively. ○ Shift the operation switch to "low cut". ○ Make the adjustment using as small measuring range as possible until the meter indicates 0 (zero).
ICQ (Idle current of power transistor) adjustment	+ . . . TP101 } (Lch) — . . . TP105 } + . . . TP102 } (Rch) — . . . TP106 }	VR105 (Lch) VR106 (Rch)	○ A few minutes after turning on the power source, make the adjustment so that the meter indicates 13 mV.
Power meter Adjustment	Connect AC voltmeter to speaker terminals of L and R channels.	VR401 (Lch) VR402 (Rch)	○ Connect RC oscillator to input terminal. ○ Apply 1 kHz sine wave, and adjust the oscillator level so that the output voltage of speaker terminal becomes 22 V. ○ At that time, make the adjustment so that the meter indicates 0 dB.

■ ANWEISUNGEN FÜR ABGLEICHUNG DEUTSCH

(Anmerkung 1) Vor Reparature Storomquelle ausschalten, alle 4 elektrolytische Kondensatoren (6800μF) durch Kurzschluß mit Wiederstand (ca. 10 ohm, 3W) entladen. Bei Auswechselung der Leistungstransistoren die in h_{FE}-Bereich gleiche 2SD388AA und 2SB541AA verwenden.

Einstellung:
1. Bedienungsschalter . . . . . .DC (Gleichstrom)
2. Hauptlautsprecherschalter . . . . . .ON
3. Lautsprecherfernschalter. . . . . .ON

Einstellung	Anschluß des Gleichstrom-Voltmeters	Einzustellende Teile	Einstellve fahren
Ungleiche Gleichstrom-spannung	An Lautsprecher-klemmen des L und R-Kanals anschließen.	VR103 (L-Kanal) VR104 (R-Kanal)	○ Zwischen TP107 und TP109, TP108 und TP110 jeweils kurzschließen. ○ Unter Verwendung von möglichst kleinen Meßbereich auf 0 einstellen.
Ungleiche Gleichstrom-spannung	An lautspre-cherklemmen des L und R-Kanals anschließen.	VR101 (L-Kanal) VR102 (R-Kanal)	○ Den Kreis zwischen TP107 und TP109, TP108 und TP110 jeweils öffnen. ○ Bedienungsschalter auf "low cut" umschalten. ○ Unter Verwendung von möglichst kleinen Meßbereich auf 0 einstellen.
ICQ (Blind-strom des Leistungs-transistors)	+ . . . TP101 } (L-Kanal) — . . . TP105 } + . . . TP102 } (R-Kanal) — . . . TP106 }	VR105 (L-Kanal) VR106 (R-Kanal)	○ Stromquelle einschalten und auf 13 mV einstellen.
Leistungs-meßgerät	Wechselstrom-Voltmeter an Lautsprecher-klemmen von L-. und R-Kanal schließen.	VR401 (L-Kanal) VR402 (R-Kanal)	○ RC-Oszillator an Eingangsklemme schließen. ○ Mit Sinuswelle von 1 kHz die Oszillatorspannung so einstellen, daß Ausgangsspannung der Laut-sprecherklemme 22V beträgt. ○ Gleichzeitig auf 0 dB einstellen.

www.hifiengine.com

■ INSTRUCTIONS D'ALIGNEMENT — FRANÇAIS

(Note 1) Préalablement éteindre l'alimentation électrique, puis décharger les 4 condensateurs électrolytiques (6800μF) en court-circuitant avec une résistance (environ 10 ohms, 3W).
Lors du remplacement des transistors d'alimentation, utiliser 2SD388AA et 2SB541AA qui sont les mêmes dans l'ordre h_{FE}.

Réglages:
1. Commutateur de fonctionnement. . . . . .C.C.
2. Commutateur de l'enceinte principale . . . . . .MARCHE (ON)
3. Commutateur de l'enceinte à distance . . . . . .MARCHE (ON)

Eléments à régler	Branchement du Voltmètre à courant continu (C.C)	Composants à régler	Procédé de réglage
Réglage du voltage C.C déséquilibré	Le brancher aux bornes des enceintes des canaux droit et gauche.	VR103 (Can. Gauche) VR104 (Can. Droit)	○ Court-circuiter respectivement entre TP107 et TP109, TP108 et TP110. ○ Effectuer le réglage en utilisant la plus patite gamme de mesure, possible jusqu'à ce que le compteur indique le 0. (zéro).
Réglage du voltage C.C déséquilibré	Le brancher aux bornes des enceintes des canaux droit et gauche.	VR101 (Can. Gauche) VR102 (Can. Droit)	○ Ouvrir le circuit respectivement entre TP107 et TP109, TP108 et TP110. ○ Déplacer le commutateur de fonctionnement sur "low cut". ○ Effectuer le réglage en utilisant la plus petite gamme de mesure, possible, jusqu'à ce que le compteur indique le 0 (zéro).
Réglage de ICQ (courant déwatté du transistor d'alimentation).	+ . . . TP101 } (Can. G.) − . . . TP105 } + . . . TP102 } (Can. D.) − . . . TP106 }	VR105 (Can. Gauche) VR106 (Can. Droit)	○ Quelques minutes après avoir branché l'alimentation électrique, effectuer le réglage de telle sorte que le compteur indique 13mV.
Réglage du compteur d'alimentation	Brancher le voltmètre de courant alternatif aux bornes des enceintes des canaux droit et gauche.	VR401 (Can. Gauche) VR402 (Can. Droit)	○ Brancher l'oscillateur à la borne d'entrée. ○ Appliquer une onde sinusoidale de 1 kHz, et régler le niveau de l'oscillateur de telle sorte que le voltage de sortie de la borne de l'enceinte, soit de 22V. ○ Pendant ce temps effectuer le réglage de telle sorte que le compteur indique 0dB.

■ ALIGNMENT POINTS

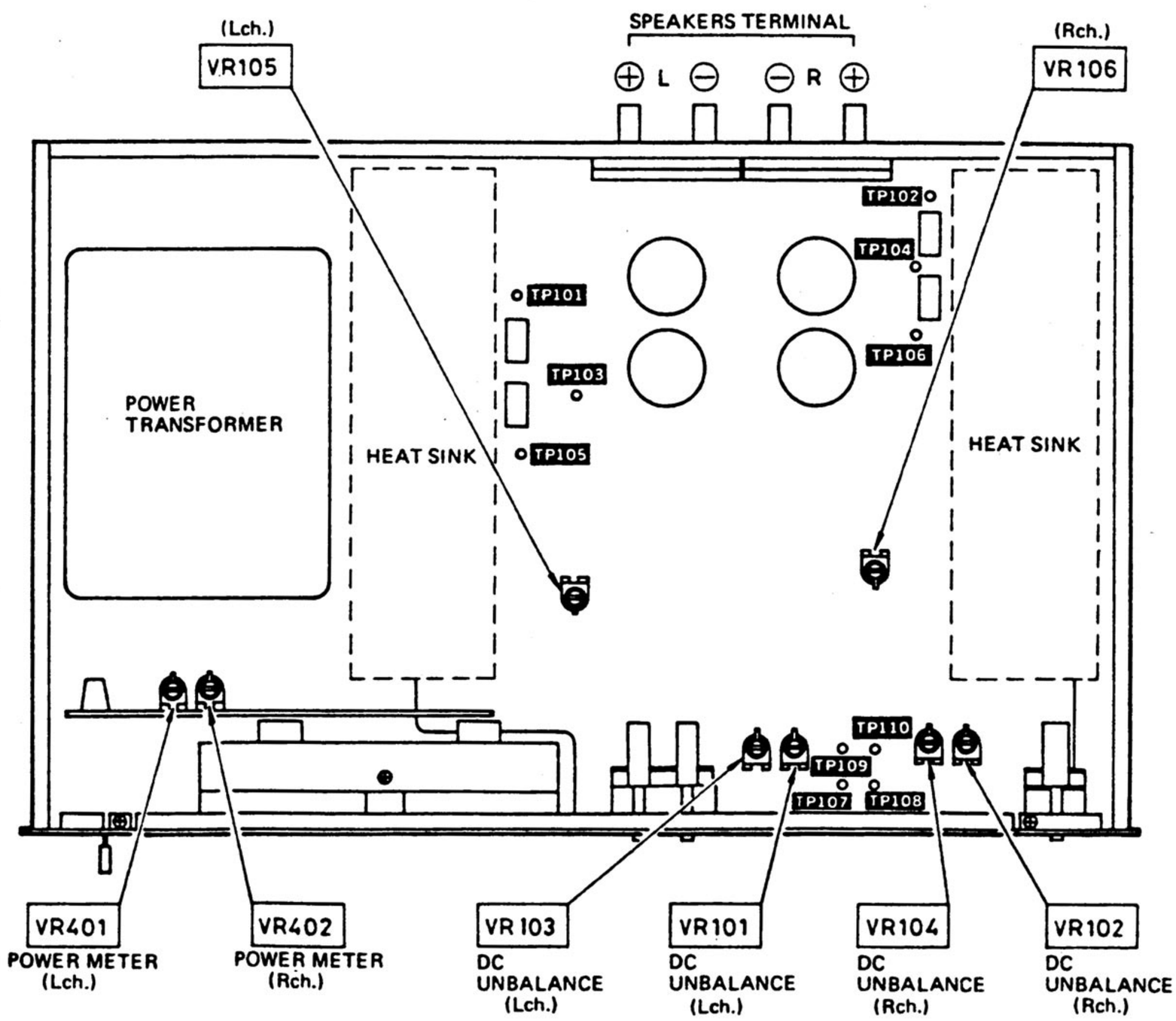

www.hifiengine.com

■ REPLACEMENT PARTS LIST

NOTES: 1. Part numbers are indicated on most mechanical parts. Please use this part number for parts orders.
2. S indicates that only parts specified by the manufacturer be used for safety.
3. Guide letters of Resistor and Capacitor indicate;

Resistors
ERD..... Carbon
ERF..... Non-Flammable
ERX ..... Metal film
ERG..... Metal oxide

Capacitors
ECC..... Ceramic
ECK..... Ceramic
ECE..... Electrolytic
ECQ..... Polyester
ECE [ ] N .... Non-polar electrolytic

Ref. No.		Part No.
RESISTORS		
R101, 102		ERD25TJ563
R103, 104		ERD25TJ334
R105, 106		ERD25TJ104
R107, 108		ERD25TJ104
R109, 110		ERD25TJ102
R111, 112		ERD25TJ334
R113, 114		ERD25TJ103
R115, 116		ERD25TJ561
R117, 118		ERD25TJ152
R119, 120		ERD25TJ223
R121, 122		ERD25TJ561
R125, 126		ERD25TJ682
R127, 128		ERD25TJ332
R129, 130		ERD25TJ563
R131, 132		ERD25TJ472
R133, 134	S	ERD14FJ271
R135, 136		ERD25TJ104
R137, 138		ERD25TJ123
R139, 140		ERD25TJ103
R141, 142	S	ERD14FJ332
R143, 144		ERD25TJ331
R145, 146	S	ERD14FJ561
R147, 148		ERD25TJ102
R149, 150	S	ERD14FJ101
R151, 152	S	ERD14FJ391
R153	S	ERD14FJ561
R154	S	ERD14FJ391
R155, 156	S	ERD14FJ561
R157, 158		ERD25TJ272
R159, 160		ERD25TJ272
R161, 162	S	ERD14FJ561
R163, 164	S	ERD14FJ2R2
R165, 166	S	ERD14FJ2R2
R167, 168	S	ERD14FJ561
R169, 170	S	ERF5AKR33
R171	S	ERF5AKR47
R172	S	ERF5AKR33
R173, 174		ERX2ANJ4R7
R175, 176		ERX1ANJ3R3
R177, 178		ERG2ANJ331
R179, 180		ERD25TJ105

Ref. No.		Part No.
R181, 182	S	ERD14FJ561
R183		ERD25TJ222
R201	S	ERD14FJ222
R202	S	ERD14FJ472
R203, 204		ERD25TJ102
R205		ERD25TJ101
R206		ERD25TJ561
R207		ERD25TJ271
R301		ERD25TJ103
R302		ERD25TJ392
R303		ERD25TJ332
R304, 305		ERD25TJ683
R306, 307		ERD25TJ223
R308		ERD25TJ223
R309		ERD25TJ153
R310		ERD25TJ183
R311		ERD25TJ393
R312		ERD25TJ564
R313		ERD25TJ223
R314		ERD25TJ681
R315, 316		ERG1ANJ471
R317		ERD25TJ103
R318		ERD25TJ682
R319		ERD25TJ104
R401, 402		ERD25TJ223
R403, 404		ERD25TJ822
R405, 406		ERD25TJ472
R407, 408		ERD25TJ683
R409, 410		ERD25TJ183
R411, 412		ERD25TJ182
R413, 414		ERD25TJ102
R415, 416		ERC14GK825
R417, 418		ERD25TJ822
R419, 420		ERD25TJ221
R421, 422		ERG1ANJ182
R423	S	ERD14FJ101

Ref. No.		Part No.
CAPACITORS		
C101, 102		ECCD1H680K
C103, 104		ECCD1H390K
C105, 106		ECKD1H271KB
C109, 110		ECKD1H680K
C111, 112		ECEA1HS010
C113, 114		ECCD1H060C
C115, 116		ECEA2AS3R3
C117, 118		ECKD1H102ZF
C119, 120		ECEA1AS470
C121, 122		ECKD1H471KB
C123, 124		ECCD2H330K
C125, 126		ECKD1H333ZF
C127, 128		ECCD1H181K
C129, 130		ECCD2H270K
C131, 132		ECKD1H472MD
C133, 134		ECKD1H681KB
C135, 136		ECKD1H223ZF
C137, 138		ECQM1H104KZ
C139, 140	S	ECEA50N1V
C141		ECEA1HS100
C143, 144		ECKD1H333ZF
C145, 146		ECKD1H333ZF
C201, 202		ECET50R682S
C203, 204		ECET50R682S
C205, 206		ECEA1JS101
C207, 208		ECEA1JS330
C209, 210		ECEA1HS100
C211		ECEA1HS100
C212		ECEA1CS330
C213		ECEA50ZR1
C301		ECEA1HS3R3
C302	S	ECEA16N47V
C303		ECEA1AS470
C304		ECEA1AS101
C401, 402		ECEA50ZR22
C403, 404		ECEA16M10R
C405, 406		ECEA1HS100

■ BLOCK DIAGRAM

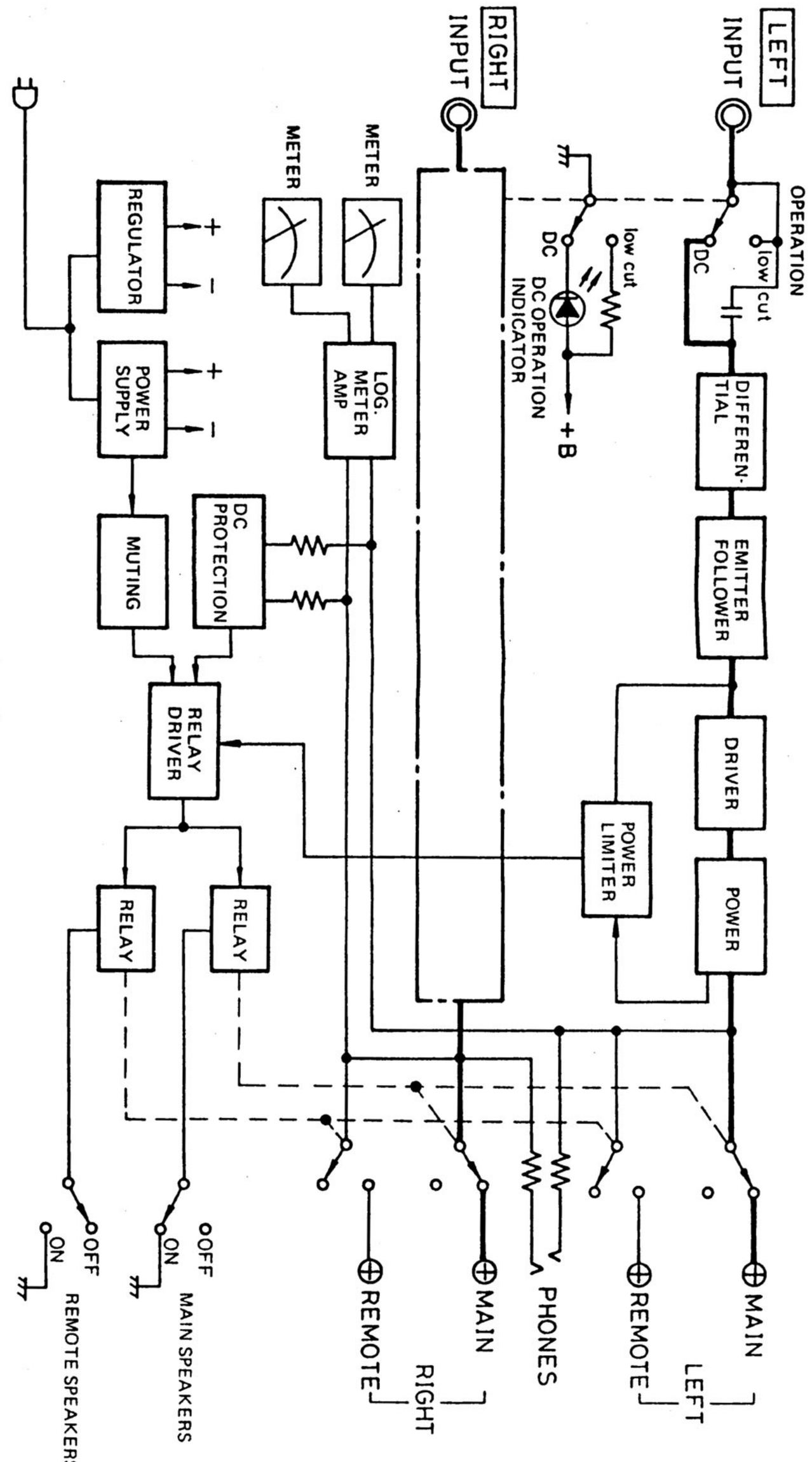

www.hifiengine.com

■ PRINTED CIRCUIT BOARD WIRING VIEW

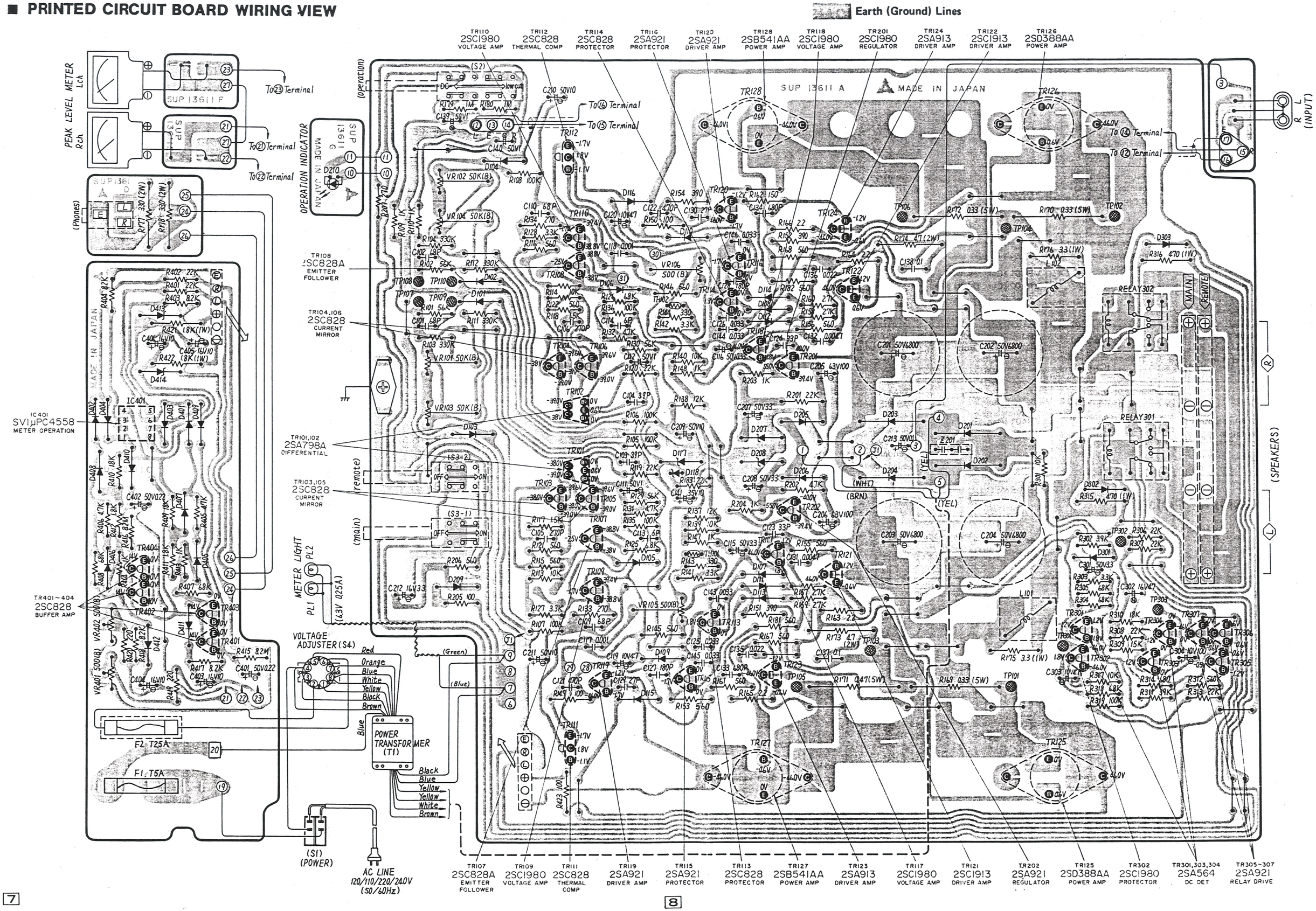

Schematic Diagram ..... Model SE-9021/SE-9021K (D, DG, XGH, XSW, XGF, XE)

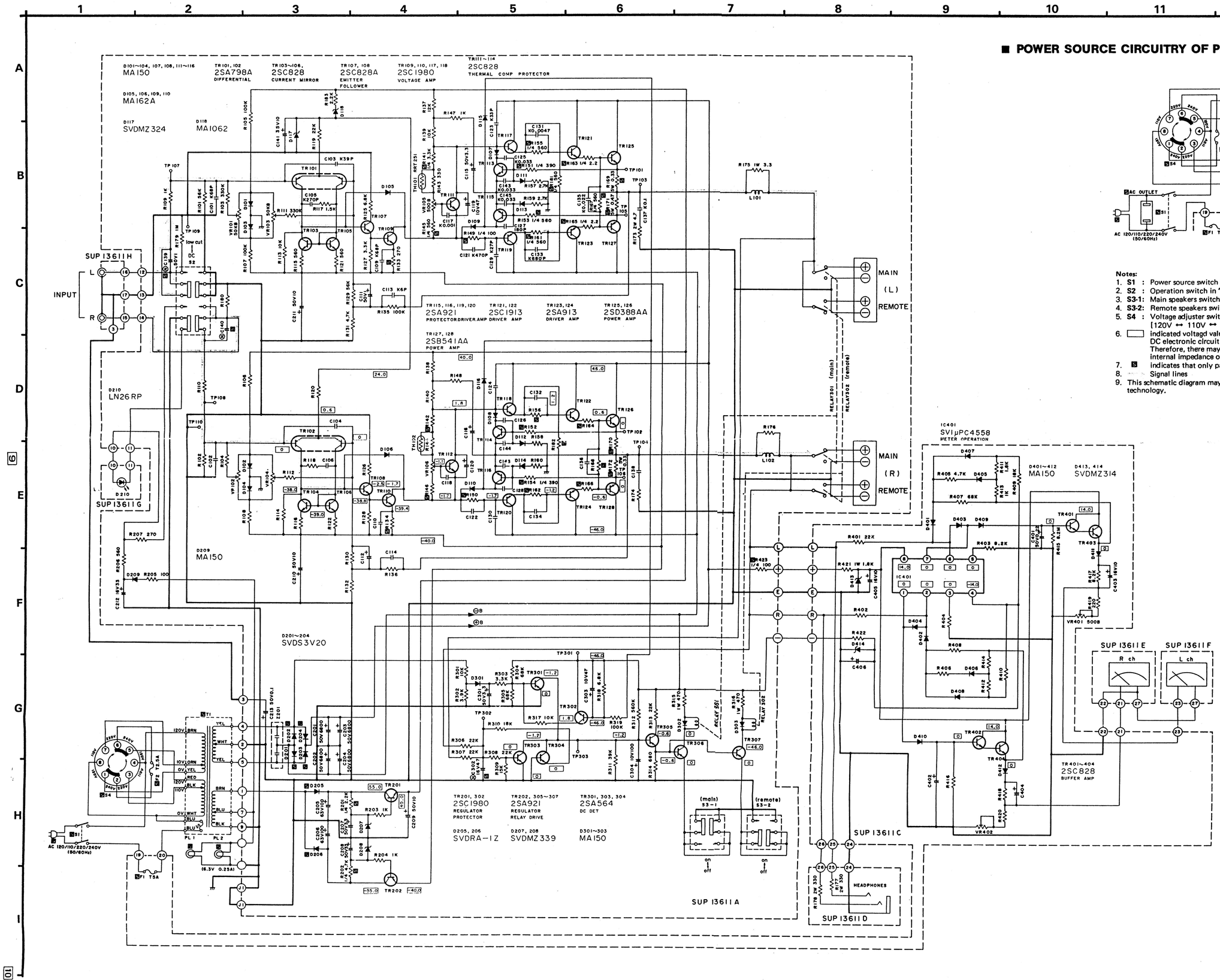

■ POWER SOURCE CIRCUITRY OF PRODUCTS FOR (X) & (XA) ONLY

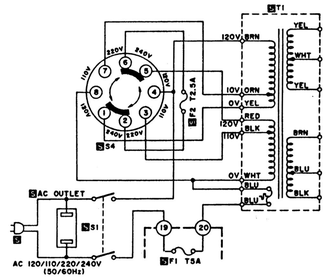

Notes:
1. S1 : Power source switch in "off" position.
2. S2 : Operation switch in "DC" position. [DC ↔ low cut 2Hz)]
3. S3-1: Main speakers switch in "on" position.
4. S3-2: Remote speakers switch in "on" position.
5. S4 : Voltage adjuster switch in "240V" position. [120V ↔ 110V ↔ 220V ↔ 240V]
6. ▭ indicated voltagd values are the standard values for the unit measured by the DC electronic circuit tester (high impedance) with the chassis taken as standard. Therefore, there may exist some errors in the voltage values, depending on the internal impedance of the DC circuit tester.
7. Ⓢ indicates that only parts specified by the manufacturer be used for safety.
8. Signal lines
9. This schematic diagram may be modified at any time with the development of new technology.

■ BLOCK DIAGRAM OF IC

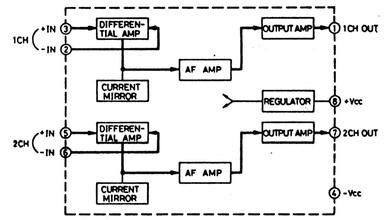

IC401 (SVIμPC4558)

■ TERMINAL GUIDE OF TRANSISTOR & IC

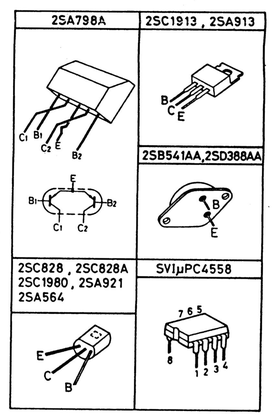

■ EXPLODED VIEW

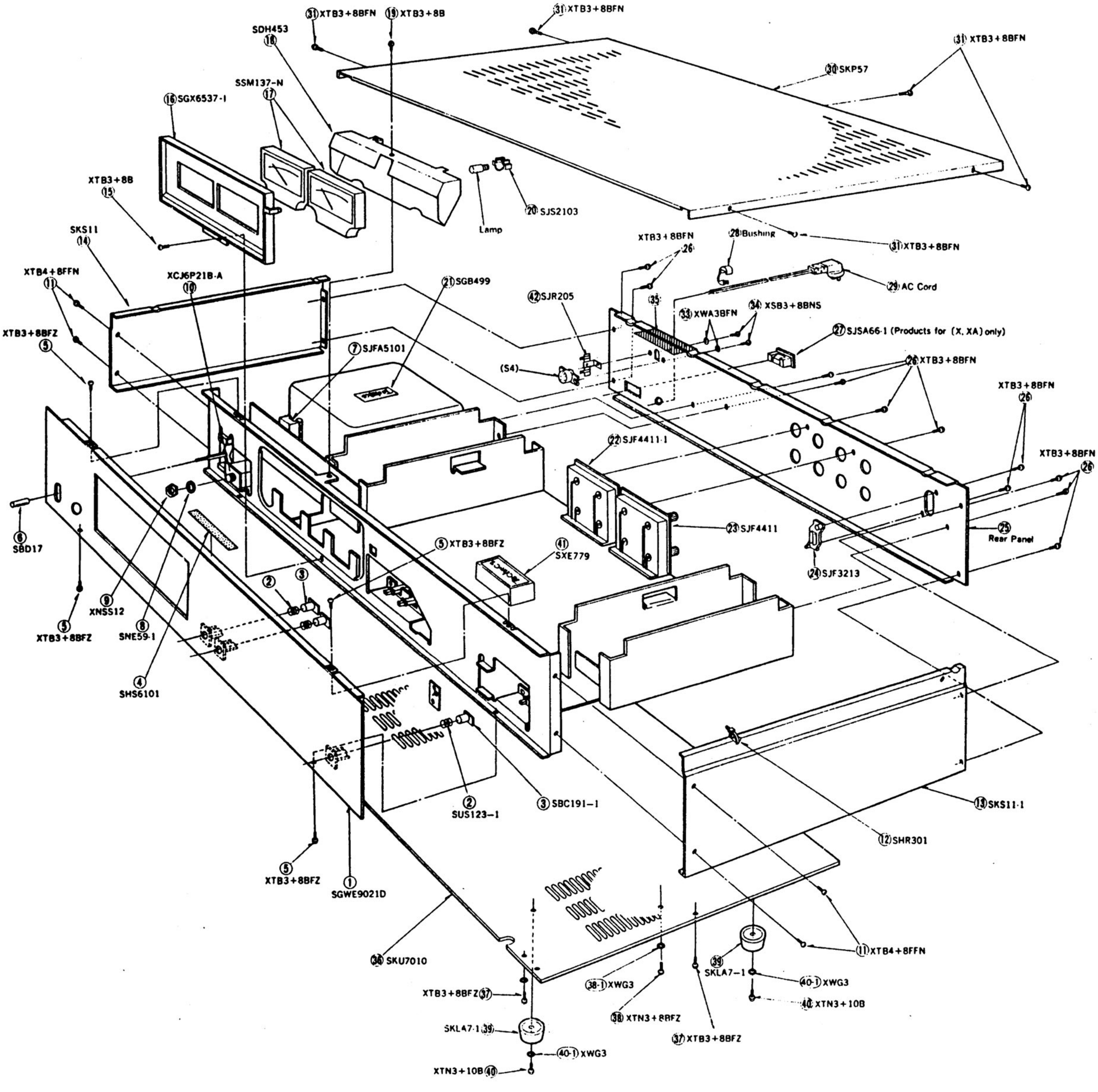

www.hifiengine.com

■ REPLACEMENT PARTS LIST

NOTES:
1. Part numbers are indicated on most mechanical parts. Please use this part number for parts orders.
2. ■ indicates that only parts specified by the manufacturer be used for safety.

Ref. No.		Part No.	Part Name & Description	Per Set		Remarks
			CABINET and CHASSIS PARTS			
1		SGWE9021D	Panel, Front Ass'y	1		○
2		SUS123-1	Spring, Push Switches	3		
3		SBC191-1	Button, Push Switches	3		○
4		SHS6101	Cloth, Front Panel	1		
5		XTB3+8BFZ	Screw, Front Panel M'tg	4		
6		SBD17	Knob, Power Switch	1		
7		SJFA5101	Holder, Fuse (on the meter amp. p.c.b.)	1		
8		SNE59-1	Washer, Headphones Jack	1		
9		XNSS12	Nut, Headphones Jack M'tg	1		
10		XCJ6P21B-A	Jack, Headphones	1		
11		XTB4+8FFN	Screw, Side Board M'tg	4		
12		SHR301	Clamp. Lead Wire	7		
13		SKS11-1	Side Board, Right	1		*
14		SKS11	Side Board, Left	1		*
15		XTB3+8B	Screw, Meter Bracket M'tg	1		
16		SGX6537-1	Bracket, Meter	1		○
17		SSM137-N	Meter	2		
18		SDH453	Bracket, Meter Light	1		*
19		XTB3+8B	Screw, Light Bracket M'tg	1		
20		SJS2103	Holder, Lamp	2		
21		SGB499	Label, Technics	1		*
22		SJF4411-1	Terminal, Left Speaker	1		
23		SJF4411	Terminal, Right Speaker	1		
24		SJF3213	Terminal, Input	1		
25 [D] only		SGP1570A	Rear Panel	1		○
25		SGPE9021D	Rear Panel, SGP1570A with Name Plate (SGT17270)	1		○
25 [X, XA] only		SGP1570-1A	Rear Panel	1		○
26		XTB3+8BFN	Screw, Terminals & Chassis M'tg	11		
27 [X, XA] only		SJSA66-1	Socket, AC Outlet	1		
28		SHR127	Bushing, AC Cord	1		
28 [XE] only		SHR129	Bushing, AC Cord	1		
29	S	SJA97	AC Cord, with Plug	1		
29 [XE] only	S	RJA45ZC	AC Cord	1		
29 [XSW] only	S	SJA111	AC Cord, with Plug	1		
30		SKP57	Top Board	1		
31		XTB3+8BFN	Screw, Top Board M'tg	5		
33		XWA3BFN	Washer, Spring	2		
34		XSB3+8BNS	Screw, Voltage Adjuster M'tg	2		
35		SHS165	Cloth, Protector	1		
36		SKU7010	Bottom Board	1		
37		XTB3+8BFZ	Screw, Bottom Board M'tg	7		
38		XTN3+8BFZ	Screw, Bottom Board M'tg	4		
38-1		XWG3	Washer	4		
39		SKLA7-1	Foot, Bottom Board	4		
40		XTN3+10B	Screw, Feet M'tg	4		
40-1		XWG3	Washer	4		
41		SXE779	Cover, Transistors	1		
42		SJR205	Terminal, AC Cord	1		
		(The products for [X, XA] are not provided)				

* (D) and (DG) are available in Scandinavia and European only.
* (X) and (XA) are available in Asia, Latin America, Middle East and Africa only.
* (XGH) is available in Holland only.
* (XSW) is available in Switzerland only.
* (XGF) is available in France only.
* (XE) is available in United Kingdom only.

SE-9021K (D), (DG), (XGH), (XSW)

Note: This parts list included only the changes of the model SE-9021 part list.

Ref. No.	Change of Part No. SE-9021	→ SE-9021K	Part Name & Description	Per Set (Pcs.)		Remarks
			CABINET and CHASSIS PARTS			
1	SGWE9021D	SGWE9021KD	Panel, Front Ass'y	1		○
3	SBC191-1	SBC191-2	Button, Push Switches	3		○
6	SBD17	SBD17-1	Knob, Power Switch	1		○
11	XTB4+8FFN	XTB4+8FFZ	Screw, Side Board M'tg	4		
13	SKS11-1	SKS11-3	Side Board, Right	1		○
14	SKS11	SKS11-2	Side Board, Left	1		○
16	SGX6537-1	SGX6537-2	Bracket, Meter	1		○
25	SGP1570A [D]	SGP1570B [D] only	Rear Panel, Product for [D] only	1		○
	SGPE9021D	SGPE9021KD [XSW, DG, XGH]	Rear Panel, SGP1570B, with Name Plate (SGT17290)	1		○
	SGP1570-1A [X, XA]					
26	XTB3+8BFN	XTB3+8BFZ	Screw, Terminals & Chassis M'tg	11		
27	SJSA66-1 [X, XA]	Deletion	----------	0		
28	SHR127	SHR127	Bushing, AC Cord	1		
	SHR129 [XE]					
29	SJA97	SJA97 [D, DG, XGH]	AC Cord, with plug	1		
	RJA45ZC [XE]	SJA111 [XSW] only	AC Cord, with Plug (Product for [XSW]) only)	1		
	SJA111 [XSW]					
30	SKP57	SKP57-1	Top Board	1		○
31	XTB3+8BFN	XTB3+8BFZ	Screw, Top Board M'tg	5		
33	XWA3BFN	XWA3BFZ	Washer, Spring	2		
34	XSB3+8BNS	XSB3+8FZS	Screw, Voltage Adjuster M'tg	2		
36	SKU7010	SKU7010-1	Bottom Board	1		○
			ACCESSORIES			
A4	SJP5213-1	Deletion	----------	0		
A5	SJP5215	Deletion	----------	0		
			PACKING PARTS			
P5	SPG1679	SPG1683	Carton Box	1		○
	SPG1681 [XGF]					
P6	SQF1985	SQF1985	Instructions Book, Printed Matter	1		○
	SQF10097					

www.hifiengine.com

■ REPLACEMENT PARTS LIST

NOTES:
1. Part numbers are indicated on most mechanical parts. Please use this part number for parts orders.
2. **S** indicates that only parts specified by the manufacturer be used for safety.

Ref. No.		Part No.	Part Name & Description	Per Set		Remarks
			INTEGRATED CIRCUIT			
IC401		SVIUPC4558C	IC, Meter Operation Amplifier	1		
			TRANSISTORS			
TR101, 102		**2SA798A-G2**	Transistor, Input Differential Amplifier (Use in ranks F2 or G2)	2		
TR103, 104, 105, 106, 107, 108		**2SC1328-T**	Transistor, Current Mirror & Emitter Follower (Use in ranks S, T or U)	6		
TR109, 110		2SC1980-R	Transistor, Pre-Driver (Use in ranks R, S or T)	2		
TR111, 112		**2SC828A-R**	Transistor, Temperature Compensation	2		
TR113, 114		**2SC1328-T**	Transistor, Current Limiter (Use in ranks S, T or U)	2		
TR115, 116		2SA921-R	Transistor, Current Limiter (Use in ranks R, S or T)	2		
TR117, 118		2SC1980-R	Transistor, Driver (in ranks S or R) } Use pair ranks	2		
TR119, 120		2SA921-R	Transistor, Driver (in ranks S or R) } Use pair ranks	2		
TR121, 122		2SC1913-Q	Transistor, Driver (in ranks Q or R) } Use pair ranks	2		
TR123, 124		2SA913-Q	Transistor, Driver (in ranks Q or R) } Use pair ranks	2		
TR125, 126		2SD388AA-Q	Transistor, Power (in ranks Q, R or S) } Use pair ranks	2		
TR127, 128		2SB541AA-Q	Transistor, Power (in ranks Q, R or S) } Use pair ranks	2		
TR201, 302		2S1980-R	Transistor, Regulator & Relay Switching (Use in ranks R, S or T)	2		
TR202, 305 306, 307		2SA921-R	Transistor, Regulator & Relay Switching (Use in ranks R, S or T)	4		
TR301, 303, 304		**2SA666AI-R**	Transistor, DC Detector (Use in ranks P, Q or R)	3		
TR401, 402, 403, 404		**2SC1328-T**	Transistor, Meter Logarithm Amplifier (Use in ranks R, S or T)	4		
			DIODES			
D101 ~ 104, 107, 108, 111 ~ 116		MA150	Diode, Bias Supply	12		
D105, 106, 109, 110		MA162A	Diode	4		
D117		SVDMZ324	Diode, 24V Zener	1		
D118		MA1062	Diode, 6.2V Zener	1		
D201 ~ 204	S	SVDS3V20	Rectifier	4		
D205, 206	S	**SM112**	Rectifier	2		
D207, 208		SVDMZ339B	Diode, 39V Zener	2		
D209, 301 ~ 303, 401 ~ 412		MA150	Diode, Power Muting, Pulse Killer & Meter Logarithm Amplifier Circuit	16		
D210		LN26RP	Light Emitting Diode, Operation Indicator	1		
D413, 414		SVDMZ314	Diode, 14 Zener	2		
			COILS and TRANSFORMER			
L101, 102		SLQY15G-3U	Coil, Characteristic Compensation	2		
T1	S	SLT9Q3	Transformer, Power	1		O
			COMPONENT COMBINATION			
Z201		EXRFS203ZSA	Component Combination, Noise Killer	1		
			THERMISTERS			
TH101, 102		RRT251	Thermister, Temperature Compensation	2		
			VARIABLE RESISTORS			
VR101, 102, 103, 104		**EVLS3AA00B54**	DC Balance Adjustment, 50kΩ (B)	4		
VR105, 106		**EVLS3AA00B52**	ICQ Adjustment, 500Ω (B)	2		
VR401, 402		**EVLS0AA00B52**	Meter Adjustment, 500Ω (B)	2		
			LAMPS			
PL1, 2	S	XAMR62SA	Pilot Lamp, 6.3V 0.25A	2		
			FUSES			
F1	S	XBA2C50TR0	Fuse, T5A (250V) Power Source	1		
F2	S	XBA2C25TR0	Fuse, T2.5A (250V) Power Source	1		
			SWITCHES			
S1	S	ESL21179	Switch, Power Source	1		
S2		SSH93	Switch, Operation	1		
S3		SSH249	Switch, Speakers	1		
S4	S	ESE37200	Switch, Voltage Adjuster	1		
			RELAY			
RLY301, 302	S	SSY19-1	Relay, Speaker	2		

www.hifiengine.com

Ref. No.		Part No.	Part Name & Description	Per Set		Remarks
ACCESSORIES						
A1		SKL117	Foot	4		
A2		XTN3+6B	Screw, Feet M'tg } XTW3+6B	4		
A3		XWG3	Washer } XTW3+6B	4		
A4 [X, XA] only	S	SJP5213-1	Plug Adapter, AC Power	1		
A5 [X, XA] only	S	SJP5215	Plug Adapter, AC Power	1		
PACKING PARTS						
P1		SPP551	Polyethylene Bag	1		
P2		SPS1839	Pad, Left Side	1		O
P3		SPS1841	Pad, Right Side	1		O
P4		SPS1829	Pad, Upper Side	1		O
P5		SPG1679	Carton Box	1		O
P5 [XGF] only		SPG1681	Carton Box	1		O
P6		SQF1985	Instructions Book, Printed Matter	1		O
P6 [X, XA] only		SQF10097	Instructions Book, Printed Matter	1		O

■ ACCESSORIES

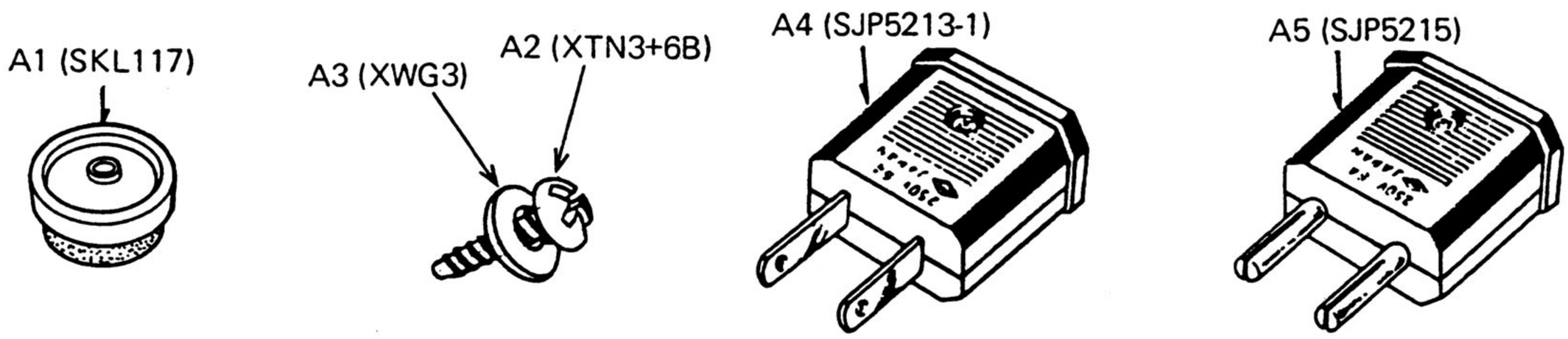

■ PACKINGS

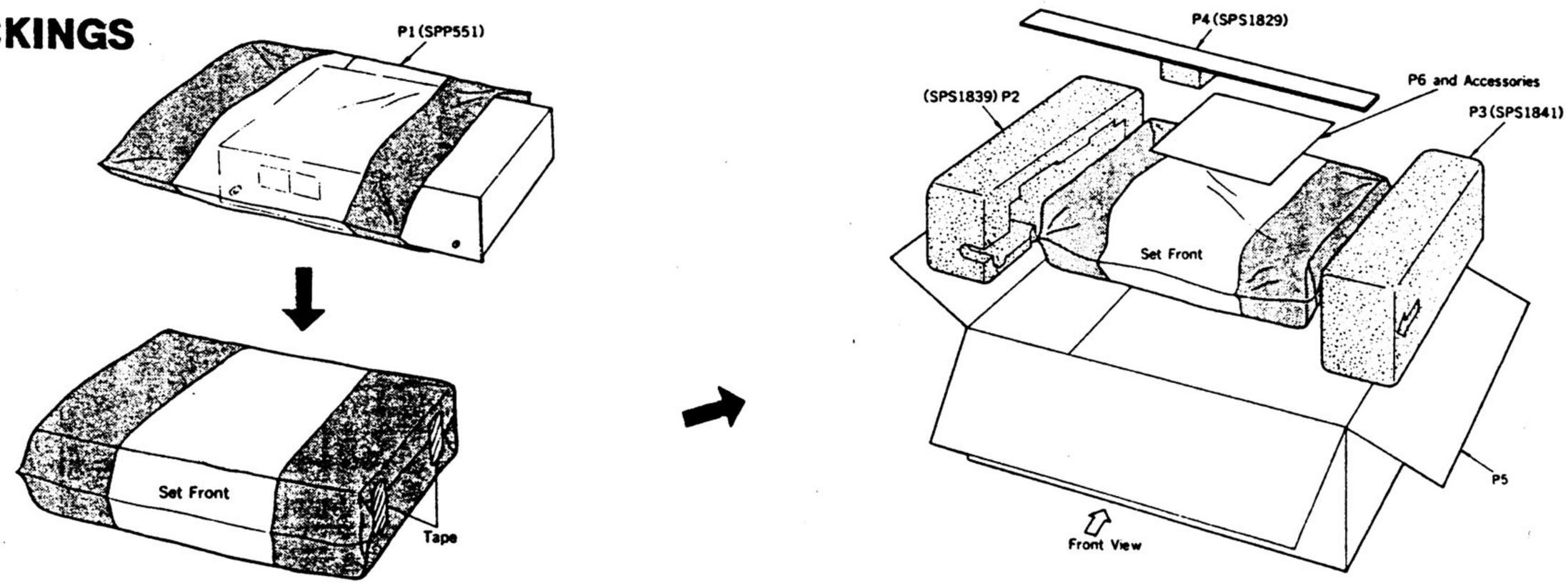

■ ATTACHMENT OF FEET (INCLUDED)

This unit has an extra set of 4 feet which, if installed, lower the height by 5mm, to 93mm.
These feet are especially useful if other audio components in this series (models SU-9011 and ST-9031) are stacked one on top of another.

• Attachment

① Remove the feet alread'y attached to the bottom of the unit.

② Attach the other set of feet (included) by using the screws (also included). Use the same holes as for the original feet.

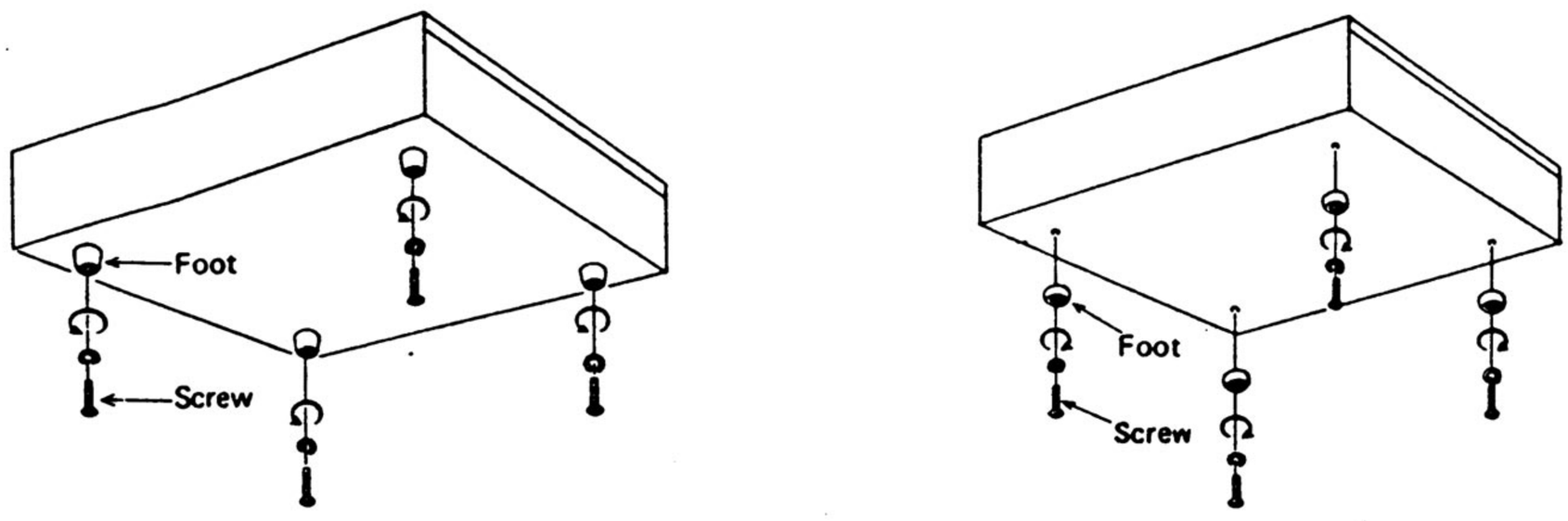

Printed in Japan
7807-5000 Ⓐ

www.hifiengine.com