ORDER NO. HAD8602343C0
A2

Service Manual

Stereo Integrated Amplifier

Amplifier

SU-V40

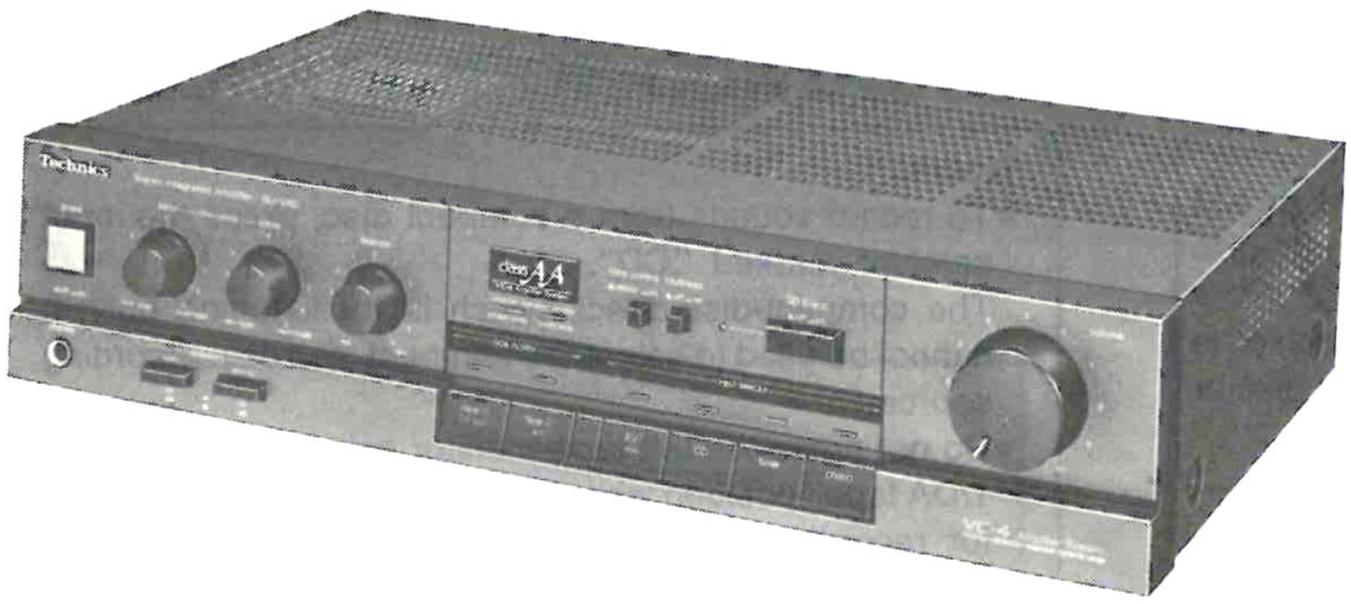

Color	Area
(K)	[M] ..... U.S.A.
(K)	[MC] .... Canada
(K)(S)	[E] ..... Continental Europe
(K)(S)	[EH] .... Holland
(K)(S)	[EB] .... Belgium
(K)(S)	[EF] .... France
(K)(S)	[EK] .... United Kingdom
(K)(S)	[EGA] ... F.R. Germany
(K)(S)	[Ei] ..... Italy
(K)(S)	[XL] .... Australia
(K)(S)	[XA] .... Asia, Latin America, Middle Near East, Africa & Oceania

Color

(K)	Black Type
(S)	Silver Type

SPECIFICATIONS

(* Refer to next page, specification of DIN 45 500)

(IHF '78)

■ MAIN AMPLIFIER SECTION (input signal: EXT INPUT)

Rated minimum sine wave RMS power output	
20 Hz ~ 20 kHz both cahnnels driven	
0.003% total harmonic distortion	50W per channel (8 ohms)
1 kHz continuous power output	
both channels driven	
0.0009% total harmonic distortion	50W per channel (8 ohms)
0.005% total harmonic distortion	50W per channel (4 ohms)
Dynamic headroom	1.2 dB (8 ohms)
	1.9 dB (4 ohms)
Total harmonic distortion	
rated power at 20 Hz ~ 20 kHz	0.003% (8 ohms)
half power at 20 Hz ~ 20 kHz	0.003% (8 ohms)
half power at 1 kHz	0.0008% (8 ohms)
SMPTE intermodulation distortion	0.009% (8 ohms)
Low frequency damping factor	60 (8 ohms)
	30 (4 ohms)
Load impedance	
MAIN or REMOTE	4 ~ 16 ohms
MAIN and REMOTE	8 ~ 16 ohms
Headphones output impedance	330 ohms

■ PRE AMPLIFIER SECTION

Frequency response	
PHONO	RIAA standard curve ±0.8 dB
TUNER, CD, AV/AUX, TAPE 1/DA TAPE	
TAPE 2/EXT	5 Hz ~ 120 kHz, –3 dB
	20 Hz ~ 20 kHz, +0 dB, –0.2 dB
Input sensitivity	
PHONO	0.25 mV (2.5 mV, IHF '66)
TUNER, CD, AV/AUX, TAPE 1/DA TAPE	
TAPE 2/EXT	15 mV (150 mV, IHF '66)
S/N (IHF, A)	
PHONO	76 dB (81 dB, IHF '66)
TUNER, CD, AV/AUX, TAPE 1/DA TAPE,	
TAPE 2/EXT	81 dB (100 dB, IHF '66)
Maximum input voltage	
PHONO	150 mV (160 mV, 1 kHz)
Input impedance	
PHONO	47 kilohms
TUNER, CD, AV/AUX, TAPE 1/DA TAPE,	
TAPE 2/EXT	22 kilohms
Tone controls	
bass	50 Hz, +10 dB ~ –10 dB
treble	20 kHz, +10 dB ~ –10 dB
Loudness control (volume at –30 dB)	50 Hz, +9 dB
Output voltage	
TAPE 1/DA TAPE, TAPE 2/EXT, REC OUT	150 mV

■ GENERAL

Power consumption	250W, 300 VA
Power supply	AC 120V, 60 Hz
Dimensions (WxHxD)	430 x 97 x 290 mm (16-15/16" x 3-27/32" x 11-7/16")
Weight	6.3 kg (13.9 lbs.)

Note:
Total harmonic distortion is measured by the digital spectrum analyzer (H.P. 3045 system).

Specifications are subject to change without notice for further improvement.

Technics

Matsushita Service Company
50 Meadowland Parkway,
Secaucus, New Jersey 07094

Panasonic Sales Company,
Division of Matsushita Electric
of Puerto Rico, Inc.
Ave. 65 De Infanteria, KM 9.7
Victoria, Industrial Park
Carolina, Puerto Rico 00630

Panasonic Hawaii, Inc.
91-238 Kauhi St., Ewa Beach
P.O. Box. 774
Honolulu, Hawaii 96808-0774

Matsushita Electric
of Canada Limited
5770 Ambler Drive, Mississauga,
Ontario, L4W 2T3

Matsushita Electric Trading Co., Ltd:
P.O. Box 288, Central Osaka Japan

www.hiflengine.com

SPECIFICATIONS

(DIN 45 500)

AMPLIFIER SECTION

1 kHz continuous power output	
both channels driven	2×70 W (4Ω)
	2×65 W (8Ω)
20 Hz~20 kHz continuous power output	
both channels driven	2×50 W (4Ω)
	2×50 W (8Ω)
Total harmonic distortion	
rated power at 20 Hz~20 kHz	0.02% (4Ω)
	0.003% (8Ω)
rated power at 1 kHz	0.005% (4Ω)
	0.0009% (8Ω)
half power at 20 Hz~20 kHz	0.003% (8Ω)
half power at 1 kHz	0.0008% (8Ω)
Intermodulation distortion	
rated power at 250 Hz: 8 kHz=4:1, 8Ω	0.03%
rated power at 60 Hz: 7 kHz=4:1, SMPTE, 8Ω	0.009%
Power bandwidth	
both channels driven, −3 dB	5 Hz~60 kHz (4Ω, 0.08%)
	5 Hz~65 kHz (8Ω, 0.05%)
Residual hum and noise	0.8 mV
Damping factor	30 (4Ω), 60 (8Ω)
Input sensitivity and impedance	
PHONO	2.5 mV/47 kΩ
TUNER, CD, AV/AUX, TAPE 1/DA TAPE, TAPE 2/EXT	150 mV/22 kΩ
PHONO maximum input voltage (1 kHz, RMS)	160 mV
S/N	
rated power (4Ω)	
PHONO	76 dB (IHF, A: 81 dB, input 2.5 mV)
TUNER, CD, AV/AUX, TAPE 1/DA TAPE, TAPE 2/EXT	91 dB (IHF, A: 100 dB)
Frequency response	
PHONO	RIAA standard curve ±0.8 dB (30 Hz~15 kHz)
TUNER, CD, AV/AUX, TAPE 1/DA TAPE, TAPE 2/EXT	5 Hz~120 kHz (−3 dB) +0, −0.2 dB (20 Hz~20 kHz)
Tone controls	
BASS	50 Hz, +10 dB~−10 dB
TREBLE	20 kHz, +10 dB~−10 dB
Loudness control (volume at −30 dB)	50 Hz, +9 dB
Output voltage and impedance	
REC OUT	150 mV
Channel balance, AV/AUX 250 Hz~6,300 Hz	±1 dB
Channel separation, AV/AUX 1 kHz	60 dB
Headphones output level and impedance	450 mV/330Ω
Load impedance	
MAIN or REMOTE	4Ω~16Ω
MAIN and REMOTE	8Ω~16Ω

GENERAL

Power consumption	380W
Power supply	
For United Kingdom and Australia	AC 50 Hz/60 Hz, 240 V
For continental Europe	AC 50 Hz/60 Hz, 220 V
For others	AC 50 Hz/60 Hz, 110 V/127 V/220 V/240 V
Dimensions (W×H×D)	430×97×290 mm (16-15/16"×3-27/32"×11-7/16")
Weight	6.3 kg (13.9 lb.)

Note:
Total harmonic distortion is measured by the digital spectrum analyzer (H.P. 3045 system).

Specifications are subject to change without notice. Weight and dimensions shown are approximate.

SAFETY PRECAUTION (This "safety precaution" is applied only in U.S.A.)

1. Before servicing, unplug the power cord to prevent an electric shock.
2. When replacing parts, use only manufacturer's recommended components for safety.
3. Check the condition of the power cord. Replace if wear or damage is evident.
4. After servicing, be sure to restore the lead dress, insulation barriers, insulation papers, shields, etc.
5. Before returning the serviced equipment to the customer, be sure to make the following insulation resistance test to prevent the customer from being exposed to a shock hazard.

• INSULATION RESISTANCE TEST

1. Unplug the power cord and short the two prongs of the plug with a jumper wire.
2. Turn on the power switch.
3. Measure the resistance value with ohmmeter between the jumpered AC plug and each exposed metal cabinet part, such as screwheads antenna, control shafts, handle brackets, etc. Equipment with antenna terminals should read between 3MΩ and 5.2MΩ to all exposed parts. (Fig. A) Equipment without antenna terminals should read approximately infinity to all exposed parts. (Fig. B)

Note: Some exposed parts may be isolated from the chassis by design. These will read infinity.

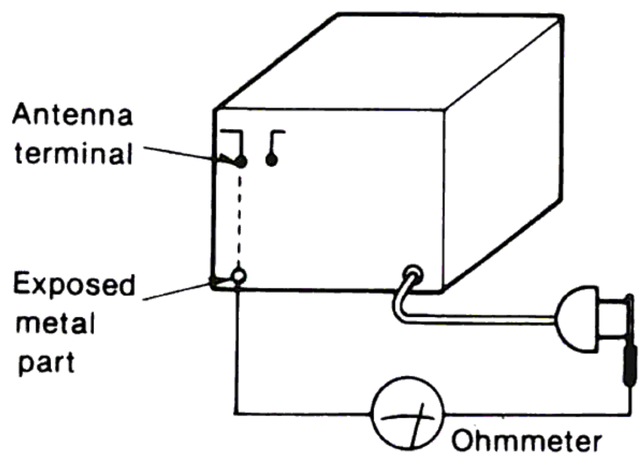

(Fig. A)

Resistance = 3MΩ—5.2MΩ

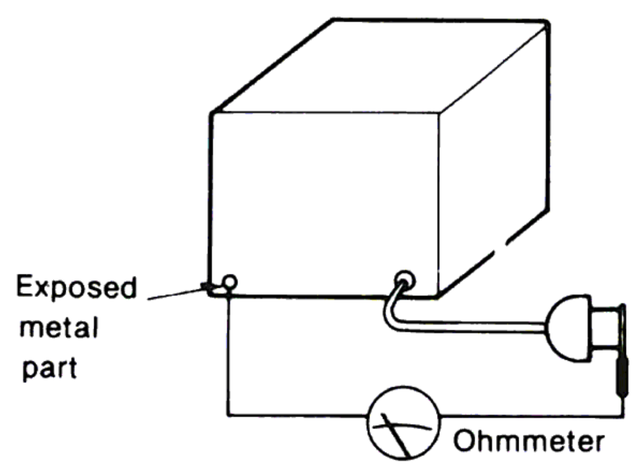

(Fig. B)

Resistance = Approx ∞

4. If the measurement is outside the specified limits, there is a possibility of a shock hazard. The equipment should be repaired and rechecked before it is returned to the customer.

www.hifiengine.com

CONTENTS

	Page
SAFETY PRECAUTION	2
LOCATION OF CONTROLS	3
PROTECTION CIRCUITRY	4
BEFORE REPAIR AND ADJUSTMENT	4
DISASSEMBLY INSTRUCTIONS	5, 6
MEASUREMENTS AND ADJUSTMENTS	6
BLOCK DIAGRAM	7, 8
PRINTED CIRCUIT BOARDS AND WIRING CONNECTION DIAGRAM	9 ~ 13
SCHEMATIC DIAGRAM	14 ~ 18
REPLACEMENT PARTS LIST	19, 20
EXPLODED VIEW	21, 22

LOCATION OF CONTROLS

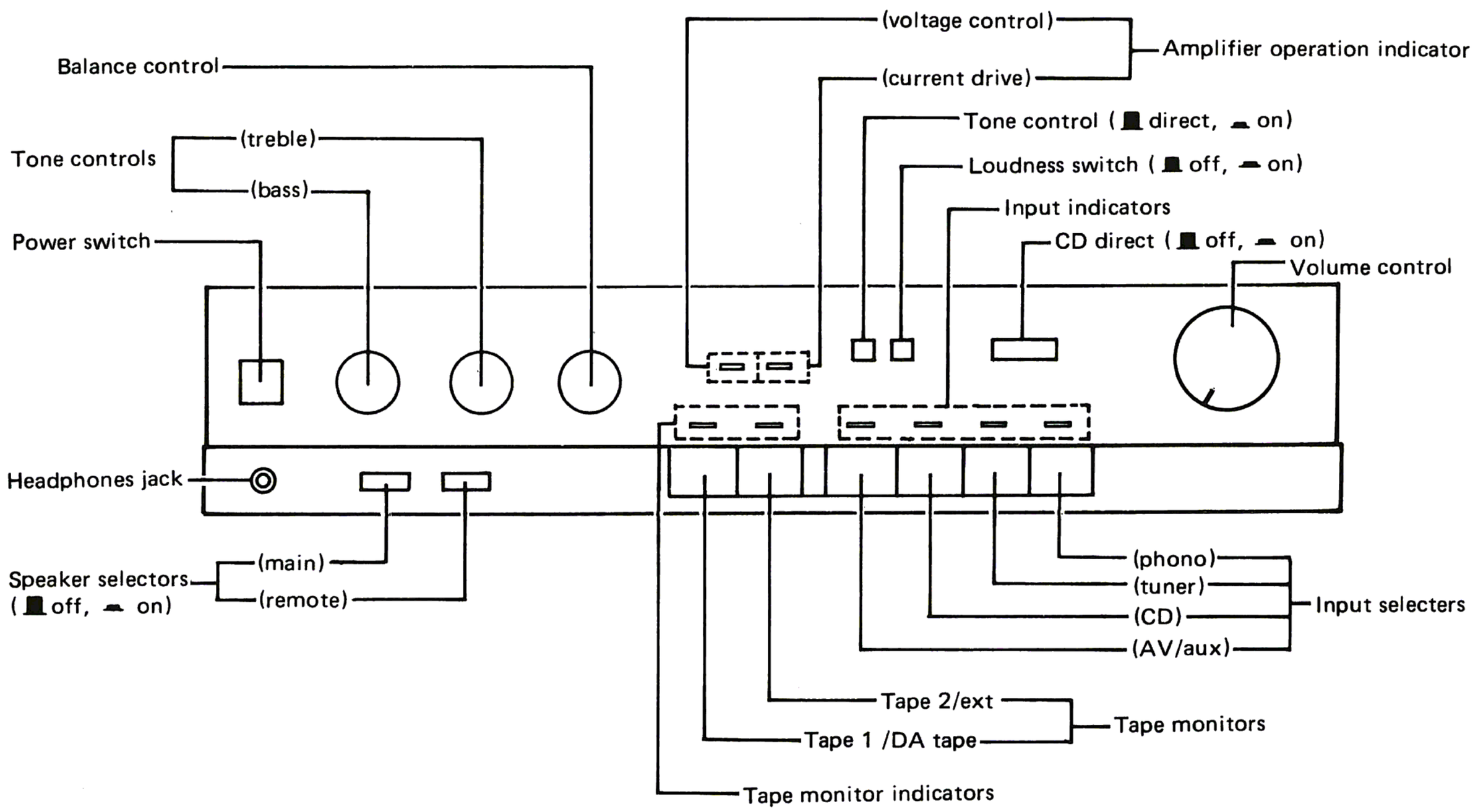

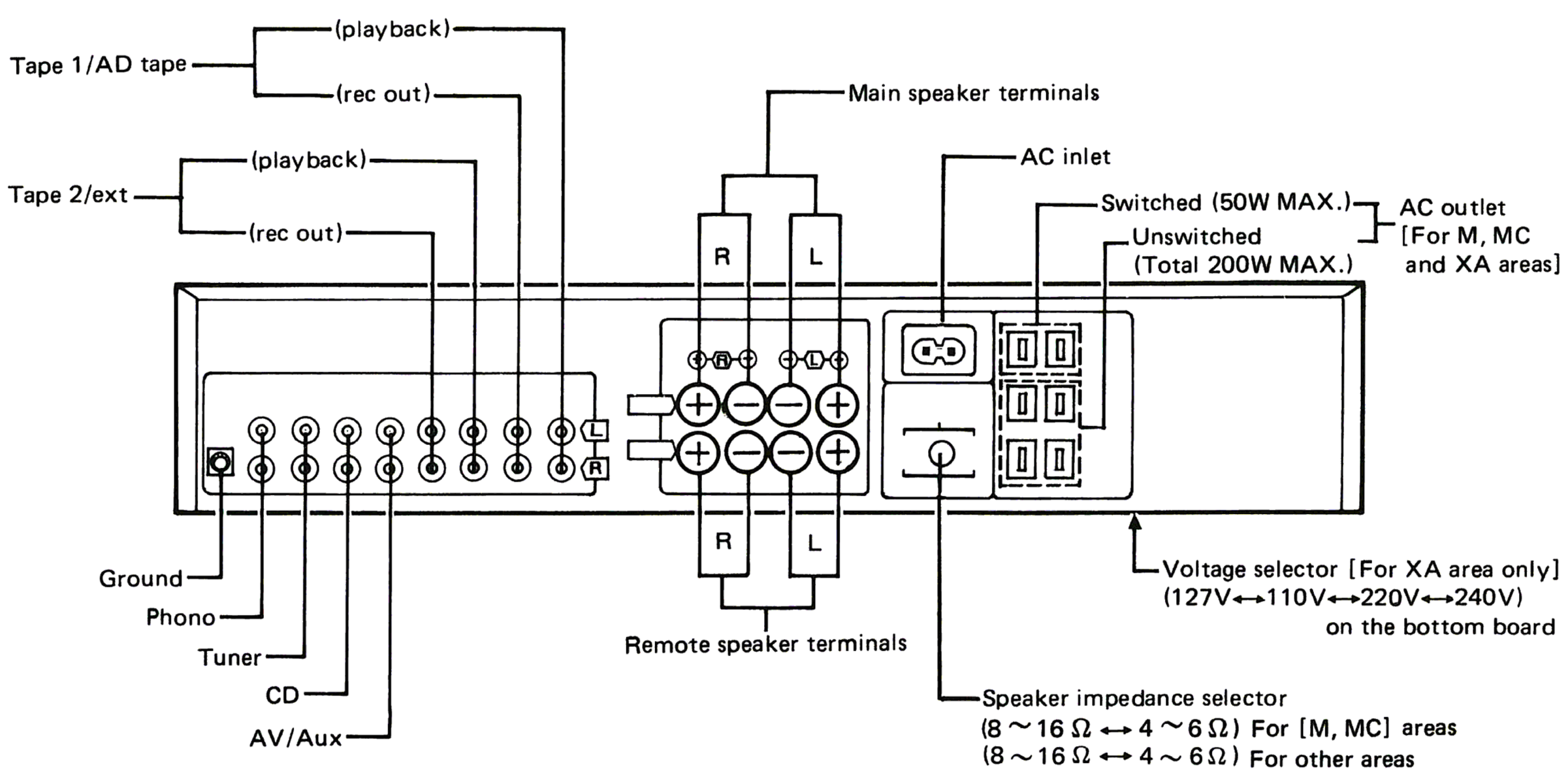

www.hifiengine.com

- The power supply for this unit varies depending upon the areas. Also, the parts used for power supply are different. So, refer to the circuit diagram and replacement parts list.

* [M] [MC] area is provided with AC outlets.
* 120V (60Hz) for U.S.A.
* [XA] area is provided with voltage selector and AC outlets.
* 240V (50/60Hz) for Australia and United Kingdom.
* 220V (50/60Hz) for Continental Europe.
* 110V/127V/220V/240V (50/60Hz) for other [XA] area.
* Phono input capacitance is about 150pF.

Suggestions

- If noise is very annoying while listening to an FM or AM broadcast, switch OFF the video disc player, compact-disc player and turntable.
- Switch OFF the video disc player power if noise is excessive while listening to an audio tape, compact disc or regular phono disc.

Notes:

- To record sounds from a compact disc, press the input selector marked "CD".
  The compact-disc-direct switch is for listening only; it cannot be used to select the compact disc as a recording source.
- Do not press the left tape-monitor selector to the "tape 1/DA tape" position while two tape decks are being used for recording or while tape deck 2 is being used for recording.
  This will cause interruptions in the sound and change the recorded signal.

■ PROTECTION CIRCUITRY

The protection circuitry may have operated if either of the following conditions is noticed:

- No sound is heard when the power is switched ON.
- Sound stops during a performance.

The function of this circuitry is to prevent circuitry damage if, for example, the positive and negative speaker connection wires are "shorted" , or if speaker systems with an impedance less than the indicated rated impedance of this unit are used.
If this occurs, follow the procedure outlined below:

1. Switch OFF the power.
2. Determine the cause of the problem and correct it.
3. Switch ON the power once again.

Note:
When the protection circuitry functions, the unit will not operate unless the power is first switched OFF and then ON again.

■ BEFORE REPAIR AND ADJUSTMENT

(1) Turn off the power supply. Using a 10Ω, 5W resistor, shortcircuit both ends of power supply capacitors (C503, C504, 6800μF) in order to discharge the voltage.

(2) Before turning the power supply on, after completion of repair, slowly apply the primary voltage by using a power supply voltage controller to make sure that the consumed current at 50/60 Hz in NO SIGNAL mode should be shown below with respect to supply voltage 110V/120V/127V/220V/240V.

Power supply voltage	AC110V	AC120V	AC127V	AC220V	AC240V
Consumed current 50/60Hz	260 ~ 380mA	230 ~ 350mA	230 ~ 350mA	110 ~ 230mA	80 ~ 200mA

www.hifiengine.com

■ DISASSEMBLY INSTRUCTIONS

Ref. No. 1	How to remove the cabinet
Procedure 1	● Remove the 6 setscrews (❶ ~ ❻).

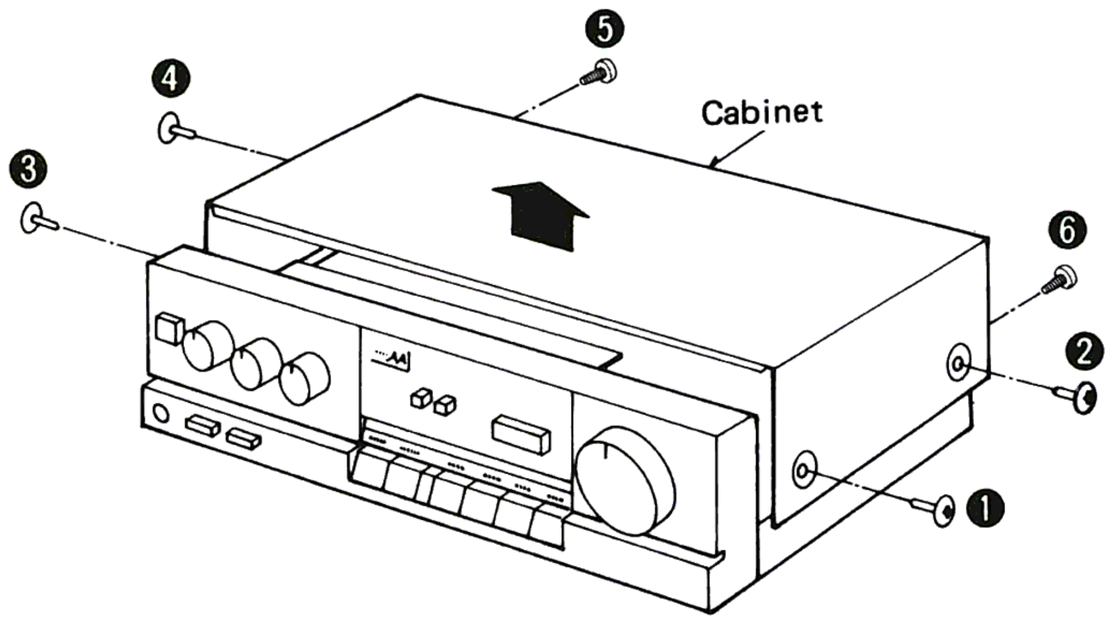

Ref. No. 2	How to remove the front panel and sub P.C.B.
Procedure 1 → 2	1. Remove the connector (J1, J3, J6, J7, J8.) 2. Remove the 1 lock pin (❶).

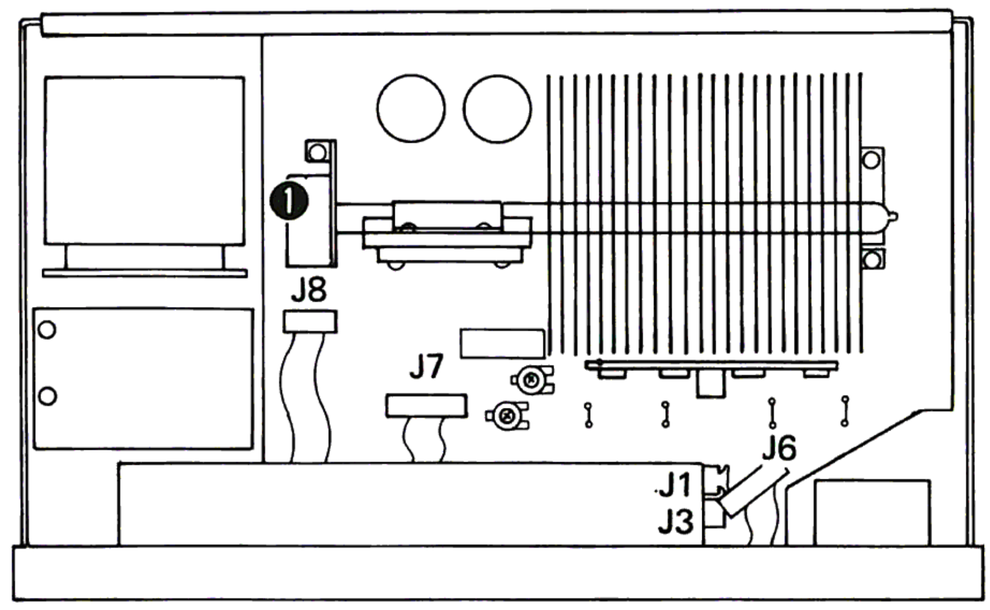

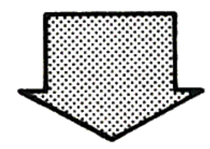

3. Remove the 3 screws (❷ ~ ❹).
   and 4 nuts (❺ ~ ❽).
4. Remove the front panel.

5. Remove the 2 screws (❾, ❿).
6. Remove the tone and main volume P.C.B.
7. Remove the 3 screws (⓫ ~ ⓭).
8. Remove the LED P.C.B.
9. Remove the 1 screw (⓮) and Release the 2 tabs of headphones P.C.B.
10. Remove the headphones P.C.B.

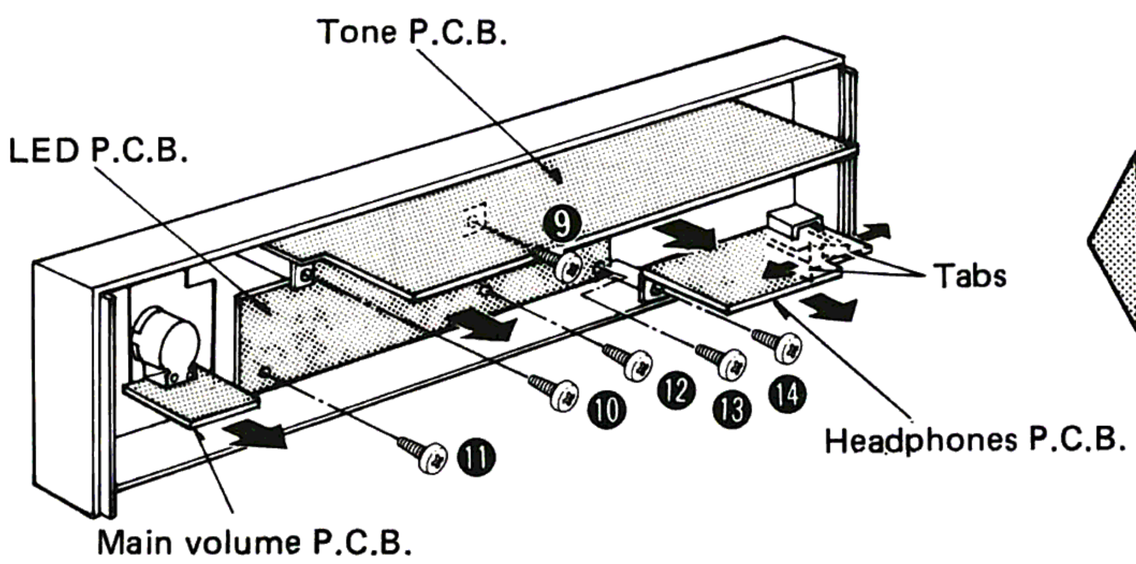

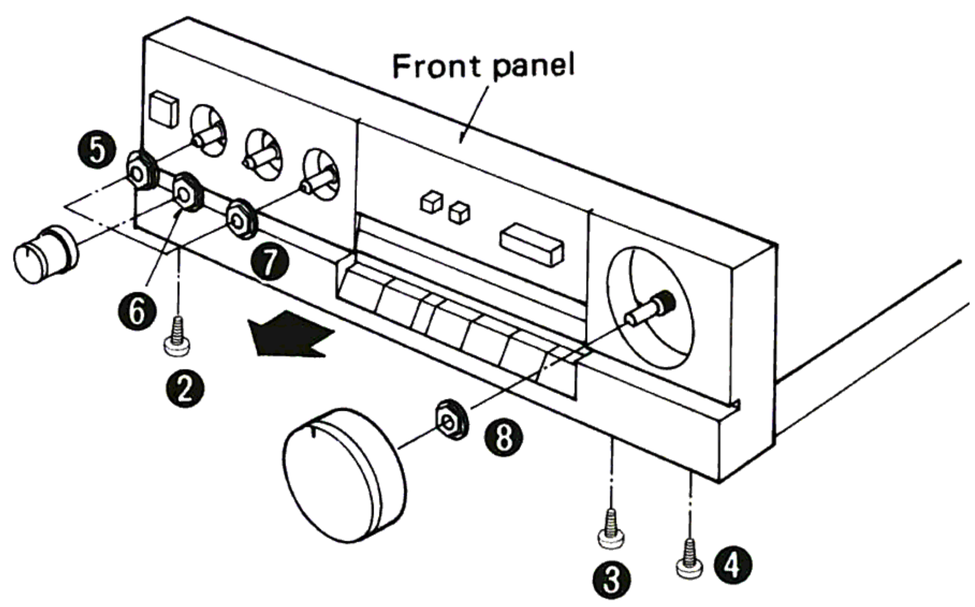

Ref. No. 3	How to remove the fuse and main P.C.B.
Procedure 1 → 2 → 3	1. Remove the 3 screws (❶ ~ ❸). 2. Remove the fuse P.C.B. 3. Remove the 6 screws (❹ ~ ❾).

4. Remove the 5 screws (❿ ~ ⓮).

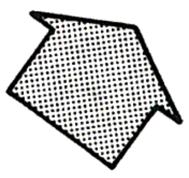

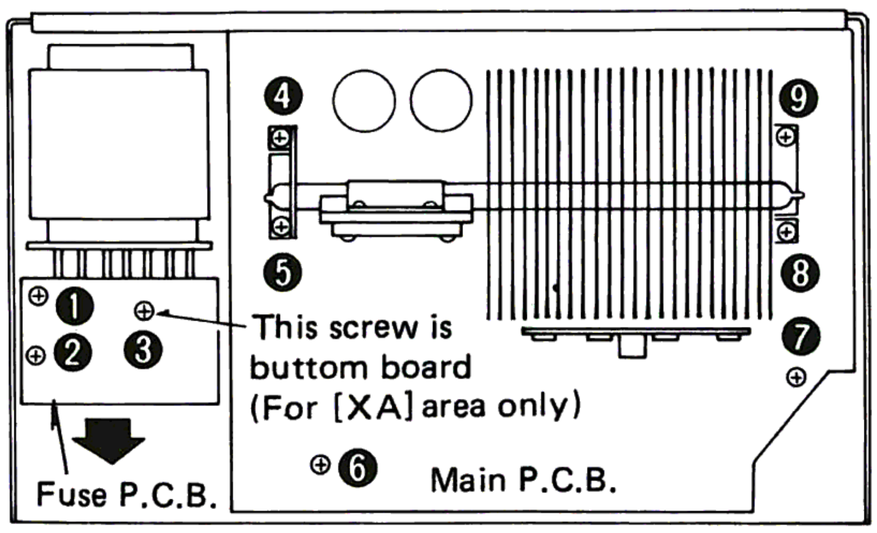

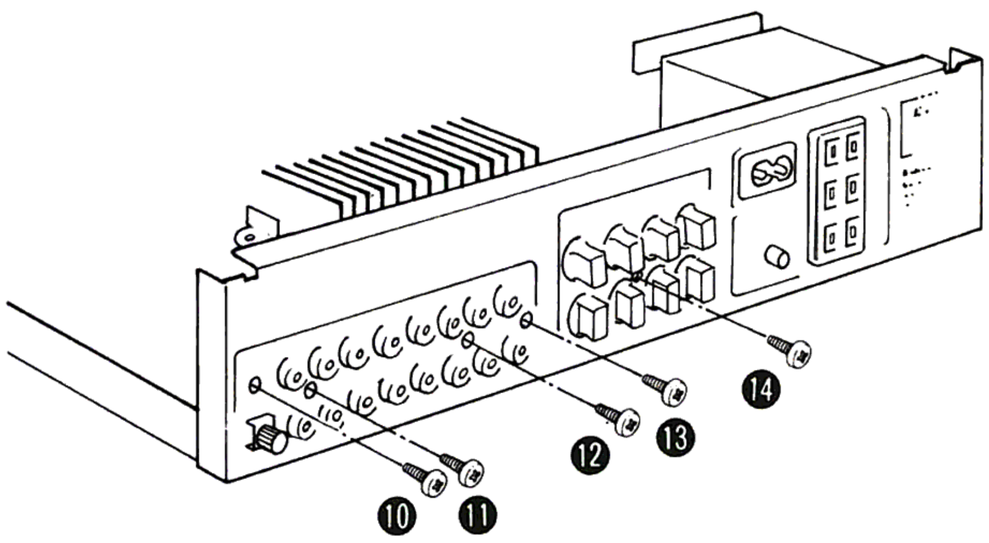

www.hifiengine.com

5. Remove the main P.C.B.

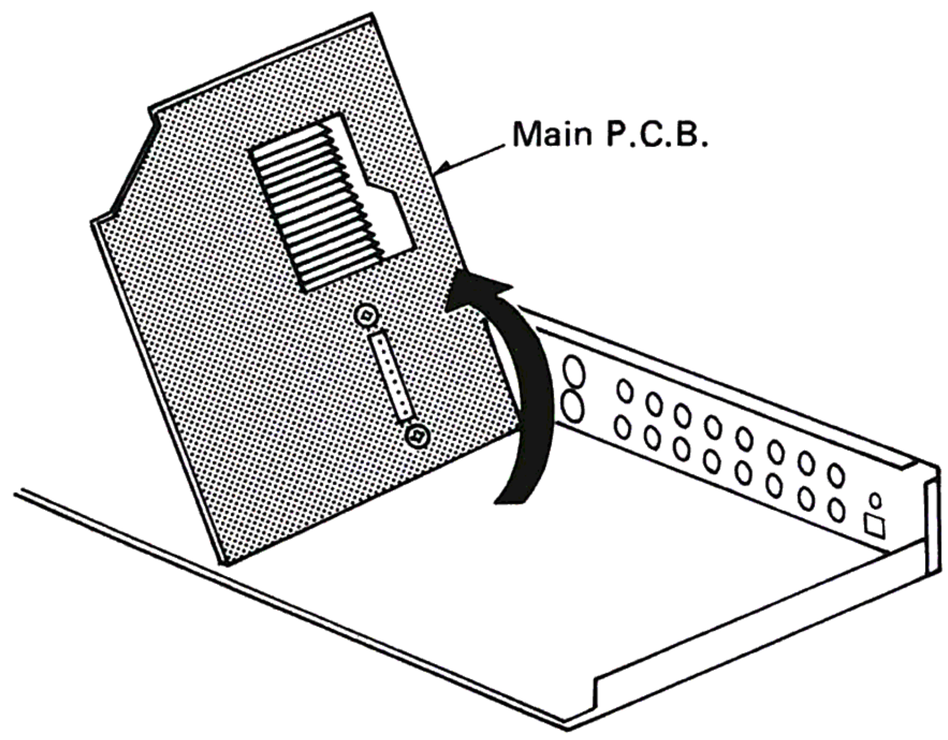

Ref. No. 4	How to remove the power IC
Procedure	1. Unsolder the power IC. 2. Remove the 2 screws (❶, ❷).

- When mounting the power amplifier IC, apply silicon compound (SZZ0L15) to the rear of the power amplifier IC.

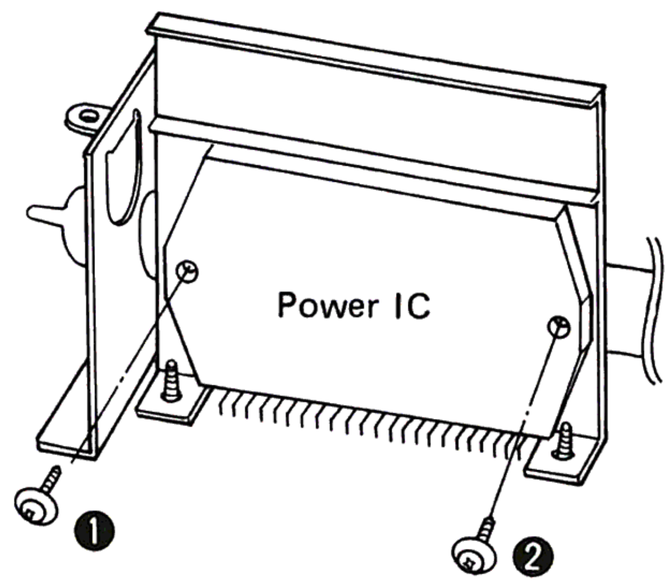

■ MEASUREMENTS AND ADJUSTMENTS

Control positions and equipment used.

- Volume knob . . . . . ∞ (Minimum)
- Main speaker selector . . . . . off
- Remote speaker selector . . . . . off
- Speaker impedance switch . . . . . 8Ω ~ 16Ω
- DC electronic voltmeter (EVM)

IDLING (ICQ) ADJUSTMENT

1. Test equipment connection is shown in figure. Connect the DC EVM. on both channels.)
2. Turn the ICQ control volume (**VR301**, **VR302**) counter-clockwise.
3. Turn ON the set when it is cold, and 15 sec. later, adjust **VR301** and **VR302** so that the voltage is **30mV**. Also, check that the voltage is **18 – 47mV** (standard: **44mV**) after lapse of **10 – 15 minutes.** (Below **50mV** after lapse of **60 min.**).

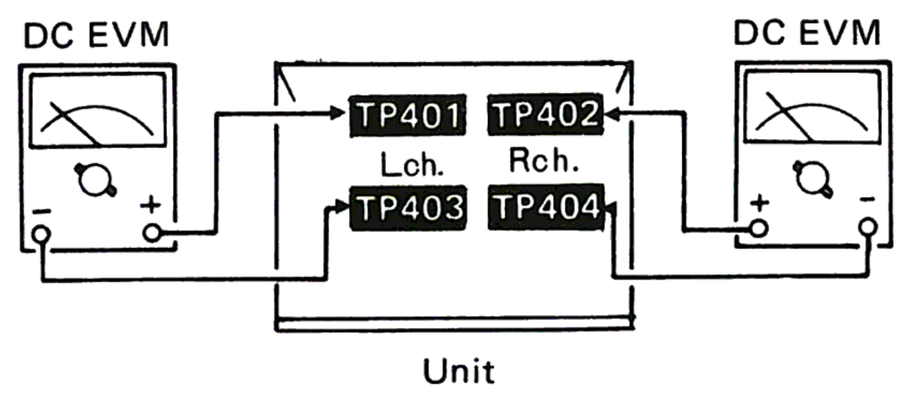

- **Adjustment points**

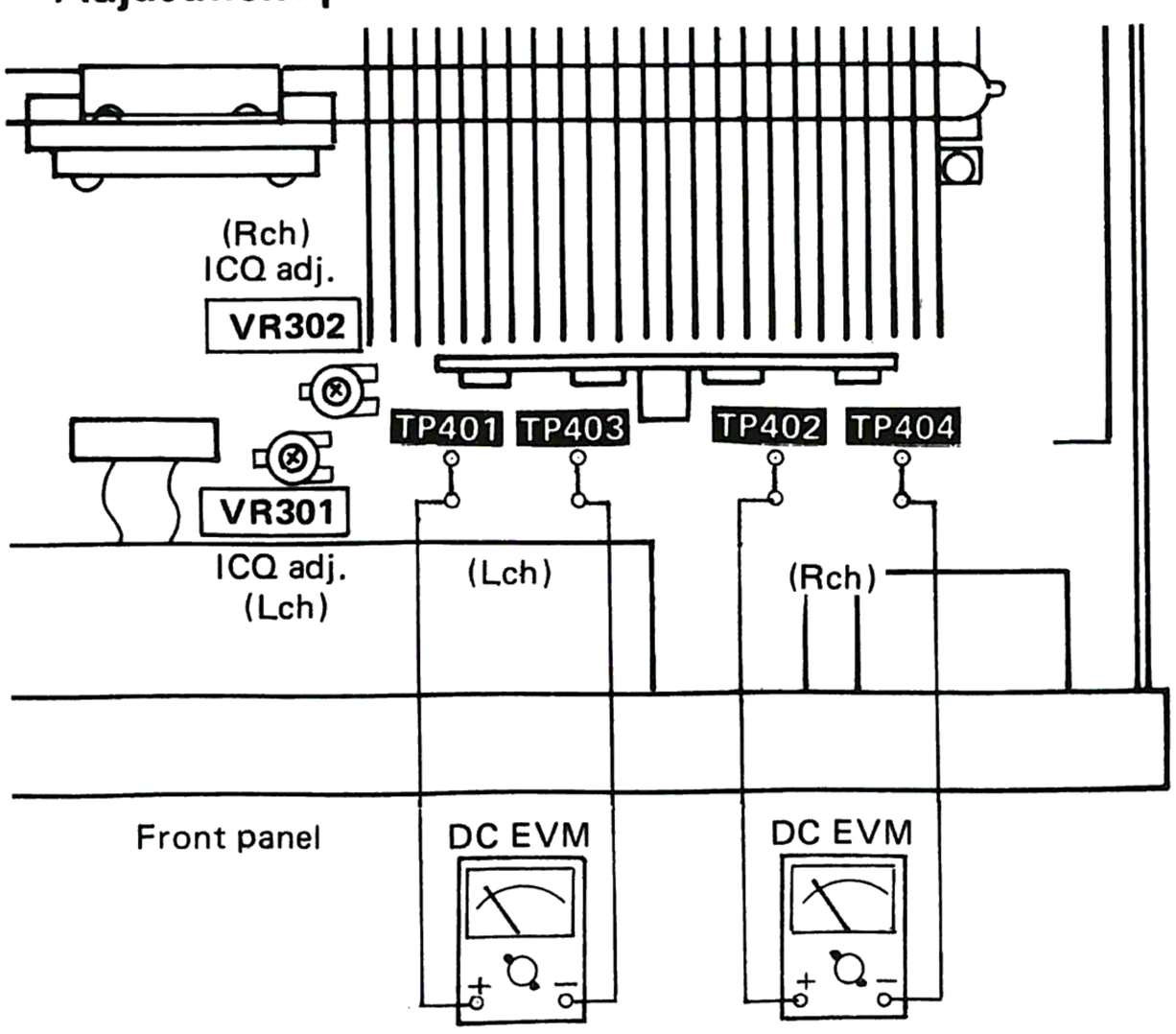

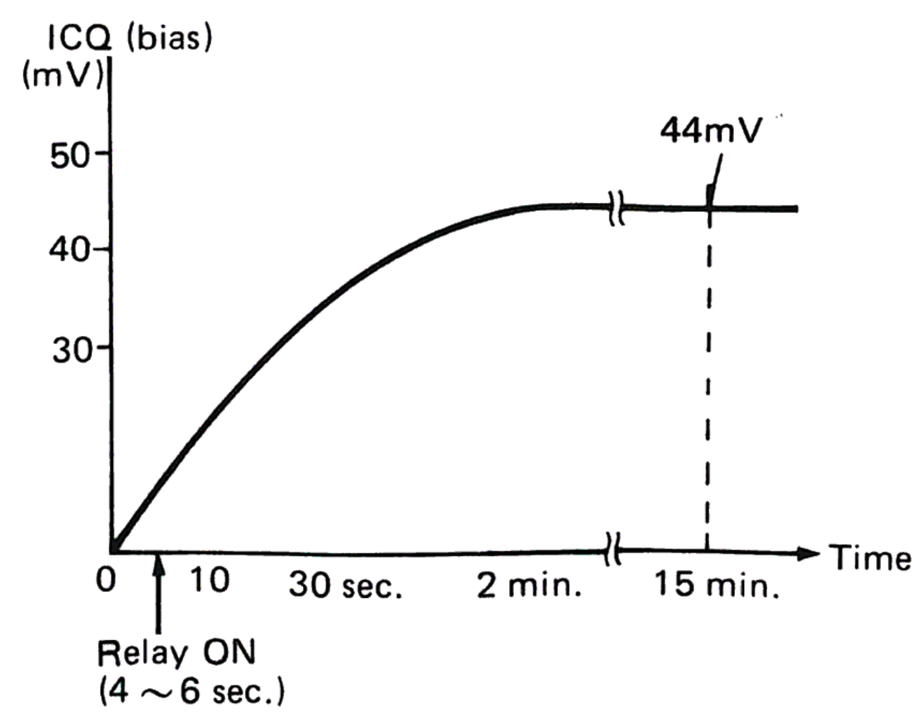

www.hifiengine.com

BLOCK DIAGRAM

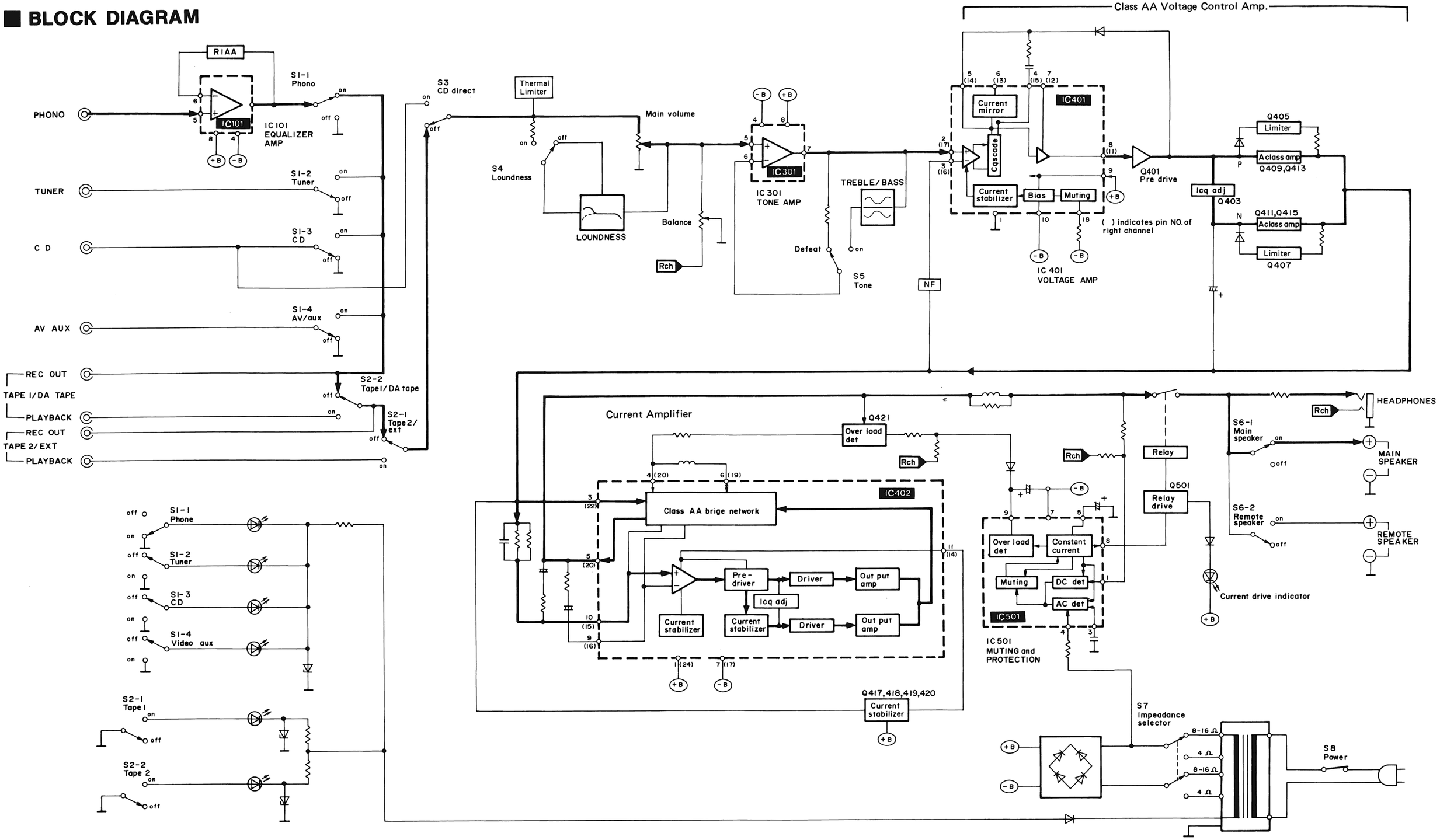

• Terminal guide of IC, transistor and diode

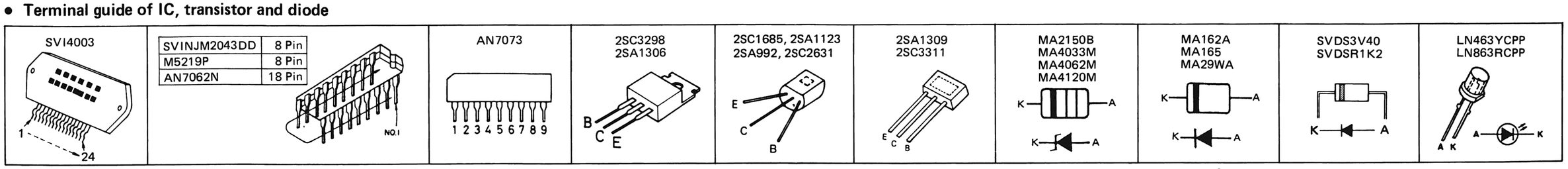

www.hifiengine.com

■ PRINTED CIRCUIT BOARDS AND WIRING CONNECTION DIAGRAM

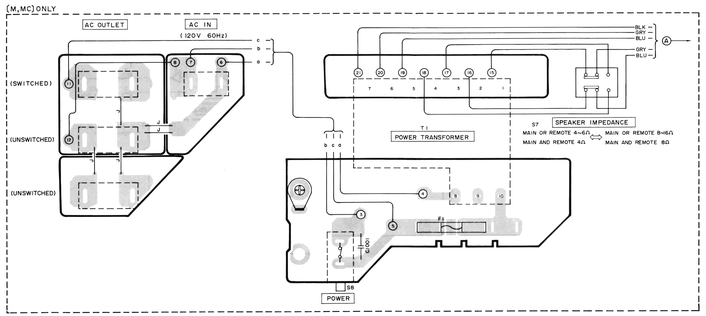

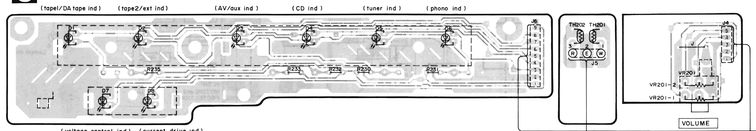

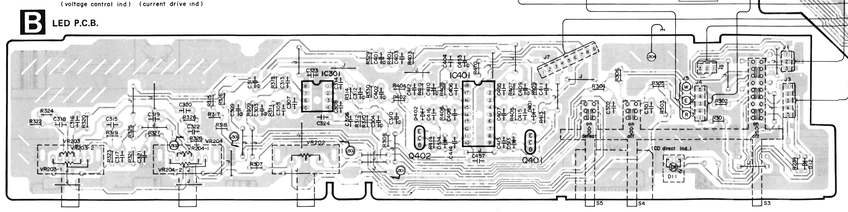

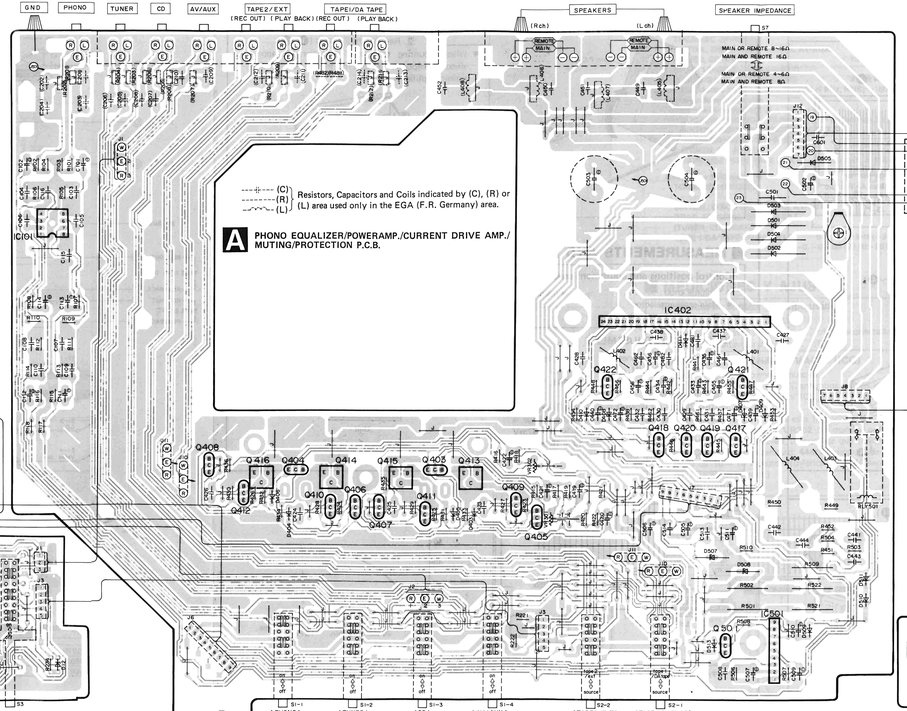

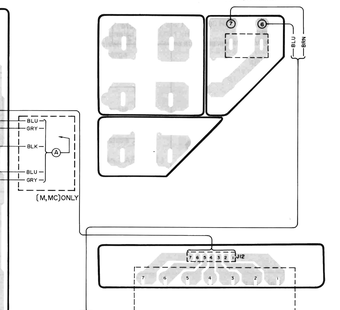

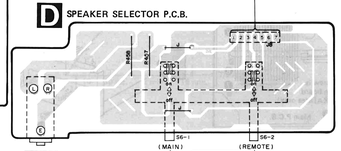

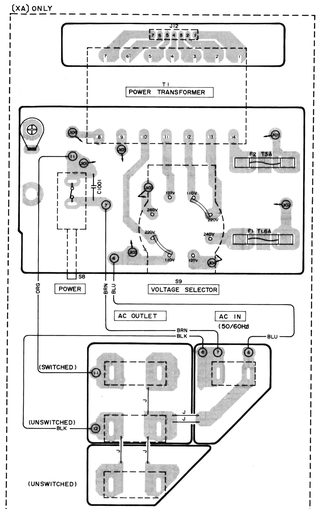

SCHEMATIC DIAGRAM

Note:

1. **S1-1 ~ S1-4:** Input selector switch in "**phono**" position.
   S1-1: phono S1-2: tuner S1-3: CD
   S1-4: AV/aux
2. **S2-1:** Tape 1 monitor switch in "**off**" position.
3. **S2-2:** Tape 2 monitor switch in "**off**" position.
4. **S3:** CD direct switch in "**off**" position.
   (▙ off, ▔ on)
5. **S4:** Lowdness switch in "**off**" position.
   (▙ off, ▔ on)
6. **S5:** Tone control switch in "**defeat**" position.
   (▙ defeat, ▔ on)
7. **S6-1:** Main speaker switch in "**on**" position.
   (▙ off, ▔ on)
8. **S6-2:** Remote speaker switch in "**off**" position.
   (▙ off, ▔ on)
9. **S7:** Impedance selector switch in "**8 ~ 16Ω/16Ω**" position.
   (8 ~ 16Ω/16Ω, ⟷ 4 ~ 6Ω/8Ω)
10. **S8:** Power switch in "**on**" position.
    (▙ off, ▔ on)
11. **S9** (For [XA] area only): Voltage selector switch "**220V**" position.
    (127V ⟷ 110V ⟷ 220V ⟷ 240V)
12. Indicated voltage values are the standard values for the unit measured by the DC electronic circuit tester (high-impedance) with the chassis taken as standard. Therefore, there may exist some errors in the voltage values, depending on the internal impedance of the DC circuit tester.

• Power source circuit

For Other areas [XA]

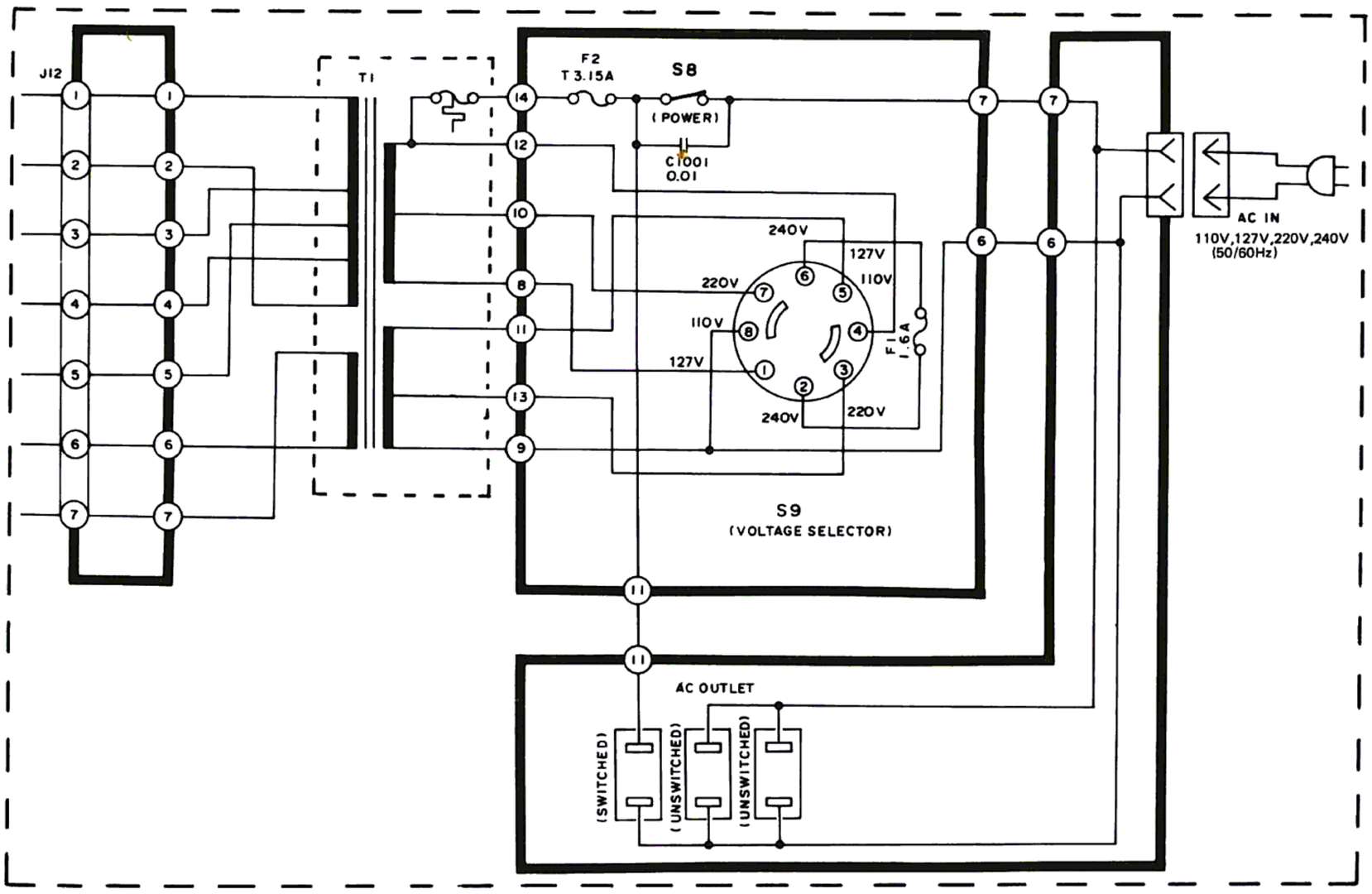

For Continental Europe

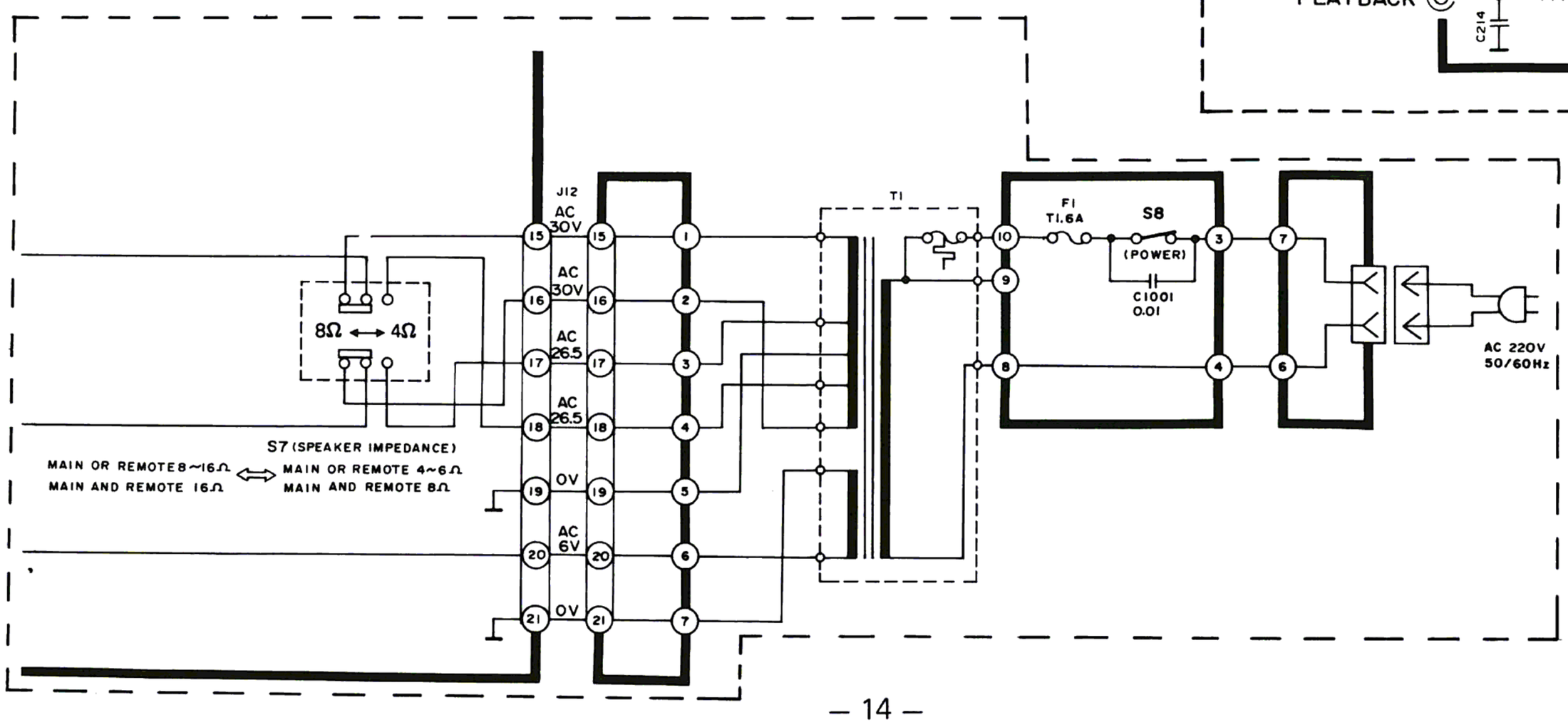

• Phono input
For F.R. Germany [EGA]

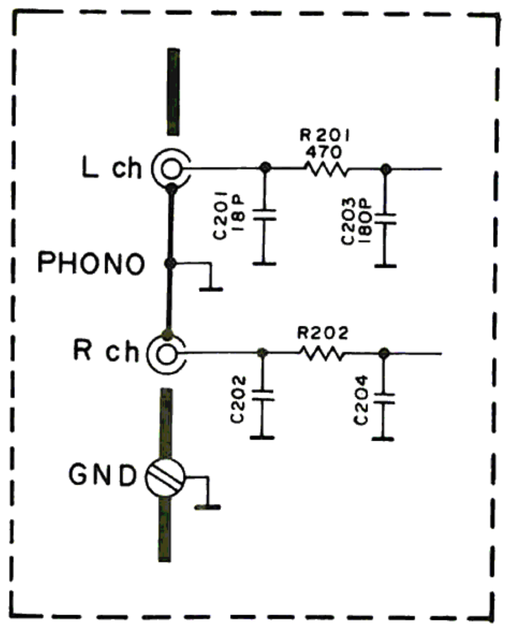

• Program source input/output
For F.R. Germany [EGA]

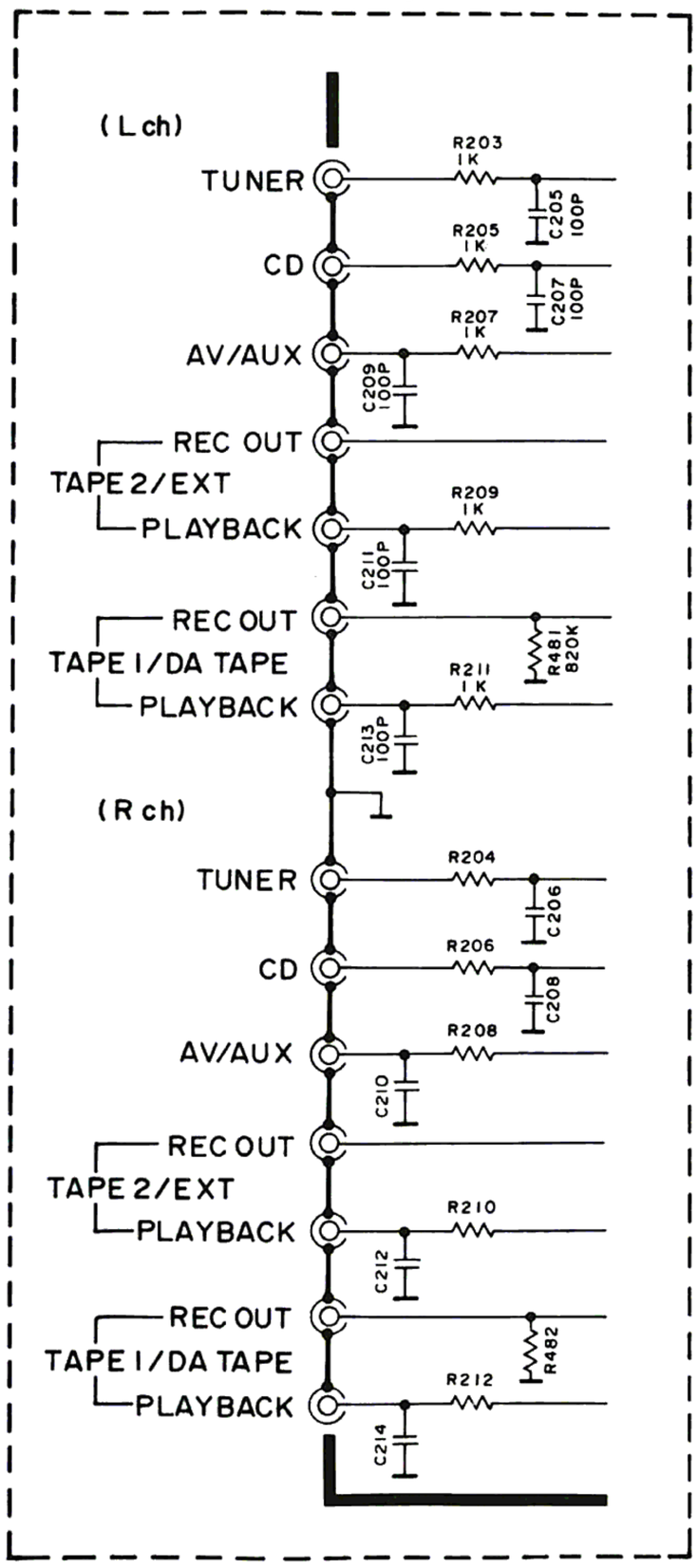

www.hifiengine.com

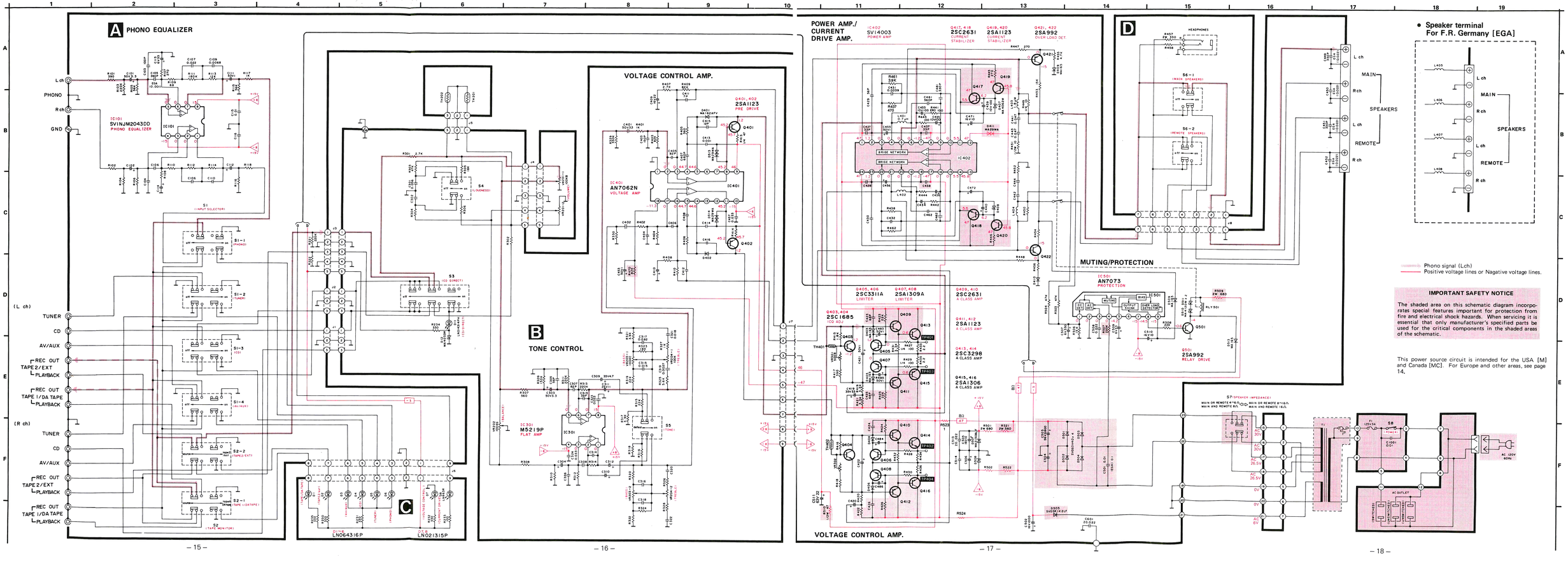
A PHONO EQUALIZER
B TONE CONTROL
C
D
VOLTAGE CONTROL AMP.
POWER AMP./ CURRENT DRIVE AMP.
MUTING/PROTECTION
• Speaker terminal For F.R. Germany [EGA]
Phono signal (Lch)
Positive voltage lines or Nagative voltage lines.
IMPORTANT SAFETY NOTICE
The shaded area on this schematic diagram incorporates special features important for protection from fire and electrical shock hazards. When servicing it is essential that only manufacturer's specified parts be used for the critical components in the shaded areas of the schematic.
This power source circuit is intended for the USA [M] and Canada [MC]. For Europe and other areas, see page 14.

■ REPLACEMENT PARTS LIST

Notes:
1. Part numbers are indicated on most mechanical parts. Please use this part number for parts orders.
2. Important safety nitice: Components identified by ⚠ mark have special characteristics important for safety. When replacing any of these components use only manufacturer's specified parts.
3. Ⓚ — marked parts are used for black only, while ○ — marked parts are for silver type only.
4. Part other than Ⓚ — and ○ — marked are used for both black and silver type.
5. Bracketed indications in Ref. No. columns specify the area. Parts without these indications can be used for all areas.
6. The "Ⓢ" mark is service standard parts and may differ from production parts.
7. The unit of resistance is OHM (Ω). K = 1000Ω, M = 1000KΩ
8. The unit of capacitance is MICROFARAD (μF). P = 10^{-6}μF.
9. The parenthesized numbers in the column of description stand for the quantity per set.

Resistor Type	Wattage	Tolerance
ERD: Carbon ERG: Metal Oxide ERC: Solid	25 : 1/4W 2F : 1/4W S2 : 1/4W S1 : 1/2W 12 : 1/2W	J : ± 5% G : ± 2% K : ±10%

Capacitor Type	Voltage		Tolerance
	ECEA Type	Other	
ECEA....N : Non-polar Electrolytic	2R3 : 2.3V	05 : 50V DC	C : ± 0.25pF
ECEA : Electrolytic	DC	1H : 50V DC	J : ± 5%
ECCD : Ceramic	OJ : 6.3V	1 : 125V DC	K : ±10%
ECKD : Ceramic	1C : 16V	2H : 500V DC	Z : +80%, −20%
ECQM : Polyester	1E : 25V	KC : 400V AC	M : ±20%
ECQV : Polyester	1V : 35V		
ECQP : Polypropylene	1H : 50V		
EECW : Liquid electrolyte double layer capacitor	50 : 50V 25 : 25V		
ECKF : Ceramic	2A : 100V		

● RESISTORS

Ref. No.	Part No.	Value
R101, 102	ERDS2TJ391	390
R103, 104	ERDS2TJ224	220K
R105, 106	ERDS2TJ563	56K
R107, 108	ERDS2TJ271	270
R109, 110	ERDS2TJ680	68
R111, 112	ERDS2TJ184	180K
R113, 114	ERDS2TJ123	12K
R115, 116	ERDS2TJ563	56K
R117, 118	ERDS2TJ102	1K
R201, 202 [EGA] only	ERDS2TJ471	470
R203, 204	ERDS2TJ102	1K
R205, 206	ERDS2TJ102	1K
R207, 208	ERDS2TJ102	1K
R209, 210	ERDS2TJ102	1K
R211, 212	ERDS2TJ102	1K
R221, 222	ERDS2TJ224	220K
R230, 231	ERDS2TJ331	330
R232	ERDS2TJ331	330
R233	ERDS2TJ101	100
R234, 235	ERDS2TJ331	330

Ref. No.	Part No.	Value
R301, 302	ERDS2TJ272	2.7K
R303, 304	ERDS2TJ473	47K
R305, 306	ERDS2TJ183	18K
R307, 308	ERDS2TJ561	560
R309, 310	ERDS2TJ154	150K
R311, 312	ERDS2TJ224	220K
R313, 314	ERDS2TJ224	220K
R315, 316	ERDS2TJ223	22K
R317, 318	ERDS2TJ392	3.9K
R319, 320	ERDS2TJ223	22K
R321, 322	ERDS2TJ392	3.9K
R323, 324	ERDS2TJ183	18K
R325, 326	ERDS2TJ562	5.6K
R327, 328	ERDS2TJ102	1K
R329, 330	ERDS2TJ334	330K
R401, 402	ERDS2TJ102	1K
R403, 404	ERDS2TJ823	82K
R405, 406	ERDS2TJ561	560
R407, 408	ERDS2TJ272	2.7K
R409, 410	ERDS2TJ823	82K

Ref. No.	Part No.	Value
R413, 414 Ⓢ	ERD25FJ470	47
R415, 416	ERDS2TJ182	1.8K
R417, 418	ERDS2TJ391	390
R419, 420	ERDS2TJ332	3.3K
R421, 422 ⚠	ERDS2TJ332	3.3K
R423, 424 ⚠	ERDS2TJ223	22K
R425, 426 ⚠	ERDS2TJ223	22K
R427, 428 Ⓢ	ERD25FJ101	100
R429, 430 Ⓢ	ERD25FJ101	100
R431, 432	ERDS2TJ332	3.3K
R433, 434	ERDS2TJ2R2	2.2
R435, 436	ERDS2TJ2R2	2.2
R437, 438	ER0S2TKF4700	470
R441, 442	ER0S2TKF1000	100
R443, 444	ER0S2TKF1000	100
R445, 446 ⚠	ERDS2TJ271	270
R447, 448	ERDS2TJ271	270
R449, 450 Ⓢ	ERD25FJ100	10

Ref. No.	Part No.	Value
R451, 452 Ⓢ	ERD25FJ100	10
R453, 454	ERDS2TJ153	15K
R455, 456	ERDS2TJ472	4.7K
R457, 458	ERG2SJ331	330
R461, 462	ERDS2TJ392	3.9K
R470 ⚠	ERDS2TJ823	82K
R481, 482	ERDS2TJ824	820K
R501, 502	ERG2SJ681	680
R503, 504	ERDS2TJ473	47K
R506	ERDS2TJ153	15K
R507 ⚠	ERDS2TJ224	220K
R508	ERDS2TJ223	22K
R509 ⚠	ERG2SJ681	680
R510 ⚠	ERDS1FJ470	47
R521, 522 ⚠	ERG2SJ561	560
R523, 524 ⚠Ⓢ	ERD25FJ1R0	1

● CAPACITORS

Ref. No.	Part No.	Value
C101, 102	ECEA1HU3R3	3.3
C103, 104 Ⓢ	ECCD1H101K	100P
C105, 106 [EGA] Ⓢ	ECKD1H102KB	0.001
C105, 106 [other] Ⓢ	ECKD1H391KB	390P
C107, 108 Ⓢ	ECQM1H223JZ	0.022
C109, 110 Ⓢ	ECQM1H682JZ	0.0068
C111, 112	ECEA1HU010	1
C113, 114	ECEA0JU330	33
C115, 116 Ⓢ	ECKD1H103ZF	0.01
C201, 202 [EGA] only Ⓢ	ECCD1H180K	18P
C203, 204 [EGA] only Ⓢ	ECCD1H181K	180P
C205, 206 [EGA] only Ⓢ	ECCD1H101K	100P
C207, 208 [EGA] only Ⓢ	ECCD1H101K	100P
C209, 210 [EGA] only Ⓢ	ECCD1H101K	100P
C211, 212 [EGA] only Ⓢ	ECCD1H101K	100P

Ref. No.	Part No.	Value
C213, 214 [EGA] only Ⓢ	ECCD1H101K	100P
C301, 302 Ⓢ	ECQM1H563JZ	0.056
C303, 304	ECEA1HU3R3	3.3
C305, 306 Ⓢ	ECCD1H560K	56P
C307, 308 Ⓢ	ECCD1H820K	82P
C309, 310	ECEA1VU4R7	4.7
C311, 312	ECEA1EU100	10
C313, 314 Ⓢ	ECCD1H390K	39P
C315, 316 Ⓢ	ECQM1H153JZ	0.015
C317, 318 Ⓢ	ECQM1H823JZ	0.082
C319, 320 Ⓢ	ECQM1H272JZ	0.0027
C321, 322 Ⓢ	ECQM1H183JZ	0.018
C323, 324 Ⓢ	ECKD1H333ZF	0.033
C401, 402	ECEA1HU3R3	3.3
C403, 404 Ⓢ	ECCD1H151K	150P
C405, 406 Ⓢ	ECCD1H820K	82P
C407, 408 Ⓢ	ECKD1H681KB	680P
C409, 410	ECEA1CU220	22
C411, 412 Ⓢ	ECCD1H070CC	7P
C413, 414 Ⓢ	ECKD1H102KB	0.001
C415, 416 Ⓢ	ECCD1H120K	12P
C419, 420	ECEA1VU330	33
C421, 422	ECEA1HU010	1
C423, 424 ⚠Ⓢ	ECCD1H680K	68P

Ref. No.	Part No.	Value
C425, 426 ⚠Ⓢ	ECCD1H680K	68P
C427, 428 ⚠Ⓢ	ECCD1H330K	33P
C429, 430 Ⓢ	ECCD1H560K	56P
C431, 432 Ⓢ	ECQM1H392JZ	0.0039
C433, 434	ECEA1AU101	100
C435, 436	ECEA1AU101	100
C437, 438 ⚠Ⓢ	ECCD1H330K	33P
C439, 440	ECEA1AU101	100
C441, 442 Ⓢ	ECQM1H473JZ	0.047
C443, 444 Ⓢ	ECQM1H473JZ	0.047
C449, 450 [EGA] Ⓢ	ECKD1H223ZF	0.022
C449, 450 [other] Ⓢ	ECKD1H331KB	330P
C451, 452 [EGA] Ⓢ	ECKD1H223ZF	0.022
C451, 452 [other] Ⓢ	ECKD1H331KB	330P
C453	ECEA1HU010	1
C455, 456	ECEA1HU010	1
C457 Ⓢ	ECKD1H333ZF	0.033
C461, 462 Ⓢ	ECKD1H561KB	560P
C471, 472	ECEA1CU100	10

Ref. No.	Part No.	Value
C481, 482 Ⓢ	ECKD1H331KB	330P
C483, 484	ECEA1HU010	1
C485, 486	ECEA1HU010	1
C501 [EGA] ⚠	ECQE2104MS	0.1
C501 [other] ⚠	ECKD2H103PF	0.01
C502	ECEA1CU102	1000
C503, 504 ⚠	ECETS56V682V	6800
C505, 506	ECEA1CU100	10
C507	ECEA0JU331	330
C508	ECFTD223KXL	0.022
C509	ECEA0JU330	33
C510	ECEA1CU100	10
C511	ECEA1JU010	1
C513, 514	ECKD1H223ZF	0.022
C601	ECKD1H223ZF	0.022
C1001 [EK] only ⚠	ECKDKC103PF2	0.01
C1001 [other] ⚠	ECKWNS103ZV	0.01

www.hifiengine.com

Ref. No.	Part No.	Description
INTEGRATED CIRCUITS		
IC101	SVINJM2043DD	Integrated Circuit
IC301	M5219P	Integrated Circuit
IC401	AN7062N	Integrated Circuit
IC402 ⚠	SVI4003	Integrated Circuit
IC501	AN7073	Integrated Circuit
TRANSISTORS		
Q401, 402, 411, 412, 419, 420	2SA1123R	Transistor
Q403, 404	2SC1685−QNC	Transistor
Q405, 406	2SC3311−Q	Transistor
Q407, 408	2SA1309Q	Transistor
Q409, 410, 417, 418 ⚠	2SC2631R	Transistor
Q413, 414 ⚠	2SC3298A−Y	Transistor
Q415, 416 ⚠	2SA1306AY	Transistor
Q421, 422, 501	2SA992E	Transistor
DIODES		
D1~6, 7	LN463YCPP	L.E.D.
D8, 11	LN863RCPP	L.E.D.
D12	MA4033M	Diode
D401, 402	MA162A	Diode
D403~406, 409, 410, 509, 513	MA165	Diode
D407, 408	MA4062−M	Diode
D411, 513, 514 ⚠	MA29WA	Diode
D501~504 ⚠	SVDS3V40	Rectifier
D505 ⚠	SVDSR1K2	Rectifier
D507, 508	MA2150B	Diode
D510, 511	MA4120−M	Diode
COILS		
L401, 402	SLQY07G−40	Choke
L403, 404	SLQY18G−10	Choke
L405~408 [EGA] only	SLQY07G−40	Choke
TRANSFORMERS		
T1 [M, MC] ⚠	SLT5U56−W	Power Transformer
T1 [EK, XL] ⚠	SLT5U58−W	Power Transformer
T1 [XA] ⚠	SLT5U59−W	Power Transformer
T1 [other] ⚠	SLT5U57−W	Power Transformer
VARIABLE RESISTORS		
VR201	EWJKXA090B15	Volume, 100kΩ(B)
VR202	EWHUAA08G15	Balance, 100kΩ(G)
VR203, 204	EWCSEA020C15	Tone, 100kΩ(C)
VR301, 302	EVNK6AA00B52	I_{CQ} Adj., 500Ω(B)
THERMISTORS		
TH201, 202, 401, 402	ERTD2ZHL104S	100kΩ
RELAY		
RY501	SSY129	
FUSES		
F1 [M, MC] ⚠	XBA1F30NU14	125V, 3A
F1 [EK] ⚠	XBA2C16TB0	250V, T1.6A
F1 [other] ⚠	XBA2C16TR0	250V, T1.6A
F2 [XA] only ⚠	XBA2C31TR0	250V, T3.1A
SWITCHES		
S1	SSH4102	Input Selector
S2	SSH2111	Tape Monitor
S3~5	SSH3703	CD Direct, Loudness, Tone
S6	SSH2112	Speaker
S7 [M, MC] ⚠	ESD3911T	Impedance Selector
S7 [other] ⚠	SSH1149	Impedance Selector

Ref. No.	Part No.	Description
S8 ⚠	ESB8215V	Power Switch
S9 [XA] only ⚠	ESE37263	Voltage Selector

Ref. No.	Part No.	Description	
CABINET and CHASSIS PARTS			
1 ○	SBN1208−1	Knob, Volume (Silver Type)	(1)
1 Ⓚ	SBN1208	Knob, Volume (Black Type)	(1)
2 ○	SBN1207−1	Knob, Control (Silver Type)	(3)
2 Ⓚ	SBN1206	Knob, Control (Black Type)	(3)
3 ○	SGWUV40−SE	Front Panel Ass'y (Silver Type)	(1)
3 Ⓚ	SGWUV40−KE	Front Panel Ass'y (Black Type)	(1)
3-1 ○	SBC796−1	Button (Silver Type)	(1)
3-1 Ⓚ	SBC796	Button (Black Type)	(1)
4 ○	SBC719	Button (Silver Type)	(2)
4 Ⓚ	SBC719−1	Button (Black Type)	(2)
5 ○	SBC820−1	Button (Silver Type)	(1)
5 Ⓚ	SBC820	Button (Black Type)	(1)
6	SMC6407	Shield Plate	(1)
7	LN021315P	L.E.D. (D7, 8)	(1)
8	LN064316P	L.E.D. (D1~6)	(1)
9	LN014314PH	L.E.D. (D11)	(1)
10 ○	SBC666	Button, Power (Silver Type)	(1)
10 Ⓚ	SBC666−3	Button, Power (Black Type)	(1)
11	SJJ126B	Headphone Jack	(1)
12 ○	SBC439	Button, Speaker (Silver Type)	(2)
12 Ⓚ	SBC439−2	Button, Speaker (Black Type)	(2)
13	SUB254	Connection Rod	(6)
14	SUB253	Connection Rod	(1)
15 [EK] ○	SKCUV40−SE	Cabinet (Silver Type)	(1)
15 [other] ○	SKC1910S981	Cabinet (Silver Type)	(1)
15 [EK] Ⓚ	SKCUV40−SE	Cabinet (Black Type)	(1)
15 [other] Ⓚ	SKC1910K991	Cabinet (Black Type)	(1)
16	SKL299−1	Foot (Left)	(2)
17	SKL299	Foot (Right)	(2)
18 [M, MC]	SJT389	Fuse Holder	(2)
18 [XA]	SJT347	Fuse Holder	(4)
18 [other]	SJT388	Fuse Holder	(2)
19 [XA]	SJS5711−1	Connector (7P)	(1)
19 [other]	SJS305	Connector (3P)	(1)
20 [XA] only	SMX911	Insulation Cover	(1)
21	SHR401−1	Lock Pin	(3)
22	SUS227	Bracket	(4)
23	SHE815	P.C.B. Holder	(6)
24 [M, MC]	SKUUV40−KM	Bottom Board	(1)
24 [XA]	SKUUV40−KX	Bottom Board	(1)
24 [other]	SKU11280−6	Bottom Board	(1)
25	SMX909	Instruction Cover	(1)
26 Except [M, MC]	SBC165	Button, Impedance	(1)
27 ⚠ [M, MC] only	SJS9329B	AC Outlet	(1)
27 ⚠ [XA] only	SJS9328B	AC Outlet	(1)
28 ⚠ M, MC, XL	SJS9234B	AC Inlet	(1)
28 ⚠ [other]	SJS9231B	AC Inlet	(1)
29	SJF4818−1	Terminal Board	(1)
30	SJF3057−5N	Terminal Board	(1)
31	SJF3062NK	Terminal Board	(1)
32 [M, MC]	SGP6780−1A	Rear Panel	(1)
32 [E]	SGP6780A	Rear Panel	(1)
32 [EGA]	SGP6780B	Rear Panel	(1)
32 [EK]	SGP6780C	Rear Panel	(1)
32 [XL]	SGP6780D	Rear Panel	(1)
32 [XA]	SGP6780−2A	Rear Panel	(1)
32 [other]	SGPUV40−KE	Rear Panel	(1)
33 [M, MC] only	SJS9329A	AC Outlet Cover	(1)
33 [XA] only	SJS9328A	AC Outlet Cover	(1)
34 M, MC, XL	SJS9234A	AC Inlet Cover	(1)
34 [other]	SJS9231A	AC Inlet Cover	(1)
35	SHR301	Lead Clamper	(4)
38	SJT3709	Post (7P), (J8)	(1)
39	SJT3321	Post (3P), (J1, J2)	(2)
39	SJT3513	Post (5P), (J3)	(1)
40	SJS5715	Socket (7P), (J8)	(1)
40	SJS5331	Socket (3P), (J1, J2)	(2)
40	SJS5531	Socket (5P), (J3)	(1)
41	SJT783	Terminal	(13)
42	SJT30943−V	Post (J6, J7)	(2)
SCREWS, NUTS and WASHERS			
N1	XTBS3+10JFZ1	Tapping with Detent, ⊕3×10	(4)
N2	SNE4021	Nut	(4)
N3	XTB3+10GFYR	Tapping, ⊕3×10	(6)
N4 ○	SNE2095−4	Cabinet (Silver Type)	(4)
N4 Ⓚ	SNE2095−5	Cabinet (Black Type)	(4)
N5 ○	XTB3+8JFN	Tapping, ⊕3×8 (Silver Type)	(2)
N5 Ⓚ	XTB3+8JFZ	Tapping, ⊕3×8 (Black Type)	(2)
N6	XTW3+10T	Tapping with Washer, ⊕3×10	(6)
N7	XTW3+8TFR	Tapping with Washer, ⊕3×8	(2)
N8 [XA] only	XYN3+F8	Screw with Washer, ⊕3×8	(1)
N9	XTB3+16J	Tapping, ⊕3×16	(2)
N10	XYN3+F14	Screw with Washer, ⊕3×14	(2)
N11	XTW3+8T	Tapping with Washer, ⊕3×8	(4)
N12	XTB3+8FFZ	Tapping, ⊕3×8	(8)
N13	XTBS3+16F1	Tapping, ⊕3×16	(4)
N14	XTBS3+8JFZ1	Tapping with Detent, ⊕3×8	(5)
N15 [M, MC] only	XYN3+C6FZ	Screw with Washer, ⊕3×6	(2)
ACCESSORIES			
A1 [M, MC] ⚠	SJA172	AC Cord	(1)
A1 [XL] ⚠	SJA173	AC Cord	(1)
A1 [XA] ⚠	SJA168−1	AC Cord	(1)
A1 [EK] ⚠	SFDAC05G02	AC Cord	(1)
A1 [other] ⚠	SFDAC05E02	AC Cord	(1)
A2 ⚠ [XA] only	SJP9215	Plug Adaptor	(1)
A3 [M]	SQFK10128	Instruction Book	(1)
A3 [MC]	SQFK10129	Instruction Book	(1)
A3 [EGA]	SQFK10132	Instruction Book	(1)
A3 [XA]	SQFK10130	Instruction Book	(1)
A3 [other]	SQFK10131	Instruction Book	(1)
PACKING PARTS			
P1 [M] Ⓚ	SPGK244	Carton Box (Black Type)	(1)
P1 [MC] Ⓚ	SPGK245	Carton Box (Black Type)	(1)
P1 [EF]	SPGK248	Carton Box	(1)
P1 [XL]	SPGK249	Carton Box	(1)
P1 [EK] ○	SPGK251	Carton Box (Silver Type)	(1)
P1 [EK] Ⓚ	SPGK247	Carton Box (Black Type)	(1)
P1 [other] ○	SPGK250	Carton Box (Silver Type)	(1)
P1 [other] Ⓚ	SPGK246	Carton Box (Black Type)	(1)

www.hifiengine.com

■ EXPLODED VIEWS

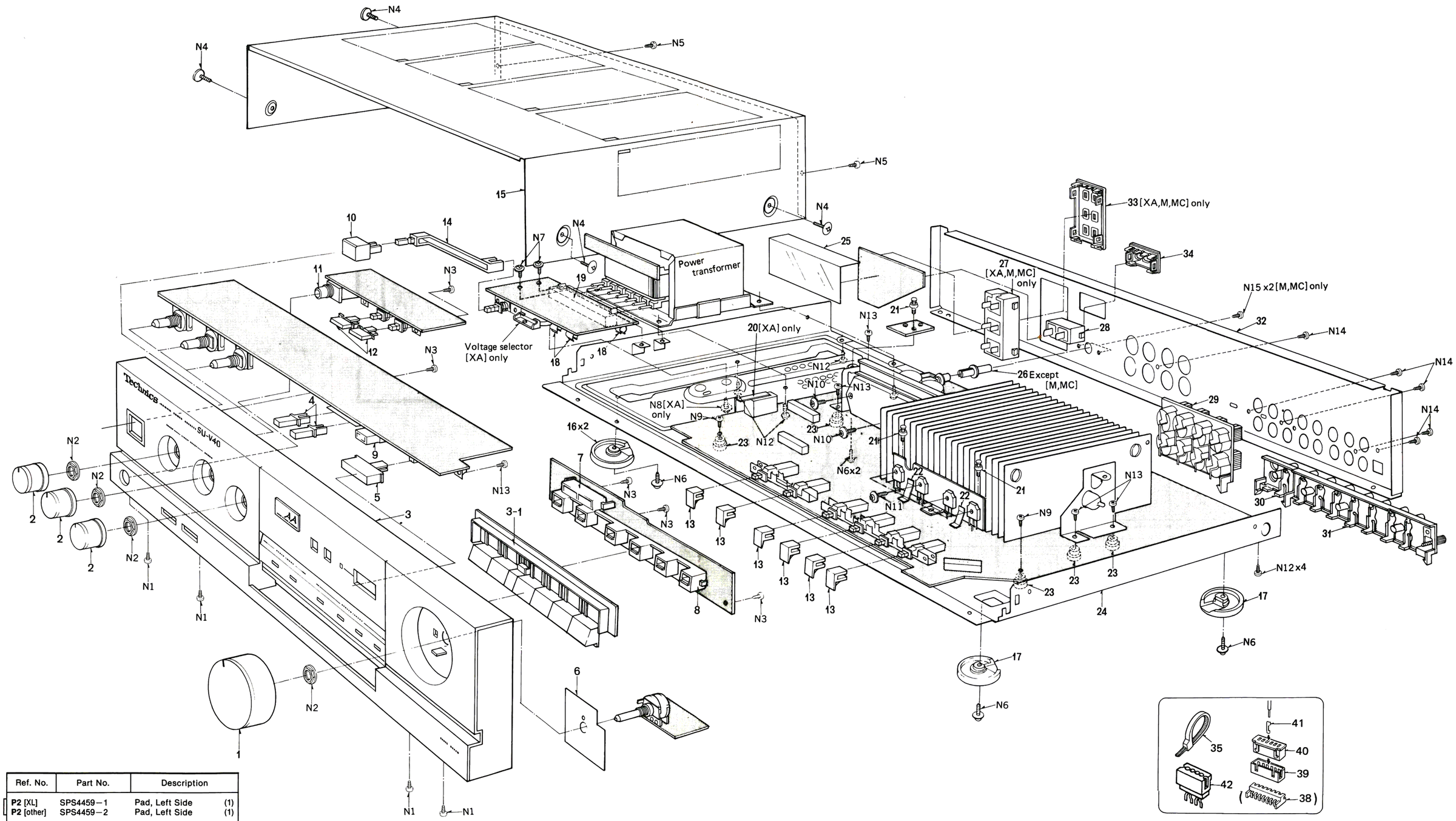

Ref. No.	Part No.	Description	
P2 [XL]	SPS4459−1	Pad, Left Side	(1)
P2 [other]	SPS4459−2	Pad, Left Side	(1)
P3 [XL]	SPS4460−1	Pad, Right Side	(1)
P3 [other]	SPS4460−2	Pad, Right Side	(1)
P4	SPS4613−1	Pad, Upper	(1)
P5 ○	SPP699	Polyethylene Bag	(1)
P5 Ⓚ	SPP649	Polyethylene Bag	(1)
P6 ○ [EF, XL] only	SGK1411	Label (Silver Type only)	(2)

Printed in Japan
860212000 Ⓚ YY/TN

www.hifiengine.com