ORDER NO.AD8805087C8

Service Manual

Amplifier

Stereo Integrated Amplifier

SU-V550

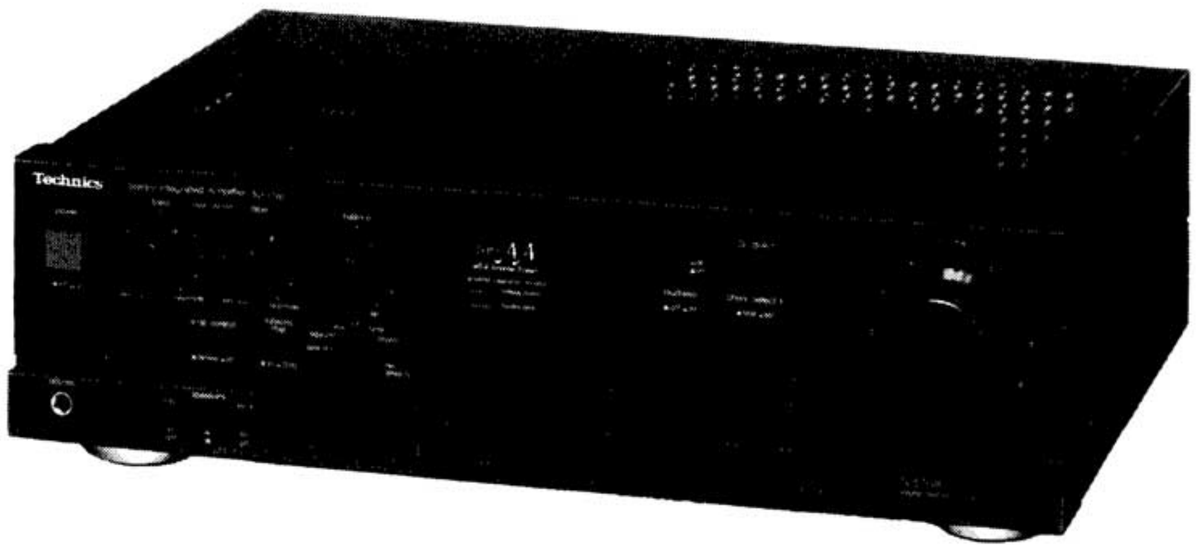

Color

(S) .....Silver Type
(K) .....Black Type

Area

Color	Area
(S)(K)	(E) .....Continental Europe.
(S)(K)	(Ei) .....Italy.
(S)(K)	(EG).....F.R.Germany.
(S)(K)	(EB).....Belgium.
(S)(K)	(EK).....United Kingdom.
(S)(K)	(EF) .....France.
(S)(K)	(EH).....Holland.
(S)(K)	(XL) .....Australia.
(S)(K)	(XA).....Asia,Latin America,Middle Near East,Africa and Oceania.

SPECIFICATIONS

(DIN 45 500)

■ AMPLIFIER SECTION

20 Hz ~ 20 kHz continuous power output	
both channels driven	2 x 65 W (8Ω)
1 kH continuous power output	
both channels driven	2 x 105 W (4Ω)
	2 x 75 W (8Ω)
Total harmonic distortion	
rated power at 20 Hz ~ 20 kHz	0.002% (8Ω)
rated power at 1 kHz	0.005% (4Ω)
	0.0009% (8Ω)
half power at 20 Hz ~ 20 kHz	0.002% (8Ω)
half power at 1 kHz	0.002% (4Ω)
	0.0008% (8Ω)
Intermodulation distortion	
rated power at 50 Hz:7 kHz = 4:1,SMPTE,8Ω	0.005%
Power bandwidth	
both channels driven,-3dB	5 Hz ~ 50 kHz (8Ω,0.03%)
Residual hum and noise	0.8 mV
Damping factor	30 (4Ω),60 (8Ω)
Input sensitivity and impedance	
PHONO MM	2.5mV/47 kΩ
MC	170 μV/220 Ω
TUNER,CD,AUX,TAPE 1/DAT	
TAPE 2/EXT	150mV/22 kΩ
PHONO maximum input voltage (IHF'66 1 kHz,RMS)	
MM	160 mV
MC	12 mV
S/N	
rated power(4Ω)	
PHONO MM	77 dB (83 dB:IHF'66)
PHONO MC	64 dB (65 dB:IHF'66)
TUNER,CD,AUX, TAPE 1/DAT, TAPE 2/EXT	91 dB (100 dB:IHF'66)
-26 dB power (4Ω)	
PHONO MM	68 dB
MC	62 dB
TUNER,CD,AUX, TAPE 1/DAT, TAPE 2/EXT	70 dB
50 mW power (4Ω)	
PHONO MM	62 dB
MC	61 dB
TUNER,CD,AUX, TAPE 1/DAT, TAPE 2/EXT	62 dB
Frequency responce	
PHONO	RIAA standard curve ± 0.8dB(30 Hz ~ 15 kHz)
TUNER,CD,AUX, TAPE 1/DAT, TAPE 2/EXT	3 Hz ~ 100 kHz (-3 dB) +0, -0.2 dB (20 Hz ~ 20 kHz)
Tone controls	
BASS	50 Hz, +10 dB ~ -10 dB
TREBLE	20 kHz, +10 dB ~ -10 dB
Subsonic filter	20 Hz,-6 dB/oct.
Loudness control (volume at -30 dB)	50 Hz, +9 dB
Output voltage	
TAPE 1/DAT, TAPE 2/EXT REC OUT	150 mV
Channel balance, AUX 250 Hz ~ 6,300 Hz	±1 dB
Channel separation, AUX 1 kHz	50dB
Headphones output level and impedance	540 mV/330 Ω
Load impedance	
MAIN or REMOTE	4 Ω ~ 16 Ω
MAIN and REMOTE	8 Ω ~ 16 Ω

■ GENERAL

Power consumption	520 W
Power supply	
For United Kingdom and Australia	AC 50 Hz/60 Hz, 240 V
For continental Europe	AC 50 Hz/60 Hz,220 V
For others	AC 50 Hz/60 Hz, 110 V/127 V/220 V/240 V
Dimensions (W x H x D)	430 x 126 x 311 mm (16-15/16" x 4-15/16" x 12-7/32")
Weight	7.9 kg (17.4 lb.)

Notes:

1.Specifications are subject to change without notice. Weight and dimensions are approximate.

2.Total harmonic distortion is measured by the digital spectrum analyzer (H.P. 3045 system).

Technics

Matsushita Electric Industrial Co., Ltd.
Central P.O. Box 288, Osaka 530-91, Japan

■ CONTENTS

	Page
BEFORE REPAIR AND ADJUSTMENT	2
PROTECTION CIRCUITRY	2
ACCESSORY	2
LOCATION OF CONTROLS	3, 4
CONNECTIONS	5, 6
DISASSEMBLY INSTRUCTIONS	7, 8
CIRCUIT BOARDS AND WIRING CONNECTION DIAGRAM	9~11
TERMINAL GUIDE OF IC'S, TRANSISTORS AND DIODES	12
SCHEMATIC DIAGRAM	13~16
BLOCK DIAGRAM	17, 18
MEASUREMENTS AND ADJUSTMENTS	19
REPLACEMENT PARTS LIST	19, 20, 23
EXPLODED VIEW	21, 22
RESISTORS AND CAPACITORS	24, 25

■ BEFORE REPAIR AND ADJUSTMENT

(1) Turn off the power supply. Using a 10Ω, 10W resistor, shortcircuit both ends of power supply capacitors (C705,C706)in order to discharge the voltage.

(2) Before turning on the power switch of the unit.

A. Connect the voltage controller to the primary side.

B. Connect the AC ampere meter to the primary side or connect the DC voltage meter to the "±B" circuit of the secondary side.

C. Turn the VR of ICQ(VR401 and VR402)to minimum(counterclockwise).

D. After setting the output to zero of the voltage contoller,turn on the power switch of the unit.
And increase the output of voltage controller gradually.
Then, check carefully whether the current value of primary side become more than following value or whether the DC voltage of secondary side is increasing slowly.

E. If the value of current is increasing unusually or the DC voltage is not increasing,lower the output level of voltage contoller immediately.

● The current value of the primary side at no signal. (Confirm the power supply voltage of each area and provided voltage of the unit.)

Power supply voltage	AC110V	AC127V	AC220V	AC240V
Consumed current 50/60Hz	280 ~ 560mA	260 ~ 520mA	140 ~ 280mA	130 ~ 260mA

■ PROTECTION CIRCUITRY

The protection circuitry of the amplifier may have operated if either of the following conditions is noticed:

● No sound is heard when the power is turned on.

● Sound stops during a performance.

The function of this circuitry is to prevent circuitry damage if, for example, the positive and negative speaker connection wires are "shorted" , or if speaker systems with an impedance less than the indicated rated impedance of the amplifier are used.

If this occurs, follow the procedure outlined below:

1.Turn off the power.

2.Determine the cause of the problem and correct it.

3.Turn on the power once again.

Note:

When the protection circuitry functions, theunit will not operate unless the power is first turned off and then on again.

■ ACCESSORY

●AC power supply cord 1

(SJA168) ..... For (XA) area only.

(SJA173) ..... For (XL) area only.

(SJA193) ..... For (EK) area only.

(SFDAC05E03) ..... For others.

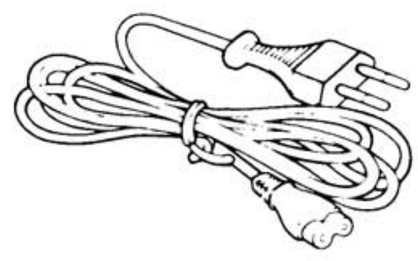

■ LOCATION OF CONTROLS

•Safety operation indicator (amplifier operation monitor)
This indicator illuminates to indicate the operating condition of this unit.
voltage control:
When the power is switched ON, this indicator illuminates when the unit is in the operation condition.
current drive:
When the power is switched ON, this indicator illuminates after about 4 seconds when the unit is in the operation condition.
If an abnormal condition in the circuitry is detected, such as DC voltage appearing in the output, or a short-circuit of the positive (+) and negative (−) wires from the speaker terminals, the protection circuit functions and this indicator does not illuminate. If this occurs, switch the power OFF, find the cause of the trouble and correct it, and then switch the power ON once again.

•Balance control (balance)
This control is used to adjust left/right volume balance.

•Subsonic filter switch (subsonic filter)
off (▂→ ▮): Set to this position for ordinary use.
20 Hz (▮→ ▂): Set to this position to eliminate ultra-low-frequency noise such as motor "rumble" and unusual vibration of the woofer cone caused by a warped disc, etc.

•Tone controls (bass/treble)
The bass control is for the low-frequency sound range, and the treble control is for the high-frequency sound range.

•Power switch (power)

•Tone switch (tone control)
This switch is used to switch the tone control circuit (bass, treble) ON or OFF.
defeat (▂ ▂ ▮):
Set to this position to turn the bass/treble tone control circuit off. Regardless of the positions of the bass/treble tone controls, the characteristics will remain flat.
on (▮ ▂ ▂):
Set to this position to adjust the tone quality by using the tone controls.

•Headphones jack (phones)

•Speaker selectors (speakers)
These selectors are used to switch the speaker systems ON and OFF.
main on (▮ ▂ ▂):
Sound can be heard from the speakers connected to the "MAIN" terminals.
remote on (▮ ▂ ▂):
Sound can be heard from the speakers connected to the "REMOTE" terminals.

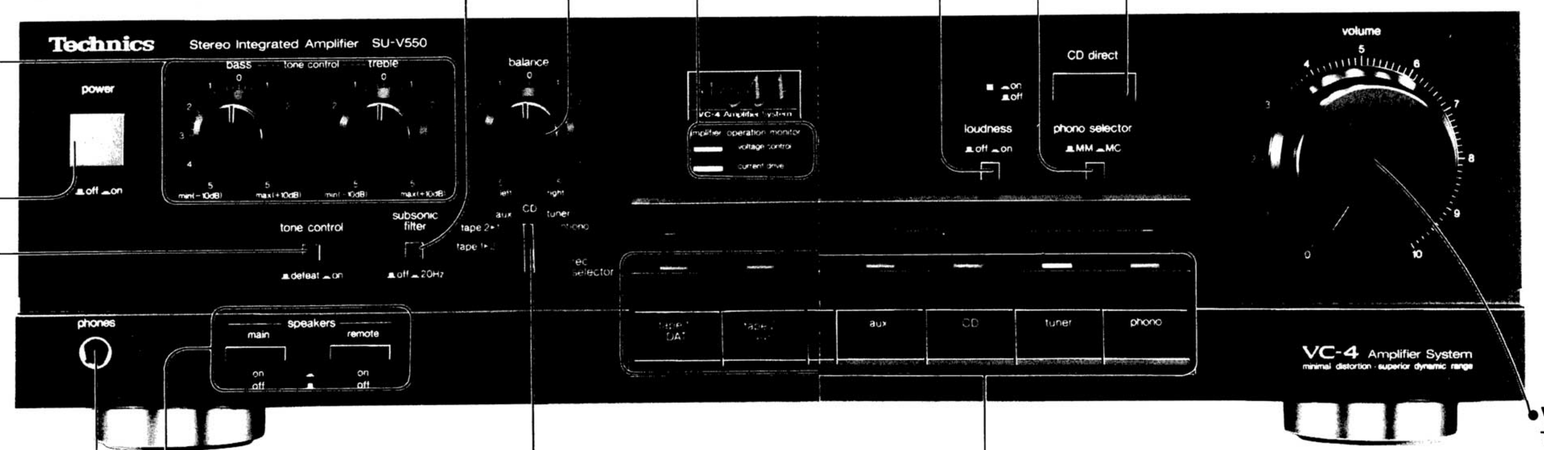

•Recording-mode selector (rec selector)
This selector is used to select the signal to be recorded by the connected tape deck.
tape 1▶2:
Set to this position to record from tape deck 1 to tape deck 2.
tape 2▶1:
Set to this position to record from tape deck 2 to tape deck 1.
aux:
Set to this position to record the signals from equipment connected to the "AUX" terminals.
CD:
Set to this position to record from a compact disc.
tuner:
Set to this position to record from phono discs
phono:
Set to this position to record from radio broadcasts.

•Loudness switch (loudness)
Set to the "on" position when listening to music at a low volume. Auditory perception of sound in the low frequency range falls off at low volume, but when the switch is in this position, this deficiency is compensated for, so that the full impact of the musical performance can be enjoyed.

•Phono cartridge selector (phono selector)
This selector should be set to the position which corresponds to the type of cartridge used on the turntable.
MM (▂ ▂ ▮):
Set to this position when using a moving-magnet type cartridge or high-output moving-coil cartridge (1 mV or more).
MC (▮ ▂ ▂):
Set to this position when using a moving-coil type cartridge (less than 1 mV).

•Compact disc direct-through switch (CD direct)
Even better tone quality of the very high quality signals from a compact disc can be obtained by routing these signals directly to the volume level adjustment, without passing them through an input selector.
When this switch is set to the "on" position, the sound source selected by the input selectors cannot be heard.

•Input selectors/indicators (input selector)
Press to select the sound source to be listened.
The corresponding indicator illuminates during operation to indicate the selected sound source.
tape 1/DAT:
Press this button to playback or monitor the sound of a tape deck or other equipment connected to the "TAPE 1/DAT" terminals on the rear panel.
tape 2/ext:
Press this button to playback or monitor the sound from a tape deck connected to the "TAPE 2/EXT" terminals on the rear panel.
aux:
Press this button to listen to sound from a video disc player or other equipment connected to the "AUX" terminals on the rear panel.
CD:
Press this button to listen to a compact disc.
tuner:
Press this button to listen to radio broadcasts.
phono:
Press this button to listen to phono discs.

•Volume control (volume)
This control is used to adjust the volume level.
Be absolutely sure to set this control to a low position ("0→1") before switching the power ON. After the power is switched ON, please wait several seconds before increasing the volume level.

■ CONNECTIONS

"CD" terminals

Connect a compact disc player.

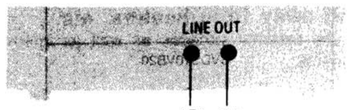

Compact disc player (option)

"TAPE 1/DAT" terminals

In addition to a tape deck, the analog terminals of a digital audio tape deck (DAT) can be connected here.
If the digital audio tape deck is connected, connect the tape deck to the "TAPE 2/EXT" terminals.

Tape deck 1 (option)

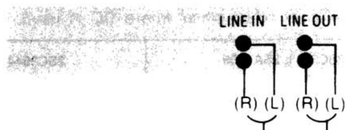

Stereo connection cables (option)

(R) (L)

(L) (R) (L) (R)

"PHONO" terminals

Connect a turntable.

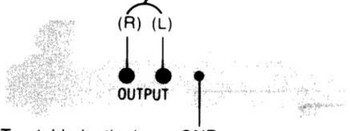

Turntable (option)

GND

Stereo connection cable (option)

(L)
(R)

Ground wire (option)

"TUNER" terminals

Connect a tuner.

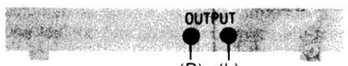

Tuner (option)

(R) (L)

"AUX" terminals

Connect a video disc player etc. These terminals are audio playback only.

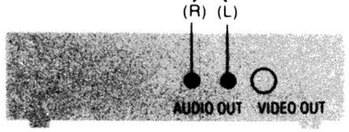

Video disc player (option)

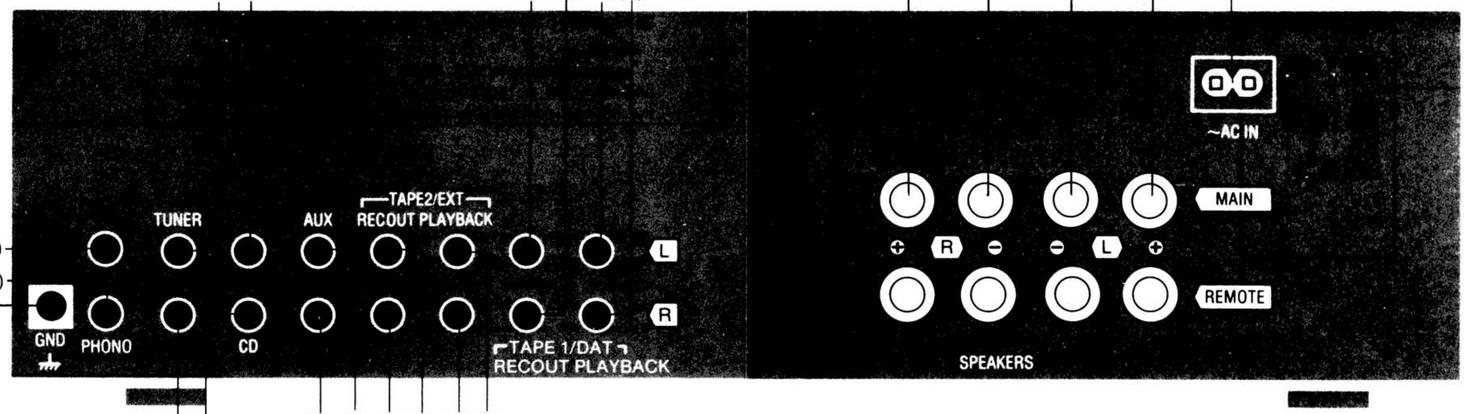

(R) (L)

(R) (L) (R) (L) (R) (L)

Stereo connection cables (option)

"TAPE 2/EXT" terminals

Connect a graphic equalizer or a second tape deck, etc.

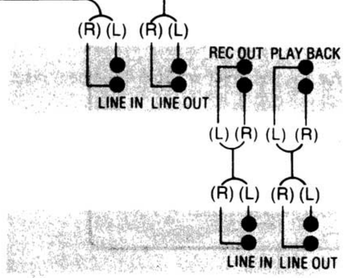

Graphic equalizer (option)

Tape deck 2 (option)

***Phono input capacitance is about 100 pF.**

Speaker connection cords (option)

Household AC outlet

AC power supply cord (included)

For United Kingdom

Household AC outlet

Fit a suitable plug to the AC power supply cord.

The configuration of the AC outlet and AC power supply cord differs according to area.

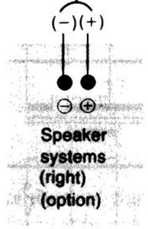

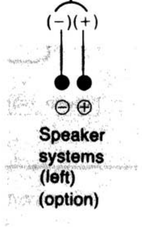

■ **Load impedance:**
MAIN and REMOTE : 8~16Ω
MAIN or REMOTE : 4~16Ω

This unit

"SPEAKERS" terminals

■ **Connection of speaker wires**

1. Strip off the outer covering, and twist the center conductor.

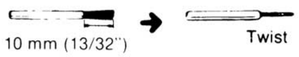

2. Turn 5 or 6 times.

3. Insert wire and tighten screw completely. Pull the wire to assure a proper connection.

Notes:

1. To prevent damage to circuitry, never short plus (+) and minus (−) speaker terminals.

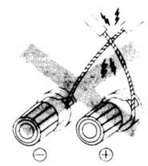

2. Be sure to only connect positive (+) cords to positive (+) terminals, and negative (−) cords to negative (−) terminals.

■ **"REMOTE" terminals**

Connection to second pair of speakers.

■ DISASSEMBLY INSTRUCTIONS

Ref. No. 1	How to remove the cabinet
Procedure 1	•Remove the 5 screws (❶~❺).

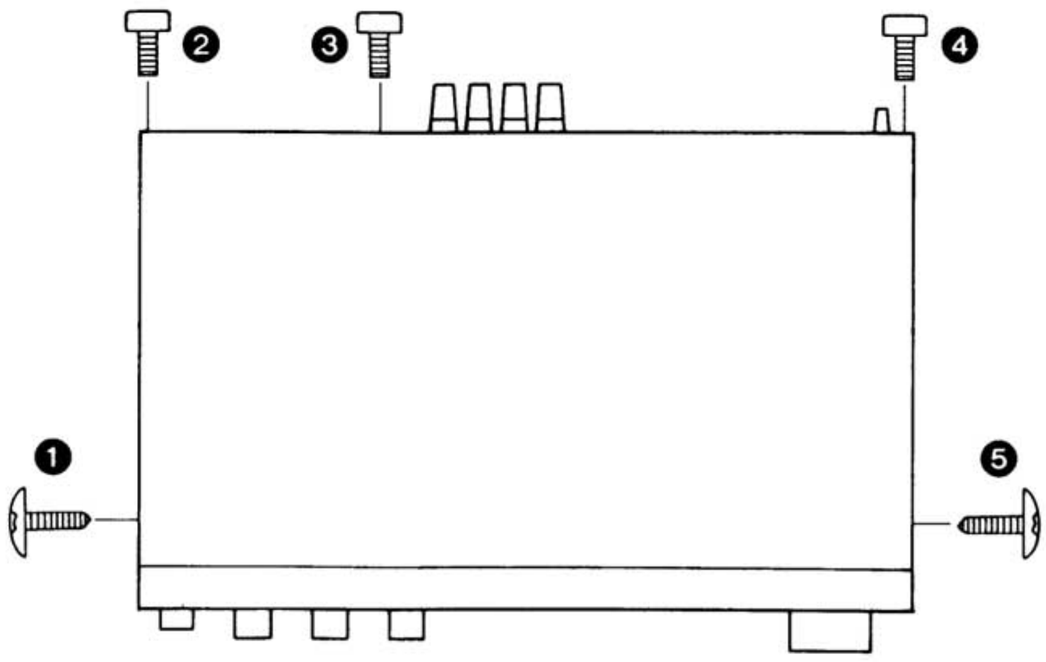

Ref. No. 2	How to remove the power switch P.C.B.
Procedure 1→2	1. Remove the power switch knob by pushing it from behind the front panel. 2. Remove the 2 screws (❶, ❷).

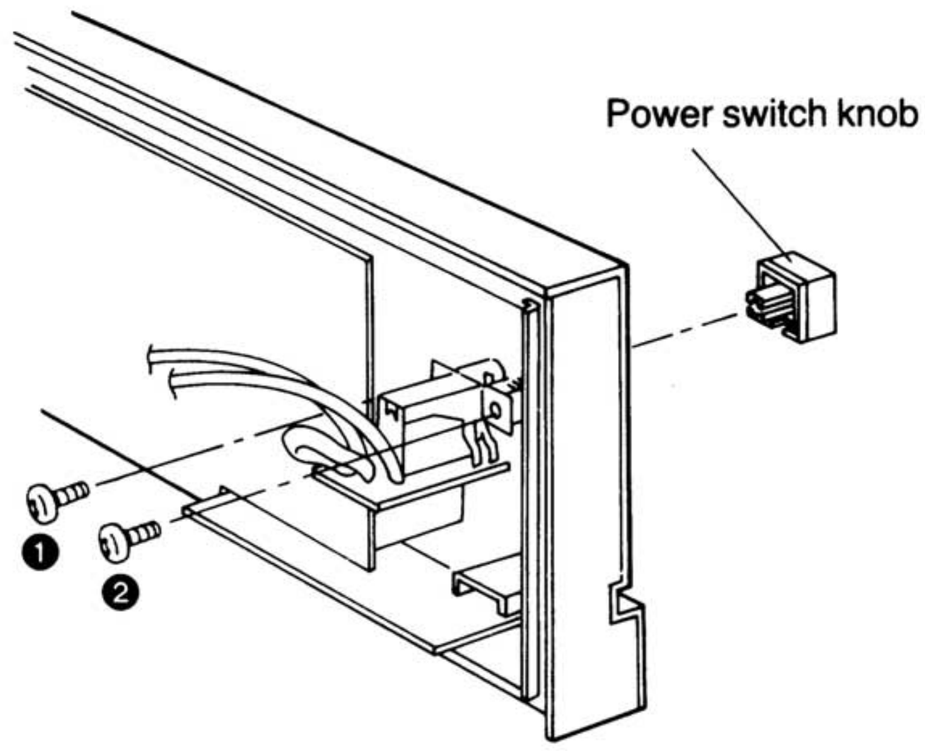

Ref. No. 3	How to remove the front panel, the rec selector and the volume P.C.B.
Procedure 1→3	1. Remove the 4 screws (❶~❹). 2. Pull out the 5 knobs (❺~❾). To prevent damage to the recording selector knob when removing it with a pair of pliers, wrap it up with a piece of cloth as shown. 3. Remove the 5 nuts (❿~⓮) and the 4 ornaments (⓯~⓲). 4. Remove the 2 connectors (J1, J2).

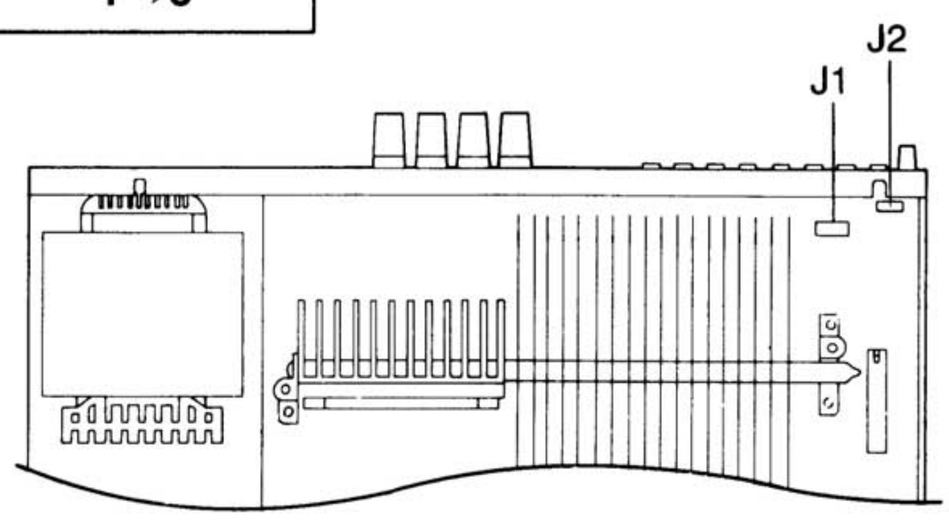

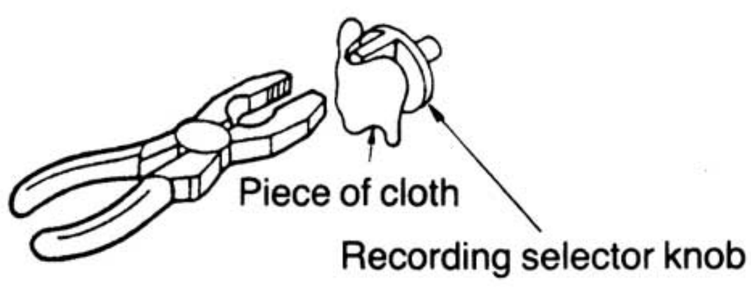

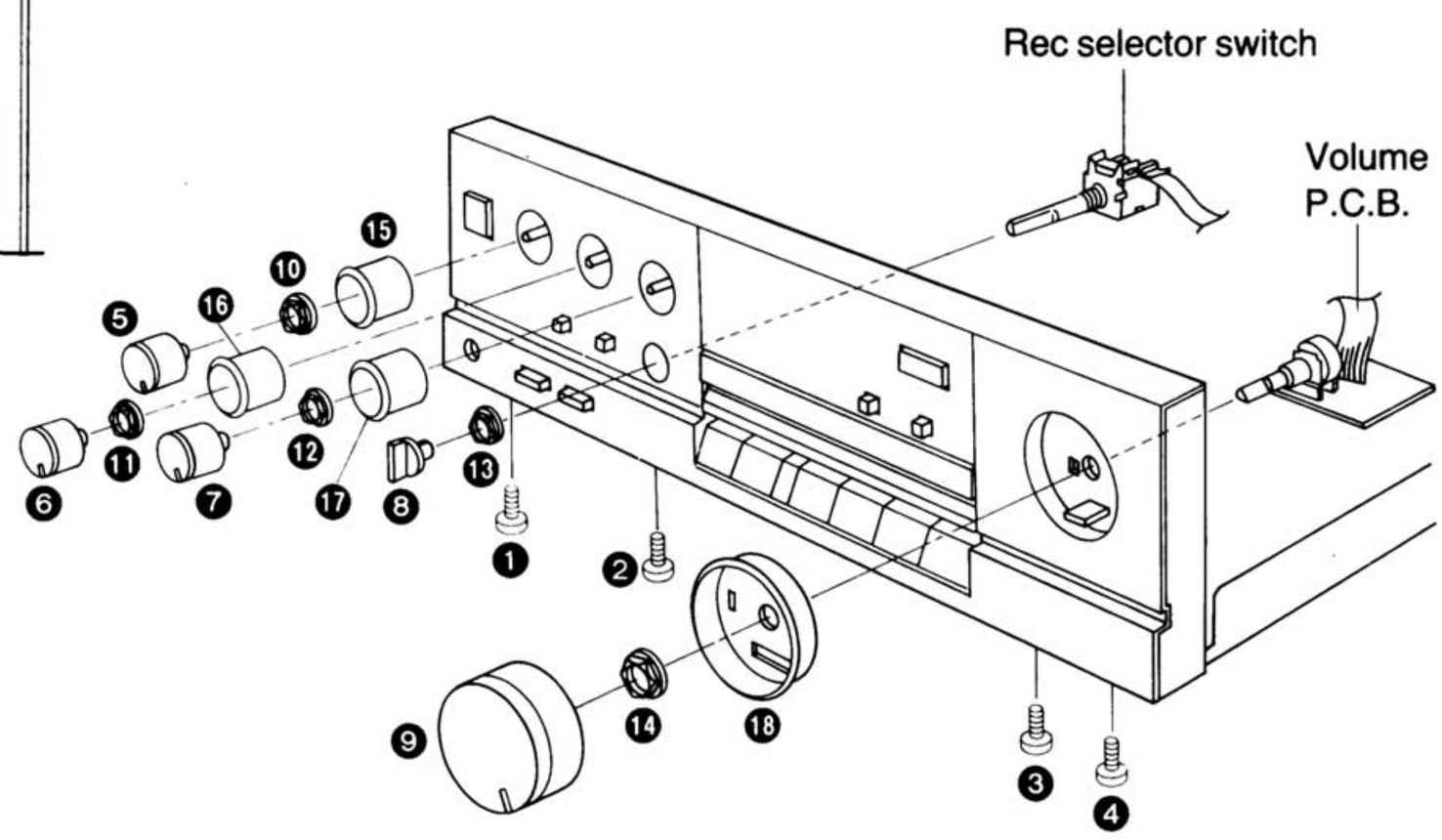

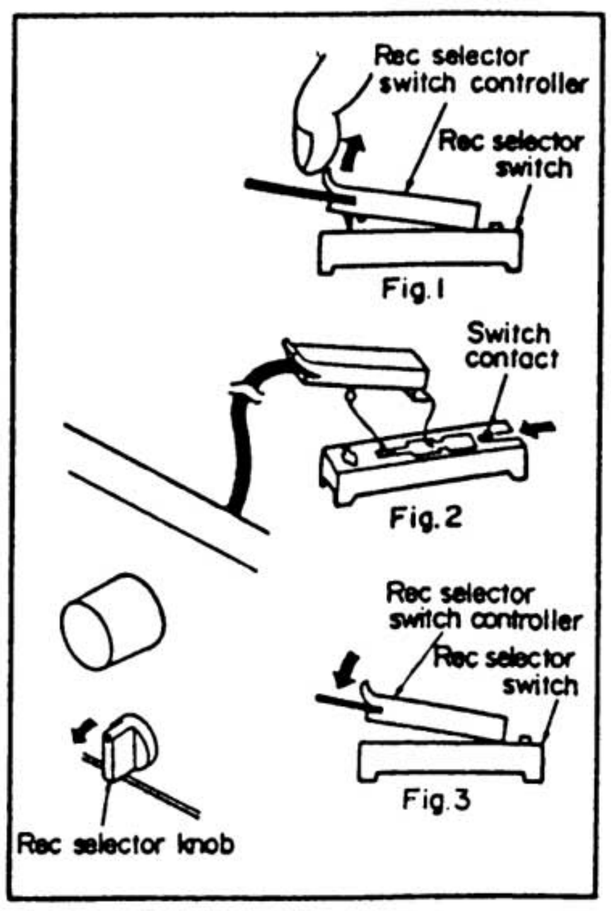

How to remove the rec selector switch controller

•Pull up the rec selector switch controller in the direction of the arrow as shown in figure 1 and then remove it. (See Fig. 1)

How to replace the rec selector switch controller

1. Push the switch contact in the direction of the arrow. (See Fig. 2)
2. Rotate the rec selector knob counterclockwise. (See Fig. 2)
3. Install the rec selector switch controller in the rec selector switch. (See Fig. 3)

Ref. No. 4	How to remove the control, the phones and speaker P.C.B.
Procedure 1→2→4	1. Remove the screw (❶). 2. Release the 2 claws Ⓐ. 3. Remove the phones and speaker P.C.B., in the direction of the arrow Ⓐ. 4. Release the 10 claws Ⓑ. 5. Remove the control P.C.B., in the direction of the arrow Ⓑ.

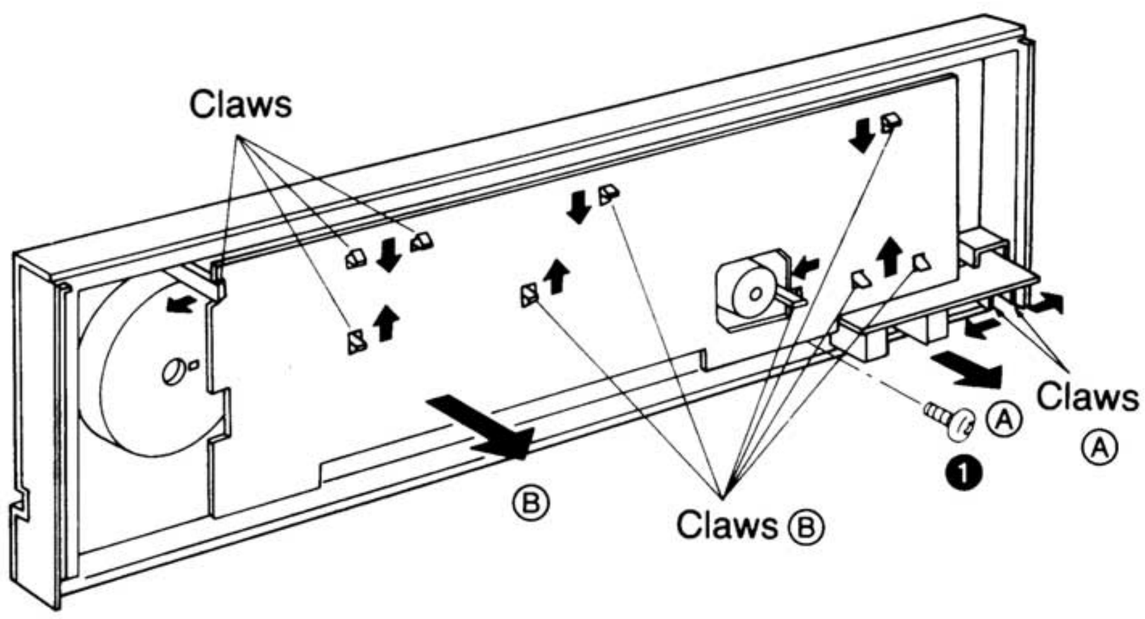

Ref. No. 5	How to remove the rear panel
Procedure 1→2→5	•Remove the 13 screws (❶~⓭).

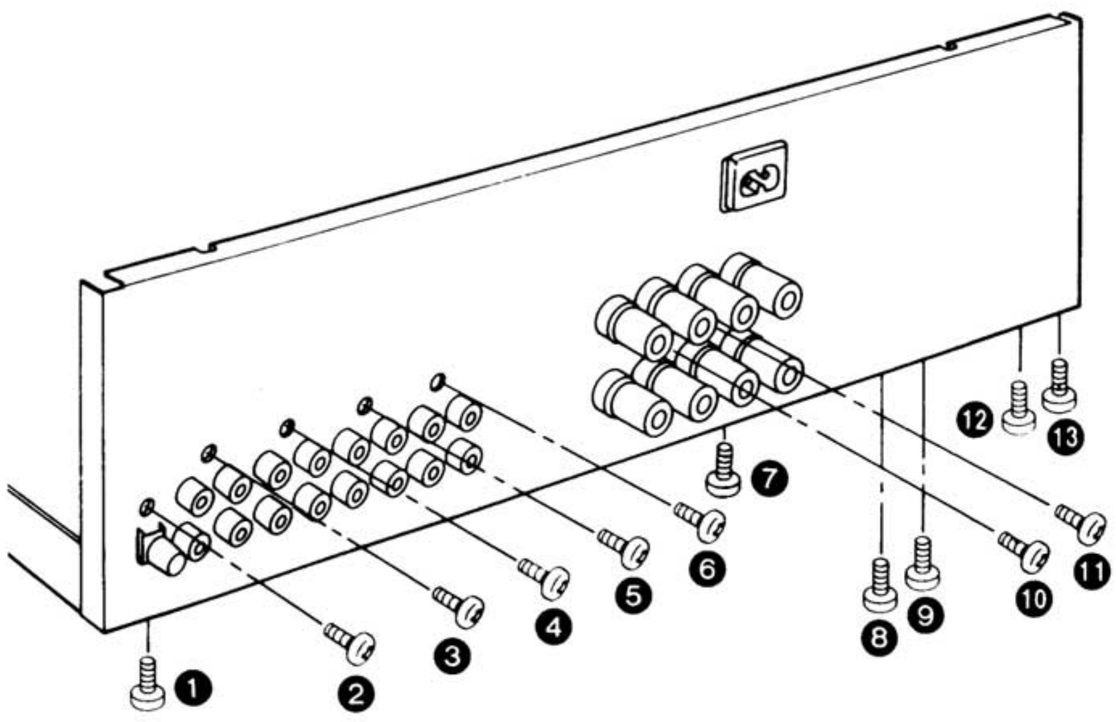

Ref. No. 6	How to remove the main P.C.B.
Procedure 1→2→5→6	•Remove the 4 screws (❶~❹). **Note:** To check the unit for continuity when it is turned on, place it on its right side panel where the power IC is installed. This will prevent abnormal temperature from rising inside the unit.

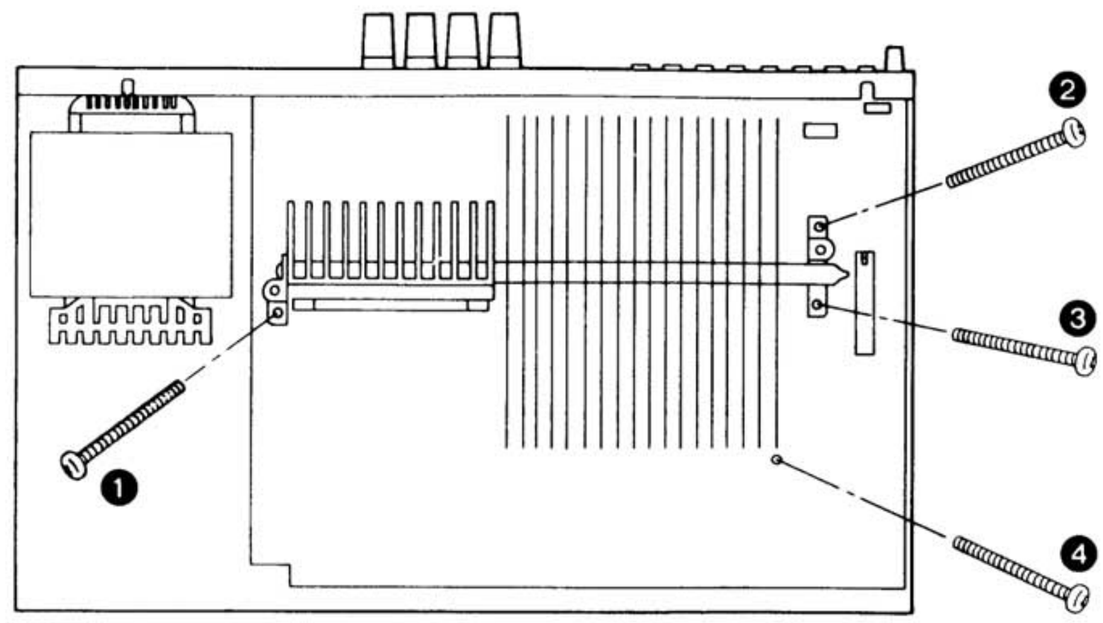

Ref. No. 7	How to remove the power IC
Procedure 1→2→5→6→7	1. Remove the 2 screws (❶, ❷). 2. Unsolder the terminals of the power IC. •When mounting the power IC or regulator transistor. Apply silicone compond (SZZ0L15) to the rear side of power IC or regulator transistor.

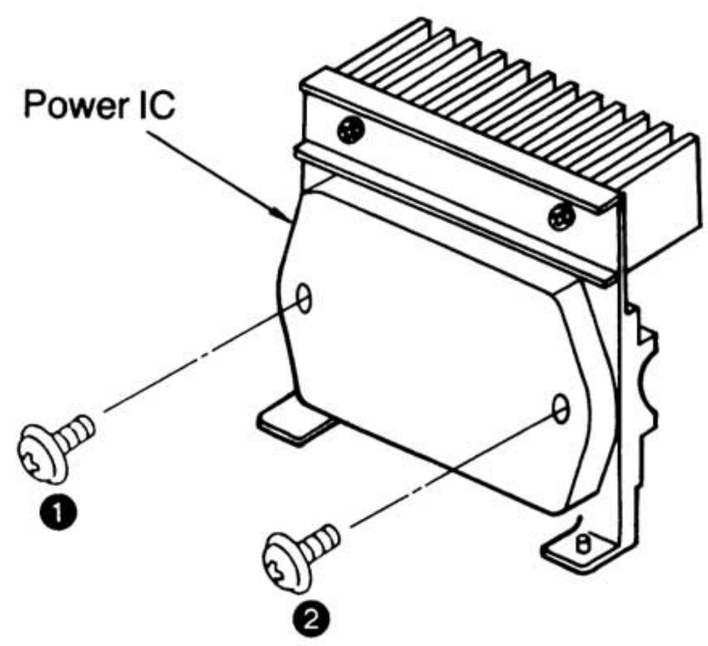

■ CIRCUIT BOARDS AND WIRING CONNECTION DIAGRAM

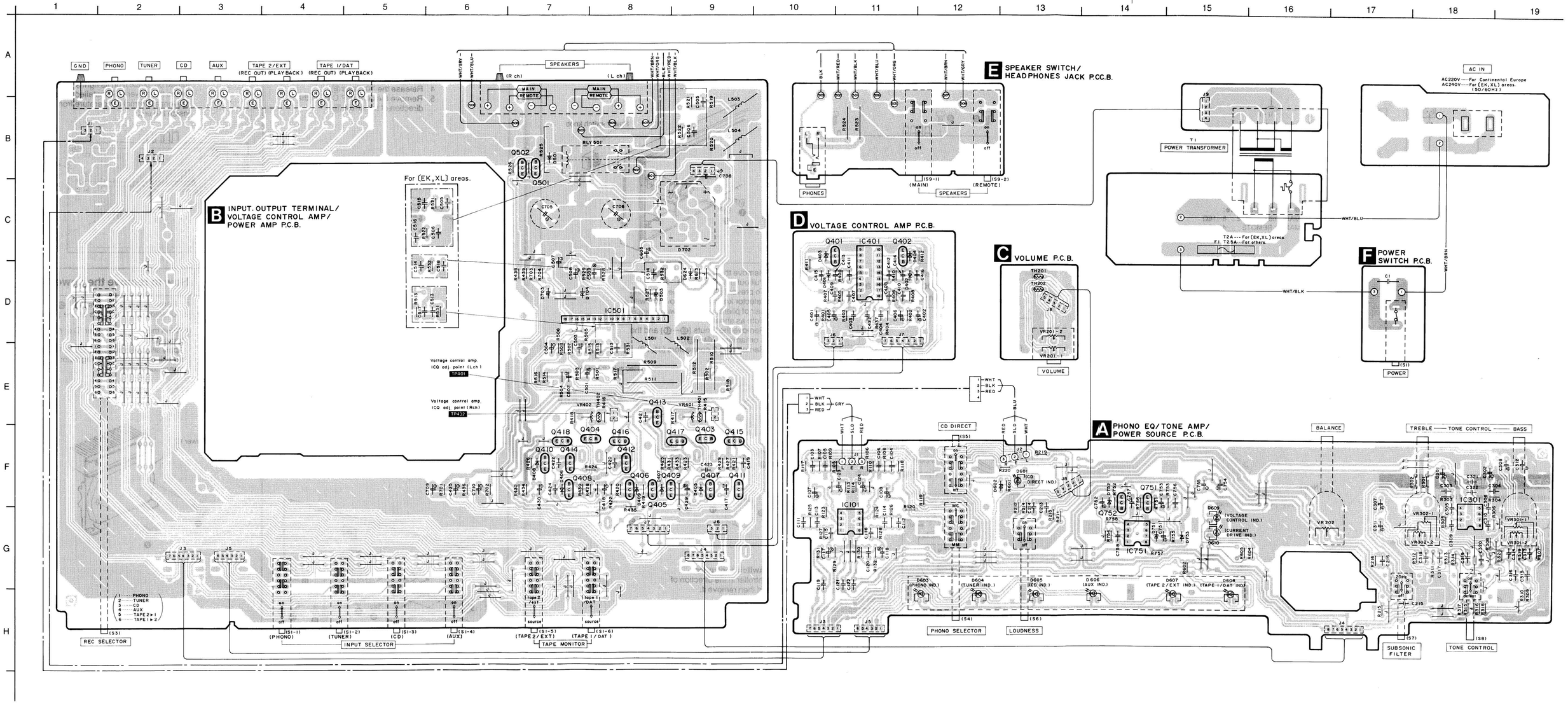

■ TERMINAL GUIDE OF IC'S, TRANSISTORS AND DIODES

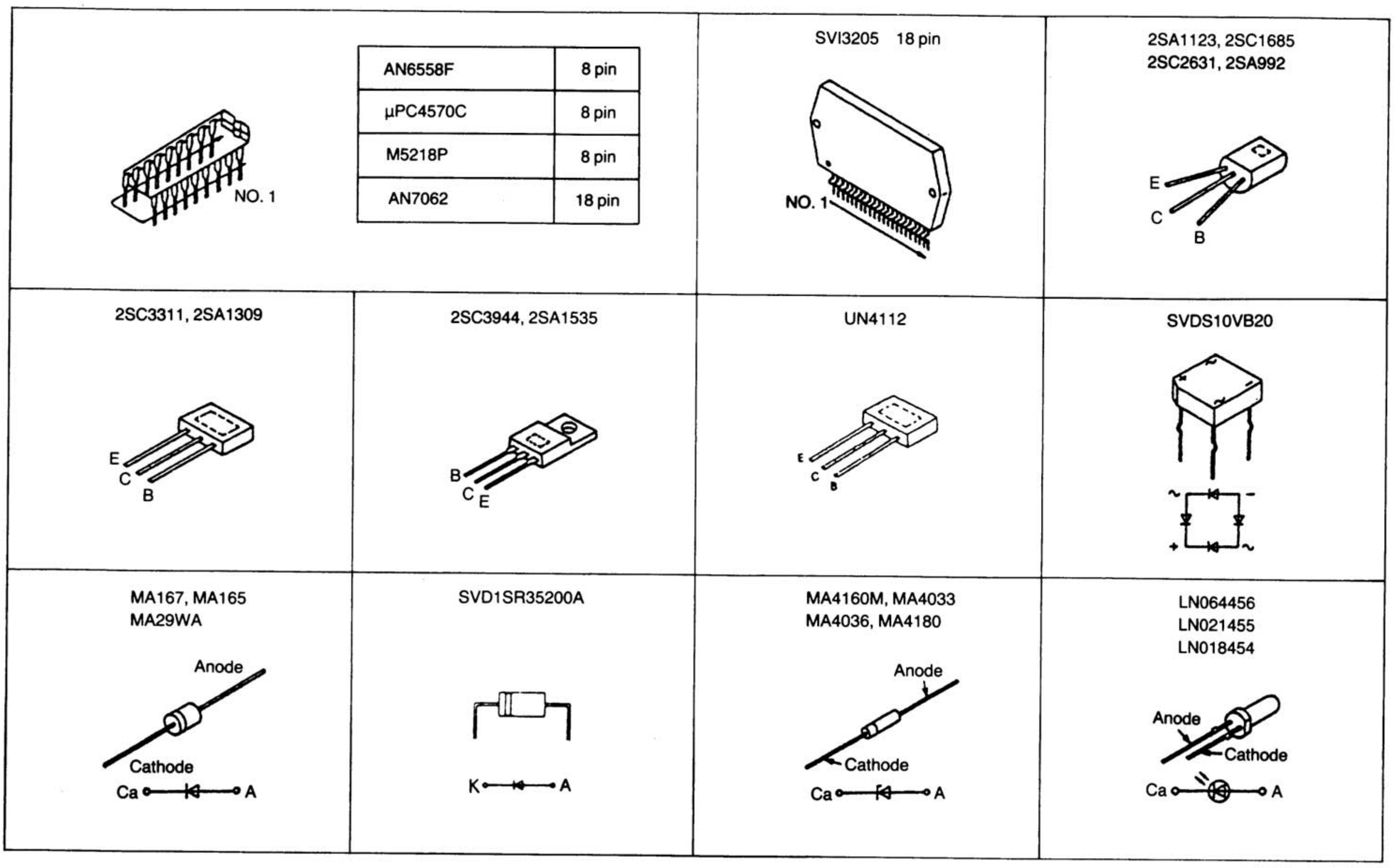

Power Source For (XA) area.

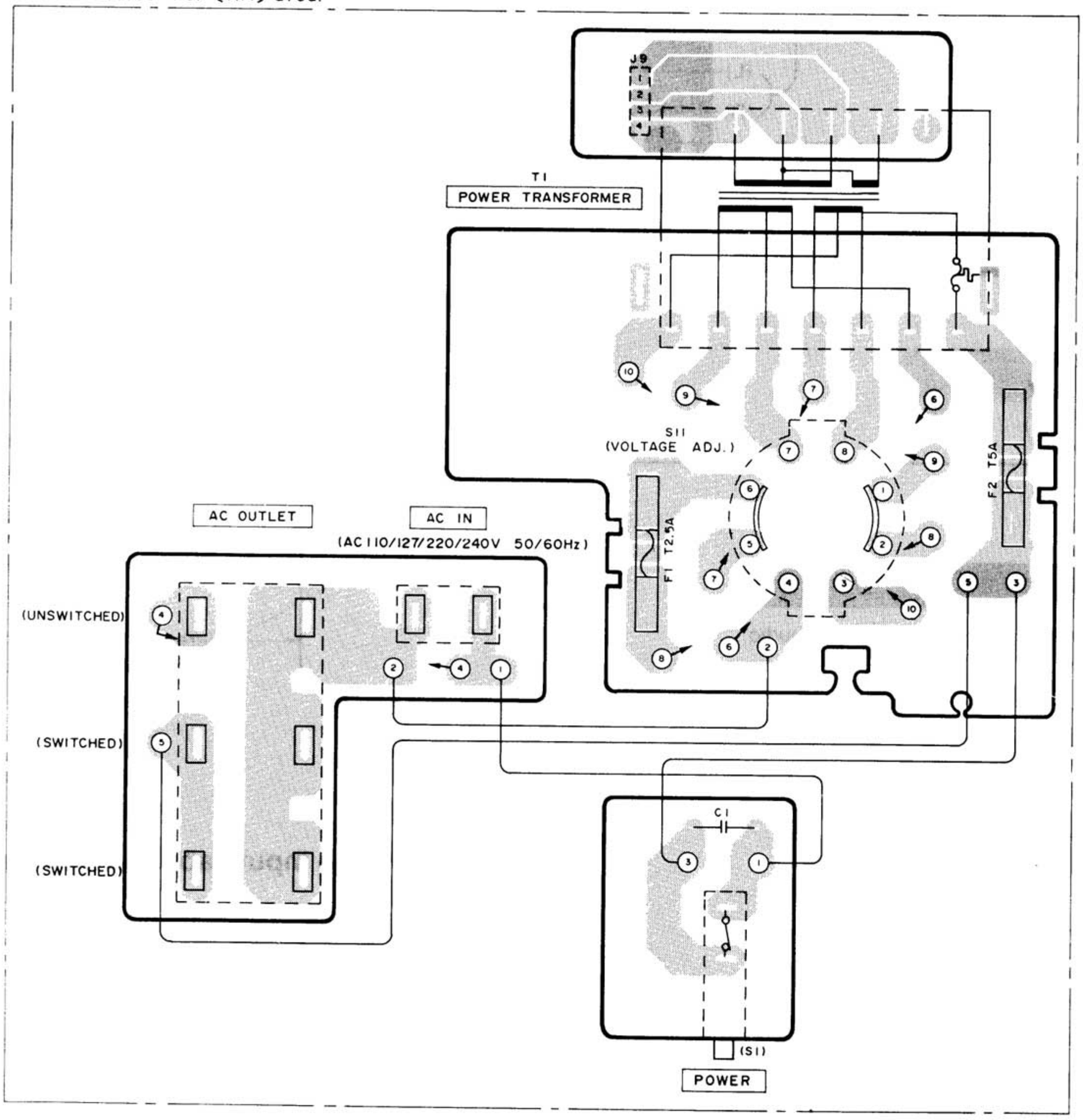

■ SCHEMATIC DIAGRAM

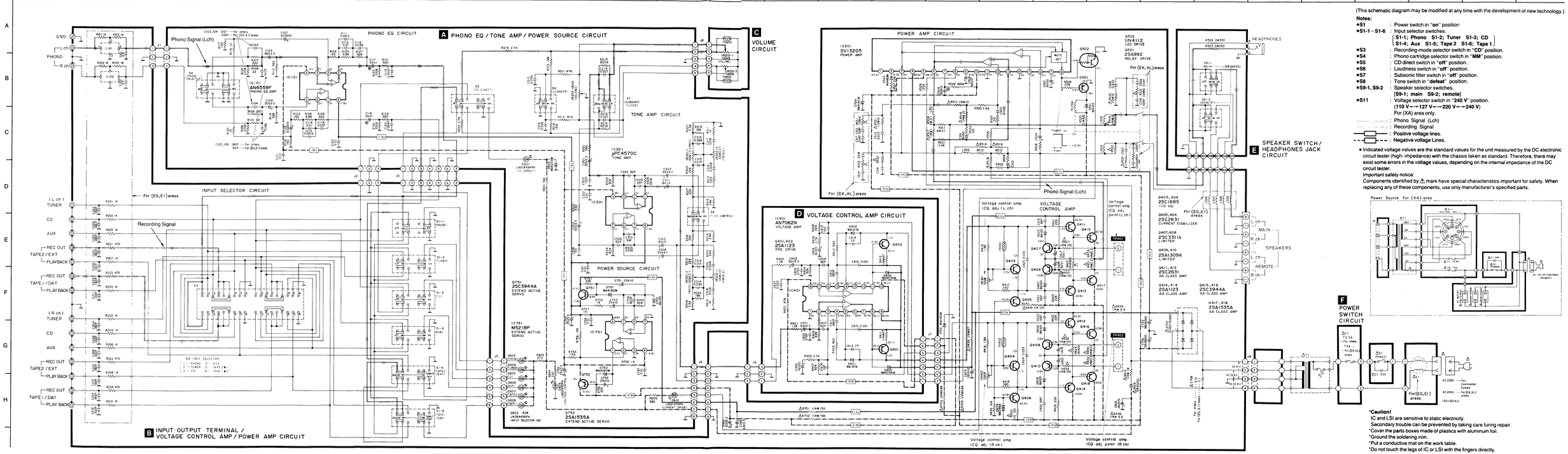

(This schematic diagram may be modified at any time with the development of new technology.)

Notes:

- **•S1** : Power switch in "**on**" position
- **•S1-1 – S1-6** : Input selector switches. (**S1-1; Phono S1-2; Tuner S1-3; CD S1-4; Aux S1-5; Tape 2 S1-6; Tape 1**)
- **•S3** : Recording-mode selector switch in "**CD**" position.
- **•S4** : Phono cartridge selector switch in "**MM**" position.
- **•S5** : CD direct switch in "**off**" position.
- **•S6** : Loudness switch in "**off**" position.
- **•S7** : Subsonic filter switch in "**off**" position.
- **•S8** : Tone switch in "**defeat**" position.
- **•S9-1, S9-2** : Speaker selector switches. (**S9-1; main S9-2; remote**)
- **•S11** : Voltage selector switch in "**240 V**" position. (**110 V ~ – 127 V ~ – 220 V ~ – 240 V**) For (XA) area only.

Signal line: Phono Signal (Lch)
Recording Signal
Positive voltage lines.
Negative voltage Lines.

• Indicated voltage values are the standard values for the unit measured by the DC electronic circuit tester (high- impedance) with the chassis taken as standard. Therefore, there may exist some errors in the voltage values, depending on the internal impedance of the DC circuit tester.

Important safety notice:
Components identified by ⚠ mark have special characteristics important for safety. When replacing any of these components, use only manufacturer's specified parts.

***Caution!**
IC and LSI are sensitive to static electricity.
Secondary trouble can be prevented by taking care furing repair.
*Cover the parts boxes made of plastics with aluminum foil.
*Ground the soldering iron.
*Put a conductive mat on the work table.
*Do not touch the legs of IC or LSI with the fingers directly.

■ BLOCK DIAGRAM

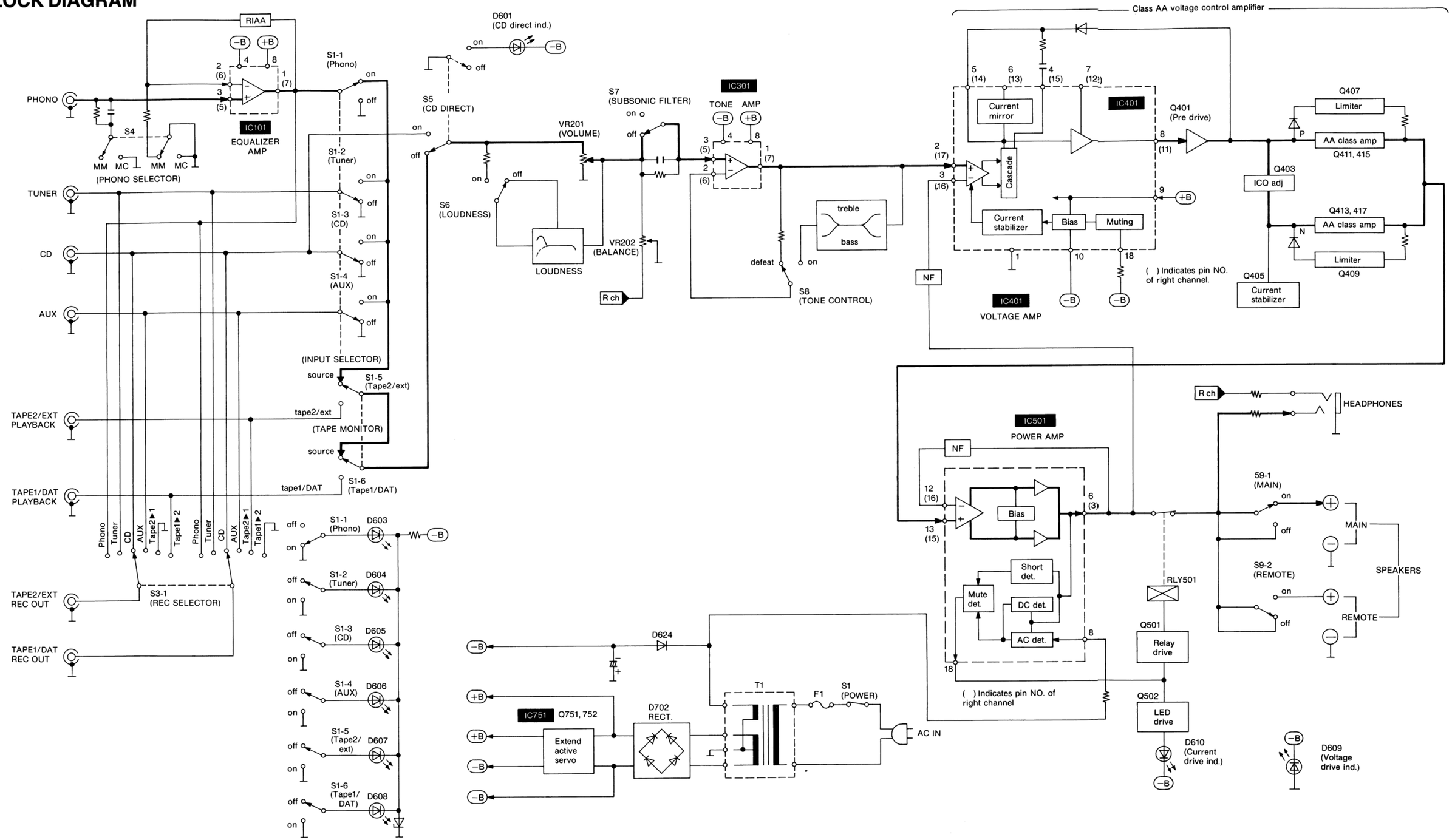

■ MEASUREMENTS AND ADJUSTMENTS

Control positions and equipment used.

- Volume knob.....∞ (Minimum)
- Main speaker selector.....off
- Remote speaker selector.....off
- DC electronic voltmeter(EVM)

VOLTAGE CONTROL(V)AMP.IDLING(ICQ) ADJUSTMENT

1. Test equipment connection is shown in figure. (Connect the DC EVM on both channels.)
2. Completely turn the (V) amp. adjusting volumes (**VR401 , VR402**) counter-clockwise.
3. Turn ON the set when it is cold, and 15 sec.later, adjust **VR401** and **VR402** so that the voltage is **50mV.**
   Also, check that the voltage is **60 ~ 85mV** (standard : **80mV)** after lapse of **10 - 15 minutes.** (Below **85mV** after lapse of **60 min.)**

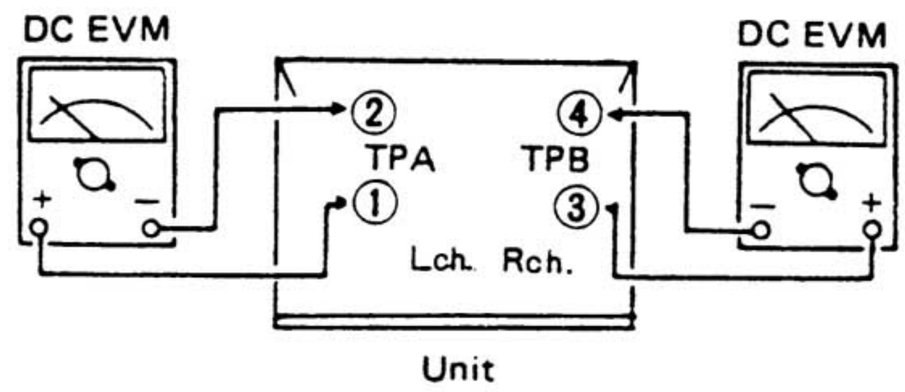

TPA = ①TP401(+) ,TPB = ③TP402(+)
②TP401(-) ④TP402(-)

- Adjustment points

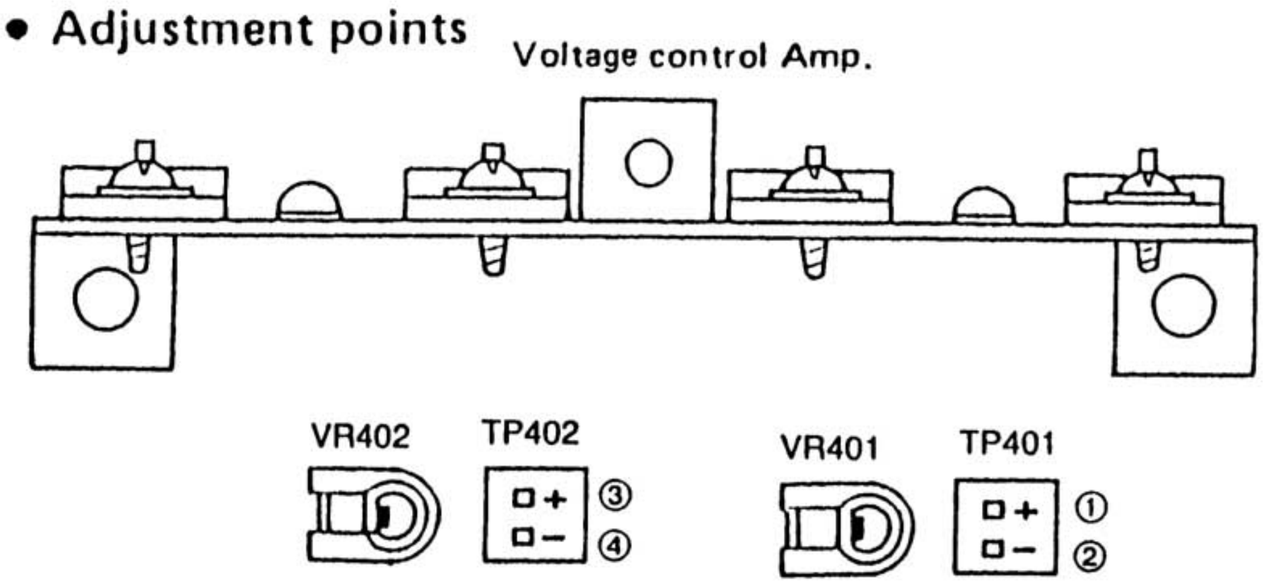

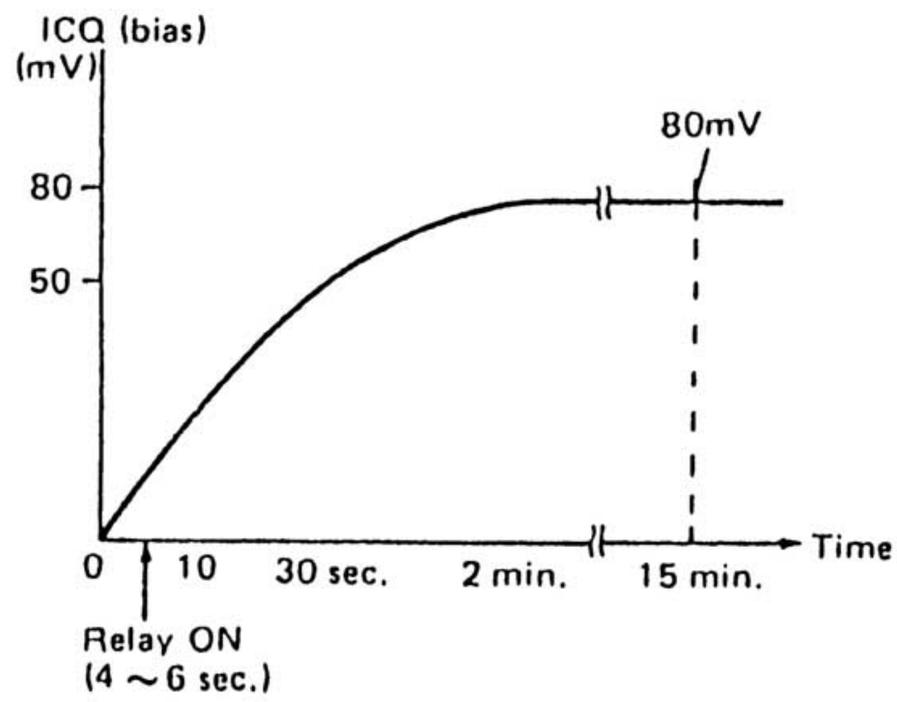

■ REPLACEMENT PARTS LIST

Notes : * Important safety notice :
Components identified by ⚠ mark have special characteristics important for safety. When replacing any of these components use only manufacturer's specified parts.
* Bracketed indications in Ref. No. columns specify the area. (Refer to the first page for area.)
Parts without these indications can be used for all areas.

•PACKING PARTS LIST

Ref. No.	Part No.	Description
PACKING MATERIAL		
P1 Ⓚ (E, EG, EK, EH) (EB, EI, XL) (XA)	SPG6390	PACKING CASE
P1 Ⓚ (EF)	SPG6391	PACKING CASE
P1 Ⓢ (E, EG, EK, EH) (EB, EI, XL) (XA)	SPG6392	PACKING CASE
P1 Ⓢ (EF)	SPG6393	PACKING CASE
P2	SPS5255	PAD, FRONT
P3	SPS5256	PAD, REAR
P4	SPS5185	PAD
P5 Ⓚ	SPP723	PROTECTION COVER
P5 Ⓢ	SPP723	PROTECTION COVER
ACCESSORIES		
A1 (E, EF, EH, EB)	SQF13390	INSTRUCTION BOOK
A1 (EG)	SQF13391	INSTRUCTION BOOK
A1 (EK, XL)	SQF13392	INSTRUCTION BOOK
A1 (XA)	SQF13393	INSTRUCTION BOOK
A1 (EI)	SQF13394	INSTRUCTION BOOK
A2 ⚠ (XA)	RJP120ZBS-H	AC PLUG ADAPTOR
A3 ⚠ (E, EG, EF, EH) (EB, EI)	SFDAC05E03	POWER CORD
A3 ⚠ (XA)	SJA168	POWER CORD
A3 ⚠ (XA)	SJA173	POWER CORD
A3 ⚠ (EK)	SJA193	POWER CORD

•CABINET PARTS LIST

Ref. No.		Part No.	Description
CABINET AND CHASSIS			
1		SGPUV550-KE	REAR PANEL
(EF, EH, EB)			
(EI)			
1		SGP7430-1C	REAR PANEL
(XA)			
1		SGP7430E	REAR PANEL
(E)			
1		SGP7430F	REAR PANEL
(EG)			
1		SGP7430G	REAR PANEL
(EK)			
1		SGP7430H	REAR PANEL
(XL)			
3		SJS9231A	AC INLET COVER
(E, EG, EK, EF)			
(EH, EB, EI)			
(XA)			
3		SJS9234A	AC INLET COVER
(XL)			
4		SJS9328A	AC OUTLET COVER
(XA)			
5		SKU11280-3	BOTTOM BOARD
(XA)			
5		SKU11280-4	BOTTOM BOARD
(E, EG, EK, EF)			
(EH, EB, EI)			
(XL)			
6	Ⓚ	SBC666-5	BUTTON, POWER
6	Ⓢ	SBC666	BUTTON, POWER
7		SUB254	ROD
8		SKL308	SET FOOT(L)
9		SKL309	SET FOOT(R)
10		SHE187-2	HOLDER, P.C.B.
11		SHE237	HOLDER, P.C.B.
[XA]			
12	Ⓢ	SMC1255-1	SHIELD PLATE
13	Ⓚ	SBC439-2	BUTTON, SPEAKER
13	Ⓢ	SBC439	BUTTON, SPEAKER
14	Ⓚ	SBC719-1	BUTTON, TONE/SUB/LOUD
14	Ⓢ	SBC719	BUTTON, TONE/SUB/LOUD
15	Ⓚ	SBC820	BUTTON, CD
15	Ⓢ	SBC820-1	BUTTON, CD
16	Ⓚ	SGX7982-2	HOLDER, M.VOL
16	Ⓢ	SGX7982-3	HOLDER, M.VOL
17	Ⓚ	SGX8007	ORNAMENT, TONE.VOL
17	Ⓢ	SGX8007-1	ORNAMENT, TONE.VOL
18	Ⓢ	SHW82S25A	WASHER
19		XTB3+8FFZ	SCREW
20		XTB3+10G	SCREW
21	Ⓚ	SMC6407-1	SHIELD COVER
22		XTBS3+10JFZ1	TAPPING SCREW
23		XTB3+20J	SCREW
24		XYN3+F14	TAPPING SCREW
25		XTW3+10T	SCREW
26		XTB3+30J	SCREW
(XA)			
27		SNE4021-1	NUT

Ref. No.		Part No.	Description
28	Ⓚ	SKC2220K991	CABINET
28	Ⓢ	SKC2220S981	CABINET
29	Ⓚ	SBN1246	KNOB, M.VOL
29	Ⓢ	SBN1246-1	KNOB, M.VOL
30	Ⓚ	SBN1247	KNOB, TONE.VOL
30	Ⓢ	SBN1248	KNOB, TONE.VOL
31	Ⓚ	SNE2129-3	SCREW
31	Ⓢ	SNE2129-2	ORNAMENT SCREW
32	Ⓚ	SBN1089-3	KNOB, REC
32	Ⓢ	SBN1089-4	KNOB, REC
35		SJF3070NJ	TERMINAL, PHONO
36		SJF3071NJ	TERMINAL, INPUT
37		SJJD17B	JACK, HEADPHONES
38		SJF4819	TERMINAL, SP
39		SMC1299	SHIELD PLATE
40		SJS305-1	JACK, P.TRANSFORMER
(E, EG, EK, EF)			
(EH, EB, EI)			
(XL)			
41	⚠	SJT388	FUSE HOLDER
42	⚠	SJS9231-1B	AC INLET
(E, EG, EK, EF)			
(EH, EB, EI)			
(XA)			
42	⚠	SJS9234B	AC INLET
(XL)			
45		SUS227	SPRING
47		SJS50780WL	CONNECTOR(7P)
48		SJS50880WL	CONNECTOR(8P)
49		SJS50680WL	CONNECTOR(6P)
50		SJS50378JQ	CONNECTOR (3P)
51		SJS50778JQ	SOCKET(7P)
52		SJT3319	CONNECTOR(3P)
53		SJT3415	CONNECTOR(4P)
54		SJT3209	TERMINAL, TEST POINT
55		SHR415	LOCK PIN
56		XTW3+8T	SCREW
57		SMC1300	SHIELD PLATE
58		SJT30747WL	CONNECTOR(7P)
59		SJT30847WL	CONNECTOR(8P)
60		SJT30647WL	CONNECTOR(6P)
61		SJT30345JQ	TERMINAL (3P)
62		SJT30745JQ	CONNECTOR(7P)
63		SME103-4	SHIELD PLATE, P.C.B.
65		SJS702-1	JACK,SOCKET, P.TRANSFORMER
(XA)			
68	⚠	SJS9328B	SOCKET, OUTLET
(XA)			
69	Ⓚ	SGWUV550-KE	FRONT PANEL
69	Ⓢ	SGWUV550-SE	FRONT PANEL
70	Ⓚ	SGXUV550-KE1	FRONT GRILLE (R)
70	Ⓢ	SGXUV550-SE1	FRONT GRILLE (R)
70A		SBC796-8	BUTTON, INPUT
70A		SBC796-9	BUTTON, INPUT
72	Ⓚ	SGXUV450-KE2	FRONT GRILLE(L)
72	Ⓢ	SGXUV450-SE2	FRONT GRILLE(L)
73		ESA335028B	SWITCH, REC SELECTOR

■ EXPLODED VIEW

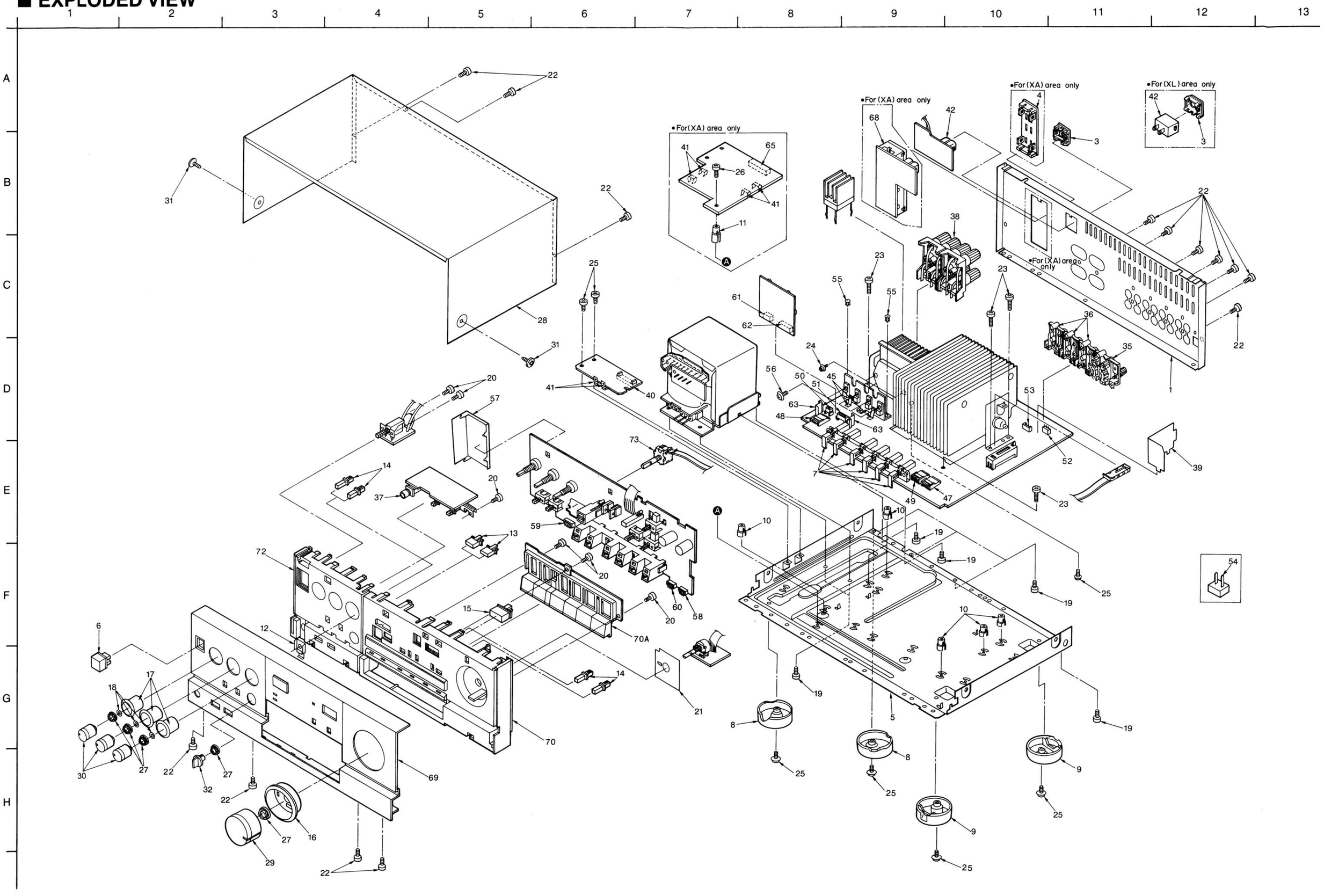

•ELECTRICAL PARTS LIST

Ref. No.	Part No.	Description
INTEGRATED CIRCUITS		
IC101	AN6558F	I.C. PHONO/EQ
IC301	UPC4570C	I.C. TONE CONTROL
IC401	AN7062N	I.C. V.AMP
IC501	SVI3205	I.C. P.AMP/C.AMP
IC751	M5218P	I.C. ACTIVE SERVO
TRANSISTORS		
Q401	2SA1123R	TRANSISTOR
Q402	2SA1123R	TRANSISTOR
Q403	2SC1685NCQRS	TRANSISTOR
Q404	2SC1685NCQRS	TRANSISTOR
Q405	2SC2631-Q	TRANSISTOR
Q406	2SC2631-Q	TRANSISTOR
Q407	2SC3311A-Q	TRANSISTOR
Q408	2SC3311A-Q	TRANSISTOR
Q409	2SA1309Q	TRANSISTOR
Q410	2SA1309Q	TRANSISTOR
Q411	2SC2631-Q	TRANSISTOR
Q412	2SC2631-Q	TRANSISTOR
Q413	2SA1123R	TRANSISTOR
Q414	2SA1123R	TRANSISTOR
Q415	2SC3944AQRS	TRANSISTOR
Q416	2SC3944AQRS	TRANSISTOR
Q417	2SA1535AQRS	TRANSISTOR
Q418	2SA1535AQRS	TRANSISTOR
Q501	2SA992EFP	TRANSISTOR
Q502	UN4112TA	TRANSISTOR
Q751	2SC3944AQRS	TRANSISTOR
Q752	2SA1535AQRS	TRANSISTOR
DIODES		
D401	MA167	DIODE
D402	MA167	DIODE
D403	MA4036MTA	DIODE
D404	MA4036MTA	DIODE
D405	MA165	DIODE
D406	MA165	DIODE
D407	MA165	DIODE
D408	MA165	DIODE
D409	MA29WA	DIODE
D501	MA165	DIODE
D503	MA4160M	DIODE
D601	LN018454PH	DIODE, L.E.D
D602	MA4033	DIODE
D603	LN064456PH	DIODE, L.E.D
D604	LN064456PH	DIODE, L.E.D
D605	LN064456PH	DIODE, L.E.D
D606	LN064456PH	DIODE, L.E.D
D607	LN064456PH	DIODE, L.E.D
D608	LN064456PH	DIODE, L.E.D
D609	LN021455PH	DIODE, L.E.D
D610	LN021455PH	DIODE, L.E.D
D624 ⚠	SVD1SR35200A	DIODE
D702 ⚠	SVDS10VB20F	DIODE
D703	MA4160M	DIODE
D704	MA4160M	DIODE
D751	MA4180-M	DIODE
D752	MA4180-M	DIODE
D753	MA165	DIODE
VARIABLE RESISTORS		
VR201	EWJK8A539B15	V.R. MAIN VOL
VR202	EVH0YA015G15	V.R. BALANCE
VR301	EWCRYA023C15	V.R. TONE
VR302	EWCRYA023C15	V.R. TONE
VR401	EVND4AA00B52	V.R. I.C.Q ADJUST
VR402	EVND4AA00B52	V.R. I.C.Q ADJUST
THERMISTORS AND VARISTORS		
TH201	ERTD2WHL104S	THERMISTOR
TH202	ERTD2WHL104S	THERMISTOR
TH401	ERTD2WHL104S	THERMISTOR
TH402	ERTD2WHL104S	THERMISTOR
COILS AND TRANSFORMERS		
L1 ⚠ (EG, EI)	SLQZ650MH49	CHOKE COIL
L101 (EG, EI)	SLM1Z33	MPX COIL
L102 (EG, EI)	SLM1Z33	MPX COIL
L501	SLQY07G-50	COIL
L502	SLQY07G-50	COIL
L503	SLQY18G-20	COIL
L504	SLQY18G-20	COIL
L505 (EG, EI)	SLQY07G-50	COIL
L506 (EG, EI)	SLQY07G-50	COIL
L507 (EG, EI)	SLQY07G-50	COIL
L508 (EG, EI)	SLQY07G-50	COIL
T1 ⚠ (E, EG, EF, EH) (EB, EI)	SLT5P298-W	POWER TRANSFORMER
T1 ⚠ (EK, XL)	SLT5P299-W	POWER TRANSFORMER
T1 ⚠ (XA)	SLT5P300-W	POWER TRANSFORMER
FUSES		
F1 ⚠ (EK, XL)	XBA2C20TB0	FUSE 250V, T2A
F1 ⚠ (E, EG, EF, EH) (EB, EI, XA)	XBA2C25TB0	FUSE, T2.5A 250V
F2 ⚠ (XA)	XBA2C50TB0	FUSE, 250 V. T5A
SWITCHES		
S1 ⚠ (E, EG, EK, EF) (EH, EB, EI) (XL)	ESB8249V	SW. POWER
S1 ⚠ (XA)	ESB8249V	SW. POWER
S1-1	SSH656	SWITCH, PHONO
S1-2	SSH656	SWITCH, TUNER
S1-3	SSH656	SWITCH, CD
S1-4	SSH656	SWITCH, AUX
S1-5	SSH656	SWITCH, TAPE2/EXT
S1-6	SSH656	SWITCH, TAPE1/EXT
S3	ESA2682	SWITCH, REC SELECTOR
S4	SSH1239	PUSH SWITCH, PHONO
S5	SSH1215	SWITCH, CD DIRECT
S6	SSH1218	SWITCH, LOUDNESS
S7	SSH1218	SWITCH, SUBSONIC
S8	SSH1218	SWITCH, TONE CONTROL
S9-1	SSH2115	SWITCH, SP MAIN
S9-2	SSH2115	SWITCH, SP REMOTE
S11 ⚠ (XA)	ESE37263	SW. VOLTAG SELECTOR
RELAYS		
RL501	SSY126	RELAY

■ RESISTORS AND CAPACITORS

Notes : * Important safety notice :
Components identified by ⚠ mark have special characteristics important for safety. When replacing any of these components use only manufacturer's specified parts.
* Bracketed indications in Ref. No. columns specify the area. (Refer to the first page for area.)
Parts without these indications can be used for all areas.

Numbering System of Resistor

Example:

ERD	25	F	J	102
Type	Wattage (1/4W)	Shape	Tolerance	Value (1KΩ)
ERX	2	AN	J	471
Type	Wattage (2W)	Shape	Tolerance	Value (470Ω)

Numbering System of Capacitor

Example:

ECKD	1H	102	Z	F
Type	Voltage (50V)	Value (0.001μF)	Tolerance	Peculiarity
ECEA	50	M	330	
Type	Voltage (50V)	Pecliarity	Value (33μF)	

- Capacity values are in microfarads (μF) unless specified otherwise, P = Pico-farads (pF) F = Farads (F).
- Resistance values are in ohms (Ω), unless specified otherwise, 1K = 1,000Ω, 1M = 1,000kΩ

Resistor Type		Wattage		Tolerance
ERD	: Carbon	10 : 1/8W	12 : 1/2W	J : ±5%
ERG	: Metal Oxide	14 : 1/4W	25 : 1/4W	F : ±1%
ERQ	: Fuse Type Metal	1A : 1W	18 : 1/8W	G : ±2%
ERX	: Metal Film	S2 : 1/4W	S1 : 1/2W	J : ±5%
ERD L	: Carbon (chip)	2F : 1/4W	50 : 1/2W	K : ±10%
ERO K	: Metal Film (chip)	2A : 2W	3A : 3W	M : ±20%
ERC	: Solid	6G : 1/10W	8G : 1/8W	
ERF	: Incombustible Box-Shaped			
ERM	: Wire-Wound			
RRJ	: Cip Resistor			
ERJ	: Cip Resistor			

Capacitor Type		Voltage		Tolerance
ECE	: Electrolytic	0J : 6.3V	1A : 10V	K : ±10%
ECCD	: Ceramic	1C : 16V	1E : 25V	M : ±20%
ECKD	: Ceramic Capacitor	1H : 50V	1V : 35V	Z : $^{+80}_{-20}$ %
ECQM	: Poyester	50 : 50V	05 : 50V	J : ±5%
ECQP	: Polypropylene	2H : 500V	2A : 100V	G : ±2%
ECG	: Ceramic	1 : 100V	1J : 63V	F : ±1%
ECEA N	: Non Polar Electrolytic	KC : 400V AC		C : ±0.25pF
QCU	: Ceramic (Chip Type)	KC : 125V AC (UL)		D : ±0.5pF
ECUX	: Ceramic (Chip Type)			
ECF	: Semiconductor			
EECW	: Liquid electrolyte double layer capacitor			

Ref. No.	Part No.	Value.
RESISTORS(VALUE,WATTAGE)		
R101	ERDS2TJ102	1K 1/4
(EG, EI)		
R102	ERDS2TJ102	1K 1/4
(EG, EI)		
R103	ERDS2TJ102	1K 1/4
(EG, EI)		
R104	ERDS2TJ102	1K 1/4
(EG, EI)		
R105	ERDS2TJ274	270K 1/4
R106	ERDS2TJ274	270K 1/4
R107	ERDS2TJ221	220 1/4
R108	ERDS2TJ221	220 1/4
R109	ERDS2TJ220	22 1/4
R110	ERDS2TJ220	22 1/4
R113	ERDS2TJ563	56K 1/4
R114	ERDS2TJ563	56K 1/4
R117	ERDS2TJ151	150 1/4
R118	ERDS2TJ151	150 1/4
R119	ERDS2TJ100	10 1/4
R120	ERDS2TJ100	10 1/4
R123	ERDS2TJ151	150 1/4
R124	ERDS2TJ151	150 1/4
R125	ERDS2TJ682	6.8K 1/4
R126	ERDS2TJ682	6.8K 1/4
R127	ERDS2TJ823	82K 1/4
R128	ERDS2TJ823	82K 1/4
R129	ERDS2TJ334	330K 1/4
R130	ERDS2TJ334	330K 1/4
R131	ERDS2TJ561	560 1/4
R132	ERDS2TJ561	560 1/4
R201	ERDS2TJ102	1K 1/4
(EG, EI)		
R202	ERDS2TJ102	1K 1/4
(EG, EI)		
R203	ERDS2TJ102	1K 1/4
(EG, EI)		
R204	ERDS2TJ102	1K 1/4
(EG, EI)		
R205	ERDS2TJ102	1K 1/4
(EG, EI)		
R206	ERDS2TJ102	1K 1/4
(EG, EI)		
R207	ERDS2TJ102	1K 1/4
(EG, EI)		
R208	ERDS2TJ102	1K 1/4
(EG, EI)		
R209	ERDS2TJ102	1K 1/4
(EG, EI)		
R210	ERDS2TJ102	1K 1/4
(EG, EI)		
R211	ERDS2TJ473	47K 1/4
R212	ERDS2TJ473	47K 1/4
R213	ERDS2TJ183	18K 1/4
R214	ERDS2TJ183	18K 1/4
R215	ERDS2TJ824	820K 1/4
R216	ERDS2TJ824	820K 1/4
R219	ERD25FJ272	2.7K 1/4
R220	ERD25FJ272	2.7K 1/4
R221	ERDS2TJ471	470 1/4
(EG, EI)		
R222	ERDS2TJ471	470 1/4
(EG, EI)		
R223	ERDS2TJ471	470 1/4
(EG, EI)		
R224	ERDS2TJ471	470 1/4
(EG, EI)		
R301	ERD25FJ561	560 1/4
R302	ERD25FJ561	560 1/4
R303	ERDS2TJ823	82K 1/4
R304	ERDS2TJ823	82K 1/4
R305	ERDS2TJ224	220K 1/4
R306	ERDS2TJ224	220K 1/4
R307	ERDS2TJ392	3.9K 1/4
R308	ERDS2TJ392	3.9K 1/4
R309	ERDS2TJ223	22K 1/4
R310	ERDS2TJ223	22K 1/4
R311	ERDS2TJ102	1K 1/4
R312	ERDS2TJ102	1K 1/4
R313	ERDS2TJ562	5.6K 1/4
R314	ERDS2TJ562	5.6K 1/4
R315	ERD25FJ392	3.9K 1/4
R316	ERD25FJ392	3.9K 1/4
R317	ERD25FJ223	22K 1/4
R318	ERD25FJ223	22K 1/4
R319	ERDS2TJ183	18K 1/4
R320	ERDS2TJ183	18K 1/4
R401	ERDS2TJ122	1.2K 1/4
R402	ERDS2TJ122	1.2K 1/4
R403	ERDS2TJ823	82K 1/4
R404	ERDS2TJ823	82K 1/4
R405	ERD25FJ272	2.7K 1/4
R406	ERD25FJ272	2.7K 1/4
R407	ERD25TJ823	82K 1/4
R408	ERD25TJ823	82K 1/4
R409	ERDS2TJ561	560 1/4
R410	ERDS2TJ561	560 1/4
R411	ERD25FJ470	47 1/4
R412	ERD25FJ470	47 1/4
R415	ERDS2TJ182	1.8K 1/4
R416	ERDS2TJ182	1.8K 1/4
R417	ERDS2TJ391	390 1/4
R418	ERDS2TJ391	390 1/4
R419 ⚠	ERD25FJ101	100 1/4
R420 ⚠	ERD25FJ101	100 1/4
R421	ERDS2TJ223	22K 1/4
R422	ERDS2TJ223	22K 1/4
R423 ⚠	ERD25FJ821	820 1/4
R424 ⚠	ERD25FJ821	820 1/4
R425	ERDS2TJ223	22K 1/4
R426	ERDS2TJ223	22K 1/4
R427 ⚠	ERD25FJ101	100 1/4
R428 ⚠	ERD25FJ101	100 1/4
R429 ⚠	ERD25FJ2R2	2.2 1/4
R430 ⚠	ERD25FJ2R2	2.2 1/4
R431 ⚠	ERD25FJ2R2	2.2 1/4
R432 ⚠	ERD25FJ2R2	2.2 1/4
R433 ⚠	ERD25FJ101	100 1/4
R434 ⚠	ERD25FJ101	100 1/4
R435	ERDS2TJ103	10K 1/4
R436 ⚠	ERD25FJ470	47 1/4
R437	ERDS2TJ473	47K 1/4
R438 ⚠	ERD25FJ6R8	6.8 1/4
R439 ⚠	ERD25FJ6R8	6.8 1/4
R501	ERDS2TJ392	3.9K 1/4
R502	ERDS2TJ392	3.9K 1/4
R503	ERDS2TJ121	120 1/4
R504	ERDS2TJ121	120 1/4

Ref. No.	Part No.	Value.
R505	ERDS2TJ392	3.9K 1/4
R506	ERDS2TJ392	3.9K 1/4
R507	ERDS2TJ121	120 1/4
R508	ERDS2TJ121	120 1/4
R509	ERF2AKR10P	0.1 2
R510	ERF2AKR10P	0.1 2
R511	ERF2AKR10P	0.1 2
R512	ERF2AKR10P	0.1 2
R513 ⚠	ERD25FJ100	10 1/4
R514 ⚠	ERD25FJ100	10 1/4
R515 ⚠	ERD25FJ100	10 1/4
R516 ⚠	ERD25FJ100	10 1/4
R517 ⚠	ERD25FJ1R0	1 1/4
R518 ⚠	ERD25FJ1R0	1 1/4
R519 ⚠	ERD25FJ6R8	6.8 1/4
R520 ⚠	ERD25FJ6R8	6.8 1/4
R521 ⚠	ERDS1FJ100	10 1/2
R522 ⚠	ERDS1FJ100	10 1/2
R523	ERG2SJ331H	330 2
R524	ERG2SJ331H	330 2
R525	ERG2ANJP821S	820 2
R526	ERDS2TJ223	22K 1/4
R527	ERDS2TJ223	22K 1/4
R528	ERDS2TJ824	820K 1/4
R529	ERDS2TJ124	120K 1/4
R531 ⚠	ERDS1FJ100	10 1/2
R532 ⚠	ERDS1FJ100	10 1/2
R601	ERDS2TJ561	560 1/4
R602	ERDS2TJ271	270 1/4
R604	ERDS2TJ331	330 1/4
R605	ERDS2TJ561	560 1/4
R613 ⚠	ERDS1FJ180	18 1/2
R701 ⚠	ERD25FJ151	150 1/4
R702 ⚠	ERD25FJ151	150 1/4
R703 ⚠	ERDS1FJ682	6.8K 1/2
R704 ⚠	ERDS1FJ682	6.8K 1/2
R751	ERDS2TJ223	22K 1/4
R752	ERDS2TJ223	22K 1/4
R753	ERDS2TJ102	1K 1/4
R754	ERDS2TJ153	15K 1/4
R755	ERDS2TJ823	82K 1/4
R756	ERDS2TJ153	15K 1/4
R757	ERDS2TJ102	1K 1/4
R758	ERDS2TJ102	1K 1/4
CAPACITORS(VALUE,VOLTAGE)		
C1 ⚠ (E, EG, EK, EF) (EH, EB, EI) (XL)	ECKWNS103ZVS	0.01
C1 ⚠ (XA)	ECKWNS103ZVS	0.01
C101 (EG, EI)	RCBS1H120JLY	12P 50
C102 (EG, EI)	RCBS1H120JLY	12P 50
C103 (EG, EI)	ECKD1H102KB	0.001 50
C103 (E, EK, EF, EH) (EB, XL, XA)	ECQM1H103JZ	0.01 50
C104 (EG, EI)	ECKD1H102KB	0.001 50
C104 (E, EK, EF, EH) (EB, XL, XA)	ECQM1H103JZ	0.01 50
C105 (E, EK, EF, EH) (EB, XL, XA)	RCBS1H181KBY	180P 50
C105 (EG, EI)	RCBS1H820KBY	82P 50
C106 (E, EK, EF, EH) (EB, XL, XA)	RCBS1H181KBY	180P 50
C106 (EG, EI)	RCBS1H820KBY	82P 50

Ref. No.	Part No.	Value.
C107	ECEA0JU222	2200 6.3
C108	ECEA0JU222	2200 6.3
C111	ECQM1H122JZ	0.0012 50
C112	ECQM1H122JZ	0.0012 50
C113	ECQM1H103JZ	0.01 50
C114	ECQM1H103JZ	0.01 50
C115	ECQV1H393JZ3	0.039 50
C116	ECQV1H393JZ3	0.039 50
C117	ECEA1HKN010B	1 50
C118	ECEA1HKN010B	1 50
C119	ECQM1H472JZ	0.0047 50
C120	ECQM1H472JZ	0.0047 50
C121	ECKD1H103PF	0.01 50
C122	ECKD1H103PF	0.01 50
C123	ECEA1HPS3R3	3.3 50
C124	ECEA1HPS3R3	3.3 50
C125	ECKD1H102KB	0.001 50
(EG, EI)		
C203	RCBC1H101KBY	100P 50
(EG, EI)		
C204	RCBC1H101KBY	100P 50
(EG, EI)		
C205	RCBC1H101KBY	100P 50
(EG, EI)		
C206	RCBC1H101KBY	100P 50
(EG, EI)		
C207	RCBC1H101KBY	100P 50
(EG, EI)		
C208	RCBC1H101KBY	100P 50
(EG, EI)		
C209	RCBC1H101KBY	100P 50
(EG, EI)		
C210	RCBC1H101KBY	100P 50
(EG, EI)		
C211	RCBC1H101KBY	100P 50
(EG, EI)		
C212	RCBC1H101KBY	100P 50
(EG, EI)		
C213	ECQV1H563JZ3	0.056 50
C214	ECQV1H563JZ3	0.056 50
C215	ECQM1H273JZ	0.027 50
C216	ECQM1H273JZ	0.027 50
C221	RCBS1H181KBY	180P 50
(EG, EI)		
C222	RCBS1H181KBY	180P 50
(EG, EI)		
C223	RCBS1H181KBY	180P 50
(EG, EI)		
C224	RCBS1H181KBY	180P 50
(EG, EI)		
C301	ECEA1HPS3R3	3.3 50
C302	ECEA1HPS3R3	3.3 50
C303	RCBC1H101KBY	100P 50
C304	RCBC1H101KBY	100P 50
C305	RCBS1H820KBY	82P 50
C306	RCBS1H820KBY	82P 50
C307	ECEA1VPS4R7	4.7 35
C308	ECEA1VPS4R7	4.7 35
C309	RCBS1H390JLY	39P 50
C310	RCBS1H390JLY	39P 50
C311	ECEA1CPS100	10 16
C312	ECEA1CPS100	10 16
C313	ECQV1H823JZ3	0.082 50
C314	ECQV1H823JZ3	0.082 50
C315	ECQM1H153JZ	0.015 50
C316	ECQM1H153JZ	0.015 50
C317	ECQM1H183JZ	0.018 50
C318	ECQM1H183JZ	0.018 50
C319	ECQM1H182JZ	0.0018 50
C320	ECQM1H182JZ	0.0018 50
C321	ECKD1H103PF	0.01 50
C322	ECKD1H103PF	0.01 50
C401	ECEA1HPS3R3	3.3 50
C402	ECEA1HPS3R3	3.3 50
C403	ECKD1H271KB	270P 50
C404	ECKD1H271KB	270P 50

Ref. No.	Part No.	Value.
C405	ECEA1CPS220	22 16
C406	ECEA1CPS220	22 16
C407	RCBS1H820KBY	82P 50
C408	RCBS1H820KBY	82P 50
C409	ECCD1H100KC	10P 50
C410	ECCD1H100KC	10P 50
C411	ECKD1H681K	680P 50
C412	ECKD1H681K	680P 50
C413	ECCD2H070D	7P 500
C414	ECCD2H070D	7P 500
C415	ECQM1H102JZ	0.001 50
C416	ECQM1H102JZ	0.001 50
C417	ECEA1HK010	1 50
C418	ECEA1HK010	1 50
C419	ECCD2H680K	68P 500
C420	ECCD2H680K	68P 500
C421	ECCD2H680K	68P 500
C422	ECCD2H680K	68P 500
C423	ECKD1H333PF	0.033 50
C424	ECKD1H333PF	0.033 50
C425	ECEA2AU100	10 100
C427	ECKD1H223PF	0.022 50
C429	ECEA1HK010	1 50
C430	ECEA1HK010	1 50
C501	ECEA0JPS101B	100 6.3
C502	ECEA0JPS101B	100 6.3
C503	ECEA0JPS101B	100 6.3
C504	ECEA0JPS101B	100 6.3
C505 (E, EG, EF, EH) (EB, EI, XA)	ECKD1H223PF	0.022 50
C505 (EK, XL)	ECKD1H473ZF	0.047 50
C506 (E, EG, EF, EH) (EB, EI, XA)	ECKD1H223PF	0.022 50
C506 (EK, XL)	ECKD1H473ZF	0.047 50
C507	ECEA0JPS101B	100 6.3
C508	ECEA1HU470	47 50
C509	ECEA1HN100S	10 50
C513 (E, EG, EF, EH) (EB, EI, XA)	ECKD1H223PF	0.022 50
C513 (EK, XL)	ECKD1H473ZF	0.047 50
C514 (E, EG, EF, EH) (EB, EI, XA)	ECKD1H223PF	0.022 50
C514 (EK, XL)	ECKD1H473ZF	0.047 50
C515 (EK, XL)	ECKD1H473ZF	0.047 50
C516 (EK, XL)	ECKD1H473ZF	0.047 50
C517 (EK, XL)	ECKD1H473ZF	0.047 50
C518 (EK, XL)	ECKD1H473ZF	0.047 50
C605	ECEA1CU471	470 16
C705	ECES56V822UM	8200 56
C706	ECES56V822UM	8200 56
C708 ⚠ (E, EK, EF, EH) (EB, XL, XA)	ECKD2H103PE	0.01 500
C708 ⚠ (EG, EI)	ECQE2104KS	0.1 250
C709	ECEA1JPS3R3B	3.3 63
C710	ECEA1JPS3R3B	3.3 63
C751	ECEA1EK100	10 25
C752	ECEA1EK100	10 25
C753	ECEA1EK100	10 25
C754	ECEA1EK3R3B	3.3 25
C755	ECEA1EK3R3B	3.3 25
C756	ECKD1H821KB	820P 50
C757	ECKD1H103PF	0.01 50
C758	ECKD1H103PF	0.01 50

Printed in Japan
F880509200 TM/TW