UNITED TRANSFORMER CORPORATION

150 VARICK STREET, NEW YORK 13, N.Y.

RECOMMENDED VACUUM TUBE AMPLIFIER CIRCUIT PROVIDING 35 WATTS

± 1 db from 15 cycles to 30 KC . . .

At 1 watt, ± 1 db 7 cycles to 100 KC.

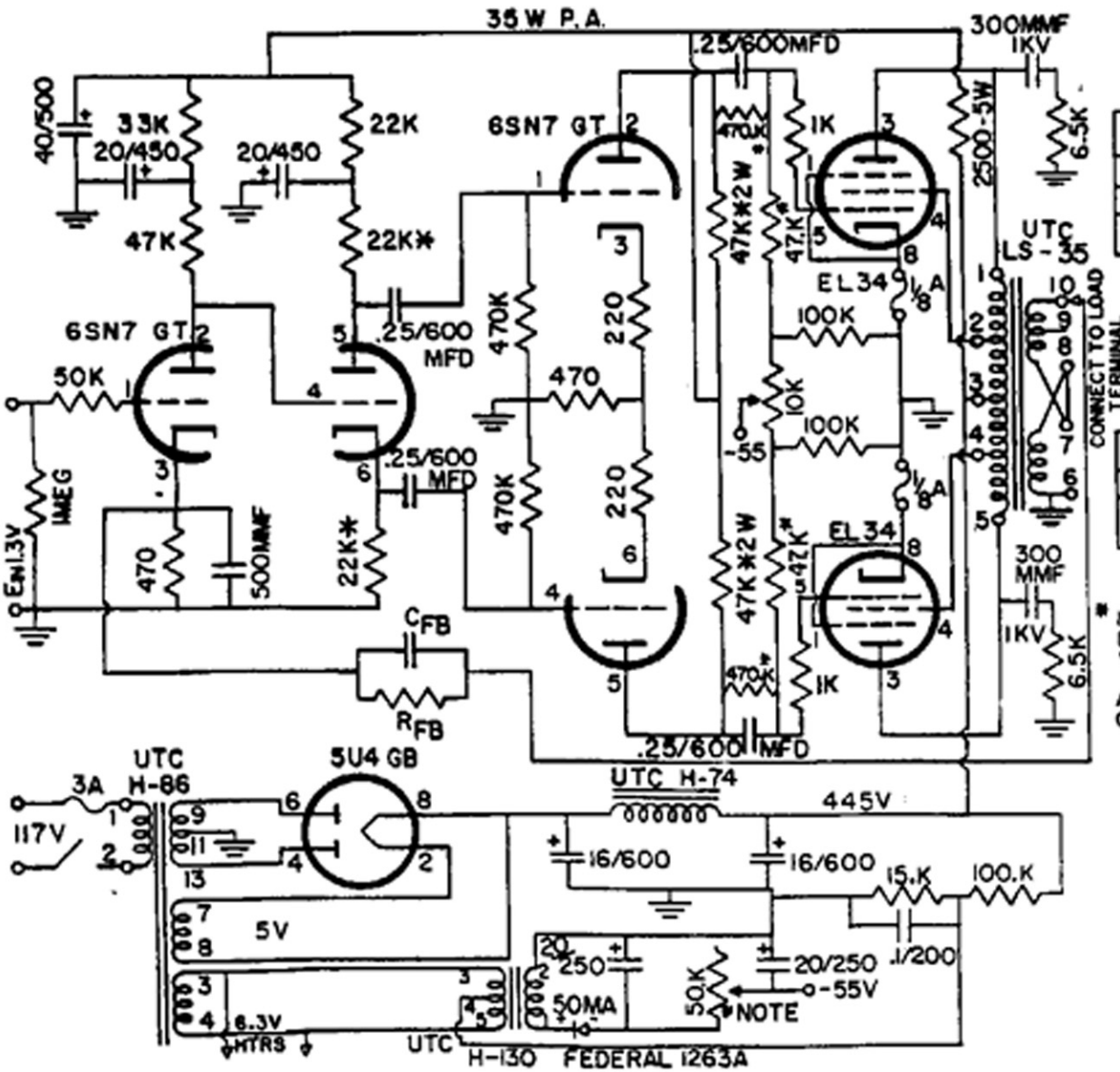

OUT PUT	JOIN	OUTPUT TERMS
16Ω	7-8	6-10
8Ω	7-8	6-9
4Ω	8-10 6-7	6-10

NEGATIVE FEEDBACK

OUT PUT	R_{FB}	C_{FB}
16Ω	9300Ω	140MMF
8Ω	6330Ω	205MMF
4Ω	4230Ω	290MMF

* NOTE - ADJUST EACH EL 34 FOR 55MA WITH "0" SIG. INPUT

ALL RES. 1 WATT UNLESS OTHERWISE SPECIFIED