UHER Service

702/702L

704/704L/742L

eltropa-exklusiv

711 Automatic/711L Automatic

722/723/722L/723L
724 Stereo/724L Stereo

Contents

Page

1. Transport Mechanism 1
2. Clutches 2
3. Brakes 3
4. Tape Transport 3
5. Fast Forward and Rewind 4
6. Speed Selector 4
7. Replacing the Speed Selector Idler 5
8. Replacing the Belt Between the Motor Pulley and the Flywheel 5
9. Automatic End-Of-Tape Stop 5
10. Tape Guides 6
11. Sound Head 6
12. Lubrication and Maintenance 6

Electrical Measurements and Adjustments

Information concerning electrical measurements and adjustments can be found on the back of the circuit diagram sheet pertaining to the tape recorder model in question.

The proper performance of service operations on UHER tape recorders requires the following items in addition to the usual workshop equipment:

vacuum tube voltmeter	UHER alignment tape
audio-frequency oscillator	UHER test tape
oscilloscope	circlip pliers
wow and flutter meter	spring balance, range 1,000 g
demagnetizer	spring balance, range 50 g

1. Transport Mechanism

1.1 Driving System of Models 702, 704 and 711 Automatic (see Fig. 1)

The flywheel (D), whose shaft simultaneously serves as the capstan (E), is driven by the motor pulley (A) of the split-pole motor (B) via the driving belt (C). The magnetic tape is driven by being pinched between the pressure roller (F) and the rotating capstan (E). The power which is required for tape winding is transmitted from the motor pulley (A) to the right-hand clutch disk (M) via the belt (G), the left-hand friction wheel (H), the right-hand friction wheel (I), the belt (K) and the driving wheel (L).

During rewind operation, the left-hand clutch disk (N) is driven by the left-hand friction wheel (H), which in turn is driven by the motor pulley (A) by means of the belt (G).

During fast forward operation the right-hand clutch disk (M) is driven by the friction wheel (H) via the friction wheel (I).

The rotating right-hand turntable drives the footage counter (P) by means of the driving belt (O). (The Model 702 does not comprise a counter mechanism.)

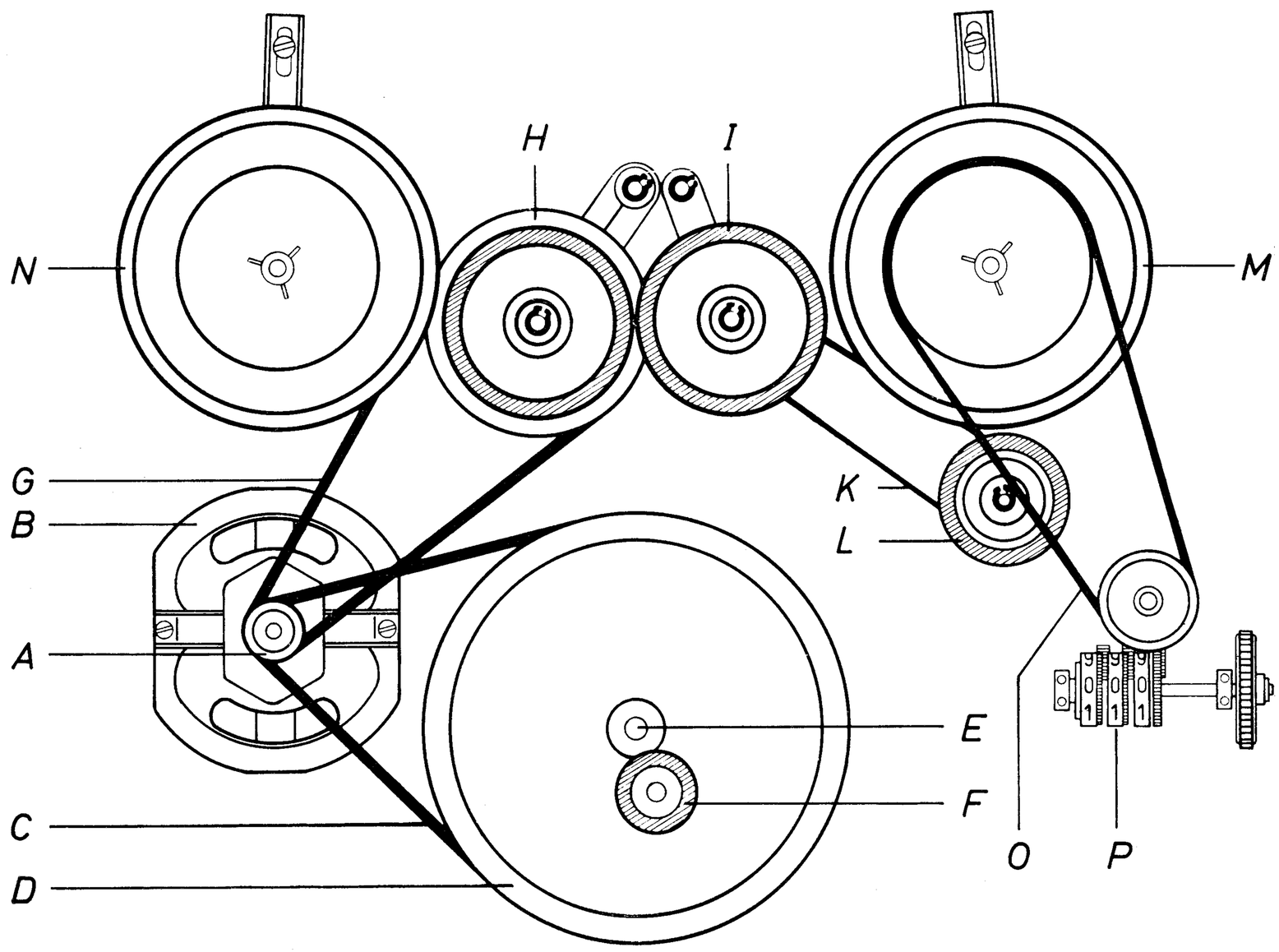

Fig. 1

1.2 Driving System of Models 722 and 723 (see Fig. 2)

The stepped motor pulley (A) of the split-pole motor (B) drives the flywheel (D) and with it the capstan (E) by means of the speed selector idler (Q).

The desired tape speed is selected by bringing the speed selector idler (Q) into engagement with the pertaining step of the motor pulley (A). The speed selector mechanism automatically actuates the equalizer switch for proper equalization. The clutches are driven in the manner described above for the Models 702, 704 and 711 Automatic.

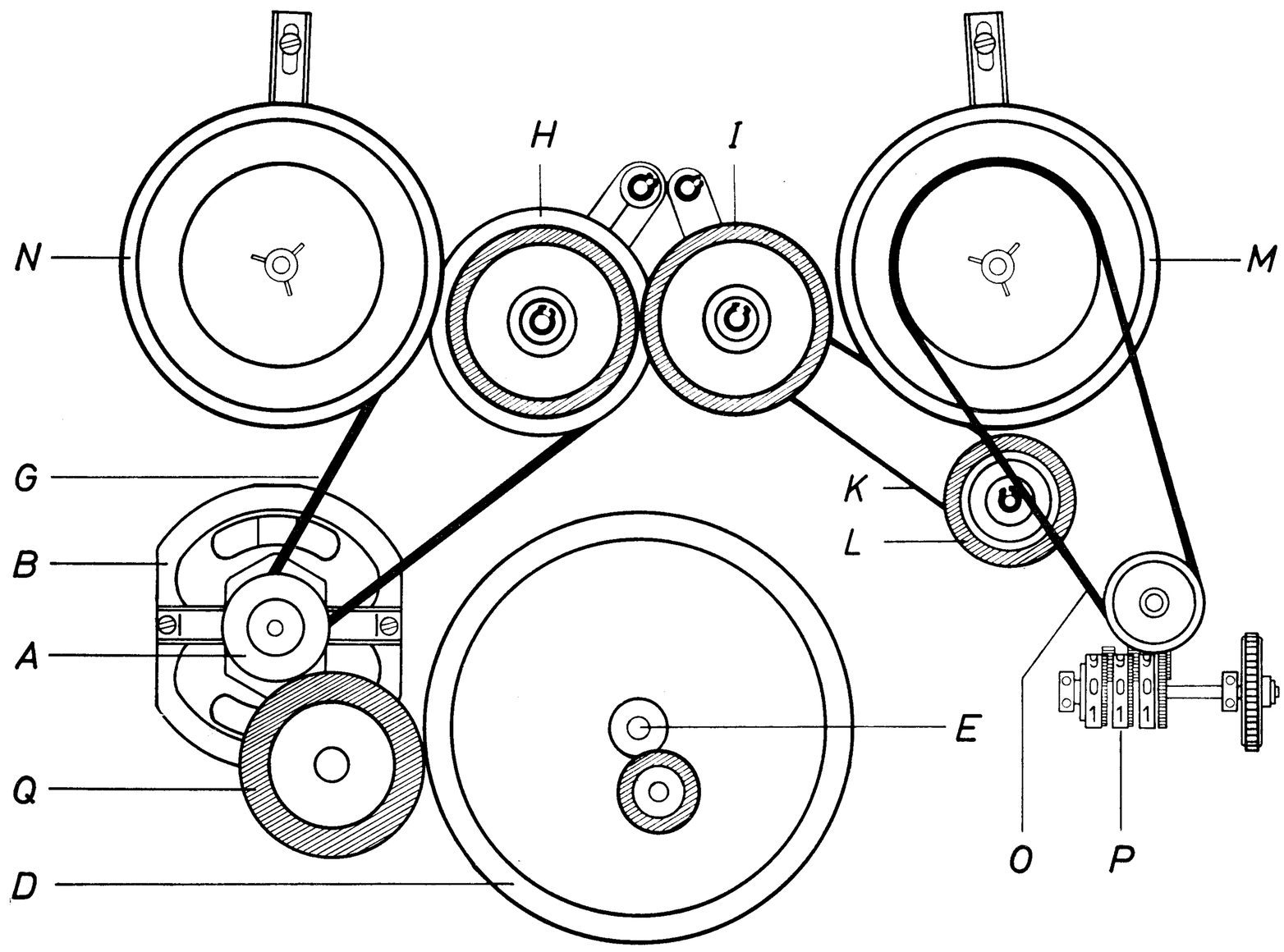

Fig. 2

2. Clutches (see Fig. 3)

The design of the left-hand and right-hand clutches is demonstrated in Fig. 3.

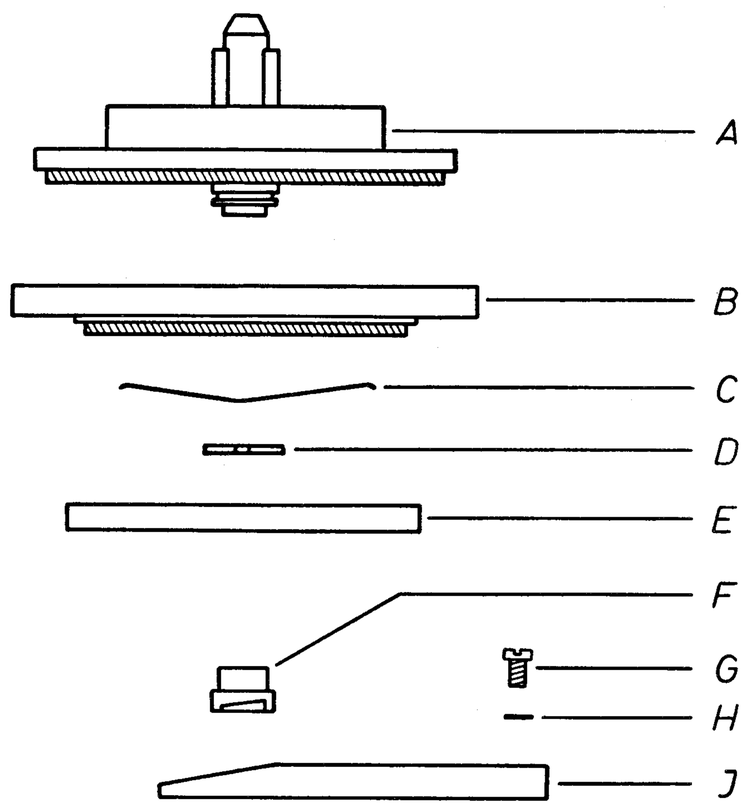

Fig. 3

A — turntable
B — clutch disk
C — flat spring
D — circlip
E — braking disk
F — plastic insert
G — retaining screw
H — washer
I — adjusting wedge

2.1 Checking the Clutches (see Fig. 4)

Switch off the recorder and return all control keys to their respective rest positions. Place on the turntable of the clutch to be checked a reel which holds approx. 20" of tape (core diameter of the reel: 60 millimeters or approx. 2.4") according to Fig. 4. Hook a spring balance to the looped free end of the tape and pull the balance away from the reel.

Desired value: 350—400 grams (approx. 12.5—14.5 oz.)

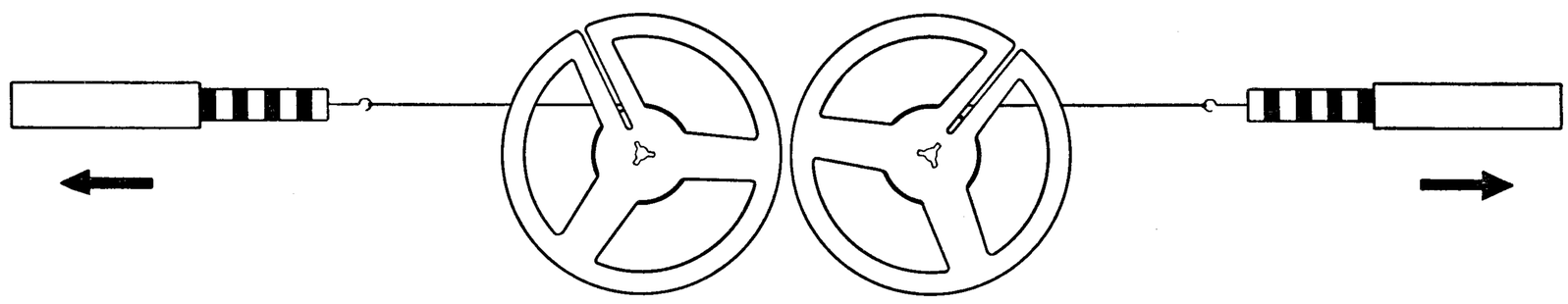

Fig. 4

If this value cannot be attained, check whether the brakes in question are properly adjusted according to paragraph 3.1. If necessary readjust the flat spring of the clutch by bending.

The braking disks will operate without requiring any maintenance. They need not be checked or adjusted. It will suffice to check the brakes according to paragraph 3.2.

2.2 Vertical Adjustment of the Clutches (see Fig. 6)

After the screw (G) has been slackened, the vertical position of the clutch in question can be adjusted by sliding the corresponding adjusting wedge (H). Proper adjustment is achieved when the tape runs symmetrically between the two flanges of the corresponding reel.

2.3 Checking and Adjusting the Driving Wheel Clutch (see Figs. 5 and 6)

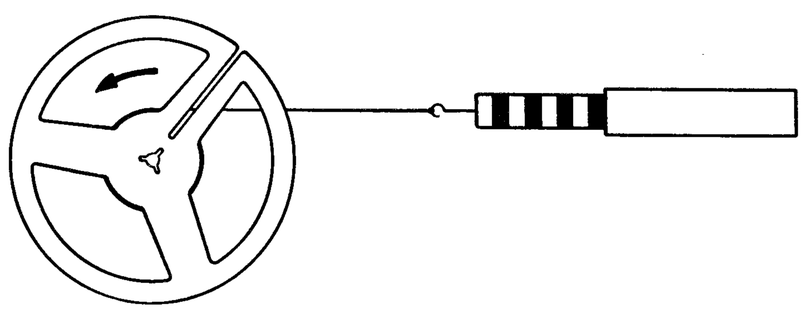

Fig. 5

Switch on the recorder, depress the start key and measure the pull of the clutch according to Fig. 5.

Desired value: 80 ± 10 grams (approx. 3—3.5 oz.)

If the desired value cannot be attained, first check the pressure between the driving wheel and the clutch disk according to Fig. 6.

Desired value 200—230 grams (approx. 7—8 oz.)

The adjustment of the desired value is made in the following manner: slacken the screw (A). Then slide the angular member (B) so that, when the start key is depressed, the right-hand clutch starts to rotate before the pressure roller reaches the capstan in order to drive the tape. When the start key is in its rest position, the driving wheel (C) must not be in contact with the clutch (D).

Thereafter measure the desired value (200—230 grams) and, if necessary, readjust by bending the flange (E). If by now the proper pull of the clutch (80 ± 10 grams) still cannot be attained, stretch the spring (F) for increased pressure.

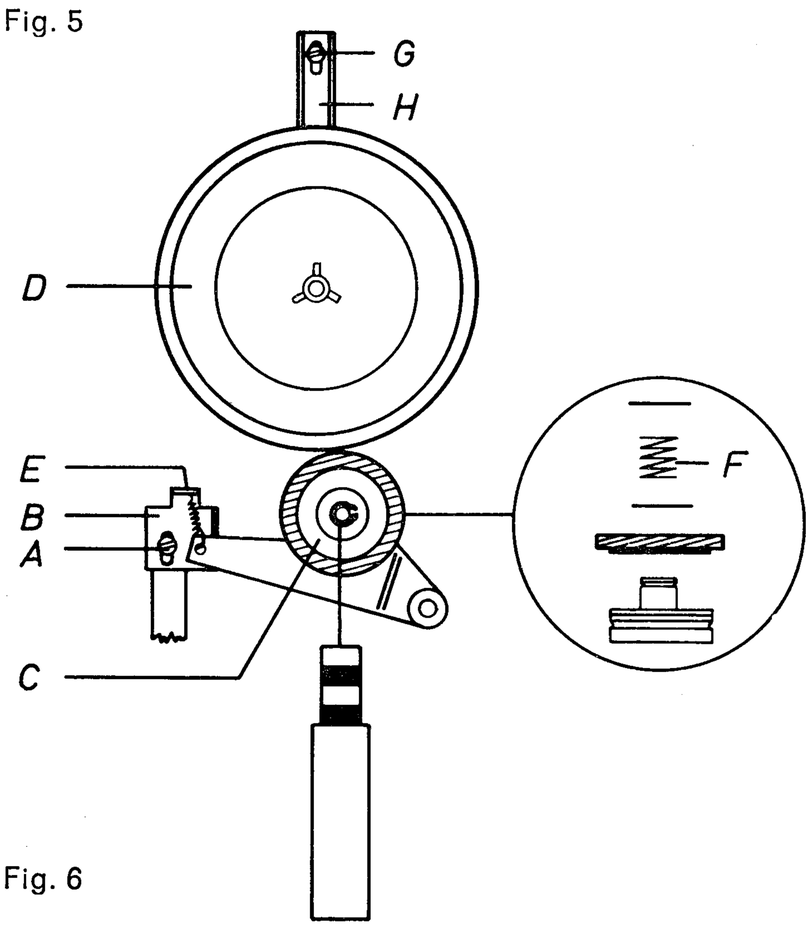

Fig. 6

3. Brakes

Brakes acting on different parts of the clutch have different functions and must therefore be checked and adjusted individually.

3.1 Checking and Adjusting the Clutch Brakes (see Fig. 7)

The clutch brakes work against the clutch disks which form a unit with their respective turntables and flat springs.

Left-hand brake:
Depress the start key and the pause control key. Now the brake (A) must be applied. Release the pause control key. Thereby the brake must be lifted. If necessary, the clearance can be adjusted by bending the flap (B).

Right-hand brake:
Depress the start key; the brake (C) must be lifted. Depress the stop key. The brake (C) must be applied. When the start key is depressed or the recorder is set for fast forward or rewind operation, the left-hand and right-hand brakes must be lifted.

3.2 Checking and Adjusting the Brakes of the Braking Disks (see Fig. 7)

The brakes which engage the braking disks influence the tension of the tape and are controlled through the fast forward/rewind sliding key.

Left-hand brake:
Set the recorder for rewind. The brake (D) must be lifted from the left-hand braking disk (E). Depress the stop key. The brake (D) must lock the braking disk (E).

Right-hand brake:
Set the recorder for fast forward operation. The brake (F) must be lifted from the right-hand braking disk (G). Depress the stop key. The brake (F) must lock the braking disk (G).
The clearance between the brake lining and the braking disk can be adjusted after the nuts (H) and (I) have been slackened.

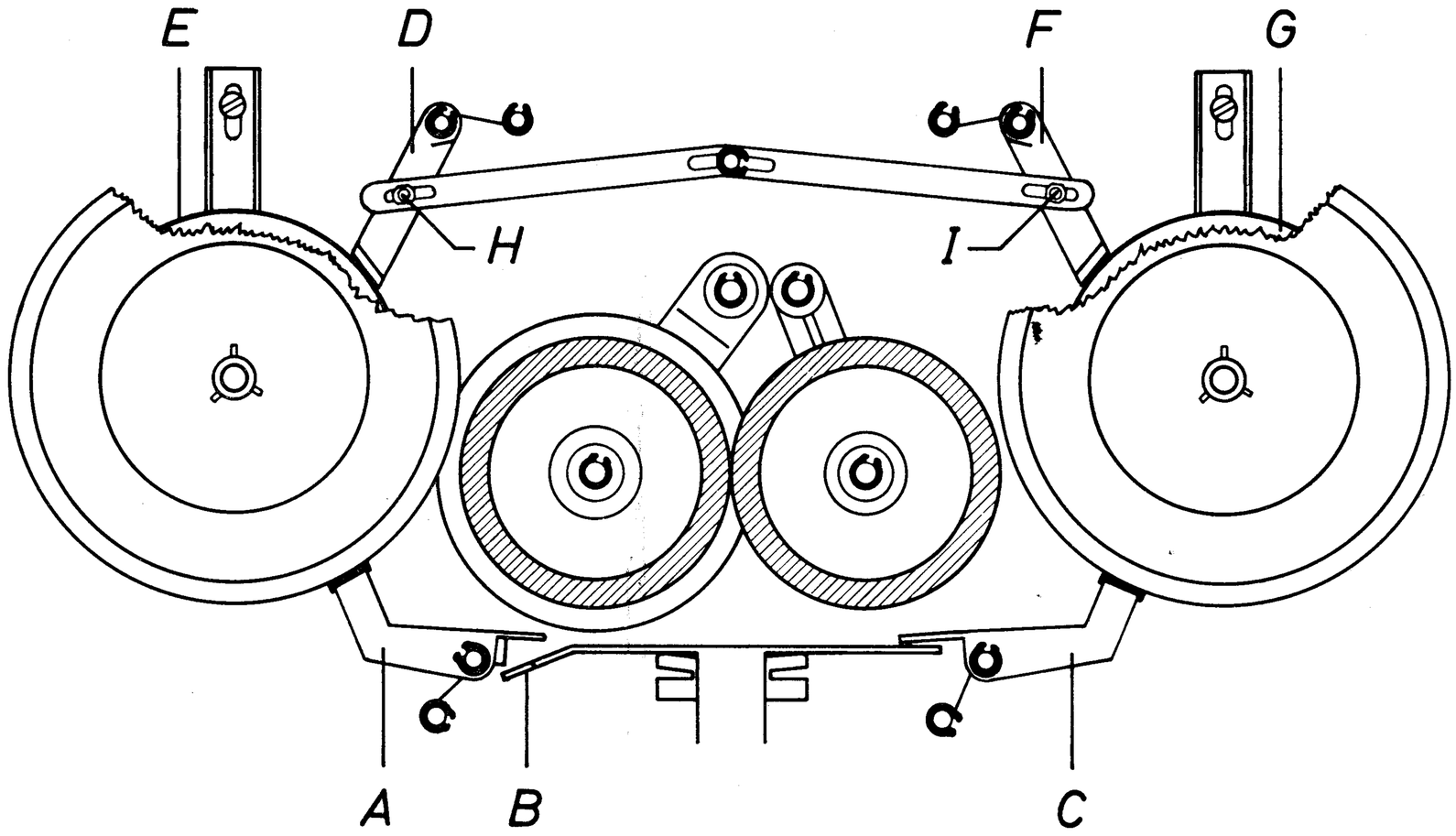

Fig. 7

4. Tape Transport

4.1 Measuring the Winding Tension (see Fig. 8)

Prior to the checks described below, all parts which participate in the functioning of the tape transport must be cleaned with gasoline (petrol) for cleaning purposes.
Place a reel which holds a short length of tape on the right-hand turntable and insert the tape into the tape guides. Hook a spring balance to the free end of the tape and hold the balance in place.

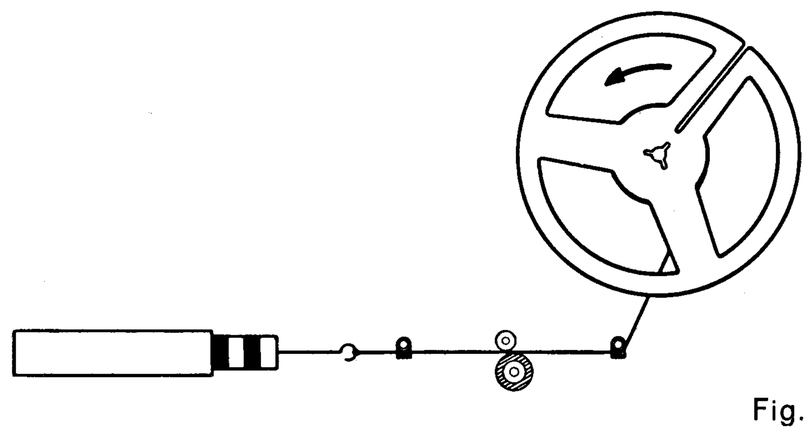

Fig. 8

The spring balance must not be pulled off. Depress the start key and read the winding tension on the balance.

Desired value: 350—400 grams (approx. 12.5—14 oz.)

4.2 Adjusting the Pressure Between the Pressure Roller and the Capstan (see Fig. 9)

Do not disturb the adjustment made at the factory unless the desired value of the winding tension according to paragraph 4.1 cannot be attained.

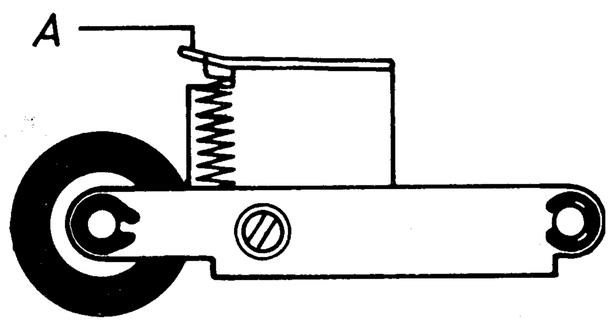

Fig. 9

If all parts which influence the winding tension operate properly, a winding tension which is too weak can only be due to improper pressure between the pressure roller and the capstan. In this case readjust by bending the flap (A).

While making this adjustment measure the winding tension and adjust the pressure between the pressure roller and the capstan in such a way that the desired value for the winding tension is attained.

5. Fast Forward and Rewind (see Fig. 10)

First check the clutches according to paragraph 2.1. Then check the rubber treads of the friction wheels for cleanliness and absence of wear. When the fast forward/rewind key is in its rest position, the friction wheels (B) and in (C) must be at equal distances from the corresponding clutch disks. If necessary readjust by sliding the bridge (A) which becomes accessible after removal of the friction wheel (B).

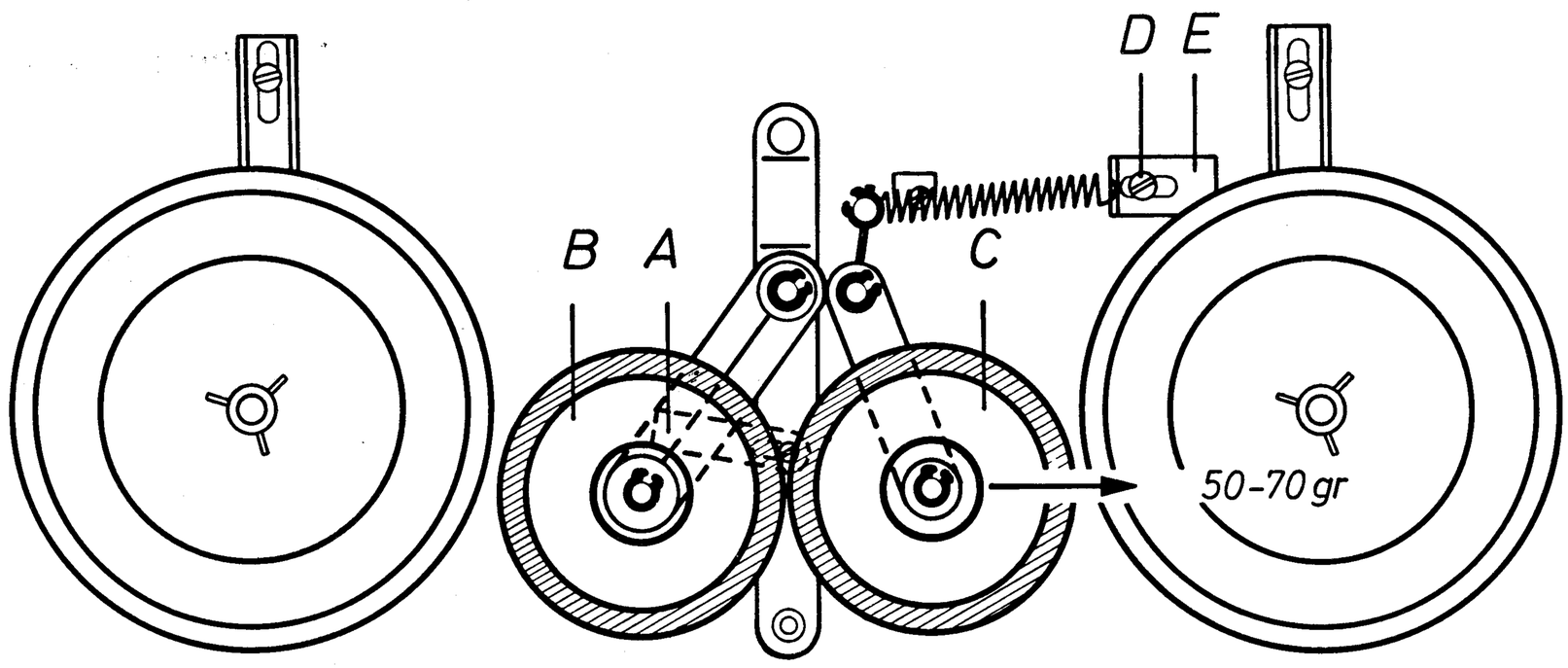

Fig. 10

The pressure between the right-hand friction wheel (C) and the left-hand friction wheel (B) must be 60 ± 10 grams (approx. 2.5—3 oz.). This value can be adjusted by sliding the bracket (E) after the screw (D) has been slackened.

6. Speed Selector (Models 722 and 723)

Check for absolute cleanliness of the treads of the motor pulley, the speed selector idler and the flywheel. Clean the treads whenever the recorder is serviced or repaired.

6.1 Check

The belt grooves of the motor pulley and the friction wheel must be at equal height.

Take care that when the idler is in its highest operating position, it runs freely and without grazing.

When the idler engages the lowest step of the motor pulley, there must be a clearance of 1—1.5 millimeters or approx. 0.04—0.06" (see Fig. 11) between the lower edge of the idler and the lower edge of the flywheel tread.

6.2 Adjustment (see Fig. 11)

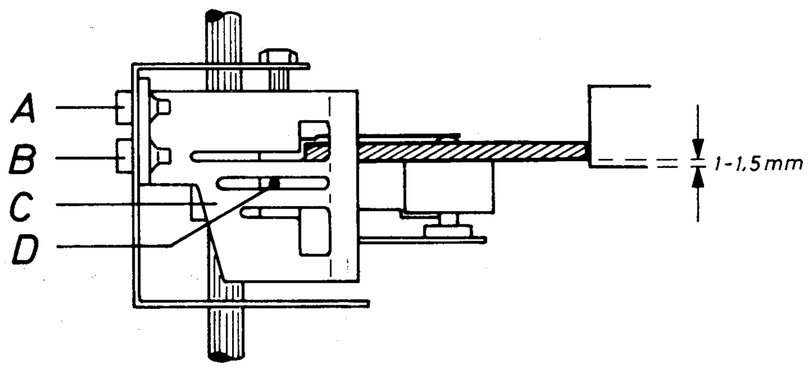

Fig. 11

The position of the idler is adjusted by slackening the screws (A) and (B) and sliding the gate (C). When the recorder is shifted from one tape speed to another, the guide pin (D) must not touch the gate. When the recorder is switched on or off, it must not graze in the slots of the gate.

7. Replacing the Speed Selector Idler of Models 722 and 723 (see Fig. 12)

If the recorder is left for a long time switched on but disconnected from the mains, the rubber tread of the idler may become dented. Such an idler will cause noise and will impair the speed stability. Normally such dents will disappear after approximately one to two hours of operation. Therefore, the idler must not be replaced immediately.

However, if the dents do not disappear, the idler must be replaced. For this purpose proceed in the following manner:

Set the speed selector at its "Off" position, swing aside the flat spring (E) in the direction of the arrow and pull the idler upwards off its shaft. Install the new idler in reverse order.

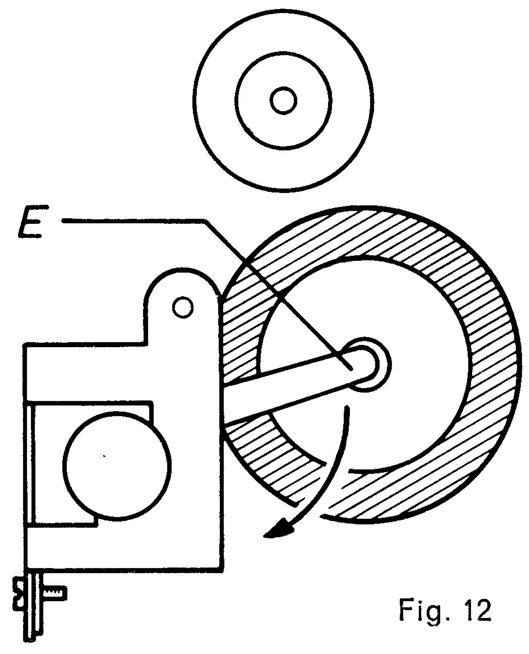

Fig. 12

8. Replacing the Belt Between the Motor Pulley and the Flywheel of Models 702, 704 and 711 Automatic (see Fig. 13)

It will very seldom be necessary to replace this belt. If necessary proceed in the following manner:

Remove the retaining screws (A), (B), (C) and (D).

Remove the belt (E) from the groove of the motor pulley (F).

Lift the upper mounting plate (G) and the flywheel (H) slightly and swing them to the right until the belt can be pulled out from underneath the flywheel.

Install the new belt in reverse order. Take care not to install it in a twisted position.

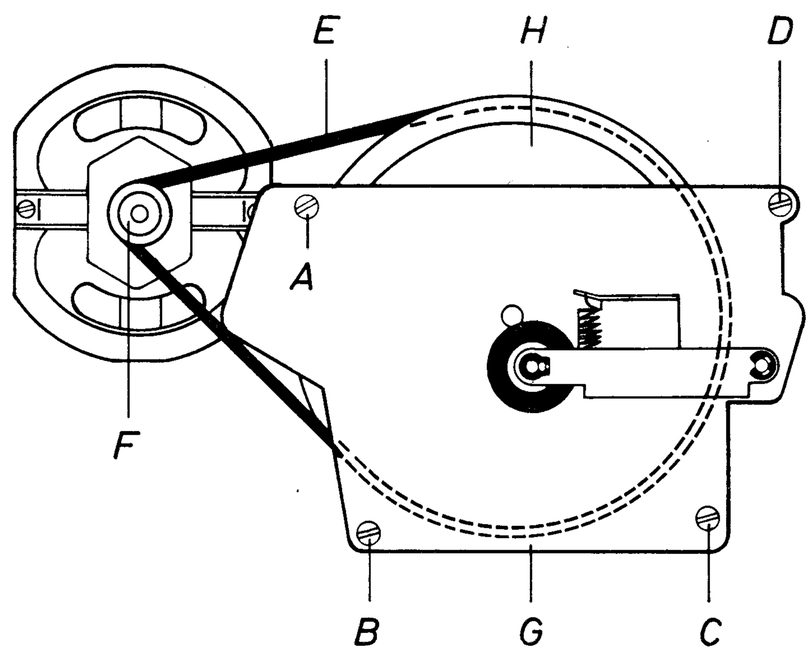

Fig. 13

9. Automatic End-Of-Tape Stop (does not apply to Models 702 and 704)

The automatic end-of-tape stop will not function unless tapes are used whose ends are fitted with a metallic strip each which bridges the contacts of the right-hand tape guide.

9.1 Check

The automatic end-of-tape stop must operate during the functions "Start", "Fast Forward" and "Rewind" of the recorder.

9.2 Adjustment (see Fig. 14)

Adjustment of the automatic end-of-tape stop mechanism is effected by bending the driver (A).

When the start key is in its operating position or the fast forward/rewind key is in either one of its two operating positions, there must be a clearance of 0.7 ± 0.3 millimeters or approx. 0.03 ± 0.01" between the actuating lug (B) of the armature (C) and the driver (A) (see the encircled part of Fig. 14) If this requirement is not met, the automatic end-of-tape stop will fail and the control keys will not be arrested in their respective operating positions.

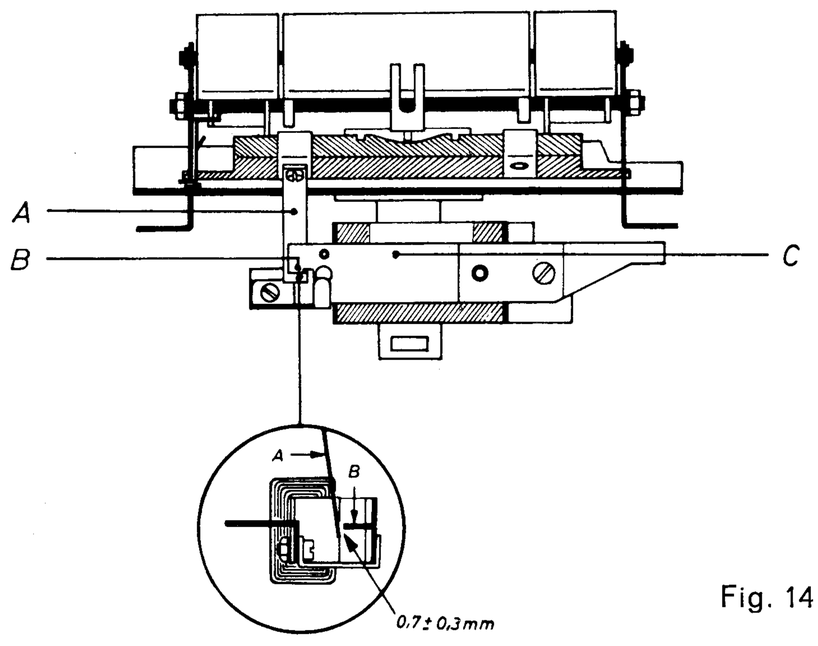

Fig. 14

10. Tape Guides (see Fig. 15)

The right-hand tape guide stud (A) and the erase head mount (B) are aligned to such fine tolerances that realignment of these parts will not be necessary.
In the four-track model 704 the tape guide stud (C) must be adjusted so that the upper edge of the erase head gap is flush with the upper edge of the tape. In the two-track models 702, 722, 723 and 711 Automatic the gap of the erase head must surmount the upper edge of the tape by 0.4 millimeters or approx. 0.016".
The inner tape guide (see Fig. 16) can be adjusted by turning the set screw (A). If necessary it should be adjusted so that the moving tape does not touch the limiting stops of the inner tape guide.

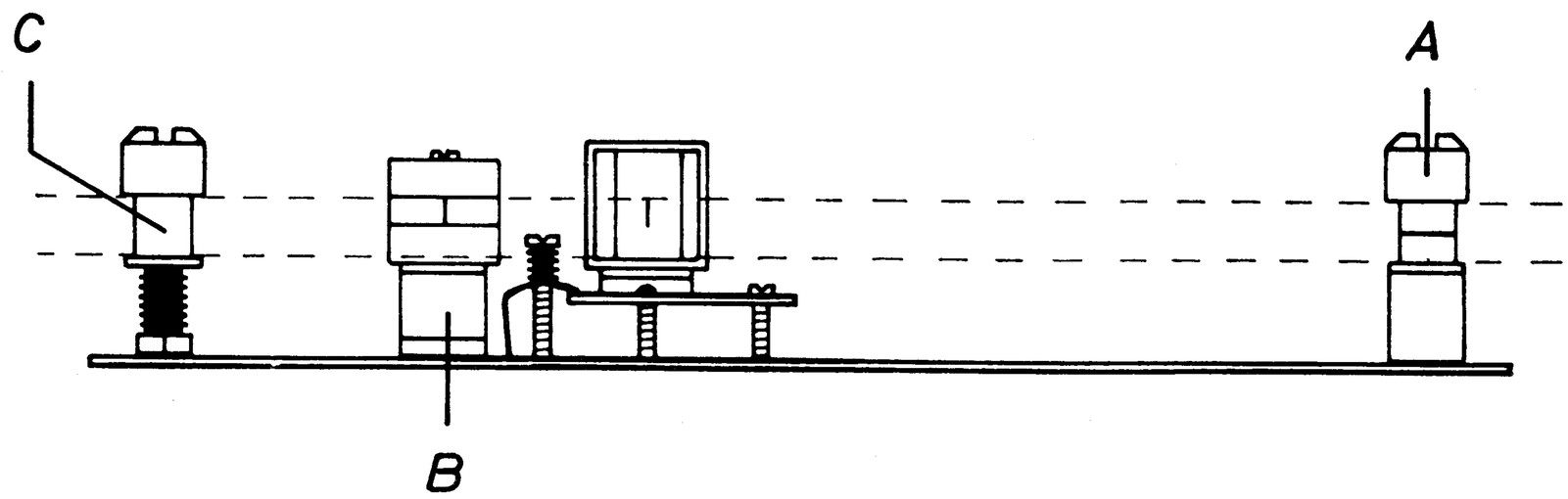

Fig. 15

11. Sound Head (see Fig. 16)

According to the recorder model in question, the sound head must be aligned by means of the UHER two-track or the UHER four-track alignment tape. In two-track recorder models the gap of the sound head must surmount the upper edge of the magnetic tape by 0.3 millimeters (approx. 0.012"). In four-track recorders the gap of the sound head must be flush with the upper edge of the tape. We recommend to comply with the order of operations given below:

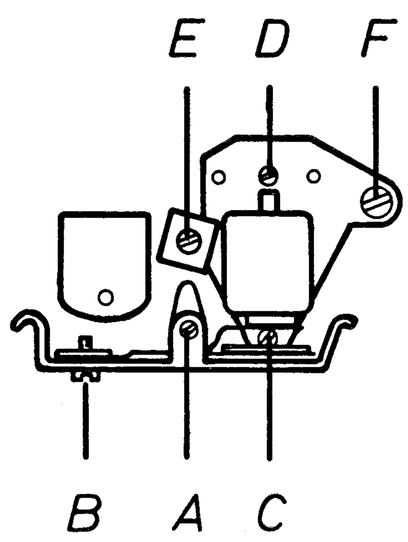

Fig. 16

1. Connect an audio-frequency millivoltmeter across the contacts 3 and 2 of the "Radio/Phono" socket.
2. Thread the UHER alignment tape. Wind and rewind the whole length of the tape in fast forward and rewind operation.
3. Align the sound head by turning the grub screws (D) and (C) for proper vertical position. Tilting of the sound head toward or away from the tape can be avoided by turning both grub screws simultaneously and by the same amount.
4. Set the recorder for playback and turn the screw (F) for maximum output level of the test signal. Take care that the pressure spring which is located underneath the screw (E) remains prestressed during the whole aligning process.

12. Lubrication and Maintenance

12.1 Lubrication

All important rotating parts of the transport mechanism are equipped with oil-retaining sintered-metal bearings. Therefore, under normal operating conditions, they do not need any lubricating for years. The bearings will not accept any kind of normal lubricating oil. If necessary they must be lubricated with a special oil for sintered-metal bearings, such as for example:

BP Energol CS 300 BV Aral HKB Calipsol WIK Castrol Alfa 417 Esso Teresso 100

All sliding and metal-to-metal friction surfaces must be greased with a non-resinifying multi-purpose grease (as used for automobiles) at intervals of approximately 500 working hours. Be sure to avoid application of excess lubricant, as this could soil the friction linings and driving belts, thereby causing serious trouble.

12.2 Maintenance

Absolute cleanliness of the sound head faces and tape guides is of the utmost importance. Remove the sound head cover which is located above the presure roller and clean the tape guides, the capstan, the pressure roller and the sound head faces thoroughly of any adhering tape coating particles and dust. A small wooden stick covered with a piece of fabric soaked with alcohol is well suited for this purpose. Whenever the recorder is serviced or repaired clean the rubber belts and the treads of all rotating parts which are driven by friction by means of a piece of fabric soaked with alcohol. Check all contacts for cleanliness and clean them if necessary.

Die unterschiedlichen Entzerrerbauteile sind aus den jeweiligen Schaltbildern zu ersehen.

UHER

702/704/711
722/723

Ansicht der Leiterseite
Printed Side

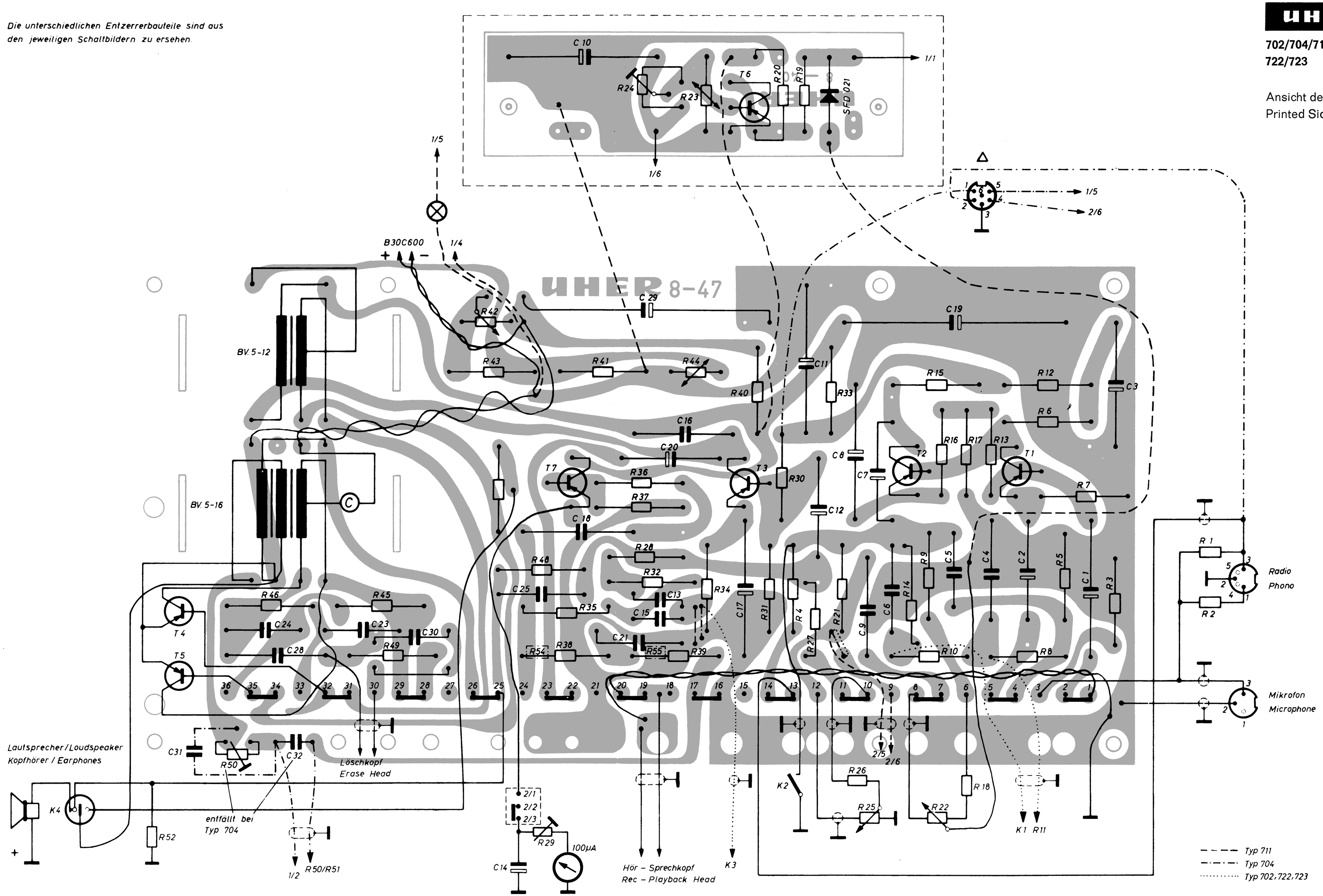

R	52 50 46 45,49 42,43,53 48 29 35 38 54 41 24,37,32 36 28 39 55 44 23 34 40 31 20 30 4 19,27 33,21 26,25 14 9 10 15 16 22 17 18 13 8 12 6 5 7 3 1 2	R
C	31 24 28 32 23 30 14 25 10 18 21,29 13 15 20 16 17 11 12 8 9 7 6 19 5 4 2 1 3	C
Kontakte Contacts	K4 36 35 34 33 32 31 30 29 28 27 26 25 24 23 22 21 20 19 18 17 16 15 14 13,K2,12 11 10 9 8 7 6 5 4 3 2 1	Kontakte Contacts

UHER

702/704/711
722/723

Ansicht der Bestückungsseite
Components Side

Die unterschiedlichen Entzerrerbauteile sind aus den jeweiligen Schaltbildern zu ersehen.

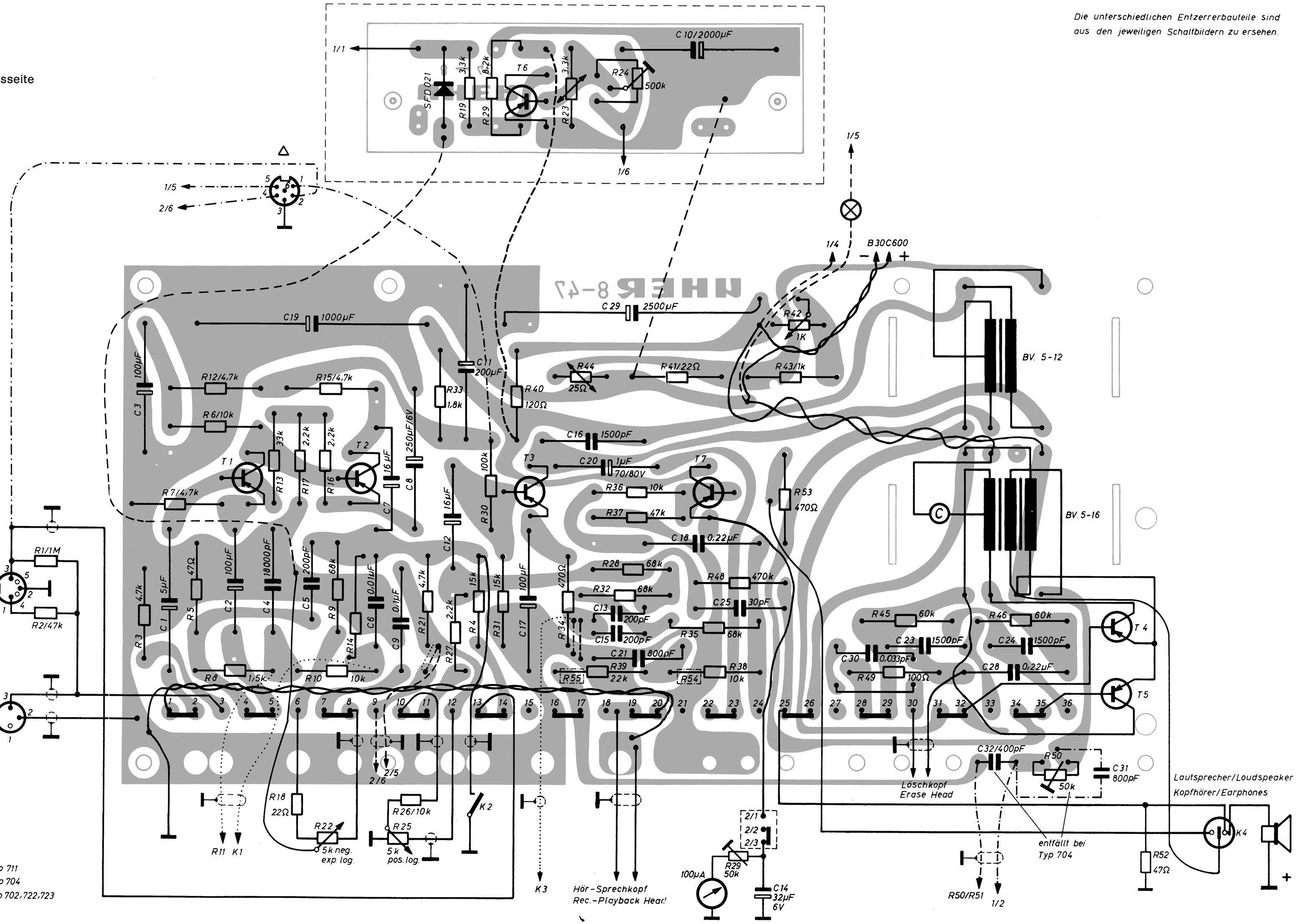

R	1 2 3 7 5 12 9 8 13 17 18 16 15,9 22,10 14 25,26,21,33,27,19, 4 20 30 31 40 23 44 55,39, 32 36 37,24 28 41 35 48 54,38, 29 53,43,42 49 45 46 50 52	R
C	3 1 2 4 19 5 6 7 9 8 12,11 17 16 20 13 15 29,21 10 18 25 14 30 23 32 28,24 31	C
Kontakte Contacts	1 2 3 4 5 6 7 8 9 10 11 12 K2 13 14 15 16 17 18 19 20 21 22 23 24 25 26 27 28 29 30 31 32 33 34 35 36 K 4	Kontakte Contacts

Aufnahme / Wiedergabe
Alle Spannungen mit Röhrenvoltmeter (Ri ≅ 10MΩ) gemessen. Gezeichnete Stellung „Wiedergabe."

Recording / Playback
Voltage measurments taken with VTVM (impedance 10meg). Switches shown in "Playback" position.

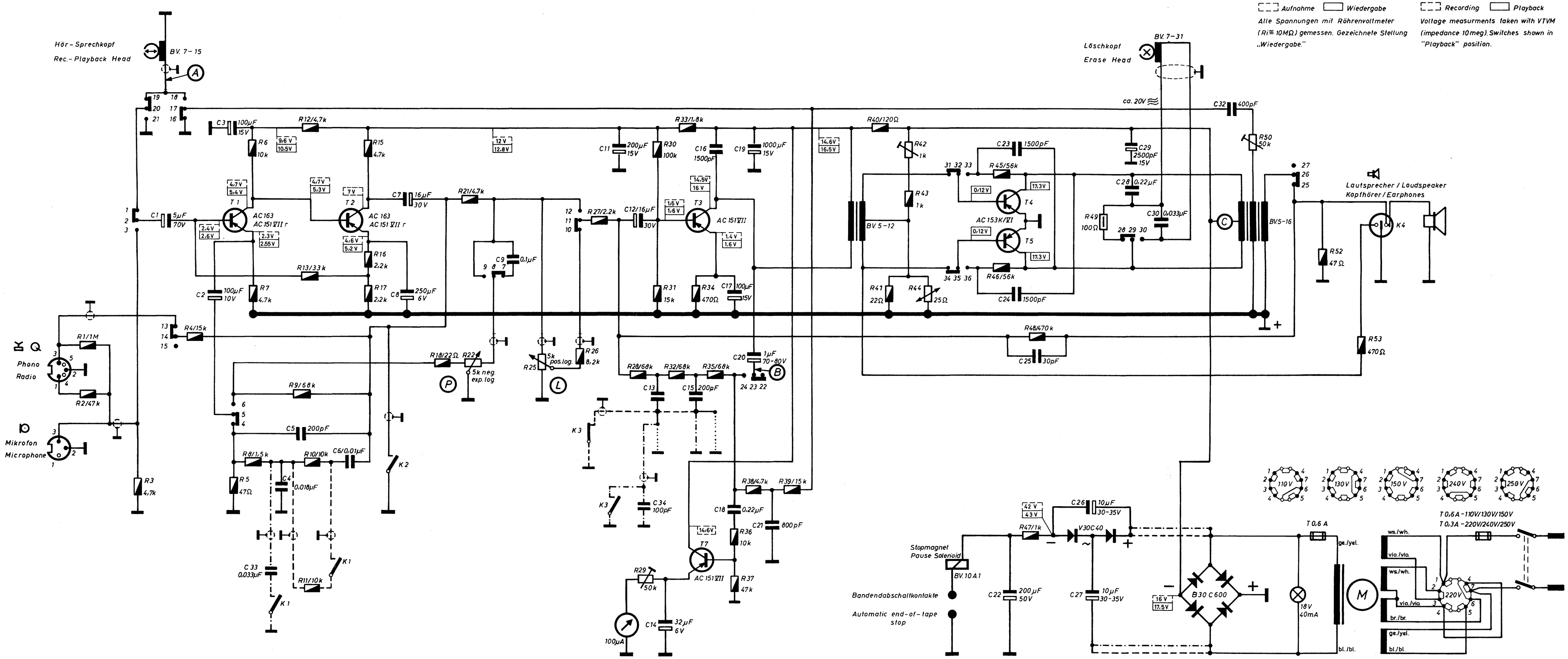

R	1 2	3	4	5	6 7 8	9,10,12 13 11	15 16 17	18 19	20 21 22	23	24 25	26	27	28 29 30 31	32,33,34	35	36 37	38	39	40,41	42 43	44	45 46	47,48	49	50	52	53	R
C		1		2	3	33	4	5	6	7 8	9	10	11	12,34	13,14	15	16	17 18	19 20 21				22 23 24	25	26 27	29 28	29,30	32	C
Kontakte/Contacts		19,20,21 1,2,3	16,17,18 13,14,15	4,5,6		K1		K2		7,8,9		10,11,12		K3				22,23,24				31,32,33 34,35,36			28,29,30		25,26,27	K4	Kontakte/Contacts

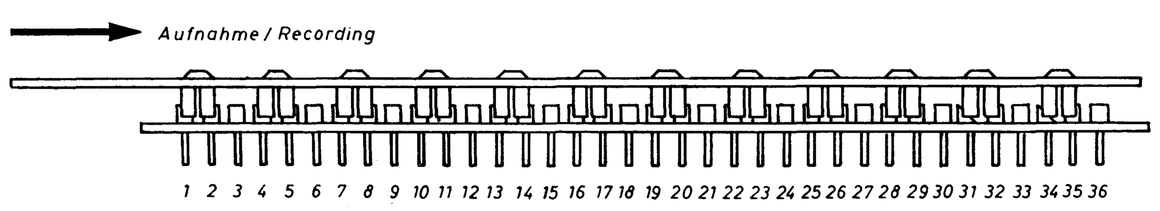

Stellung der Kontakte K1 und K3					geschlossen	offen
Position of the contacts K1 and K3					closed	open
Typ 702	·····	C 13	200pF		—	—
Typ 722	— — —	C 13	200pF	bei 9,5 cm/s at 3 3/4 ips.	K 3	K 1
				bei 19 cm/s at 7 1/2 ips.	K 1	K 3
Typ 723	—·—·—	C 13	1000pF	bei 4,7cm/s at 1 7/8 ips.	K 1/K 3	
				bei 9,5cm/s at 3 3/4 ips.		K1/K 3

(P) Pegelregler, Tonblende/Level, Tone Control
(L) Lautstärke/Volume Control
1/2 W
1/2 W
Elko
Kondensator
Transistor
B E C

UHER

TYP 702, TYP 722, TYP 723

Stromlaufplan

Gültig ab Gerät Nr.: 215001
Änderungen vorbehalten!

Circuit Diagram

Valid from ser. no.: 215001
Alterations reserved!

Technische Daten:
Technical Specifications:

Spurlage:	International. Vierspur
Recording Sense:	Four tracks to international standard
Bandgeschwindigkeit:	9,53 cm/s
Tape Speeds:	3 3/4 ips.
Max. Spulengröße:	18 cm
Reel Size:	7 in.
Frequenzumfang:	40—14 000 Hz (DIN 45 511)
Frequency Response:	40—14,000 cps. (according to German Standard DIN 45 511)
Dynamik:	45 db (DIN 45 405)
Dynamic Range:	45 db (according to German Standard DIN 45 405)
Gleichlaufabweichung:	± 0,2 %
Wow and Flutter:	± 0,2 %
Eingänge:	Mikrofon: 0,3 mV/ 4,7 kOhm Radio: 3,5 mV/ 50 kOhm Phono: 65 mV/ 1 MOhm
Inputs:	Microphone: 0.3 mV/ 4.7 kiloohms Radio: 3.5 mV/ 50 kiloohms Phono: 65 mV/ 1 megohm
Ausgänge:	2,85 V/4 Ohm; 0,4—0,5 V/15 kOhm
Outputs:	2.85 v/4 ohms 0,4—0,5 V/15 kiloohms
Netzanschluß:	50 Hz (auf 60 Hz umstellbar) 110, 130, 150, 220, 240, 250 V
Mains:	50 cps. (adaptable to 60 cps.) 110, 130, 150, 220, 240, 250 V
Leistungsaufnahme:	ca. 25 W
Power consumption:	approx. 25 watts

Caracteristiques techniques:
Caracteristicas:

Système de pistes:	4 pistes, normes internationales
Sistema de registro:	norma international, cuatro pistas
Vitesse de défilement:	9,53 cm/sec.
Velocidad de la cinta:	9,53 cm/seg.
Diamètre maximum des bobines:	18 cm
Diámetro máximo de las bobinas:	18 cm
Gamme de fréquences:	40 à 14.000 Hz (DIN 45 511)
Gama de frecuencias:	40—14.000 c/s. (DIN 45 511)
Dynamique:	45 db (DIN 45 405)
Gama dinámica:	45 db (DIN 45 405)
Pleurage:	± 0,2 %
Asincronismo:	± 0,2 %
Entrées:	microphone: 0,3 mV/ 4,7 kohms radio: 3,5 mV/ 50 kohms tourne-disques: 65 mV/ 1 Mohm
Entradas:	Micrófono: 0,3 mV/ 4,7 k/ohmios Radio: 3,5 mV/ 50 k/ohmios Fonocaptor: 65 mV/ 1 M/ohmios
Sorties:	2,85 V/4 ohms; 0,4—0,5 V/15 kohms
Salidas:	2,85 V/4 ohmios; 0,4—0,5 V/15 k/ohmios
Alimentation sur le secteur:	110, 130, 150, 220, 240, 250 V 50 Hz (adaptable sur 60 Hz)
Conexión a la red:	110, 130, 150, 220, 240, 250 V 50 c/s. (adaptable a 60 c/s.)
Consommation:	25 W env.
Consumo:	approx. 25 W

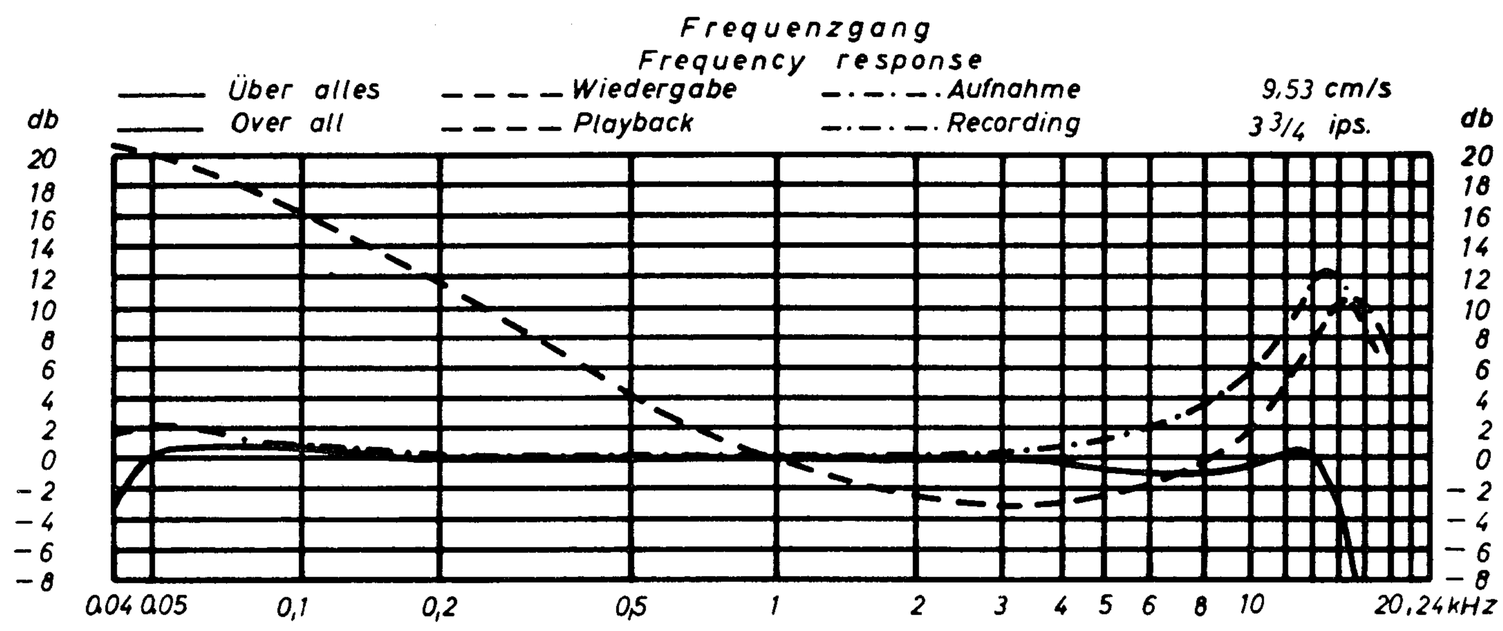

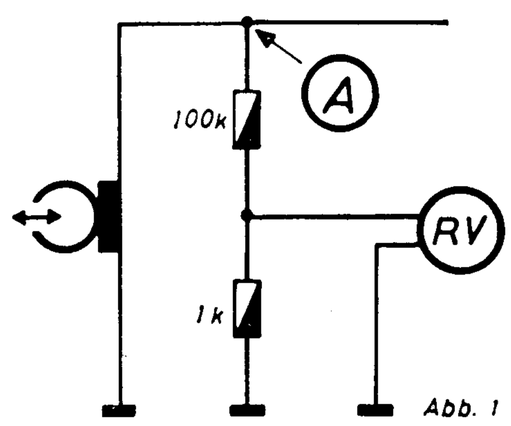

Abb. 1

Fig 1

Reglereinstellung

R 29 Aussteuerungsanzeige (R 29 befindet sich neben dem Tonkopf): Tongenerator an die Kontakte 1 und 2 der Buchse ⅄ Ω anschließen und ca. 10 mV/1000 Hz einspeisen.

Am Meßpunkt B (siehe Schaltbild) NF-Röhrenvoltmeter anschließen. Tasten „Aufnahme" und „Start" drücken. Automatik ausschalten. Regler „Pegel" so einstellen, daß das Röhrenvoltmeter eine Niederfrequenzspannung von 4 V anzeigt.

R 29 ist dann so abzugleichen, daß der Zeiger des Aussteuerungsinstruments genau vor Eintritt in das rote Feld stehen bleibt.

R 50 — R 51 HF-Vormagnetisierung: Die HF-Vormagnetisierung beeinflußt den Frequenzgang des Gerätes. Die unten angegebene Spannung ist ein Mittelwert, die endgültige Einstellung erfolgt nach der Kontrolle des Frequenzganges. NF-Röhrenvoltmeter im Punkt A gemäß Abb. 1 über einen Spannungsteiler (100 kΩ + 1 kΩ) anschließen. Tasten „Aufnahme" und „Start" drücken.

Spurwahltaste 1 — 4 drücken; mit R 51 wird am Röhrenvoltmeter eine Spannung von 350 mV eingestellt.
Spurwahltaste 2 — 3 drücken; mit R 50 wird am Röhrenvoltmeter eine Spannung von 350 mV eingestellt.

R 42 Arbeitspunkt der Gegentaktendstufe: Milliamperemeter (Meßbereich 15 mA, Ri = 20 Ohm) im Punkt C (siehe Schaltbild) anschließen. Taste „Start" drücken, Regler „Pegel" auf 0 stellen. Mit R 42 einen Strom von 7,0 mA einstellen.

Abschwenken des Verstärkers (siehe Abb. 2), Bodenplatte abschrauben, Schraube E entfernen, Stift F ausrasten, Verstärker abschwenken.

Umstellen auf 60-Hz-Betrieb: Zur Umstellung auf 60 Hz bzw. 50 Hz ist die Motorrolle auszuwechseln.

Adjustment of Variable Resistors

R 29 Recording Level Indicator (R 29 located next to recording head): Connect a—f oscillator across contacts 1 and 2 of socket ⅄ Ω and apply a signal of 1000 cps. at approx. 10 millivolts. Connect a—f VTVM to measuring terminal B (see circuit diagram). Press RECORD and START keys. Switch off ALC. Adjust the control LEVEL so that a—f VTVM reads 4 volts. Now readjust R 29 until the pointer of the VU meter stops exactly before entering the red band of the scale.

R 50 — R 51 R-F Bias: The frequency response of the recorder depends on the r-f bias. The voltage level stated below is an average value only; check frequency response before making final adjustment of bias. Connect a—f VTVM to terminal A by way of a voltage divider (100 kiloohms + 1 kiloohm) as indicated in Fig. 1. Press RECORD and START keys.

Depress the track selector key 1 — 4; adjust R 51 until VTVM reads 350 millivolts.
Depress the track selector key 2 — 3; adjust R 50 until VTVM reads 350 millivolts.

R 42 Push-Pull Output Stage: Connect milliamperemeter (measuring range 15 milliamperes, internal resistance 20 ohms) to terminal C (see circuit diagram). Press START key and adjust rheostat LEVEL to zero. Adjust R 42 so that a current of 7 milliamperes flows.

To swing out amplifier (see Fig. 2): screw off bottom plate and remove screw E; disengage stud F; swing out amplifier.

Adaptation to 60-cps. mains: To adapt to a 60-cps. or 50-cps. mains, change motor pulley.

Ajustage des résistances réglables

R 29 Modulomètre (la résistance R 29 se trouve à côté de la tête magnétique): Raccorder un générateur BF aux bornes 1 et 2 de la prise ⅄ Ω et injector un signal d'environ 1000 Hz et 10 mV. Brancher un voltmètre électronique BF sur la prise de mesure B (voir schéma de circuit). Enfoncer les touches «Enregistrement» et «Start». Déconnector le réglage automatique du niveau d'enregistrement. Ajuster le régleur «Niveau» de telle façon que le voltmètre électronique indique une tension BF de 4 V.

Ajuster la résistance R 29 de manière que l'aiguille du modulomètre s'immobilise exactement à la limite de la plage rouge.

R 50 — R 51 Prémagnétisation HF: La prémagnétisation HF exerce une influence sur la réponse en fréquence du magnétophone. La tension mentionnée ci-dessous représente une valeur moyenne. Le réglage définitif s'opère après le contrôle de la réponse en fréquence. Brancher un voltmètre électronique BF sur la prise de mesure A (selon Fig. 1), par l'intermédiaire d'un diviseur de tension (100 kΩ + 1 kΩ). Enfoncer les touches «Enregistrement» et «Start».

Appuyez sur le sélecteur de pistes 1 — 4; à l'aide de la résistance R 51, ajustez une tension de 350 mV sur le voltmètre électronique.
Appuyez sur le sélecteur de pistes 2 — 3; à l'aide de la résistance R 50, ajustez une tension de 350 mV sur le voltmètre électronique.

R 42 Point de fonctionnement de l'étage en push-pull: Raccorder un milliampèremètre (plage de mesure 15 mA; impédance 20 ohms) sur la prise de mesure C (voir schéma de circuit). Enfoncer la touche «Start» et amener le régleur «Niveau» dans sa position zéro. A l'aide de la résistance R 42, ajuster un courant de 7,0 mA.

Renversement de l'amplificateur (voir Fig. 2): Pour renverser l'amplificateur, dévisser la plaque de fond, retirer la vis E et dégager la cheville F.

Adaptation sur une fréquence du secteur de 60 Hz: L'adaptation du magnétophone sur une fréquence du secteur de 60 Hz ou de 50 Hz requiert l'échange de la poulie du moteur.

Ajuste del regulador

R 29 Indicador de modulación (R 29 se encuentra el lado de la cabeza grabadora): Conectar el generador de audio a los contactos 1 y 2 del jack ⅄ Ω y aplicar una señal de 10 mV/1000 c/s.

Conectar en el punto de medición B (véase esquema) el voltímetro a válvula de baja frecuencia. Oprimir las teclas «registro» y «marcha». Desconectar el sistema automático. Ajustar el regulador de nivel de registro de tal modo que el voltímetro indique una tensión audiofrecuente de 4 V.

R 29 debe entonces compensarse de tal manera que la aguja del instrumento medidor de modulación se pare exactamente antes de entrar en el campo rojo.

R 50 — R 51 Premagnetización de alta frecuencia: La premagnetización de alta frecuencia influye en la respuesta de frecuencia del aparato. La tensión abajo indicada es un valor medio, ya que el ajuste definitivo se realiza después de comprobar la respuesta de frecuencia. Conectar el voltímetro a válvula de baja frecuencia en el punto A (véase fig. 1) a través de un divisor de tensión (100 kΩ + 1 kΩ). Oprimir las teclas «registro» y «marcha».

Apretar la tecla selectora de pistas 1 — 4; con R 51 se ajusta una tensión de 350 mV en el voltímetro. Apretar la tecla selectora de pistas 2 — 3; con R 50 se ajusta una tensión de 350 mV en el voltímetro.

R 42 Punto de funcionamiento de la etapa final en push-pull: Conectar el miliamperímetro (margen de medición 15 mA, resistencia interna = 20 ohmios) en el punto C (véase esquema). Oprimir la tecla «marcha», situar el regulador de nivel en 0. Ajustar con R 42 una corriente de 7,0 mA.

Apartar el amplificador (véase fig. 2), destornillar la placa de base, quitar el tornillo E, desenganchar el perno F, apartar el amplificador.

Adaptación a corriente de 60 c/s: Para adaptar el aparato a corriente de 60 c/s o de 50 cs respectivamente, hay que cambiar la polea del motor.

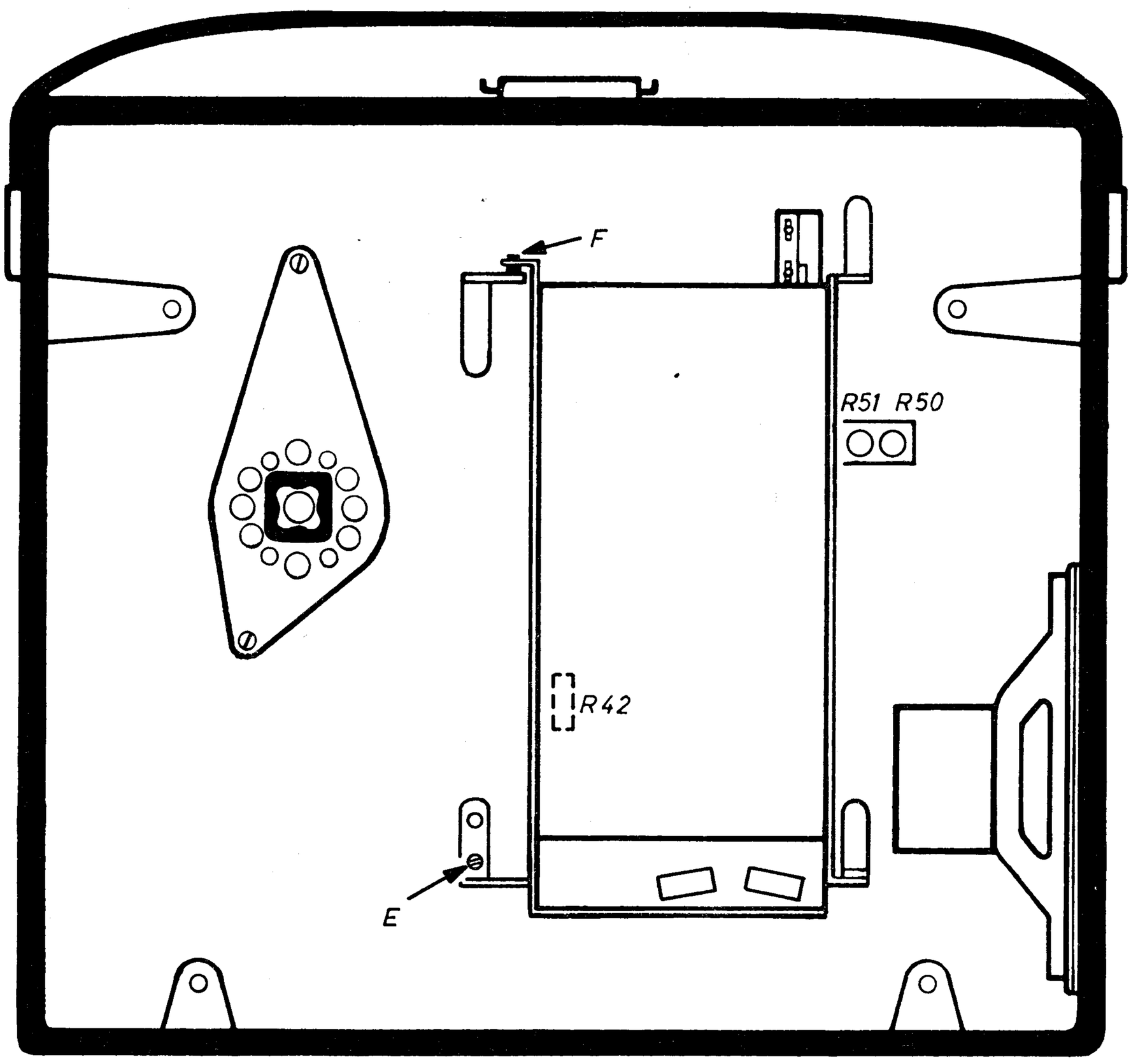

Abb. 2
Fig. 2

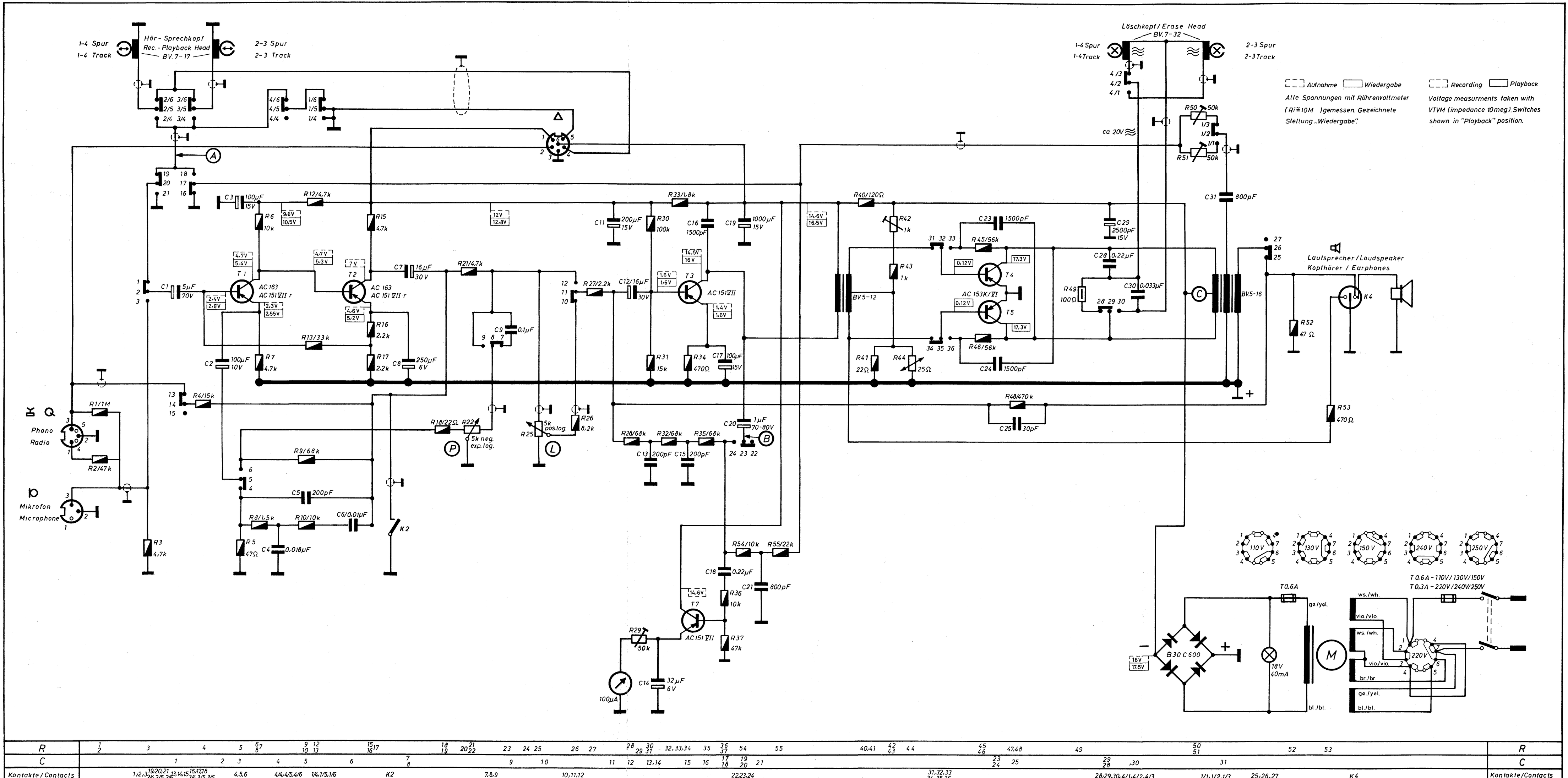
1-4 Spur
1-4 Track
Hör-Sprechkopf
Rec.-Playback Head
BV. 7-17
2-3 Spur
2-3 Track
Löschkopf / Erase Head
BV. 7-32
Aufnahme
Wiedergabe
Alle Spannungen mit Röhrenvoltmeter (Ri ≅ 10M) gemessen. Gezeichnete Stellung „Wiedergabe".
Recording
Playback
Voltage measurments taken with VTVM (impedance 10meg). Switches shown in "Playback" position.
Lautsprecher / Loudspeaker
Kopfhörer / Earphones
Phono
Radio
Mikrofon
Microphone
AC 163
AC 151 VII r
AC 151 VII
AC 153K/VI
BV5-12
BV5-16
B30 C600
T 0,6A
T 0,6A - 110V / 130V / 150V
T 0,3A - 220V / 240V / 250V
18V
40mA
100µA
Pegelregler, Tonblende / Level, Tone Control
Lautstärke / Volume Control
Transistor
Elko
Kondensator
Aufnahme / Recording
Beispiel: Kontakt 4/3
Example: Contact 4/3
UHER
TYP 704
Stromlaufplan
Circuit Diagram
Gültig ab Gerät Nr.: 215001
Valid from ser. no.: 215001
Änderungen vorbehalten!
Alterations reserved!

Technische Daten:
Technical Specifications:

Spurlage:	International. Zweispur
Recording Sense:	Two tracks to international standard
Bandgeschwindigkeit:	9,53 cm/s
Tape Speeds:	3 3/4 ips.
Max. Spulengröße:	18 cm
Reel Size:	7 in.
Frequenzumfang:	40—14 000 Hz (DIN 45 511)
Frequency Response:	40—14,000 cps. (according to German Standard DIN 45 511)
Dynamik:	45 db (DIN 45 405)
Dynamic Range:	45 db (according to German Standard DIN 45 405)
Gleichlaufabweichung:	± 0,2 %
Wow and Flutter:	± 0.2 %
Eingänge:	Mikrofon: 0,3 mV/ 4,7 kOhm Radio: 3,5 mV/ 50 kOhm Phono: 65 mV/ 1 MOhm
Inputs:	Microphone: 0.3 mV/ 4.7 kiloohms Radio: 3.5 mV/ 50 kiloohms Phono: 65 mV/ 1 megohm
Ausgänge:	2,85 V/4 Ohm; 0,6—0,7 V/15 kOhm
Outputs:	2.85 v/4 ohms; 0.6—0.7 v/15 kiloohms
Netzanschluß:	50 Hz (auf 60 Hz umstellbar) 110, 130, 150, 220, 240, 250 V
Mains:	50 cps. (adaptable to 60 cps.) 110, 130, 150, 220, 240, 250 v
Leistungsaufnahme:	ca. 25 W
Power consumption:	approx. 25 watts

Caractéristiques techniques:
Caracteristicas:

Système de pistes:	2 pistes, normes internationales
Sistema de registro:	norma internacional, dos pistas
Vitesse de défilement:	9,53 cm/s
Velocidad de la cinta:	9,53 cm/seg.
Diamètre maximum des bobines:	18 cm
Diámetro máximo de las bobinas:	18 cm
Gamme de fréquences:	40 à 14.000 Hz (DIN 45 511)
Gama de frecuencias:	40—14.000 c/s. (DIN 45 511)
Dynamique:	45 db (DIN 45 405)
Gama dinámica:	45 db (DIN 45 405)
Pleurage:	± 0,2 %
Asincronismo:	± 0,2 %
Entrées:	Microphone: 0.3 mV/ 4.7 kiloohms radio: 3,5 mV/ 50 kohms tourne-disques: 65 mV/ 1 Mohm
Entradas:	Micrófono: 0,3 mV/ 4,7 k/ohmios Radio: 3,5 mV/ 50 k/ohmios Fonocaptor: 65 mV/ 1 M/ohmios
Sorties:	2,85 V/4 ohms; 0,6—0,7 V/15 kohms
Salidas:	2,85 V/4 ohmios; 0,6—0,7 V/15 k/ohmios
Alimentation sur le secteur:	110, 130, 150, 220, 240, 250 V 50 Hz (adaptable sur 60 Hz)
Conexión a la red:	110, 130, 150, 220, 240, 250 V 50 c/s. (adaptable a 60 c/s.)
Consommation:	25 W env.
Consumo:	approx. 25 W

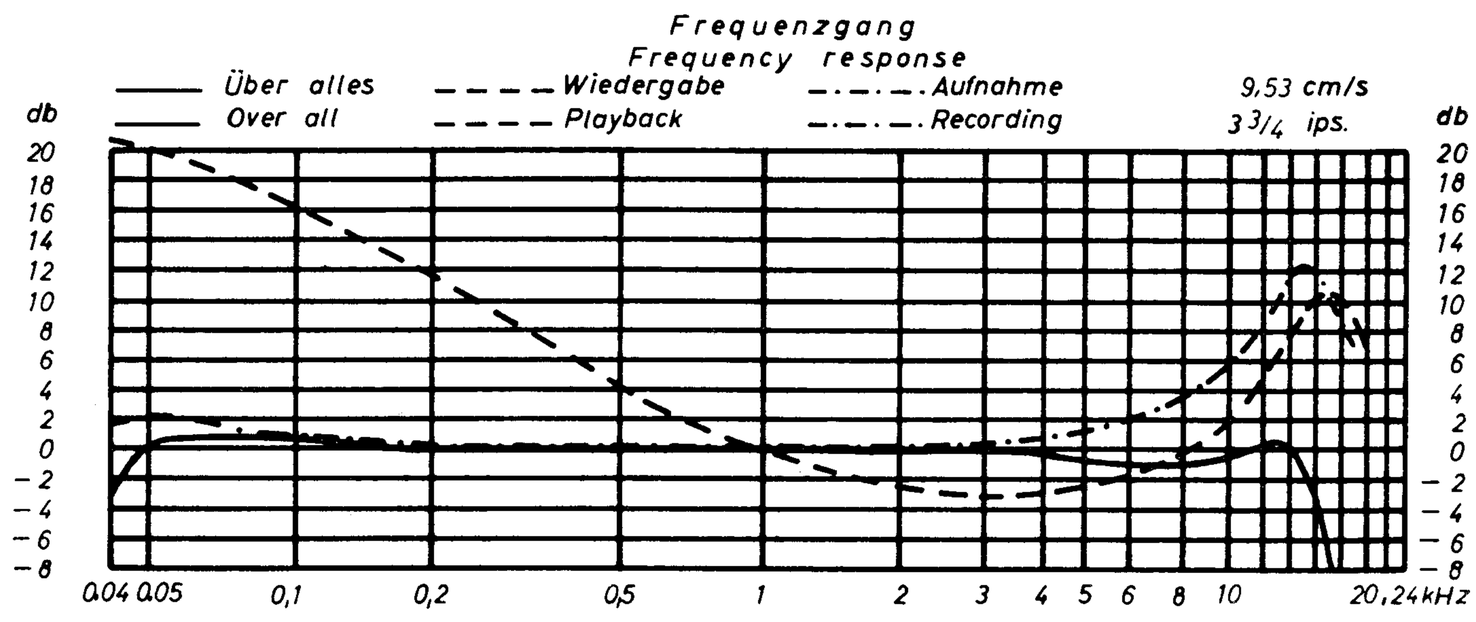

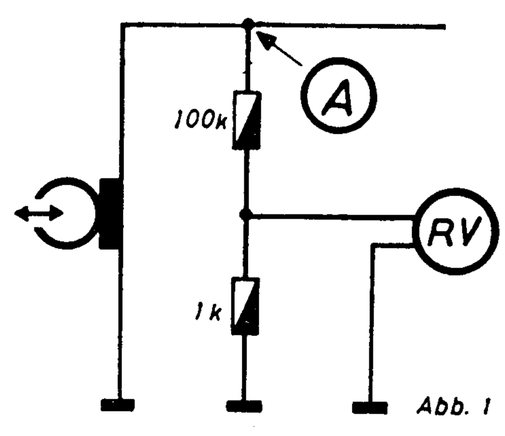

Abb. 1

Fig 1

Reglereinstellung

R 24 Regelautomatik. Einstellen: Tongenerator an die Kontakte 1 und 2 der Buchse ⅄ Ω anschließen und 10 mV/1000 Hz einspeisen.

NF-Röhrenvoltmeter an den Meßpunkt B (siehe Schaltbild) anschließen. Tasten „Automatik", „Aufnahme" und „Start" drücken. R 24 so einstellen, daß Röhrenvoltmeter eine Spannung von 3 V anzeigt. Anschließend Regelautomatik prüfen.

Prüfen: Zur Prüfung der Regelautomatik wird bei der oben beschriebenen Meßanordnung die Eingangsspannung von 10 mV auf 100 mV (20 db) verändert. Die Abweichung an der Anzeige des Röhrenvoltmeters darf dann max. +5 db betragen. Beim Zurückschalten von 100 mV auf 10 mV beträgt die Regelzeitkonstante ca. 3,5 Minuten, d. h. die Ausgangsspannung von 3 V wird erst ca. 3,5 Minuten nach dem Zurückschalten erreicht.

R 29 Aussteuerungsanzeige (R 29 befindet sich neben dem Tonkopf): Tongenerator an die Kontakte 1 und 2 der Buchse ⅄ Ω anschließen und ca. 10 mV/1000 Hz einspeisen.

Am Meßpunkt B (siehe Schaltbild) NF-Röhrenvoltmeter anschließen. Tasten „Aufnahme" und „Start" drücken. Automatik ausschalten. Regler „Pegel" so einstellen, daß das Röhrenvoltmeter eine Niederfrequenzspannung von 4 V anzeigt.

R 29 ist dann so abzugleichen, daß der Zeiger des Aussteuerungsinstruments genau vor Eintritt in das rote Feld stehen bleibt.

R 50 HF-Vormagnetisierung: Die HF-Vormagnetisierung beeinflußt den Frequenzgang des Gerätes. Die unten angegebene Spannung ist ein Mittelwert, die endgültige Einstellung erfolgt nach der Kontrolle des Frequenzganges. NF-Röhrenvoltmeter im Punkt A gemäß Abb. 1 über einen Spannungsteiler (100 kΩ + 1 kΩ) anschließen. Tasten „Aufnahme" und „Start" drücken.

Mit R 50 wird am Röhrenvoltmeter eine Spannung von 350 mV eingestellt.

R 42 Arbeitspunkt der Gegentaktendstufe: Milliamperemeter (Meßbereich 15 mA, Ri = 20 Ohm) im Punkt C (siehe Schaltbild) anschließen. Taste „Start" drücken, Regler „Pegel" auf 0 stellen. Mit R 42 einen Strom von 7,0 mA einstellen.

Abschwenken des Verstärkers (siehe Abb. 2), Bodenplatte abschrauben, Schraube E entfernen, Stift F ausrasten, Verstärker abschwenken.

Umstellen auf 60-Hz-Betrieb: Zur Umstellung auf 60 Hz bzw. 50 Hz ist die Motorrolle auszuwechseln.

Adjustment of Variable Resistors

R 24 Automatic Recording Level Control. Adjustment as follows: Connect a—f oscillator across contacts 1 and 2 of socket ⅄ Ω and apply a signal of 1000 cps. at 10 millivolts. Connect a—f vacuum tube voltmeter to measuring terminal B (see circuit diagram). Press AUTOMATIC, RECORD and START keys. Adjust R 24 so that the VTVM gives a reading of 3 volts.

Now check functioning of automatic recording level controls as follows:

Switch input voltage from 10 millivolts to 100 millivolts (20 decibels). The reading of the tube voltmeter must not deviate by more than +5 decibels. On switching back from 100 to 10 millivolts, the ALC time constant will be approx. 3.5 minutes, i.e. the output voltage will not reach 3 volts until 3.5 minutes after switching back to 10 millivolts.

R 29 Recording Level Indicator (R 29 located next to recording head): Connect a—f oscillator across contacts 1 and 2 of socket ⅄ Ω and apply a signal of 1000 cps. at approx. 10 millivolts. Connect a—f VTVM to measuring terminal B (see circuit diagram). Press RECORD and START keys. Switch off ALC. Adjust the control LEVEL so that a—f VTVM reads 4 volts. Now readjust R 29 until the pointer of the VU meter stops exactly before entering the red band of the scale.

R 50 R-F Bias: The frequency response of the recorder depends on the r-f bias. The voltage level stated below is an average value only; check frequency response before making final adjustment of bias. Connect a—f VTVM to terminal A by way of a voltage divider (100 kiloohms + 1 kiloohm) as indicated in Fig. 1. Press RECORD and START keys.

Adjust R 50 until tube voltmeter reads 350 millivolts.

R 42 Push-Pull Output Stage: Connect milliamperemeter (measuring range 15 milliamperes, internal resistance 20 ohms) to terminal C (see circuit diagram). Press START key and adjust rheostat LEVEL to zero. Adjust R 42 so that a current of 7 milliamperes flows.

To swing out amplifier (see Fig. 2): screw off bottom plate and remove screw E; disengage stud F; swing out amplifier.

Adaptation to 60-cps. mains: To adapt to a 60-cps. or 50-cps. mains, change motor pulley.

Ajustage des résistances réglables

R 24 Réglage automatique du niveau d'enregistrement. Ajustage: Raccorder un générateur BF aux bornes 1 et 2 de la prise ⅄ Ω et injecter un signal de 1000 Hz et 10 mV.

Brancher un voltmètre électronique BF sur la prise de mesure B (voir schéma de circuit). Enfoncer les touches «Automatic», «Enregistrement» et «Start». Ajuster la résistance R 24 de telle façon, que le voltmètre électronique indique une tension de 3 V. Vérifier ensuite le réglage automatique du niveau d'enregistrement.

Contrôle: Pour le contrôle du réglage automatique du niveau d'enregistrement, modifier la tension d'entrée de 10 mV sur 100 mV (20 dB) dans le montage de mesure décrit ci-dessus. L'indication du voltmètre électronique ne doit alors pas subir une déviation supérieure à +5 dB. Lorsque la tension d'entrée est ramenée de 100 mV sur 10 mV, la constante de temps doit être de 3,5 minutes environ, c'est-à-dire que la tension de sortie de 3 V doit être atteinte approximativement 3,5 minutes après le retour de la tension d'entrée sur sa valeur initiale.

R 29 Modulomètre (la résistance R 29 se trouve à côté de la tête magnétique): Raccorder un générateur BF aux bornes 1 et 2 de la prise ⅄ Ω et injector un signal d'environ 1000 Hz et 10 mV. Brancher un voltmètre électronique BF sur la prise de mesure B (voir schéma de circuit). Enfoncer les touches «Enregistrement» et «Start». Déconnector le réglage automatique du niveau d'enregistrement. Ajuster le régleur «Niveau» de telle façon que le voltmètre électronique indique une tension BF de 4 V.

Ajuster la résistance R 29 de manière que l'aiguille du modulomètre s'immobilise exactement à la limite de la plage rouge.

R 50 Prémagnétisation HF: La prémagnétisation HF exerce une influence sur la résponse en fréquence du magnétophone. La tension mentionnée ci-dessous représente une valeur moyenne. Le réglage définitif s'opère après le contrôle de la réponse en fréquence. Brancher un voltmètre électronique BF sur la prise de mesure A (selon Fig. 1), par l'intermédiaire d'un diviseur de tension (100 kΩ + 1 kΩ). Enfoncer les touches «Enregistrement» et «Start».

A l'aide de la résistance R 50, ajuster une tension de 350 mV sur le voltmètre électronique.

R 42 Point de fonctionnement de l'étage en push-pull: Raccorder un milliampèremètre (plage de mesure 15 mA; impédance 20 ohms) sur la prise de mesure C (voir schéma de circuit). Enfoncer la touche «Start» et amener le régleur «Niveau» dans sa position zéro. A l'aide de la résistance R 42, ajuster un courant de 7,0 mA.

Renversement de l'amplificateur (voir Fig. 2): Pour renverser l'amplificateur, dévisser la plaque de fond, retirer la vis E et dégager la cheville F.

Adaptation sur une fréquence du secteur de 60 Hz: L'adaptation du magnétophone sur une fréquence du secteur de 60 Hz ou de 50 Hz requiert l'échange de la poulie du moteur.

Ajuste del regulador

R 24 Sistema de regulación automática. Ajuste: Conectar el generador de audio a los contacts 1 y 2 del jack ⅄ ⌀ aplicar una señal de 10 mV/1000 c/s. Conectar en el punto de medición B (véase esquema) el voltímetro a válvula de baja frecuencia. Oprimir las teclas «automático», «registro» y «marcha». Ajustar R 24 de modo que el voltímetro indique una tensión de 3 V. A continuación comprobar el funcionamiento del sistema automático.

Combrobación: Para comprobar el sistema de regulación automática se mantiene la disposición de conexiones descrita, y se eleva la tensión de entrada de 10 mV a 100 mV (20 db). La diferencia de lectura del voltímetro puede ser entonces de +5 db, como máximo. Al conmutar nuevamente de 100 mV a 10 mV, la constante del tiempo de regulación es de aprox. 3,5 minutos, es decir, la tension inicial de 3 V sólo se alcanza al cabo de 3,5 minutos, aproximadamente, después de la conmutación.

R 29 Indicador de modulación (R 29 se encuentra el lado de la cabeza grabadora): Conectar el generador de audio a los contactos 1 y 2 del jack ⅄ ⌀ y aplicar una señal de 10 mV/1000 c/s.

Conectar en el punto de medición B (véase esquema) el voltímetro a válvula de baja frecuencia. Oprimir las teclas «registro» y «marcha». Desconectar el sistema automático. Ajustar el regulador de nivel de registro de tal modo que el voltímetro indique una tensión audiofrecuente de 4 V.

R 29 debe entonces compensarse de tal manera que la aguja del instrumento medidor de modulación se pare exactamente antes de entrar en el campo rojo.

R 50 Premagnetización de alta frecuencia: La premagnetización de alta frecuencia influye en la respuesta de frecuencia del aparato. La tensión abajo indicada es un valor medio, ya que el ajuste definitivo se realiza después de comprobar la respuesta de frecuencia. Conectar el voltímetro a válvula de baja frecuencia en el punto A (véase fig. 1) a través de un divisor de tensión (100 kΩ + 1 kΩ). Oprimir las teclas «registro» y «marcha».

Con R 50 se ajusta una tensión de 350 mV en el voltímetro.

R 42 Punto de funcionamiento de la etapa final en push-pull: Conectar el miliamperímetro (margen de medición 15 mA, resistencia interna = 20 ohmios) en el punto C (véase esquema). Oprimir la tecla «marcha», situar el regulador de nivel en 0. Ajustar con R 42 una corriente de 7,0 mA.

Apartar el amplificador (véase fig. 2), destornillar la placa de base, quitar el tornillo E, desenganchar el perno F, apartar el amplificador.

Adaptación a corriente de 60 c/s: Para adaptar el aparato a corriente de 60 c/s o de 50 c/s respectivamente, hay que cambiar la polea del motor.

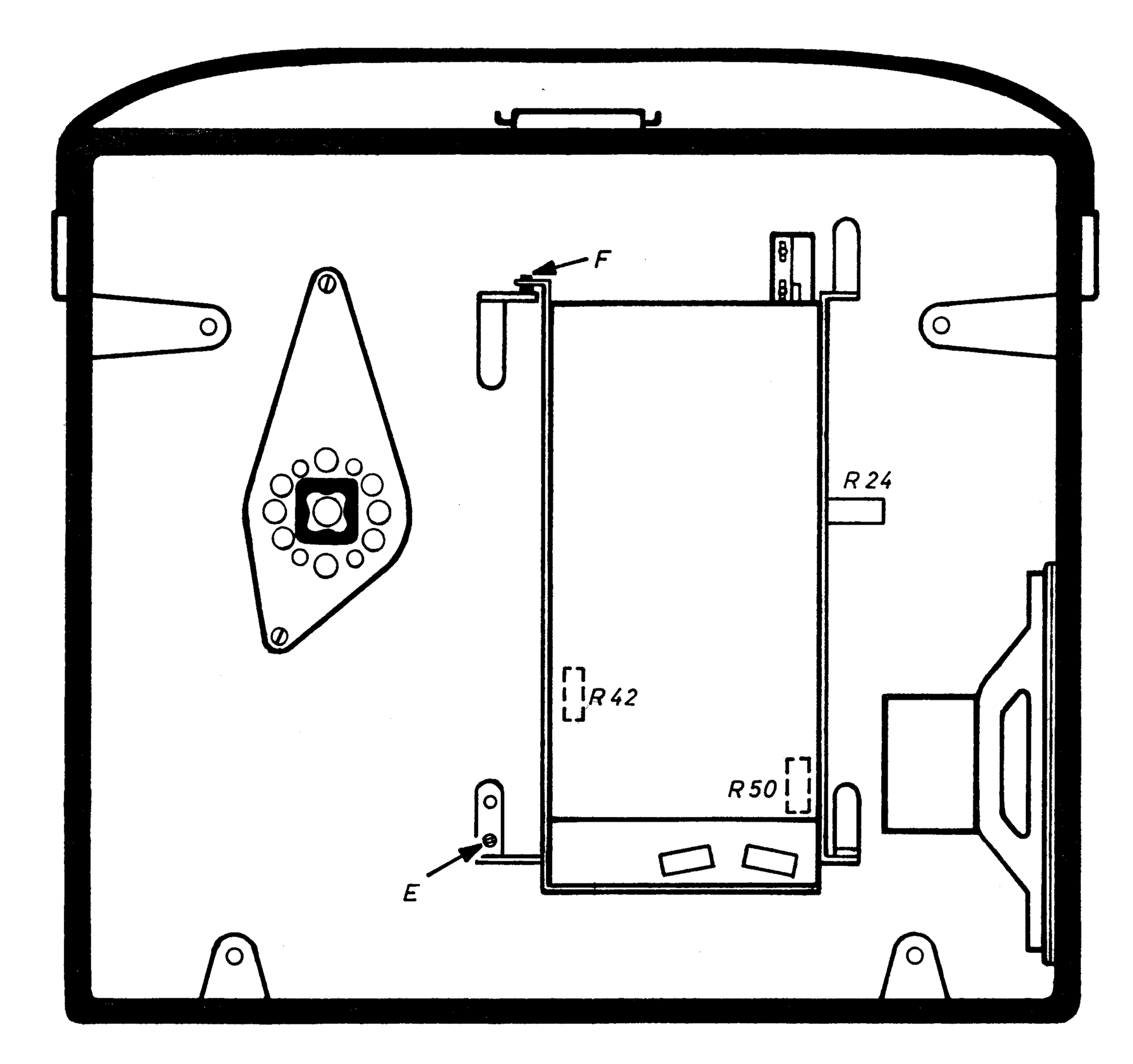

Abb. 2
Fig. 2

Aufnahme — Wiedergabe

Alle Spannungen mit Röhrenvoltmeter (Ri = 10MΩ) gemessen. Gezeichnete Stellung „Wiedergabe".

Recording — Playback

Voltage measurments taken with VTVM (impedance 10meg). Switches shown in "Playback" position.

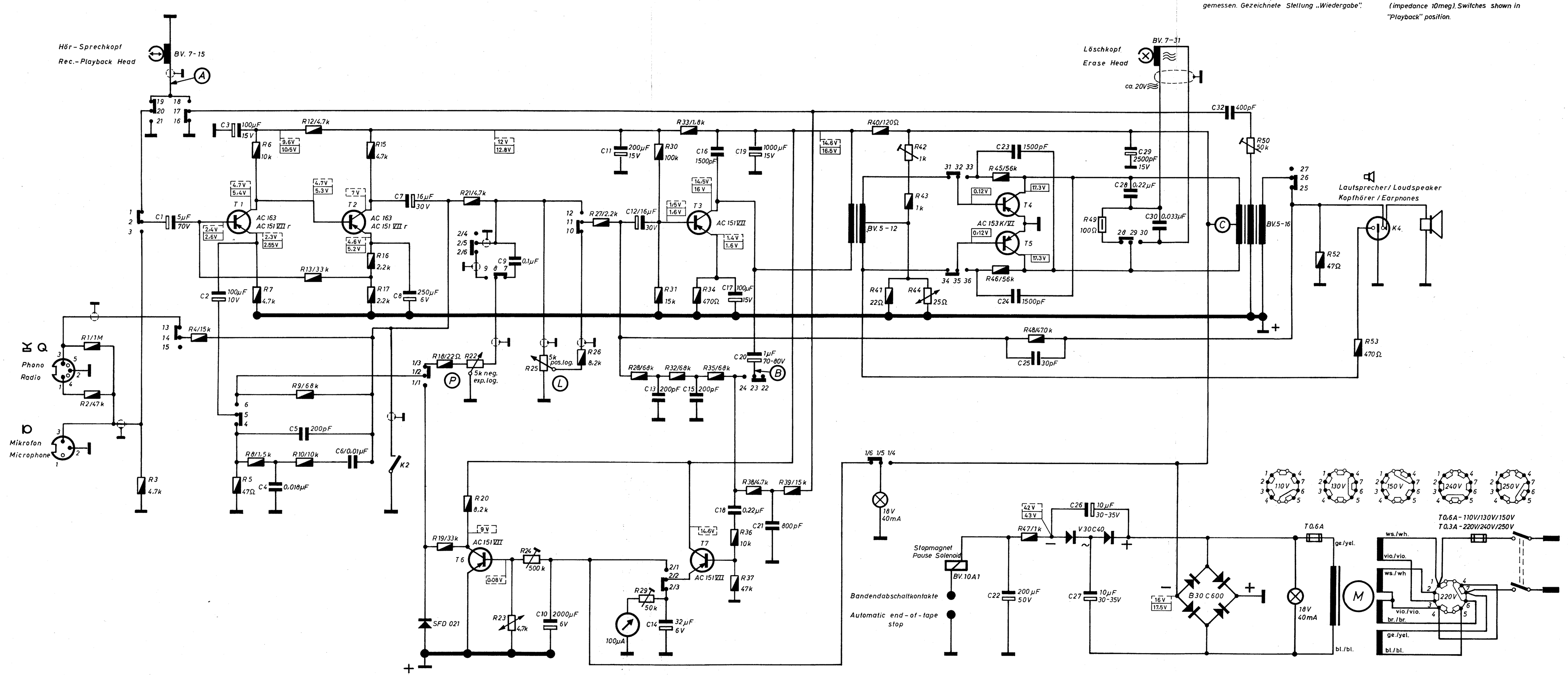

R	1 2	3	4	5	6 7 8	9 12 10 13	15 16 17	18 19	20 21 22	23	24 25	26	27	28 29 30 31	32,33,34	35	36 37	38	39	40,41	42 43	44	45 46	47,48	49	50	52	53	R
C		1	2	3	4	5	6	7 8		9	10		11	12	13,14	15	16	17 18	19 20 21					22 23 24	25	26 27	28 29	30	32	C
Kontakte / Contacts		1,2,3,19,20,21	16,17,18 13,14,15	4,5,6				K2	1/1,1/2,1/3	2/4,2/5,2/6,7,8,9		10,11,12			2/1,2/2,2/3			22,23,24		1/4,1/5,1/6		31,32,33 34,35,36			28,29,30		25,26,27		K4	Kontakte / Contacts

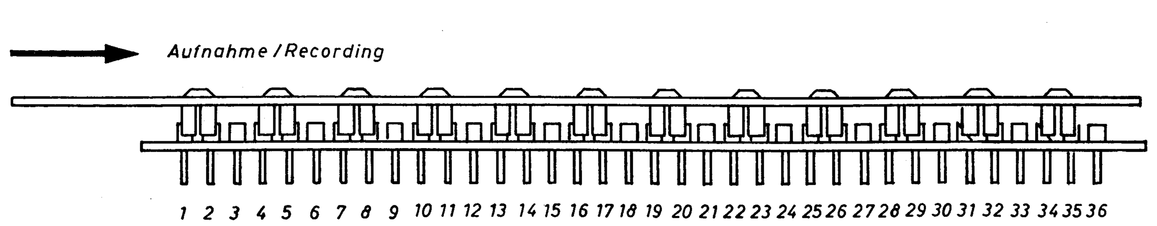

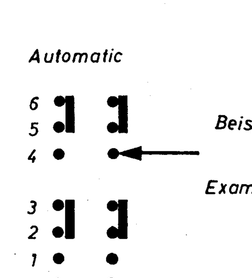

(P) Pegelregler, Tonblende / Level, Tone Control

(L) Lautstärke / Volume Control

1/3 W

1/2 W

Elko

Kondensator

Transistor

B E C

UHER **TYP 711 AUTOMATIC**

Stromlaufplan

Gültig ab Gerät Nr.: 215001

Änderungen vorbehalten!

Circuit Diagram

Valid from ser. no.: 215001

Alterations reserved!

Anhang zur Service-Anleitung 702, 704, 711 Automatic und 722/723 für den Typ 724 L Stereo

Die in der Service-Anleitung gemachten Angaben gelten uneingeschränkt für die Absätze:

3. Bremsen
4. Bandtransport
7. Auswechseln des Reibrades
9. Automatische Bandendabschaltung
10. Bandführung
11. Tonkopf
12. Schmierung und Wartung

Es entfällt der Absatz:

8. Auswechseln des Riemens zwischen Motorrolle und Schwungmasse.

Sinngemäß gelten die Angaben bis auf folgende Abweichungen auch für die Absätze:

1. Antrieb
   Für den Antrieb gilt die Abbildung 2. Das Zählwerk ist vierstellig.
2. Kupplungen
   2.1 Prüfen der Kupplungen
   Der Absatz gilt bis auf das Justieren der Blattfeder. Die Blattfeder soll nicht justiert, sondern ausgetauscht werden.
5. Schneller Vor- und Rücklauf
   Der Absatz gilt bis auf den Andruck des rechten Friktionsrades (C) an das linke Friktionsrad (B), welcher 100 g ± 10 g betragen muß. Der in Abb. 10 eingetragene Wert gilt also beim Typ 724 L Stereo nicht.
6. Geschwindigkeitswähler
   Der Absatz gilt bis auf den Abstand der Unterkanten des Reibrades und der Schwungmassenlauffläche, die bei der Geschwindigkeit 19 cm/s miteinander abschließen müssen.

Supplement to the Service Manual for Models 702, 704, 711 Automatic, 722 and 723. Valid for Model 724 L Stereo

The information given in the following paragraphs of the Service Manual is valid without any exception:

3. Brakes
4. Tape Transport
7. Replacing the Speed Selector Idler
9. Automatic End-of-Tape Stop
10. Tape Guides
11. Sound Head
12. Lubrication and Maintenance

Paragraph:

8. Replacing the Belt Between the Motor Pulley and the Flywheel does not apply.

The paragraphs listed below are valid with the following exceptions and modifications:

1. Transport Mechanism
   For the transport mechanism refer to Fig. 2. The counter is of the 4-digit type.
2. Clutches
   2.1 Checking the Clutches
   This paragraph is valid except for the adjustment of the flat spring in that the flat spring must not be adjusted but replaced.
5. Fast Forward and Rewind
   This paragraph is valid except for the pressure between the right-hand friction wheel (C) and the left-hand friction wheel (B). The pressure must be 100 grams ± 10 grams (approximately 4 ± 0.4 oz.). Thus, the value given in Fig. 10 does not apply to Model 724 L Stereo.
6. Speed Selector
   This paragraph is valid except for the clearance between the lower edges of the speed selector idler and the tread of the flywheel. They must be flush at the tape speed of 7 1/2 ips.

Annexe aux instructions de service 702, 704, 711 Automatic et 722/723 pour le modèle 724 L Stereo

Les données des instructions de service «702, 704, 711 Automatic et 722/723» sont valables sans aucune exception pour les paragraphes suivants:

3. Freins
4. Transport de la bande
7. Echange de la roue à friction
9. Arrêt automatique en fin de bande
10. Guide-bande
11. Tête magnétique
12. Lubrification et entretien

Le paragraphe:

8. «Echange de la courroie entre la poulie du moteur et le volant» est supprimé.

Tous les autres paragraphes sont valables, à l'exception des divergences suivantes:

1. Mécanisme d'entraînement
   L'entraînement est représenté par la figure 2. Le compteur comporte quatre positions.
2. Embrayages
   2.1 Contrôle des embrayages
   Le paragraphe est valable, sauf en ce qui concerne l'ajustage du ressort-lame. Ce dernier ne doit pas être cambré, mais échangé.
5. Défilement accéléré en avant et en arrière
   Le paragraphe peut être repris intégralement. La force de pression de la roue à friction droite (C) sur la roue à friction gauche (B) est toutefois de 100 g ± 10 g. La donnée numérique inscrite dans la figure 10 ne se rapporte donc pas au modèle 724 L Stereo.
6. Sélecteur de vitesses
   Le paragraphe est valable, sauf en ce qui concerne l'écart existant entre l'arête inférieure de la roue à friction et la surface de roulement du volant qui, à la vitesse de défilement de 19 cm/s doivent se trouver au même niveau.

Apéndice a las Instrucciones de Servicio 702, 704, 711 Automatic y 722/723 para el tipo 724 L Stereo

Las indicaciones que figuran en las Instrucciones de Servicio, valen sin ninguna clase de reservas en sus párrafos:

3. Frenos
4. Transporte de la cinta
7. Recambio de la rueda de fricción
9. Desconexión automática con los extremos de la cinta
10. Conducción de la cinta
11. Cabeza de sonido
12. Engrase y mantenimiento

Se suprimirá el párrafo:

8. Recambio de la correa de transmisión entre el rodillo motor y el volante.

Análogamente, excepción hecha de los párrafos que se citen a continuación, se considerarán como válidas las indicaciones de los apartados:

1. Propulsión
   En cuanto a la propulsión, consúltese fig. 2. El contador es de cuatro dígitos.
2. Embragues
   2.1 Revisión de los embragues
   Vale el contenido de este apartado, menos lo que se dice sobre el ajuste del muelle de lámina. No se debe ajustar, sino substituir el muelle de lámina.
5. Avance y retroceso rápidos
   Este apartado es válido, a excepción de la presión que ejerce la rueda de fricción derecha (C) sobre la rueda de fricción izquierda (B), ya que debe ascender a 100 grs ± 10 grs. El valor inscrito en fig. 10, por lo tanto, no vale para el tipo 724 L Stereo.
6. Selector de velocidades
   Lo que se dice en este apartado se mantiene, menos lo indicado sobre la distancia entre el borde inferior de la rueda de fricción y la superficie rodante del volante, ya que los dos bordes, a la velocidad de 19 cm./seg., deben coincidir exactamente.

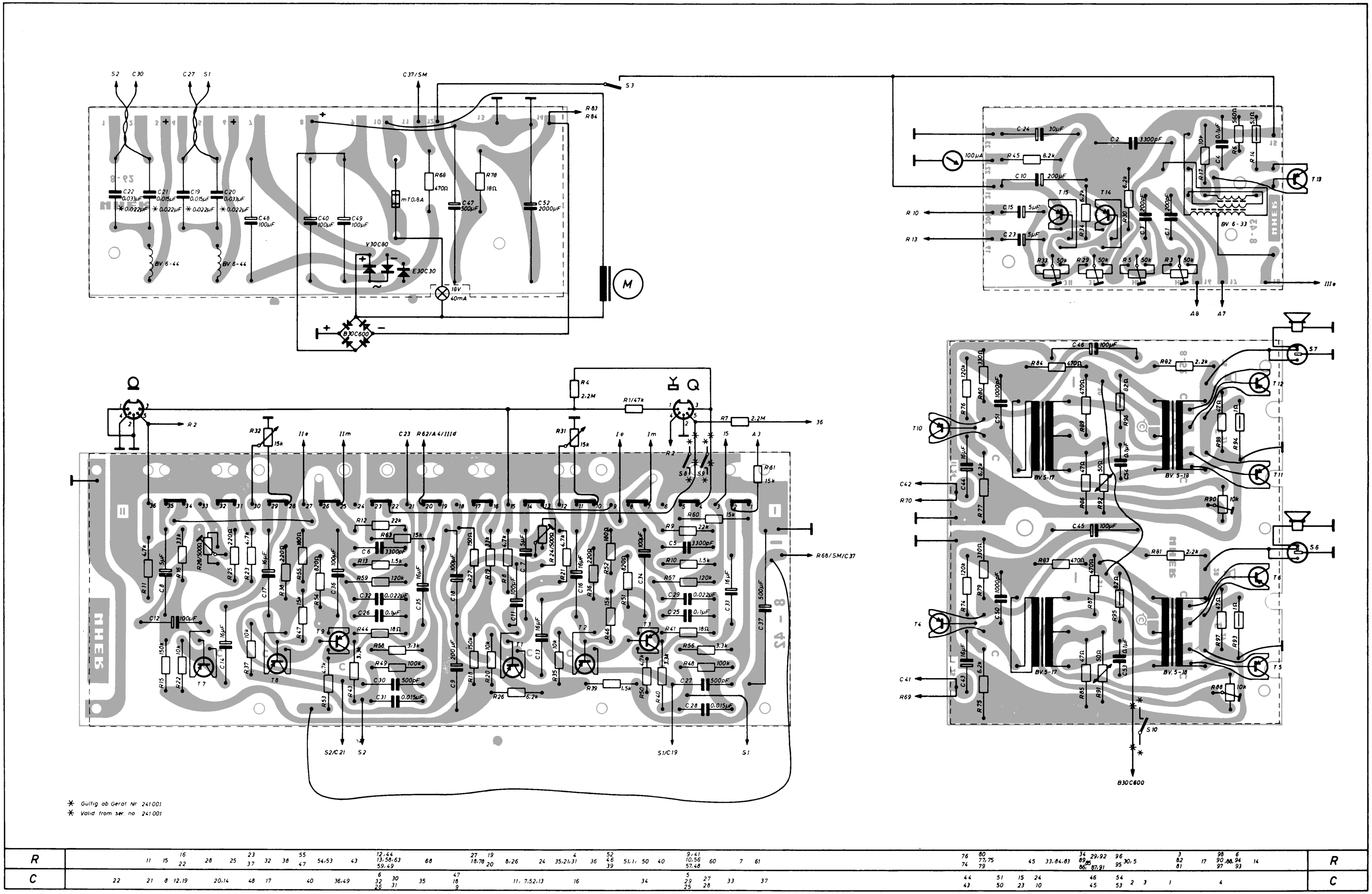

✱ Gültig ab Gerät Nr 241001
✱ Valid from ser. no 241001

| | | |