OPERATING PROCEDURE FOR UNIVOX "MICRO-FAZER"

1. Install 9 volt battery (transistor radio type), into unit by removing four screws located on bottom of unit.
   Carefully remove bottom plate and install fresh battery into provided terminal plug assembly. Replace bottom plate and screws; unit is ready for operation.

2. Connect audio cable from jack marked "output" (#1) to input of your amplifier.

3. Connect audio cable from your instrument to jack marked "input" (#2) on unit.

4. Activate on/off switch (#3) for phase effect to operate and adjust "Rate" control (#4) for desired speed.

5. NOTE : MAKE CERTAIN UNIT IS UNPLUGGED WHEN NOT IN USE, IN ORDER TO CONSERVE BATTERY LIFE.

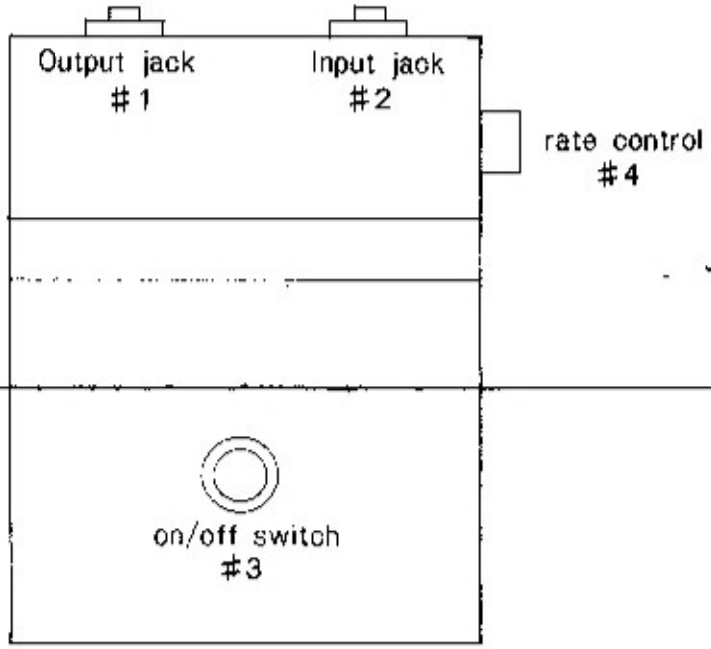

SCHEMATIC DIAGRAM

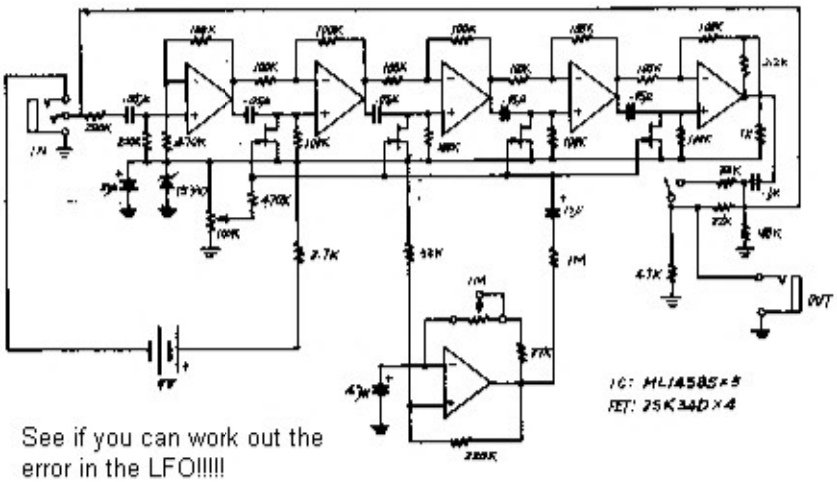

See if you can work out the error in the LFO!!!!!

CAUTION: ALLOW AT LEAST 30 SECONDS FOR CAPACITORS TO CHARGE BEFORE USE.

Printed in Japan