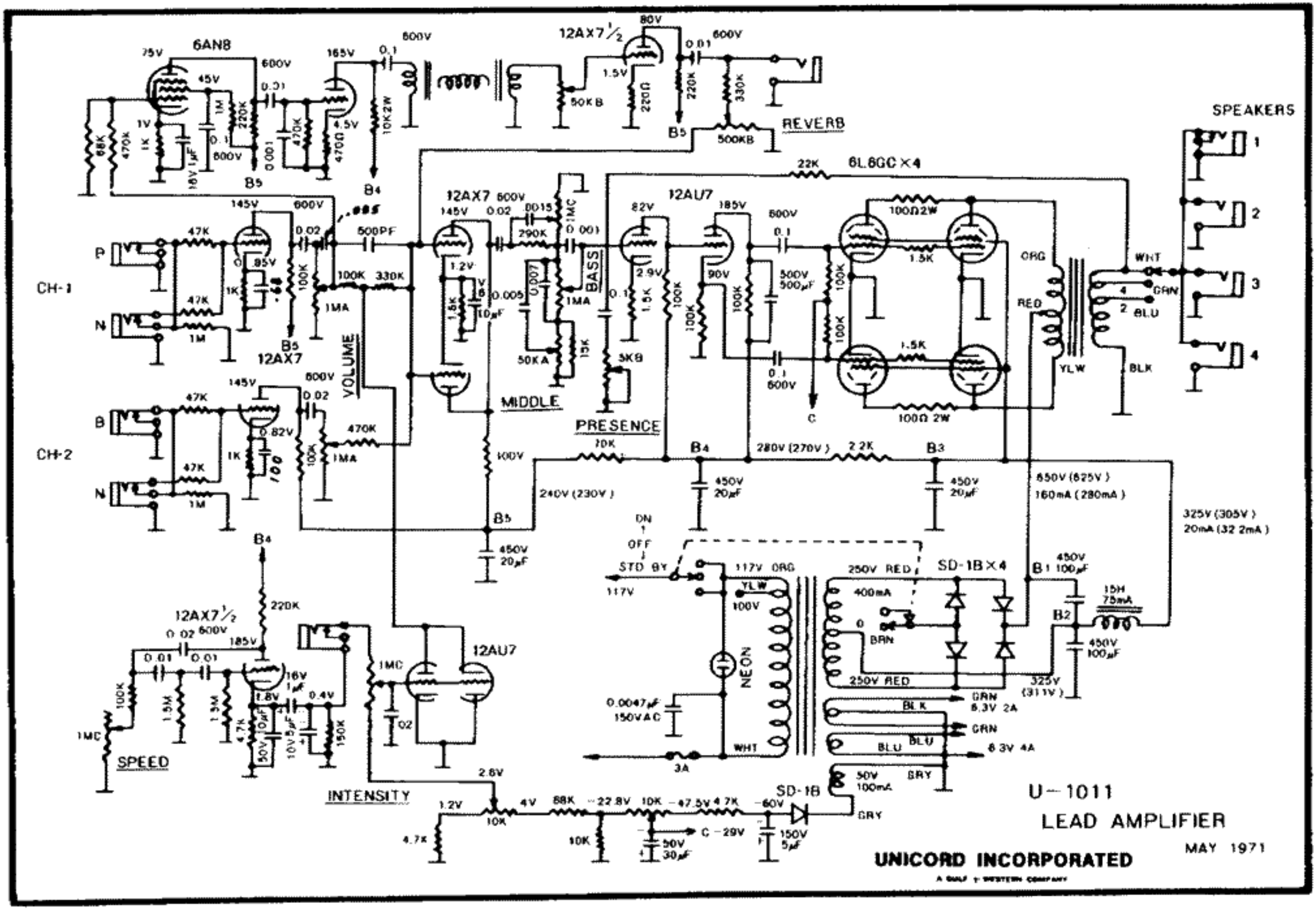
6AN8
12AX7
12AX7 1/2
12AU7
6L6GC X4
SD-1B X4
SD-1B
SPEAKERS
REVERB
VOLUME
BASS
MIDDLE
PRESENCE
SPEED
INTENSITY
CH-1
CH-2
NEON
U-1011
LEAD AMPLIFIER
MAY 1971
UNICORD INCORPORATED