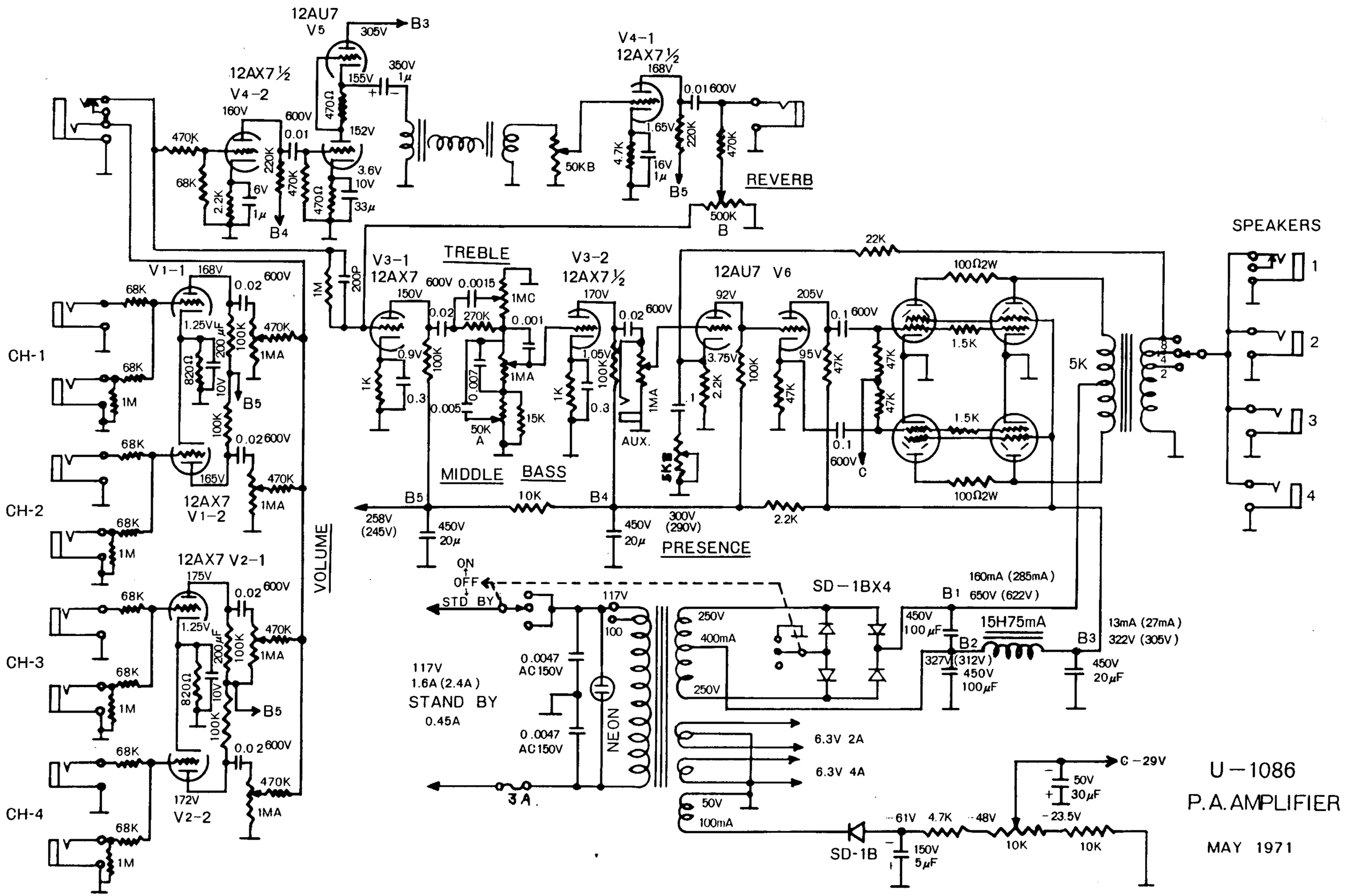
12AU7
V5
305V
B3
350V
1μ
155V
470Ω
152V
12AX7½
V4-2
160V
600V
0.01
470K
220K
68K
2.2K
6V
1μ
470K
470Ω
3.6V
10V
33μ
B4
V4-1
12AX7½
168V
0.01 600V
1.65V
220K
470K
4.7K
16V
1μ
B5
REVERB
50KB
500K
B
SPEAKERS
1
2
3
4
22K
100Ω2W
1.5K
5K
8
4
2
V1-1
168V
0.02
600V
68K
1.25V
200μ
100K
470K
1MA
820Ω
10V
B5
1M
CH-1
CH-2
CH-3
CH-4
165V
12AX7
V1-2
172V
V2-2
12AX7 V2-1
175V
VOLUME
1M
200P
V3-1
12AX7
150V
600V
0.0015
1MC
0.02
270K
0.001
0.9V
100K
1K
0.3
0.007
1MA
0.005
50K
A
15K
TREBLE
MIDDLE
BASS
V3-2
12AX7½
170V
0.02
600V
1.05V
100K
1K
0.3
1MA
AUX.
5KB
12AU7 V6
92V
205V
3.75V
2.2K
100K
95V
47K
0.1
600V
C
.1
B5
258V
(245V)
10K
B4
450V
20μ
300V
(290V)
2.2K
PRESENCE
ON
OFF
STD BY
117V
100
0.0047
AC150V
NEON
117V
1.6A (2.4A)
STAND BY
0.45A
3A.
SD-1BX4
250V
400mA
250V
450V
100μF
B1
160mA (285mA)
650V (622V)
15H75mA
B2
327V (312V)
450V
100μF
B3
13mA (27mA)
322V (305V)
450V
20μF
6.3V 2A
6.3V 4A
50V
100mA
C -29V
50V
30μF
-23.5V
-61V
4.7K
-48V
10K
10K
SD-1B
150V
5μF
U-1086
P.A. AMPLIFIER
MAY 1971
UNICORD INCORPORATED
A GULF + WESTERN COMPANY